भारत की राष्ट्रीय भवन निर्माण संहिता 2016

खण्ड 1

NATIONAL BUILDING CODE OF INDIA 2016

VOLUME 1

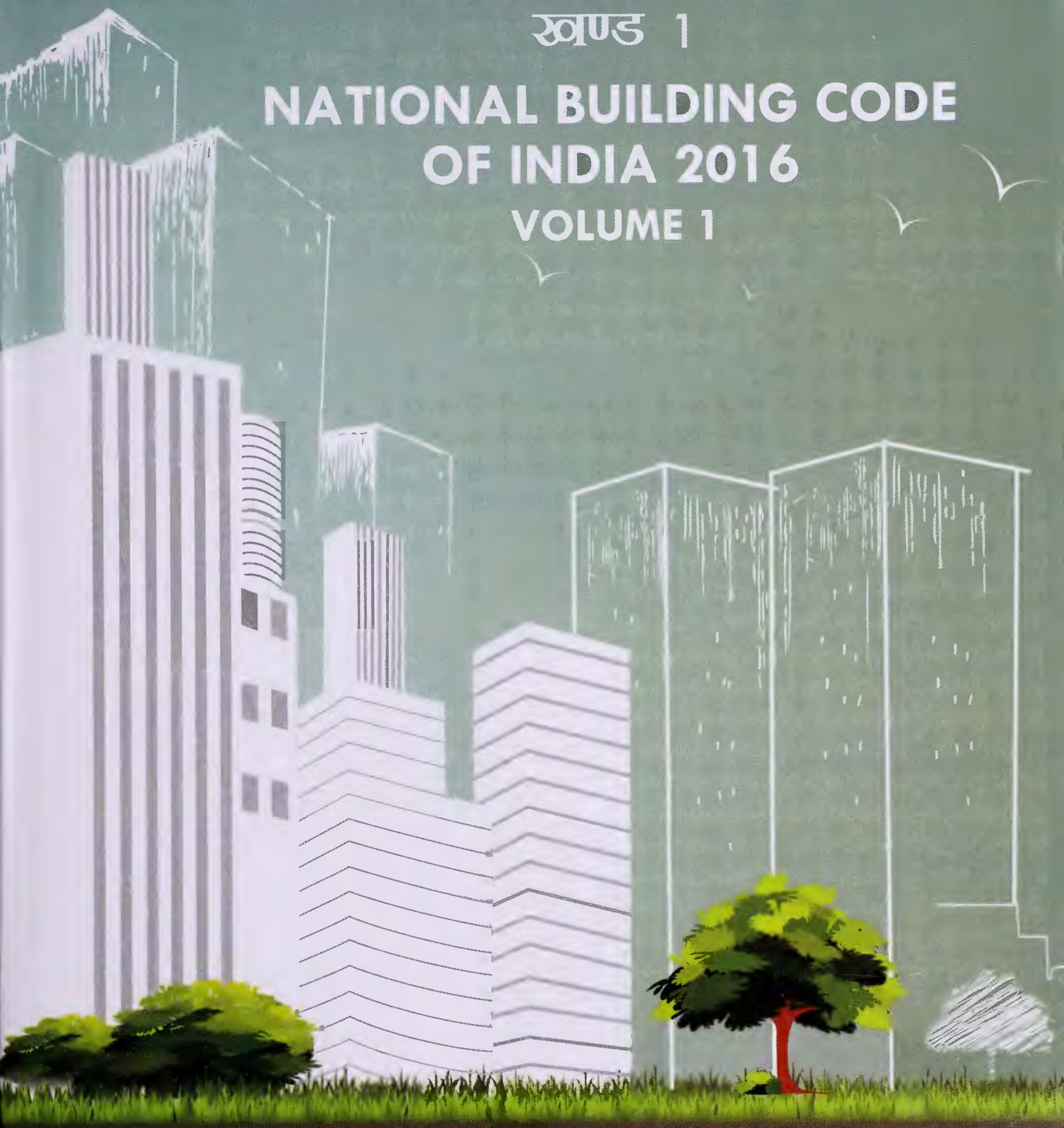

भारतीय मानक ब्यूरो

BUREAU OF INDIAN STANDARDS

About the book.....

With the objective of finding out areas of economies in construction costs, the Planning Commission had set up a Panel of Experts in 1965 to study in depth the whole gamut of construction activities. The outlay on construction works and particularly on building forms a very large portion of the national investment. One of the facets of building construction, namely, controlling and regulating buildings through municipal byelaws and departmental handbooks received the attention of the Panel and a study of these regulatory practices revealed that some of the prevailing methods of construction were outmoded; some designs were overburdened with safety factors and there were other design criteria which, in the light of newer techniques and methodologies, could be rationalized; and building byelaws and regulations of municipal bodies which largely regulate the building activity in the country wherever they exist, were outdated. They did not cater to the use of new building materials and the latest developments in building designs and construction techniques. It also became clear that these codes and byelaws lacked uniformity and they were more often than not 'specification oriented' and not 'performance oriented' thereby hindering the use of modern techniques and also restricting the creative faculties of architects, engineers and structural engineers.

The studies of the Panel led to the conclusion that a unified building code at the national level should be formulated reflecting the latest trends in building construction activity. At the suggestion of the Planning Commission, this task was taken up by the then Indian Standards Institution (now Bureau of Indian Standards), and its Guiding Committee finalized the Code to serve as guide to all governmental and private agencies controlling building activities. In preparing the Code expertise was drawn upon from all over the country - the central and state governments, local bodies, professional institutions and private agencies.

(Continued on flap 2)

PRICE ₹ 13,760.00
(Vol. 1 & 2)

Digitized by the Internet Archive
in 2017 with funding from
Public.Resource.Org

https://archive.org/details/nationalbuilding01

भारत की राष्ट्रीय भवन निर्माण संहिता 2016

खण्ड 1

NATIONAL BUILDING CODE OF INDIA 2016

VOLUME 1

भारतीय मानक ब्यूरो
BUREAU OF INDIAN STANDARDS

SP 7 : 2016

FIRST PUBLISHED 1970
FIRST REVISION 1983
SECOND REVISION 2005
THIRD REVISION 2016

© BUREAU OF INDIAN STANDARDS

ICS 01.120; 91.040.01

PRICE ₹ 13,760.00
(Vol. 1 & 2)

PUBLISHED BY BUREAU OF INDIAN STANDARDS, MANAK BHAVAN, 9 BAHADUR SHAH ZAFAR MARG, NEW DELHI 110002; TYPESET AT SUNSHINE GRAPHICS, 263, TELIWARA, SHAHDARA, DELHI 110032; PRINTED AT J. J. OFFSET PRINTERS, A-24, SECTOR 68, NOIDA, GAUTAM BUDH NAGAR, UTTAR PRADESH (INDIA).

CONTENTS

Volume 1

Foreword		...	(v)
Committee Composition		...	(ix)
Important Explanatory Note for Users of the Code		...	(xxx)
Information for the Users about Availability of the Code in Groups		...	(xxxi)
			Total Pages
Part 0	Integrated Approach — Prerequisite for Applying Provisions of the Code	...	12
Part 1	Definitions	...	28
Part 2	Administration	...	32
Part 3	Development Control Rules and General Building Requirements	...	150
Part 4	Fire and Life Safety	...	116
Part 5	Building Materials	...	46
Part 6	Structural Design		
	Section 1 Loads, Forces and Effects	...	134
	Section 2 Soils and Foundations	...	60
	Section 3 Timber and Bamboo		
	3A Timber	...	56
	3B Bamboo	...	30
	Section 4 Masonry	...	86
	Section 5 Concrete		
	5A Plain and Reinforced Concrete	...	118
	5B Prestressed Concrete	...	52
	Section 6 Steel	...	138
	Section 7 Prefabrication, Systems Building and Mixed/Composite Construction		
	7A Prefabricated Concrete	...	42
	7B Systems Building and Mixed/Composite Construction	...	12
	Section 8 Glass and Glazing	...	80

Volume 2

Important Explanatory Note for Users of the Code		...	(iv)
Information for the Users about Availability of the Code in Groups		...	(v)
			Total Pages
Part 7	Construction Management, Practices and Safety	...	76
Part 8	Building Services		
	Section 1 Lighting and Natural Ventilation	...	56
	Section 2 Electrical and Allied Installations	...	172
	Section 3 Air Conditioning, Heating and Mechanical Ventilation	...	86
	Section 4 Acoustics, Sound Insulation and Noise Control	...	46
	Section 5 Installation of Lifts, Escalators and Moving Walks		
	5A Lifts	...	96
	5B Escalators and Moving Walks	...	44
	Section 6 Information and Communication Enabled Installations	...	28
Part 9	Plumbing Services (Including Solid Waste Management)		
	Section 1 Water Supply	...	44
	Section 2 Drainage and Sanitation	...	82
	Section 3 Solid Waste Management	...	16
	Section 4 Gas Supply	...	18
Part 10	Landscape Development, Signs and Outdoor Display Structures		
	Section 1 Landscape Planning, Design and Development	...	34
	Section 2 Signs and Outdoor Display Structures	...	24
Part 11	Approach to Sustainability	...	98
Part 12	Asset and Facility Management	...	98

FOREWORD

Construction programmes are interwoven in a large measure in all sectors of development, be it housing, transport, industry, irrigation, power, agriculture, education or health. Construction, both public and private, accounts for about fifty percent of the total outlay of the planned expenditure in the country. Half of the total money spent on construction activities is spent on buildings for residential, industrial, commercial, administrative, educational, medical, municipal and entertainment uses. It is estimated that about half of the total outlay on buildings is on housing. It is imperative that for such a large national investment, optimum returns are assured and wastage in construction is avoided.

Soon after the Third Five Year Plan, the Planning Commission decided that the whole gamut of operations involved in construction, such as administrative, organizational, financial and technical aspects, be studied in depth. For this study, a Panel of Experts was appointed in 1965 by the Planning Commission and its recommendations are found in the 'Report on Economies in Construction Costs', published in 1968.

One of the facets of building construction, namely, controlling and regulating buildings through municipal byelaws and departmental handbooks, received the attention of the Panel and a study of these regulatory practices revealed that some of the prevailing methods of construction were outmoded; some designs were overburdened with safety factors and there were other design criteria which, in the light of newer techniques and methodologies, could be rationalized; and building byelaws and regulations of municipal bodies which largely regulate the building activity in the country, wherever they exist, were outdated. They did not cater to the use of new building materials and the latest developments in building designs and construction techniques. It also became clear that these codes and byelaws lacked uniformity and they were more often than not 'specification oriented' and not 'performance oriented'.

These studies resulted in a recommendation that a National Building Code be prepared to unify the building regulations throughout the country for use by government departments, municipal bodies and other construction agencies. The then Indian Standards Institution (now Bureau of Indian Standards) was entrusted by the Planning Commission with the preparation of the National Building Code. For fulfilling this task, a Guiding Committee for the preparation of the Code was set up by the Civil Engineering Division Council of the Indian Standards Institution in 1967. This Committee, in turn, set up 18 specialist panels to prepare the various parts of the Code. The Guiding Committee and its panels were constituted with architects, planners, materials experts, structural, construction, electrical, illumination, air conditioning, acoustics and public health engineers and town planners. These experts were drawn from the Central and State Governments, local bodies, professional institutions and private agencies. The first version of the Code was published in 1970.

After the National Building Code of India was published in 1970, a vigorous implementation drive was launched by the Indian Standards Institution to propagate the contents and use of the Code among all concerned in the field of planning, designing and construction activities. For this, state-wise implementation conferences were organized with the participation of leading engineers, architects, town planners, administrators, building material manufacturers, building and plumbing services installation agencies, contractors, etc.

These conferences were useful in getting across the contents of the Code to the interests concerned. These conferences had also helped in the establishment of Action Committees to look into the actual implementation work carried out by the construction departments, local bodies and other agencies in different states. The main actions taken by the Action Committees were to revise and modernize their existing regulatory media, such as specifications, handbooks, manuals, etc, as well as building byelaws of local bodies like municipalities at city and town levels, *Zilla Parishads*, *Panchayats* and development authorities, so as to bring them in line with the provisions contained in the National Building Code of India. In this process, the Indian Standards Institution rendered considerable support in redrafting process.

The National Building Code of India is a single document in which, like a network, the information contained in various Indian Standards is woven into a pattern of continuity and cogency with the interdependent requirements of Parts/Sections carefully analyzed and fitted in to make the whole document a cogent continuous volume. A continuous thread of 'preplanning' is woven which, in itself, contributes considerably to the economies in construction particularly in building and plumbing services.

The Code contains regulations which can be immediately adopted or enacted for use by various departments, municipal administrations and public bodies. It lays down a set of minimum provisions designed to protect the safety of the public with regard to structural sufficiency, fire hazards and health aspects of buildings; so long as these basic requirements are met, the choice of materials and methods of design and construction are left to the ingenuity of the building professionals. The Code also covers aspects of administrative provisions, development control rules and general building requirements; fire safety requirements; stipulations regarding materials and structural design; rules for design of electrical installations, lighting, air conditioning and heating, installation of lifts; provisions for ventilation, acoustics and plumbing services, such as water supply, drainage, sanitation and gas supply; measures to ensure safety of workers and public during construction; and rules for erection of signs and outdoor display structures. The Code today also covers provisions relating to structural use of glass; escalators and moving walks; information and communications enabled installations; solid waste management; landscape planning and design; and asset and facility management.

Some other important points covered by the Code include 'industrialized systems of building' and 'architectural control'. The increase in population in the years to come will have a serious impact on the housing problem. It has been estimated that the urban population of India will continue to increase with such pace as to maintain the pressure on demand of accommodation for them. Speed of construction is thus of utmost importance and special consideration has to be given to industrialized systems of building. With increased building activity, it is also essential that there should be some architectural control in the development of our cities and towns, if creation of ugliness and slum-like conditions in our urban areas is to be avoided.

Over a period of time, the importance of providing an environment which is conducive to younger and elder persons and the persons with disabilities, alike, has been well highlighted. The Code covers provisions on accessibility to facilitate implementation of this important aspect in all public buildings. Similarly, all building construction and built environment should take into consideration the aspects of sustainable development, which have since been duly provided in a separate chapter in the Code which should be read along with other chapters. The objective is that the building activity should be in complete harmony with the environment be it planning, design, construction or operation and maintenance. With the passage of time, more and more complex buildings including very tall buildings are being built requiring inputs and involvement of professionals from different disciplines, who should work together in harmony following an integrated multi-disciplinary approach since covered in the Code.

Above comprehensive coverage under the Code is the result of its implementation and review from time to time. Since the publication of 1970 version of the National Building Code of India, a large number of comments and useful suggestions for modifications and additions to different parts and sections of the Code were received as a result of use of the Code by all concerned, and revision work of building byelaws of some States. Based on the comments and suggestions received, the National Building Code of India 1970 was first revised in 1983 and then in 2005.

Some of the important changes in 1983 version included: addition of development control rules, requirements for greenbelts and landscaping including norms for plantation of shrubs and trees, special requirements for low income housing; fire safety regulations for high rise buildings; revision of structural design sections based on new and revised codes, such as Concrete Codes (plain and reinforced concrete and prestressed concrete), Earthquake Code, Masonry Code; addition of outside design conditions for important cities in the country, requirements relating to noise and vibration, air filter, automatic control, energy conservation for air conditioning; and guidance on the design of water supply system for multi-storeyed buildings.

Since the publication of 1983 version of National Building Code of India, the construction industry had gone through major technological advancement. In next two decades, substantial expertise had been gained in the areas of building planning, designing and construction. Also, lot of developments had taken place in the techno-legal regime and techno-financial regime, apart from the enormous experience gained in dealing with natural calamities like super cyclones and earthquakes faced by the country. Further, since the revision in 1983, based on the changes effected in the Steel Code, Masonry Code and Loading Code, as also in order to update the fire protection requirements, three amendments were brought out to the 1983 version of the Code. Considering these, it was decided to take up a comprehensive second revision of the National Building Code of India.

The major changes incorporated in the second revision of the Code in 2005 were: incorporation of a new Part 0 'Integrated approach–Prerequisite for applying provisions of the Code' emphasizing on multi-disciplinary team approach for successfully accomplishing building/development project; addition of new chapters on significant

areas like structural design using bamboo, mixed/composite construction, and landscape planning and design; incorporation/modification of number of provisions relating to reform in administrative aspects, also detailing therein provisions to ensure structural sufficiency of buildings to facilitate implementation of the related requirements to help safely face the challenges during natural disasters like earthquake; incorporation of planning norms and requirements for hilly areas and rural habitat planning, apart from incorporation of detailed planning norms for large number of amenities; categorization of fire safety aspects distinctly into fire prevention, life safety and fire protection giving detailed treatment to each based on current information, developments and latest practices followed in the country; assigning due importance to the aspects like energy conservation and sustainable development in various parts and sections through appropriate design, usage and practices with regard to building materials, construction technologies and building and plumbing services giving due consideration to renewable resources like bamboo and practices like rain water harvesting; incorporation of the revised Earthquake Code, IS 1893 (Part 1) : 2002 'Criteria for earthquake resistant design of structures: Part 1 General provisions and buildings (*fifth revision*)' for due implementation of the provisions thereof in applicable seismic zones of the country, by the Authorities.

Two amendments were thereafter issued to the Code in 2015; first to include a new chapter relating to sustainability namely, Part 11 'Approach to Sustainability', and the second to modify/include certain provisions in Part 4 'Fire and Life Safety'.

Due to large scale changes in the building construction activities, such as change in nature of occupancies with prevalence of high rises and mixed occupancies, greater dependence and complicated nature of building services, development of new/innovative construction materials and technologies, greater need for preservation of environment and recognition of need for planned management of existing buildings and built environment, there has been a paradigm shift in building construction scenario. A comprehensive revision has therefore been brought out to address all these aspects and also reflect the changes incorporated in various standards which are considerably utilized in the Code. The major changes incorporated in this third revision of the Code are as follows:

a) Provisions for association of need based professionals and agencies have been updated to ensure proper discharge of responsibilities for accomplishment of building project.
b) With a view to ensuring ease of doing business in built environment sector, a detailed provision for streamlining the approval process in respect of different agencies has been incorporated in the form of an integrated approval process through single window approach for enabling expeditious approval process, avoiding separate clearances from various authorities.
c) Further, with a view to meeting the above objective, the provision on computerization of approval process has been detailed, enabling online submission of plans, drawings and other details, and sanction thereof, aiding in speedier approval process.
d) The mechanism of ensuring certification of structural safety of buildings by the competent professional and peer review of design of buildings, have been further strengthened.
e) Requirements for accessibility in buildings and built environment for persons with disabilities and the elderly have been thoroughly revised and updated.
f) Provisions on fire and life safety have been thoroughly revised to meet the challenges of modern complex building types including the high rises.
g) Latest structural loading and design and construction codes including those relating to wind load, earthquake resistant design of buildings, steel design and foundations have been incorporated with a view to ensuring structural safety of buildings including against a disaster.
h) Provisions relating to all building and plumbing services have been updated keeping also in view the latest international practices as related to the country.
j) Provisions have been updated to ensure utilization of number of new/alternative building materials and technologies to provide for innovation in the field of building construction.
k) Construction management guidelines have been incorporated to aid in timely completion of building projects with desired quality in a safe manner within the budgeted cost.
m) Guidance has been provided for making buildings and built environment energy efficient and environmentally compatible, through the newly introduced and updated chapter on sustainability, namely Part 11 'Approach to Sustainability'.
n) New chapters have been added on structural use of glass; escalators and moving walks; information and communication enabled installations; solid waste management; and asset and facility management. The new Part on Approach to Sustainability has also been duly incorporated in the Code.

The specific major changes incorporated in each Part/Section of the Code have been enlisted in the Foreword of the respective Part/Section.

The Code now published is the third revision or fourth version representing the present state of knowledge on various aspects of building construction. The process of preparation of the 2016 version of the Code has thrown up a number of problems; some of them were answered fully and some partially. Therefore, a continuous programme will go on by which additional knowledge that is gained through technological evolution, users' views over a period of time pinpointing areas of clarification and coverage, and results of research in the field, would be incorporated in to the Code from time-to-time to make it a living document. It is, therefore, proposed to bring out changes to the Code periodically.

The provisions of this Code are intended to serve as a model for adoption by local bodies, Public Works Departments and other government construction departments, and other construction agencies. Existing PWD codes, municipal byelaws and other regulatory media could either be replaced by the National Building Code of India or suitably modified to cater to local requirements in accordance with the provisions of the Code. Any difficulties encountered in adoption of the Code could be brought to the notice of the National Building Code Sectional Committee for corrective action.

COMMITTEE COMPOSITION

National Building Code Sectional Committee, CED 46

Chairman

Dr H. C. Visvesvaraya
'Chandrika', at 15th Cross, 63-64 East Park Road,
Malleswaram, Bengaluru 560003

Vice-Chairman

Shri V. Suresh
'Isa Vasyam' TC-18/1023, B-8/2-Lakshmi Nagar,
Kesavadasapuram, Thiruvananthapuram 695004

Chairman, Civil Engineering Division Council, CEDC

Shri H. S. Dogra

Organization	*Representative(s)*
Ahmedabad Municipal Corporation, Ahmedabad	Dr Vatsal S. Patel Shri Jagdish A. Patel (*Alternate*)
Airports Authority of India, New Delhi	Shri D. K. Kamra Shri S. G. Panicker (*Alternate*)
Association of Consulting Civil Engineers (India), Bengaluru	Dr Aswath M. U. Shri Avinash D. Shirode (*Alternate*)
Bruhat Bengaluru Mahanagara Palike, Bengaluru	Commissioner Chief Engineer (Project) (*Alternate*)
Builders Association of India, Mumbai	Shri Sanjay V. Vaichal Shri H. S. Pasricha (*Alternate*)
Building Materials & Technology Promotion Council, New Delhi	Dr Shailesh Kumar Agrawal
Bureau of Energy Efficiency, New Delhi	Shri Sanjay Seth
CSIR-Central Building Research Institute, Roorkee	Director Dr A. K. Minocha (*Alternate*)
CSIR-Structural Engineering Research Centre, Chennai	Dr P. Srinivasan Dr Jolly Annie Peter (*Alternate*)
Central Public Works Department, New Delhi	Shri M. K. Sharma Shri Rajesh Khare (*Alternate*)
Chennai Metropolitan Development Authority, Chennai	Member Secretary Dr S. Chithra (*Alternate*)
Confederation of Real Estate Developers' Association of India, New Delhi	Shri G. Yoganand Shri Prashant Sarode (*Alternate*)
Construction Industry Development Council, New Delhi	Shri P. R. Swarup Shri Ravi Jain (*Alternate*)
Council of Architecture, New Delhi	Shri Divya Kush Shri A. R. Ramanathan (*Alternate*)
Delhi Development Authority, New Delhi	Engineer Member Chief Engineer (Design) (*Alternate*)
Delhi Fire Service, Govt of NCT of Delhi, New Delhi	Shri A. K. Sharma
Directorate General of Employment and Training, New Delhi	Representative
Engineers India Ltd, New Delhi	Shri J. K. Bhagchandani Shri Deepak Agrawal (*Alternate*)
Forest Research Institute (ICFRE), Dehra Dun	Director General Director (*Alternate*)
Gujarat State Disaster Management Authority, Gandhinagar	Representative
Himachal Pradesh Urban Development Authority, Shimla	Shri Dinesh Kumar Kashyap Shri Umesh Kumar Sharma (*Alternate*)
Hiranandani Construction Pvt Ltd, Mumbai	Shri Niranjan Hiranandani Shri Cyrus Pithawalla (*Alternate*)

Organization	*Representative(s)*
Housing & Urban Development Corporation Limited, New Delhi	CHAIRMAN AND MANAGING DIRECTOR SHRIMATI USHA PRASAD MAHAVIR (*Alternate*)
Indian Association of Structural Engineers, New Delhi	SHRI MAHESH TANDON SHRI MAHENDRA RAJ (*Alternate*)
Indian Buildings Congress, New Delhi	SHRI K. B. RAJORIA SHRI DEEPAK NARAYAN (*Alternate*)
Indian Geotechnical Society, New Delhi	PROF A. SREERAMA RAO DR ABHAY GUPTA (*Alternate*)
Indian Green Building Council, Hyderabad	SHRI S. SRINIVAS SHRI PRAVEEN KUMAR SOMA (*Alternate*)
Indian Institute of Technology Madras, Chennai	DR BENNY RAPHAEL DR AMLAN K. SENGUPTA (*Alternate*)
Indian Roads Congress, New Delhi	SECRETARY GENERAL DIRECTOR (*Alternate*)
Institute of Town Planners, India, New Delhi	DR S. K. KULSHRESTHA
Institution of Fire Engineers (India), New Delhi	SHRI U. S. CHILLAR SHRI N. S. PATYAL (*Alternate*)
Larsen & Toubro Limited, Chennai	SHRI K. SENTHILNATHAN SHRI STHALADIPTI SAHA (*Alternate*)
Madhya Pradesh Housing & Infrastructure Development Board, Bhopal	SHRI PRAKASH SANGAMNERKAR
Military Engineer Services, Engineer-in-Chief's Branch, Army HQ, New Delhi	BRIG GIRISH JOSHI LT COL GAURAV KAUSHIK (*Alternate*)
Ministry of Home Affairs (Directorate General of Fire Services, Civil Defence & Home Guards), New Delhi	SHRI D. K. SHAMI
Ministry of Home Affairs (Disaster Management Division), New Delhi	JOINT SECRETARY (DM)
Ministry of New and Renewable Energy, New Delhi	REPRESENTATIVE
Ministry of Urban Development, New Delhi	JOINT SECRETARY (URBAN DEVELOPMENT)
Municipal Corporation of Greater Mumbai, Mumbai	DIRECTOR CITY ENGINEER (*Alternate*)
NBCC (India) Limited, New Delhi	SHRI HEM RAJ MS ANNU GARG (*Alternate*)
National Council for Cement and Building Materials, Ballabgarh	SHRI V. V. ARORA SHRI SATISH SHARMA (*Alternate*)
National Design & Research Forum, The Institution of Engineers (India), Bengaluru	DIRECTOR
National Disaster Management Authority, New Delhi	SHRI ANIL KUMAR SANGHI SHRI SACHIDANAND SINGH (*Alternate*)
National Institute of Disaster Management, New Delhi	DR CHANDAN GHOSH
New Okhla Industrial Development Authority, Noida	SHRI S. C. GAUR SHRI A. K. GOEL (*Alternate*)
North Eastern Council, Shillong	ADVISER (T&C)
Punjab Urban Planning & Development Authority, Mohali	SHRI RAJIV MOUDGIL SHRI SUNIL KANSAL (*Alternate*)
RITES Ltd, Gurugram	SHRIMATI ANITA DHAR KAUL SHRI RAJEEV NANDA (*Alternate*)
School of Planning and Architecture, New Delhi	DIRECTOR DR V. K. PAUL (*Alternate*)
Suri and Suri Consulting Acoustical Engineers, Noida	SHRI GAUTAM SURI
Sustainable Urbanism International, Bengaluru	DR JYOTI HOSAGRAHAR
The Energy and Resources Institute, New Delhi	SHRI PRADEEP KUMAR MS SONIA RANI (*Alternate*)
The Indian Institute of Architects, Mumbai	SHRI BALBIR VERMA SHRI ABHIJIT RAY (*Alternate*)
The Institution of Engineers (India), Kolkata	SHRI O. P. GOEL SHRI K. B. RAJORIA (*Alternate*)

Organization	*Representative(s)*
The Institution of Surveyors, New Delhi	SHRI D. L. VOHRA DR S. N. BANSAL (*Alternate*)
Town and Country Planning Organization, Ministry of Urban Development, New Delhi	CHIEF PLANNER SHRI R. SRINIVAS (*Alternate*)
Unitech Limited, Gurugram	SHRI ANIL KUMAR CHOPRA SHRI SANJAY TYAGI (*Alternate*)
In personal capacity (*D-29, Defence Colony, New Delhi 110024*)	DR J. R. BHALLA
BIS Directorate General	SHRI B. K. SINHA, Scientist 'E' and former Head (Civil Engg) [Representing Director General (*Ex-officio*)]

Member Secretary
SHRI SANJAY PANT
Scientist 'E' and Head (Civil Engg), BIS

Joint Member Secretaries
SHRI S. ARUN KUMAR
Scientist 'D' (Civil Engg), BIS

SHRIMATI MADHURIMA MADHAV
Scientist 'C' (Civil Engg), BIS

Other BIS Team Members
SHRI ROHIT SACHDEVA
Scientist 'B' (Civil Engg), BIS

SHRI ARNAB CHAKRABORTY
Scientist 'B' (Civil Engg), BIS

Adhoc Group for Part 0 of NBC, CED 46:AG

Organization	*Representative(s)*
In personal capacity (*'Chandrika', at 15th Cross, 63-64 East Park Road, Malleswaram, Bengaluru 560003*)	DR H. C. VISVESVARAYA (***Convener***)
In personal capacity (*'Isa Vasyam' TC-18/1023,B-8/2-Lakshmi Nagar, Kesavadasapuram, Thiruvananthapuram 695004*)	SHRI V. SURESH
Chairman, Civil Engineering Division Council, CEDC (BIS)	SHRI H. S. DOGRA
Indian Association of Structural Engineers, New Delhi (President)	SHRI MAHESH TANDON
The Indian Institute of Architects, Mumbai (Past President)	SHRI BALBIR VERMA
In personal capacity (*102, Shraddha Temple Tree, Rustam Bagh, Bengaluru 560017*)	SHRI P. KRISHNAN
In personal capacity (*Pine 002, SJR Park Vista Apartments, Haralur Road, Bengaluru 560012*)	SHRI J. N. BHAVANI PRASAD

Panel for Administration, Development Control Rules and General Building Requirements, CED 46:P1

Organization	*Representative(s)*
In personal capacity (*'Isa Vasyam' TC-18/1023, B-8/2-Lakshmi Nagar, Kesavadasapuram, Thiruvananthapuram 695004*)	SHRI V. SURESH (***Convener***)
Association of Consulting Civil Engineers (India), Bengaluru	SHRI AVINASH D. SHIRODE SHRI UMESH B. RAO (*Alternate*)
Building Materials & Technology Promotion Council, New Delhi	DR SHAILESH KUMAR AGRAWAL SHRI J. K. PRASAD (*Alternate*)
Central Public Works Department, New Delhi	CHIEF ENGINEER (CSQ) CHIEF ARCHITECT (NDR) (*Alternate*)
Consulting Engineers Association of India, New Delhi	SHRI S. C. MEHROTRA SHRI V. P. AGARWAL (*Alternate*)
Corporation of Chennai, Chennai	SHRI R. MANOHARAN SHRI A. S. MURUGAN (*Alternate*)
Council of Architecture, New Delhi	SHRI DIVYA KUSH SHRI A. R. RAMANATHAN (*Alternate*)

Organization	*Representative(s)*
CSIR-Central Building Research Institute, Roorkee	DIRECTOR DR ACHAL KUMAR MITTAL (*Alternate*)
Delhi Development Authority, New Delhi	SHRI D. P. SINGH SHRI UMESH KUMAR (*Alternate*)
Engineering Council of India, New Delhi	SHRI MAHESH TANDON DR S. CHATTERJEE (*Alternate*)
Ghaziabad Development Authority, Ghaziabad	CHIEF TOWN PLANNER SHRI V. K. GOYAL (*Alternate*)
Housing & Urban Development Corporation Limited, New Delhi	SHRI AKHILESH KUMAR SHRI V. K. JOSHI (*Alternate*)
Indian Association of Structural Engineers, New Delhi	SHRI MAHENDRA RAJ SHRI MANOJ MITTAL (*Alternate*)
Institute of Town Planners, India, New Delhi	DR S. K. KULSHRESTHA
Municipal Corporation of Greater Mumbai, Mumbai	CHIEF ENGINEER (DEV PLAN) DEPUTY CHIEF ENGINEER (DEV PLAN)-I (*Alternate*)
National Council for Cement and Building Materials, Ballabgarh	SHRI V. V. ARORA SHRI SATISH SHARMA (*Alternate*)
National Real Estate Development Council, New Delhi	BRIG R. R. SINGH
School of Planning and Architecture, New Delhi	PROF MANDEEP SINGH PROF P. S. N. RAO (*Alternate*)
South Delhi Municipal Corporation, New Delhi	SHRI SUDHIR MEHTA SHRI BRAJESH KUMAR (*Alternate*)
Svayam, New Delhi	SHRI SUBHASH CHANDRA VASHISHTH
The Indian Institute of Architects, Mumbai	SHRI BALBIR VERMA SHRI ABHIJIT RAY (*Alternate*)
The Institution of Engineers (India), Kolkata	SHRI ASHOK KUMAR BASA SHRI P. SURYA PRAKASH (*Alternate*)
Town and Country Planning Organization, Ministry of Urban Development, New Delhi	SHRI K. K. JOADDER SHRI R. SRINIVAS (*Alternate*)
West Bengal Housing Infrastructure Development Corporation Limited, Kolkata	CHIEF PLANNER ADDITIONAL CHIEF PLANNER (*Alternate*)
In personal capacity [*Shop No. 15, Natraj Building, Shiv Srishti Complex, Mulund (W), Mumbai 400080*]	SHRI SHASHIKANT L. JADHAV

Panel for Fire Protection, CED 46:P2

Organization	*Representative(s)*
In personal capacity (*K-33A, First Floor, Green Park, New Delhi 110016*)	SHRI S. K. DHERI (***Convener***)
AECOM India Private Limited, Noida	REPRESENTATIVE
Airports Authority of India, New Delhi	SHRI AJAY KUMAR BHARADWAJ
Central Industrial Security Force, New Delhi	SHRI RAJNATH SINGH
Central Public Works Department, New Delhi	SHRI CHAITANYA KUMAR VARMA SHRI D. K. TULANI (*Alternate*)
CSIR-Central Building Research Institute, Roorkee	DR SUVIR SINGH SHRI A. A. ANSARI (*Alternate*)
Delhi Fire Service, Govt of NCT of Delhi, New Delhi	SHRI A. K. SHARMA DR G. C. MISRA (*Alternate*)
Delhi Metro Rail Corporation, New Delhi	SHRI A. K. SINGH SHRIMATI RASHMI BHARDWAJ (*Alternate*)
Directorate of Fire & Emergency Services, Govt of Goa, Goa	SHRI ASHOK MENON SHRI PRAKASH M. PARAB (*Alternate*)
Directorate of Maharashtra Fire Services, Mumbai	SHRI M. V. DESHMUKH SHRI S. S. WARICK (*Alternate*)
Fire & Security Association of India, Chennai	SHRI SRINIVAS VALLURI

Organization	*Representative(s)*
FM Engineering International (India) Pvt Ltd, Bengaluru	Shri Sumit Khanna Shri Manikandan Krishnamurthy (*Alternate*)
FYRPROTEK (Fire Engineers & Consultants), New Delhi	Shri Gulshan Khurana
Glazing Society of India, New Delhi	Shri R. Subramanian Shri G. N. Gohul Deepak (*Alternate*)
Indian Plumbing Association, New Delhi	Shri M. K. Gupta Shri S. K. Duggal (*Alternate*)
Institution of Fire Engineers (India), New Delhi	Shri U. S. Chhillar Shri M. S. Patyal (*Alternate*)
Insurance Regulatory and Development Authority, Hyderabad	Shri Randip Singh Jagpal Shri T. S. Naik (*Alternate*)
Kaleidoscope, Noida	Shri Amor Kool
Kone Elevator India Pvt Ltd, Chennai	Shri J. Sivaraman Shri P. M. Tipnis (*Alternate*)
Lloyd Insulations (India) Ltd, New Delhi	Shri Sanjeev Angra Shri K. K. Mitra (*Alternate*)
Maple Engineering-Design Services (India) Pvt Ltd, Bengaluru	Shri B. S. Aswathnarayan (B. S. A. Narayan) Shri H. R. Ranganath (*Alternate*)
Military Engineer Services, Engineer-in-Chief's Branch, Army HQ, New Delhi	Shri S. K. Arora Col Naresh Sharma (*Alternate*)
Ministry of Home Affairs (Directorate General of Fire Services, Civil Defence & Home Guards), New Delhi	Shri D. K. Shami
Municipal Corporation of Greater Mumbai (Mumbai Fire Brigade), Mumbai	Chief Fire Officer Deputy Chief Fire Officer (*Alternate*)
National Council for Cement and Building Materials, Ballabgarh	Shri V. V. Arora
National Fire Service College, Nagpur	Shri Shamim
Oil Industry Safety Directorate, New Delhi	Shri A. K. Arora
Proion Consultants, New Delhi	Shri Sandeep Goel
School of Planning and Architecture, New Delhi	Dr V. K. Paul
Tamil Nadu Fire and Rescue Services Department, Chennai	Shri S. Vijayasekar
Telangana State Disaster Response and Fire Services Department, Hyderabad	Shri P. Venkateshwar Shri K. Jairam Naik (*Alternate*)
The Indian Institute of Architects, Mumbai	Shri Kapil Mehta Shri Ajay Puri (*Alternate*)
The Institution of Engineers (India), Kolkata	Dr M. P. Chowdiah Shri K. B. Rajoria (*Alternate*)
UL India Pvt Ltd, Bengaluru	Shri V. Jagdish Shri G. Karthikeyan (*Alternate*)
Uttar Pradesh Fire Service, Lucknow	Shri P. K. Rao Shri Aman Sharma (*Alternate*)
West Bengal Fire & Emergency Services, Kolkata	Shri D. P. Biswas Shri Gopal K. Bhattacharya (*Alternate*)
In personal capacity (*SJR Verity, VIVA-305, Amrita College Road, Kasavanahalli, Bengaluru 560035*)	Shri T. R. A. Krishnan
In personal capacity (*A-347, Defence colony, New Delhi 110024*)	Shri R. C. Sharma
In personal capacity (*'Isa Vasyam' TC-18/1023, B-8/2-Lakshmi Nagar, Kesavadasapuram, Thiruvananthapuram 695004*)	Shri V. Suresh

Panel for Building Materials, CED 46:P3

Organization	*Representative(s)*
In personal capacity (*8th Floor, Flat No. 2, Tower 6, ATS-One Hamlet, Sector 104, Noida 201301*)	Shri T. N. Gupta (***Convener***)
Building Materials & Technology Promotion Council, New Delhi	Dr Shailesh Kumar Agrawal Shri J. K. Prasad (*Alternate*)

Organization	*Representative(s)*
CSIR-Central Building Research Institute, Roorkee	Dr A. K. Minocha Dr S. R. Karade (*Alternate*)
Central Public Works Department, New Delhi	Chief Engineer (CSQ) Shri Mathura Prasad (*Alternate*)
Delhi Development Authority, New Delhi	Representative
Directorate General Border Roads, New Delhi	Representative
DLF Limited, Gurugram	Representative
Housing & Urban Development Corporation Limited, New Delhi	Chairman and Managing Director Shri Akhilesh Kumar (*Alternate*)
Indian Institute of Technology Guwahati, Guwahati	Representative
Indian Institute of Technology Madras, Chennai	Dr Amlan K. Sengupta Dr Manu Santhanam (*Alternate*)
Indian Buildings Congress, New Delhi	Shri Deepak Narayan
Indian Plywood Industries Research & Training Institute, Bengaluru	Shri K. Shyama Sundar Shri M. Pavan Kumar (*Alternate*)
Inter-University Accelerator Centre, New Delhi	Shri M. K. Gupta
Larsen & Toubro Limited, Chennai	Representative
Military Engineer Services, Engineer-in-Chief's Branch, Army HQ, New Delhi	Brig Girish Joshi Lt Col Gaurav Kaushik (*Alternate*)
National Council for Cement and Building Materials, Ballabgarh	Director General Shri V. V. Arora (*Alternate*)
The Indian Institute of Architects, Mumbai	Shri Anurag Roy Shri Atul Gupta (*Alternate*)
The Institution of Engineers (India), Kolkata	Shri Anil Gattani Shri A. V. Patil (*Alternate*)
In personal capacity (*220, Sector 21-A, Faridabad 121001*)	Shri M. M. Goyal

Panel for Loads, Forces and Effects, CED 46:P4

Organization	*Representative(s)*
In personal capacity (*c/o Academy of Scientific & Innovative Research CSIR Campus, Taramani, Chennai 600113*)	Dr Nagesh R. Iyer (***Convener***)
Association of Consulting Civil Engineers (India), Bengaluru	Shri Manoj Mittal
Building Materials & Technology Promotion Council, New Delhi	Dr Shailesh Kumar Agrawal Shri A. K. Tiwari (*Alternate*)
Central Public Works Department, New Delhi	Chief Engineer (CDO) Shri Rajesh Khare (*Alternate*)
Creative Design Consultants & Engineers Pvt Ltd, Ghaziabad	Shri Aman Deep
CSIR-Central Building Research Institute, Roorkee	Dr Achal Kumar Mittal Dr Ajay Chourasia (*Alternate*)
CSIR-Structural Engineering Research Centre, Chennai	Dr J. Rajasankar Dr G. S. Palani (*Alternate*)
Delhi Tourism and Transportation Development Corporation, New Delhi	Shri Shishir Bansal
India Meteorological Department, New Delhi	Dr Devendra Pradhan Shri K. N. Mohan (*Alternate*)
Indian Association of Structural Engineers, New Delhi	Shri Mahesh Tandon Shri R. Gogia (*Alternate*)
Indian Institute of Technology Delhi, New Delhi	Dr Vasant Matsagar Dr Dipti Ranjan Sahoo (*Alternate*)
Indian Institute of Technology Jodhpur, Jodhpur	Dr C. V. R. Murthy
Indian Institute of Technology Roorkee, Roorkee	Dr D. K. Paul
Larsen & Toubro Limited, Chennai	Shri Surya Prakash Karri Shri Krishna Somaraju (*Alternate* 1) Shri Praveen Kumar Rai (*Alternate* 2)
Mahendra Raj Consultants Pvt Ltd, New Delhi	Shri Mahendra Raj Shri S. S. Maan (*Alternate*)

Organization	*Representative(s)*
Mehro Consultants, New Delhi	Shri S. C. Mehrotra Shri Deepak Thakur (*Alternate*)
National Council for Cement and Building Materials, Ballabgarh	Shri V. V. Arora Shri B. S. Rao (*Alternate*)
National Institute of Disaster Management, New Delhi	Representative
The Institution of Engineers (India), Kolkata	Shri U. P. Waghe Shri Anil Gattani (*Alternate*)
In personal capacity (*L-802, Design Arch, e-Homes, Sector-5, Vaishali, Ghaziabad 201010*)	Dr A. S. Arya
In personal capacity (*B-03-3, Raheja Atlantis, NH 8, Sector 31-32A, Gurugram 122001*)	Dr Prem Krishna
In personal capacity (*'Isa Vasyam' TC-18/1023, B-8/2-Lakshmi Nagar, Kesavadasapuram, Thiruvananthapuram 695004*)	Shri V. Suresh

Panel for Soils and Foundations, CED 46:P5

Organization	*Representative(s)*
In personal capacity (*188/90, Prince Anwar Shah Road, Kolkata 700045*)	Dr N. Som (***Convener***)
Afcons Infrastructure Limited, Mumbai	Shri P. S. Bansod Shri V. Ramamurty (*Alternate*)
Bharat Heavy Electricals Limited, Noida	Shri C. Pushpakaran Shri Hitesh Kumar (*Alternate*)
Cengrs Geotechnica Pvt Ltd, Noida	Shri Sanjay Gupta Shri Ravi Sundaram (*Alternate*)
CSIR-Central Building Research Institute, Roorkee	Dr Pradeep Kumar Shri Anindya Pain (*Alternate*)
Central Public Works Department, New Delhi	Shri M. K. Sharma Shri Saurabh Gupta (*Alternate*)
Creative Design Consultants & Engineers Pvt Ltd, Ghaziabad	Shri Aman Deep
Delhi Development Authority, New Delhi	Chief Engineer (Design) Shri Vijay Shanker (*Alternate*)
Indian Institute of Technology Delhi, New Delhi	Dr J. T. Shahu Dr R. Ayothiraman (*Alternate*)
Indian Institute of Technology Madras, Chennai	Representative
Indian Association of Structural Engineers, New Delhi	Shri Sushil K. Dhawan Dr Abhay Gupta (*Alternate*)
Indian Geotechnical Society, New Delhi	Maj Gen (Retd) S. N. Mukherjee Shri Sanjay Gupta (*Alternate*)
ITD Cementation Pvt Ltd, Mumbai	Shri Hemendra Chaudhary
Military Engineer Services, Engineer-in-Chief's Branch, Army HQ, New Delhi	Brig Girish Joshi Col Pradeep Tiwari (*Alternate*)
NTPC Limited, New Delhi	Dr D. N. Naresh Shri Jitendra Kumar (*Alternate*)
National Council for Cement and Building Materials, Ballabgarh	Shri V. V. Arora Shri P. N. Ojha (*Alternate*)
National Institute of Disaster Management, New Delhi	Dr Chandan Ghosh Dr Amir Ali Khan (*Alternate*)
The Institution of Engineers (India), Kolkata	Prof G. B. Choudhari Dr S. S. Basarkar (*Alternate*)
In personal capacity (*C-4-B, CDS Regal Palm Garden, 383, Velachery, Chennai 600042*)	Shri A. Vijayaraman

Panel for Timber and Bamboo, CED 46:P6

Organization	*Representative(s)*
In personal capacity (*Pratap Nursery Lane, Near Gurudwara, Panditwari, Dehra Dun 248007*)	Shri K. S. Pruthi (***Convener***)

Organization	*Representative(s)*
Bamboo Society of India, Bengaluru	Dr K Sundar Naik Shri K. S. Anand (*Alternate*)
Building Materials & Technology Promotion Council, New Delhi	Dr Shailesh Kumar Agrawal Shri C. N. Jha (*Alternate*)
CSIR-Central Building Research Institute, Roorkee	Dr B. Singh Dr B. S. Rawat (*Alternate*)
Central Public Works Department, New Delhi	Chief Engineer (CSQ) Shri Mathura Prasad (*Alternate*)
Creative Design Consultants & Engineers Pvt Ltd, Ghaziabad	Shri Aman Deep
Forest Research Institute (ICFRE), Dehra Dun	Shri Rajesh Bhandari Shri R. S. Topwal (*Alternate*)
Forum of Scientists, Engineers and Technologists, Kolkata	Shri Rabi Mukhopadhyay Shri Parthasarathi Mukhopadhyay (*Alternate*)
Housing & Urban Development Corporation Limited, New Delhi	Chairman and Managing Director Shri Akhilesh Kumar (*Alternate*)
Indian Association of Structural Engineers, New Delhi	Dr Dulal Goldar Shri Hari Om Gupta (*Alternate*)
Indian Institute of Technology Delhi, New Delhi	Dr Suresh Bhalla
Indian Plywood Industries Research and Training Institute, Bengaluru	Shri Anand Nandanwar Shri Narasimhamurthy (*Alternate*)
Iyer and Mahesh Architects, Thiruvanthapuram	Shri N. Mahesh Shri K. Gangadharan (*Alternate*)
Military Engineer Services, Engineer-in-Chief's Branch, Army HQ, New Delhi	Shrimati Upinder Kaur Shrimati Rachna (*Alternate*)
North East Centre for Technology Application and Reach, Shillong	Shri Ajay Kumar Shri Krishna Kumar (*Alternate*)
The Institution of Engineers (India), Kolkata	Shri Krishna Kumar
Wonder Grass Initiative Pvt Ltd, Nagpur	Shri Vaibhav Kaley
In personal capacity (*103/II, Vasant Vihar, P.O. New Forest, Dehra Dun 248006*)	Shri S. S. Rajput

Panel for Masonry, CED 46:P7

Organization	*Representative(s)*
National Council for Cement and Building Materials, Ballabgarh	Shri V. V. Arora (***Convener***)
Adlakha Associates Pvt Ltd, New Delhi	Shri P. K. Adlakha Shri V. K. Sethi (*Alternate*)
Association of Consulting Civil Engineers (India), Bengaluru	Shri Umesh B. Rao Dr Raghunath S. (*Alternate*)
Bhabha Atomic Reaseach Centre, Trombay	Shri K. Srinivas Shri H. E. Iyer (*Alternate*)
Building Materials & Technology Promotion Council, New Delhi	Dr Shailesh Kumar Agrawal Shri Pankaj Gupta (*Alternate*)
Central Public Works Department, New Delhi	Shri A. K. Jha Shri Rajesh Khare (*Alternate*)
CSIR-Central Building Research Institute, Roorkee	Dr Achal Kumar Mittal Dr Ajay Chourasia (*Alternate*)
CSIR-Structural Engineering Research Centre, Chennai	Dr A. Ramachandra Murthy Ms Smitha Gopinath (*Alternate*)
Delhi Development Authority, New Delhi	Chief Engineer (Design) Shri Vijay Shanker (*Alternate*)
Indian Association of Structural Engineers, New Delhi	Shri R. Gogia Ms Sangeeta Wij (*Alternate*)
Indian Institute of Science, Bengaluru	Dr B. V. Venkatarama Reddy Dr K. S. Nanjunda Rao (*Alternate*)

Organization	*Representative(s)*
Indian Institute of Technology Delhi, New Delhi	Representative
Indian Institute of Technology Kanpur, Kanpur	Dr Durgesh C. Rai
Indian Institute of Technology Madras, Chennai	Dr Arun Menon
Military Engineer Services, Engineer-in-Chief's Branch, Army HQ, New Delhi	Brig Rajiv Sahani Shri Jai Prakash (*Alternate*)
National Council for Cement and Building Materials, Ballabgarh	Shri Satish Sharma
The Institution of Engineers (India), Kolkata	Shri P. T. Tawase Shri Azad Jain (*Alternate*)

Panel for Plain, Reinforced and Prestressed Concrete, CED 46:P8

Organization	*Representative(s)*
In personal capacity (*7A, Autumn Hue, Seasons PPD Apartments, Kuravankonam, Kowdiar, Thiruvananthapuram 695003*)	Shri Jose Kurian (***Convener***)
Association of Consulting Civil Engineers (India), Bengaluru	Shri M. S. Sudharshan
BBR (India) Pvt Ltd, Bengaluru	Shri P. Jayachandran Shri Bharat Bhushan (*Alternate*)
Central Public Works Department, New Delhi	Chief Engineer (CDO) Shri Rajesh Khare (*Alternate*)
Creative Design Consultants & Engineers Pvt Ltd, Ghaziabad	Shri Aman Deep
CSIR-Central Building Research Institute, Roorkee	Shri S. K. Singh Shri S. C. Bose Gurram (*Alternate*)
CSIR-Central Road Research Institute, New Delhi	Shri J. B. Sengupta Shri Binod Kumar (*Alternate*)
CSIR-Structural Engineering Research Centre, Chennai	Dr K. Ramanjaneyulu Dr B. H. Bharathkumar (*Alternate*)
Delhi Development Authority, New Delhi	Shri Vijay Shanker
Gammon India Limited, Mumbai	Shri Sarada Prasana Mohanty
Hindustan Prefab Limited, New Delhi	Shri Rajesh Goel Shri S. K. Jain (*Alternate*)
Indian Association of Structural Engineers, New Delhi	Shri S. C. Mehrotra Dr Rajeev Goel (*Alternate*)
Indian Concrete Institute, Chennai	Shri A. K. Jain Shri K. P. Abraham (*Alternate*)
Indian Institute of Science, Bengaluru	Representative
Indian Institute of Technology Madras, Chennai	Dr Amlan K. Sengupta
Larsen & Toubro Limited, Chennai	Shri K. Senthilnathan Shri Sthaladipti Saha (*Alternate*)
Military Engineer Services, Engineer-in-Chief's Branch, Army HQ, New Delhi	Representative
Ministry of Road Transport and Highways, New Delhi	Chief Engineer, Standard & Research (Bridges)
National Council for Cement and Building Materials, Ballabgarh	Shri V. V. Arora Shri Satish Sharma (*Alternate*)
Research, Designs and Standards Organization (Ministry of Railways), Lucknow	Shri H. L. Suthar Shri Praveen Khorana (*Alternate*)
STUP Consultants Pvt Ltd, Mumbai	Shri S. G. Joglekar Dr N. Bandyopadhyay (*Alternate*)
Tandon Consultants, New Delhi	Shri Mahesh Tandon
The Institution of Engineers (India), Kolkata	Shri S. S. Chakraborty Dr M. A. Chakrabarti (*Alternate*)
In personal capacity (*A-4/110, Konark Apartments, Kalkaji, New Delhi 110019*)	Dr A. K. Mullick
In personal capacity (*MIF1, VGN Minerva Apartments, Guruswamy Road, Nolambur, Chennai 600095*)	Dr C. Rajkumar

Organization	*Representative(s)*
In personal capacity (*E-1, 402, White House Apartments, 15th Cross, 6th Main, R.T. Nagar, Bengaluru 560032*)	Shri S. A. Reddi
In personal capacity (*7046, Sector B, Pocket 10, Vasant Kunj, New Delhi 110070*)	Shri T. Viswanathan
In personal capacity (*EA-92, Maya Enclave, Hari Nagar, New Delhi 110064*)	Shri R. C. Wason

Panel for Steel, CED 46:P9

Organization	*Representative(s)*
In personal capacity (*II-2A, Rani Meyyammai Towers, Chennai 600036*)	Dr V. Kalyanaraman (***Convener***)
Association of Consulting Civil Engineers (India), Bengaluru	Shri S. C. Mehrotra
Central Public Works Department, New Delhi	Chief Engineer (CDO) Shri A. K. Gupta (*Alternate*)
Creative Design Consultants & Engineers Pvt Ltd, Ghaziabad	Shri Aman Deep
CSIR-Structural Engineering Research Centre, Chennai	Dr G. S. Palani Dr G. Raghava (*Alternate*)
Engineers India Ltd, New Delhi	Shri Anurag Sinha Shri Vikram K. Gupta (*Alternate*)
Indian Association of Structural Engineers, New Delhi	Dr K. Srinivasa Rao Dr Abhay Gupta (*Alternate*)
Indian Institute of Technology Madras, Chennai	Dr S. Arul Jayachandran
Institute for Steel Development and Growth, Kolkata	Shri Pydi Lakshmana Rao Shri Arijit Guha (*Alternate*)
Interarch Building Products Pvt Ltd, Noida	Shri Gautam Suri Shri Sunil Pulikkal (*Alternate*)
Jindal Steel and Power Limited, New Delhi	Shri Ashwani Kumar Ms Neha Sharma (*Alternate*)
Kalpataru Power Transmission Ltd, Gandhinagar	Shri B. B. Shah Shri Sujal B. Shah (*Alternate*)
Larsen & Toubro Limited, Chennai	Shri T. Venkatesh Rao
M. N. Dastur & Co (P) Ltd, Kolkata	Shri Satyaki Sen Shri Tapan Kumar Bhaumik (*Alternate*)
MECON Limited, Ranchi	Shri A. Krishna Rao Shri C. Krishnam Raju (*Alternate*)
Military Engineer Services, Engineer-in-Chief's Branch, Army HQ, New Delhi	Brig Girish Joshi Lt Col Sandeep Khokher (*Alternate*)
PEB Manufacturers' Association, Navi Mumbai	Shri Gautam Suri Shri Manish Garg (*Alternate*)
Research, Designs and Standards Organization (Ministry of Railways), Lucknow	Shri A. K. Dadria Shri Srijan Tripathi (*Alternate*)
Steel Authority of India Ltd (Centre for Engineering & Technology), Ranchi	Shri R. M. Chattopadhyay Shri G. K. Mitra (*Alternate*)
Tata Consulting Engineers Limited, Mumbai	Shri Pratip Bhattacharya
Tata Steel Ltd, Jamshedpur	Shri Hariharaputhiran H.
The Institution of Engineers (India), Kolkata	Shri R. P. Gupta

Panel for Prefabrication and Systems Buildings, CED 46:P10

Organization	*Representative(s)*
L&T Metro Rail (Hyderabad) Limited, Hyderabad	Shri M. P. Naidu (***Convener***)
Adlakha Associates Pvt Ltd. New Delhi	Shri P. K. Adlakha
B. G. Shirke Construction Technology Pvt Ltd, Pune	Shri Yogesh P. Kajale Shri Sanjay M. Adsar (*Alternate*)

Organization	*Representative(s)*
Building Materials & Technology Promotion Council, New Delhi	Shri J. K. Prasad
Central Public Works Department, New Delhi	Chief Engineer (CSQ) Shri Mathura Prasad (*Alternate*)
Creative Design Consultants & Engineers Pvt Ltd, Ghaziabad	Shri Aman Deep
CSIR-Central Building Research Institute, Roorkee	Dr Ajay Chourasia Shri Narender Kumar (*Alternate*)
CSIR-Structural Engineering Research Centre, Chennai	Dr J. Prabakar Dr Jolly Annie Peter (*Alternate*)
Delhi Development Authority, New Delhi	Chief Engineer (Design) Shri Vijay Shanker (*Alternate*)
Hindustan Prefab Limited, New Delhi	Shri Rajesh Goel Shri Satish Kumar Jain (*Alternate*)
Indian Institute of Technology Madras, Chennai	Representative
Indian Association of Structural Engineers, New Delhi	Shri Mahesh Tandon Shri N. Jain (*Alternate*)
Indian Concrete Institute, Chennai	Shri Rajkumar Pillai
Institute for Steel Development and Growth, Kolkata	Shri Arijit Guha
Kirby Building Systems India Ltd, Hyderabad	Representative
Larsen & Toubro Limited, Chennai	Shri S. Veeramani Shri C. K. Somaraju (*Alternate*)
Lloyd Insulations (India) Ltd, New Delhi	Shri Ajay Singh Shri Jitendra Kumar Jain (*Alternate*)
Military Engineer Services, Engineer-in-Chief's Branch, Army HQ, New Delhi	Brig Girish Joshi Lt Col Gaurav Kaushik (*Alternate*)
National Council for Cement and Building Materials, Ballabgarh	Shri V. V. Arora Shri B. S. Rao (*Alternate*)
PEB Manufacturers' Association, Navi Mumbai	Shri Gautam Suri
Pranav Construction Systems Pvt Ltd, Navi Mumbai	Representative
Shirish Patel and Associates Consultants Pvt Ltd, Mumbai	Shri Shirish B. Patel Shri P. H. Srinivasachar (*Alternate*)
Systems Building Technologists, New Delhi	Shri G. B. Singh
Tata Bluescope Steel Ltd, Pune	Shri Krishnakant Rane
The Indian Institute of Architects, Mumbai	Shri S. R. Sikka
The Institution of Engineers (India), Kolkata	Dr R. K. Bhandari Shri Hemant S. Vadalkar (*Alternate*)

Panel for Constructional Practices and Safety, CED 46:P11

Organization	*Representative(s)*
In personal capacity (*102, Shraddha Temple Tree, Rustam Bagh, Bengaluru 560017*)	Shri P. Krishnan (***Convener***)
Adlakha Associates Pvt Ltd, Delhi	Shri P. K. Adlakha
Builders Association of India, Mumbai	Shri S. Senthil Kumar Shri Neerav Parmar (*Alternate*)
Central Public Works Department, New Delhi	Chief Engineer (CSQ) Shri Mathura Prasad (*Alternate*)
Construction Industries Development Council, New Delhi	Shri P. R. Swarup Shri Sunil Mahajan (*Alternate*)
CSIR-Central Building Research Institute, Roorkee	Shri S. K. Negi Shri S. K. Singh (*Alternate*)
Director General of Factory Advice Service and Labour Institute, Mumbai	Shri S. N. Borkar Shri B. N. Jha (*Alternate*)
Engineers India Ltd, New Delhi	Shri A. K. Mishra Shri D. Jana (*Alternate*)

Organization	*Representative(s)*
Gammon India Limited, Mumbai	SHRI PRAKASH TIKARE SHRI SYLVESTER F. PEREIRA (*Alternate*)
Hindustan Prefab Limited, New Delhi	SHRI RAJESH GOEL SHRI S. K. JAIN (*Alternate*)
Indian Association of Structural Engineers, New Delhi	SHRI MANOJ MITTAL SHRI R. GOGIA (*Alternate*)
Indian Buildings Congress, New Delhi	SHRI DEEPAK NARAYAN
Indian Plywood Industries Research & Training Institute, Bengaluru	SHRI JAGADISH VENGALA SHRI ANAND NANDANWAR (*Alternate*)
L&T Metro Rail (Hyderabad) Limited, Hyderabad	SHRI M. P. NAIDU
Larsen & Toubro Limited, Chennai	SHRI S. SELVAGANPATHY SHRI N. RAMACHANDRAN (*Alternate*)
Military Engineer Services, Engineer-in-Chief's Branch, Army HQ, New Delhi	BRIG DINESH KUMAR GUPTA SHRI B. VARSHNEY (*Alternate*)
NBCC (India) Limited, New Delhi	SHRI H. S. YADAV SHRI S. C. JAIN (*Alternate*)
School of Planning and Architecture, New Delhi	DR V. K. PAUL
The Indian Institute of Architects, Mumbai	SHRI KAILASH CHANDRA JATIA SHRI C. M. SAPRA (*Alternate*)
The Institution of Engineers (India), Kolkata	SHRI D. S. SACHDEV DR H. M. RAJE (*Alternate*)
In personal capacity (*7A, Autumn Hue, Seasons PPD Apartments, Kuravankonam, Kowdiar, Thiruvananthapuram 695003*)	SHRI JOSE KURIAN
In personal capacity (*Pratap Nursery Lane, Near Gurudwara, Panditwari, Dehra Dun 248007*)	SHRI K. S. PRUTHI
In personal capacity (*'Isa Vasyam' TC-18/1023, B-8/2-Lakshmi Nagar, Kesavadasapuram, Thiruvananthapuram 695004*)	SHRI V. SURESH
In personal capacity (*220, Ankur Apartment, Mother Dairy Road, Patparganj, New Delhi 110092*)	DR V. THIRUVENGADAM
In personal capacity (*K-11, Kailash Colony, New Delhi 110048*)	SHRI BALBIR VERMA

Panel for Lighting and Ventilation, CED 46:P12

Organization	*Representative(s)*
In personal capacity (*435/6, New Adarsh Nagar, Roorkee 247667*)	DR ISHWAR CHAND (***Convener***)
Ab Initio, Thane	SHRI SHIRISH DESHPANDE
Bureau of Energy Efficiency, New Delhi	SHRI SAURABH DIDDI SHRI ASHISH SARASWAT (*Alternate*)
Central Public Works Department, New Delhi	SHRI CHAITANYA KUMAR VARMA SHRI D. K. TULANI (*Alternate*)
CEPT University, Ahmedabad	SHRI RAJAN RAWAL SHRI YASH SHUKLA (*Alternate*)
Chandigarh College of Architecture, Chandigarh	DR PRADEEP BHAGAT
CSIR-Central Building Research Institute, Roorkee	SHRI N. BABU BALAM SHRI IBRAHIM SOHEL (*Alternate*)
CSIR-National Physical Laboratory, New Delhi	DR PARAG SHARMA SHRI V. K. JAISWAL (*Alternate*)
Director General Factory Advice Service and Labour Institute, Mumbai	SHRI S. N. BORKAR SHRI B. N. JHA (*Alternate*)
Indian Institute of Technology Delhi (Centre for Energy Studies), New Delhi	REPRESENTATIVE
Indian Society for Lighting Engineers, New Delhi	SHRI GULSHAN AGHI SHRI GAURAV ARORA (*Alternate*)
Kalcidoscope, Noida	SHRI AMOR KOOL
Larsen & Toubro Limited (Sustainability Group), Chennai	SHRI R. BALAKRISHNAN

Organization	*Representative(s)*
Military Engineer Services, Engineer-in-Chief's Branch, Army HQ, New Delhi	Shri D. K. Tyagi Shri Jaya Prakash (*Alternate*)
Ministry of New and Renewable Energy, New Delhi	Dr A. K. Tripathi Shri H. C. Borah (*Alternate*)
Municipal Corporation of Greater Mumbai, Mumbai	Executive Engineer Shri R. K. Rahate (*Alternate*)
Philips India Limited, Kolkata	Shrimati Sudeshna Mukhopadhyay Shri Ashish Bahal (*Alternate*)
School of Planning and Architecture, New Delhi	Dr V. K. Paul Dr Anil Dewan (*Alternate*)
Siddhirja Environment Technologies Pvt Ltd, Noida	Shri Ankur Khandelwal
Space Design Consultants, New Delhi	Prof Vinod Kumar Gupta
The Indian Institute of Architects, Mumbai	Prof Ashok B. Lall
The Institution of Engineers (India), Kolkata	Shri R. N. Rajpoot
In personal capacity (*262, Solanipuram, Roorkee 247667*)	Dr P. K. Bhargava
In personal capacity (*Shree Bhavan, Moh. Neelkhudana, Sikhola Chowk, Jwalapur, Haridwar 249407*)	Shri Shree Kumar

Panel for Electrical Installations, CED 46:P13

Organization	*Representative(s)*
In personal capacity (*Pine 002, SJR Park Vista Apartments, Haralur Road, Bengaluru 560012*)	Shri J. N. Bhavani Prasad (***Convener***)
AECOM India Private Limited, Noida	Shri Kishor Kumar
Aeon Integrated Building Design Consultants, New Delhi	Shri Puneet Gupta
Bureau of Energy Efficiency, New Delhi	Shri Saurabh Diddi Shri Ashish Saraswat (*Alternate*)
C&S Electric Limited, New Delhi	Shri P. S. Teji Shri Yashwant Sarathe (*Alternate*)
Central Electricity Authority, New Delhi	Shri R. K. Verma Shri A. K. Rajput (*Alternate*)
Central Public Works Department, New Delhi	Shri Chaitanya Kumar Varma Shri D. K. Tulani (*Alternate*)
Chief Electrical Inspectorate, Govt of Tamil Nadu, Chennai	Chief Electrical Inspector Senior Electrical Inspector (Hqrs) (*Alternate*)
DEHN India Pvt Ltd, Gurugram	Shri Vikas Almadi Shri Brijesh Malik (*Alternate*)
Delhi Metro Rail Corporation, New Delhi	Shri Sanjeev Kumar Shri Ashok Tewari (*Alternate*)
Engineers India Ltd, New Delhi	Shri B. R. Bhogal Shri Harish Kumar (*Alternate*)
ITC Ltd, Gurugram	Shri I. K. Suresh
Larsen & Toubro Limited, Chennai	Shri D. Maheswaran Shri K. K. Jembu Kailas (*Alternate*)
Military Engineer Services, Engineer-in-Chief's Branch, Army HQ, New Delhi	Shri D. K. Tyagi Shri Sunil Agarwal (*Alternate*)
Ministry of New and Renewable Energy, New Delhi	Representative
OBO Bettermann (I) Pvt Ltd, Chennai	Shri S. Gopakumar
Proion Consultants, New Delhi	Shrimati Shruti Goel
Public Works Department (Electrical Division), Govt of Maharashtra, Mumbai	Shri Sandeep A. Patil Shri Hemant Sali (*Alternate*)
Schneider Electric India Pvt Ltd, Gurugram	Shri Amitabha Sarkar Shri Rajkumar Singh (*Alternate*)
Siemens Limited, Chennai	Shri Kishor Yadao
Solar Energy Corporation of India, New Delhi	Shri C. K. Singh

Organization	*Representative(s)*
The Institution of Engineers (India), Kolkata	Prof Samiran Choudhuri Lt Gen (Retd) S. K. Jain (*Alternate*)
In personal capacity (*C-20, Sector 47, Noida 201301*)	Shri N. Nagarajan

Panel for Air Conditioning and Heating, CED 46:P14

Organization	*Representative(s)*
AECOM India Private Limited, Noida	Dr Prem C. Jain (***Convener***)
Aeon Integrated Building Design Consultants, New Delhi	Shri Ashish Rakheja
ASHRAE India Chapter, New Delhi	Shri Sunil Kher
Blowtech Air Devices Pvt Ltd, Noida	Shri Sushil K. Choudhury
Blue Star Limited, Chennai	Shri B. Thiagarajan Shri M. Srinivas Reddy (*Alternate*)
Bureau of Energy Efficiency, New Delhi	Shri Sanjay Seth Shri Saurabh Diddi (*Alternate*)
Caire Consult, Greater Noida	Shri Ankit Jain
Carrier Airconditioning & Refrigeration Ltd, Gurugram	Shri Arun Bhatia Shri Bimal Tandon (*Alternate*)
CSIR-Central Building Research Institute, Roorkee	Dr B. M. Suman Dr Shorab Jain (*Alternate*)
Central Public Works Department, New Delhi	Shri Chaitanya Kumar Varma Shri D. K. Tulani (*Alternate*)
CEPT University, Ahmedabad	Shri Rajan Rawal Shri Yash Shukla (*Alternate*)
Climaveneta Climate Technologies (P) Ltd, Bengaluru	Shri Anil Dev Shri Anil Sharma (*Alternate*)
Comfort Care System Pvt Ltd, New Delhi	Shri Yogesh Malhotra
Daikin Airconditioning India Pvt Ltd, Gurugram	Shri Kanwaljeet Jawa Shri Sanjay Goyal (*Alternate*)
Delhi Fire Service, Govt of NCT of Delhi, New Delhi	Shri A. K. Sharma Dr G. C. Misra (*Alternate*)
Delhi Metro Rail Corporation, New Delhi	Shri A. K. Gupta Shri A. K. Singh (*Alternate*)
Eskayem Consultants Pvt Ltd, Mumbai	Shri K. Ramachandran
IBM India Pvt Ltd, Mumbai	Shri Sudipta Sanyal
Indian Green Building Council, Hyderabad	Shri S. Srinivas Shri Praveen Kumar Soma (*Alternate*)
Indian Institute of Technology Delhi, New Delhi	Dr Sanjeev Jain
Indian Society for Heating, Refrigeration and Air Conditioning Engineers, Delhi	Shri D. Nirmal Ram Shri Ashwini Mehra (*Alternate*)
International Ground Source Heat Pump Association, India Chapter, New Delhi	Shri Richie Mittal
Kanwal Industries Corporation, Noida	Shri Pawandeep Singh
Kirloskar Chillers Private Limited, Pune	Shri Avinash Manjul Shri Gaurang Dabholkar (*Alternate*)
Malaviya National Institute of Technology, Jaipur	Dr Jyotirmay Mathur
Military Engineer Services, Engineer-in-Chief's Branch, Army HQ, New Delhi	Shri D. K. Tyagi Shri R. N. Sinha (*Alternate*)
Schneider Electric India Pvt Ltd, Gurugram	Dr Satish Kumar
Sterling India Consulting Engineers, New Delhi	Shri G. C. Modgil Ms Khushboo Modgil (*Alternate*)
Suvidha Engineers India Ltd, Noida	Shri Ashok K. Virmani Shri Sanjay Mookerjee (*Alternate*)

Organization	*Representative(s)*
The Institution of Engineers (India), Kolkata	Shri Pradeep Chaturvedi
UL India Pvt Ltd, Bengaluru	Shri V. Manjunath
Voltas Limited, New Delhi	Shri Ashwani Sharma Shri Pankaj Goel (*Alternate*)
In personal capacity (*C-9, 9511, Vasant Kunj, New Delhi 110070*)	Dr R. S. Agarwal
In personal capacity (*262, Solanipuram, Roorkee 247667*)	Dr P. K. Bhargava
In personal capacity (*435/6, New Adarsh Nagar, Roorkee 247667*)	Dr Ishwar Chand
In personal capacity, (*E 203, Belaire, Golf Course Road, Gurugram 122022*)	Shri Prabhat Goel

Panel for Acoustics, Sound Insulation and Noise Control, CED 46:P15

Organization	*Representative(s)*
Suri and Suri Consulting Acoustical Engineers, Noida	Shri Gautam Suri (***Convener***)
All India Radio, New Delhi	Shri Animesh Chakraborty Shri Jitender Pruthi (*Alternate*)
Central Public Works Department, New Delhi	Shri Rajesh Kumar Dhiman Shri Arun Kumar Tyagi (*Alternate*)
CSIR-Central Building Research Institute, Roorkee	Dr S. K. Panigrahi Dr B. M. Suman (*Alternate*)
CSIR-National Physical Laboratory, New Delhi	Dr Mahavir Singh Dr Naveen Garg (*Alternate*)
Indian Institute of Science, Bengaluru	Prof M. L. Munjal
Indian Institute of Technology Kharagpur, Kharagpur	Dr A. R. Mohanty
Indian Institute of Technology Madras, Chennai	Prof S. Narayanan Prof P. Chandramouli (*Alternate*)
Indian Institute of Technology Roorkee, Roorkee	Dr E. Rajasekar
Lloyd Insulations (India) Ltd, New Delhi	Shri N. Srinivas Shri Umesh Khanna (*Alternate*)
Military Engineer Services, Engineer-in-Chief's Branch, Army HQ, New Delhi	Shri A. K. Arora Shrimati Upinder Kaur (*Alternate*)
P. S. Subramanian Associates, Chennai	Dr S. Kandaswamy Dr P. Senthil Kumar (*Alternate*)
School of Planning and Architecture, New Delhi	Dr Shuvojit Sarkar
The Indian Institute of Architects, Mumbai	Shri Indra Nath Basu
The Institution of Engineers (India), Kolkata	Shri K. V. Chaubal Shri P. K. Adlakha (*Alternate*)
In personal capacity (*608/L-1, Solani Enclave, New Adarsh Nagar, Roorkee 247667*)	Shri R. K. Srivastava

Panel for Installation of Lifts and Escalators, CED 46:P16

Organization	*Representative(s)*
TAK Consulting Pvt Ltd, Mumbai	Shri T. A. K. Mathews (***Convener***)
Builders Association of India, Mumbai	Representative
Central Public Works Department, New Delhi	Shri Chaitanya Kumar Varma Shri Sham Sunder Garg (*Alternate*)
Electrical Inspectorate, Govt of NCT of Delhi, New Delhi	Shri Mukesh Kumar Sharma Shri Jogender Singh (*Alternate*)
Chief Electrical Inspectorate, Govt of Tamil Nadu, Chennai	Shri V. Jayavel Shri P. Manohar (*Alternate*)
Delhi Development Authority, New Delhi	Shri Sandeep Mehta Shri Navneet Kumar Mittal (*Alternate*)
Delhi Fire Service, Govt of NCT of Delhi, New Delhi	Shri A. K. Sharma Dr G. C. Misra (*Alternate*)

Organization	*Representative(s)*
Directorate of Maharashtra Fire Services, Mumbai	SHRI M. V. DESHMUKH SHRI SANTOSH WARICK (*Alternate*)
ECE Industries Limited, Ghaziabad	SHRI M. BALASUBRAMANIAN SHRI K. MOHAN (*Alternate*)
Fujitec India Pvt Ltd, Chennai	SHRI S. P. RAO SHRI R. RAJESH (*Alternate*)
Inspectorate of Lifts, Directorate of Electricity, Kolkata	REPRESENTATIVE
Johnson Lifts Pvt Ltd, Chennai	SHRI T. SUBRAMANIAN SHRI V. KARTHIKEYAN (*Alternate*)
Kone Elevator India Pvt Ltd, Chennai	SHRI P. M. TIPNIS SHRI P. GURUMOORTHY (*Alternate*)
Military Engineer Services, Engineer-in-Chief's Branch, Army HQ, New Delhi	SHRI D. K. TYAGI SHRI SUNIL AGARWAL (*Alternate*)
Otis Elevator Company (India) Limited, New Delhi	SHRI ABHIJIT DANDEKAR SHRI H. N. PRASHANTH (*Alternate*)
Public Works Department, Govt of Maharashtra, Mumbai	SHRI SANDEEP A. PATIL SHRI SANJAY BHASME (*Alternate*)
Schindler India Pvt Limited, Mumbai	SHRI NIMISH DESHPANDE SHRI RONNIE DANTE (*Alternate*)
TAK Consulting Pvt Ltd, Mumbai	MS ANANDI KHANDEKAR
The Indian Institute of Architects, Mumbai	SHRI J. B. KARAMCHANDANI SHRI VIJAY GARG (*Alternate*)
The Institution of Engineer (India), Kolkata	DR R. K. DAVE
In personal capacity (*K-33A, First Floor, Green Park, New Delhi 110016*)	SHRI S. K. DHERI
In personal capacity [*4, Vidharbha Samrat Co-op. Housing Society, 93 C, V. P. Road, Vile Parle (W) Mumbai 400056*]	SHRI A. S. HERWADKAR

Panel for Plumbing Services, CED 46:P17

Organization	*Representative(s)*
Indian Plumbing Association, New Delhi	SHRI B. S. ASWATHNARAYAN (B. S. A. NARAYAN) (***Convener***)
AECOM India Private Limited, Noida	SHRI B. V. SHIVA KUMAR
Brihan Mumbai Licensed Plumbers' Association, Mumbai	SHRI D. K. DAIYA SHRI B. M. SHAH (*Alternate*)
Central Ground Water Board, Faridabad	MEMBER (SML) REGIONAL DIRECTOR (*Alternate*)
Central Pollution Control Board, New Delhi	DR A. B. AKOLKAR DR SANJEEV AGRAWAL (*Alternate*)
Central Public Health and Environmental Engineering Organization, New Delhi	REPRESENTATIVE
Central Public Works Department, New Delhi	CHIEF ENGINEER (CSQ) SHRI RABINDRA KUMAR (*Alternate*)
CSIR-Central Building Research Institute, Roorkee	DR AJAY CHOURASIA SHRI IBRAHIM SOHEL (*Alternate*)
CSIR-National Environmental Engineering Research Institute, Nagpur	SHRI A. S. DUBEY SHRI M. KARTHIK (*Alternate*)
Delhi Development Authority, New Delhi	SHRI D. P. SINGH SHRI ANIL KUMAR TYAGI (*Alternate*)
Delhi Jal Board, New Delhi	CHIEF ENGINEER (CENTRAL & NORTH)
East Delhi Municipal Corporation, Delhi	SHRI VIJAY PRAKASH SHRI AJAY KUMAR MITTAL (*Alternate*)
Indian Plumbing Association, New Delhi	SHRI M. K. GUPTA SHRI H. R. RANGANATH (*Alternate*)

Organization	*Representative(s)*
Indraprastha Gas Limited, New Delhi	SHRI PANKAJ SHARMA SHRI AVIJIT NARAYAN (*Alternate*)
Military Engineer Services. Engineer-in-Chief's Branch. Army HQ, New Delhi	SHRI D. K. TYAGI SHRI JAYA PRAKASH (*Alternate*)
Municipal Corporation of Greater Mumbai. Mumbai	DEPUTY HYDRAULIC ENGINEER (PLANNING & CONTROL) EXECUTIVE ENGINEER (PLANNING & RESEARCH) (*Alternate*)
Nous Hospital Consultants Pvt Ltd, New Delhi	DR K. B. SOOD
Proion Consultants, New Delhi	SHRI SANDEEP GOEL
Tata Consulting Engineers Limited, Mumbai	SHRI DHEERAJ KAUSHIK
The Indian Institute of Architects, Mumbai	SHRI UDAY PANDE
The Institution of Engineers (India), Kolkata	SHRI P. C. TYAGI
In personal capacity (*B/58A, Gangotri Enclave, Alaknanda, New Delhi 110019*)	SHRI J. D'CRUZ
In personal capacity (*610, Technology Apartments, 24 Patparganj, New Delhi 110092*)	SHRI SUBIR PAUL

Panel for Landscaping, Signs and Outdoor Display Structures, CED 46:P18

Organization	*Representative(s)*
In personal capacity (*167/8, Sarai Julena, Okhla Road, New Delhi 110025*)	PROF M. SHAHEER (***Former Convener***)
Integral Designs International Studio Pvt Ltd, New Delhi	SHRI SAMIR MATHUR (***Convener***)
Central Public Works Department, New Delhi	SHRI RAJESH KUMAR DHIMAN SHRI ARUN KUMAR TYAGI (*Alternate*)
Delhi Development Authority, New Delhi	REPRESENTATIVE
Delhi Urban Arts Commission, New Delhi	SHRI SAMIR MATHUR SHRIMATI SONALI BHAGWATI (*Alternate*)
Housing & Urban Development Corporation Limited, New Delhi	SHRIMATI USHA PRASAD MAHAVIR SHRIMATI VARSHA PUNHANI (*Alternate*)
Indian Society of Landscape Architects, Ahmedabad	SHRI SACHIN JAIN MS SAVITA PUNDE (*Alternate*)
Institute of Town Planners, India, New Delhi	DR S. K. KULSHRESTHA
M. S. Y. K. Design, New Delhi	SHRI YOGESH KAPOOR
Municipal Corporation of Greater Mumbai, Mumbai	SHRIMATI MINAKSHI MANE SHRIMATI ASHLESHA MODAK (*Alternate*)
National Institute of Design, Ahmedabad	SHRI ANIL SINHA SHRI IMMANUEL SURESH (*Alternate*)
New Delhi Municipal Council, New Delhi	SHRI RAKESH GOEL
School of Planning and Architecture, New Delhi	PROF ROMMEL MEHTA
South Delhi Municipal Corporation, New Delhi	REPRESENTATIVE
The Indian Institute of Architects, Mumbai	SHRI MAHESH PALIWAL
The Institution of Engineers (India), Kolkata	PROF JITENDRA SINGH
The Maharaja Sayajirao University of Baroda, Vadodara	PROF S. R. RAVAL
Town and Country Planning Organization, Ministry of Urban Development, New Delhi	SHRIMATI JASMIN BIMRA MALLIK
In personal capacity (*D-198, Defence Colony, New Delhi 110024*)	SHRI RAVINDRA BHAN
In personal capacity (*874/4, Near Pundalik Temple, Alto Porvorim, Goa 403521*)	SHRIMATI VINITA VIJAYAN PUGAL

Panel for Sustainability, CED 46:P19

Organization	*Representative(s)*
AECOM India Private Limited, Noida	DR PREM C. JAIN (***Convener***)
AECOM India Private Limited, Noida	MS SANYUKTA PANDE
Ankoor Sanghvi Architects, Rajkot	SHRI ANKOOR SANGHVI

Organization	*Representative(s)*
Building Materials & Technology Promotion Council, New Delhi	Dr Shailesh Kumar Agrawal Shri J. K. Prasad (*Alternate*)
Bureau of Energy Efficiency, New Delhi	Shri Sanjay Seth
Central Public Works Department, New Delhi	Shri Mathura Prasad Shri Rajesh Khare (*Alternate*)
CEPT University, Ahmedabad	Shri Rajan Rawal
Confederation of Real Estate Developers' Association of India, New Delhi	Shri G. Yoganand Shri Hemant Dattaji Naiknavare (*Alternate*)
CSIR-Central Building Research Institute, Roorkee	Shri Yadvendra Pandey Dr Ashok Kumar (*Alternate*)
Delhi Development Authority, New Delhi	Engineer Member Shri Ashok Ghodeshwar (*Alternate*)
Design and Development, New Delhi	Shrimati Sheetal Rakheja
Indian Association of Structural Engineers, New Delhi	Dr Ravande Kishore Shri Manoj Mittal (*Alternate*)
Indian Buildings Congress, New Delhi	Shri P. Krishnan Shri P. S. Chadha (*Alternate*)
Indian Green Building Council, Hyderabad	Shri M. Anand Shri Punit Agarwal (*Alternate*)
Indian Institute of Science (Center for Sustainable Technologies), Bengaluru	Dr Monto Mani
Institute of Town Planners, India, New Delhi	Dr S. K. Kulshrestha
International Institute of Information Technology, Hyderabad	Dr Vishal Garg Dr Pradeep Kumar Ramancharla (*Alternate*)
Kaleidoscope, Noida	Shri Amor Kool
Karan Grover and Associates, Vadodara	Shri Karan Grover
Kone Elevator India Pvt Ltd, Chennai	Shri P. M. Tipnis Shri J. Sivaraman (*Alternate*)
Larsen & Toubro Limited, ECC Division, Chennai	Shri Rajan Venkateswaran Shri Sthaladipti Saha (*Alternate*)
Malaviya National Institute of Technology, Jaipur	Dr Jyotirmay Mathur Dr Sanjay Mathur (*Alternate*)
Military Engineer Services, Engineer-in-Chief's Branch, Army HQ, New Delhi	Shrimati Upinder Kaur Shri Mahesh Arjun Ruperee (*Alternate*)
Ministry of New and Renewable Energy, New Delhi	Dr A. K. Tripathi
Panika, Ahmedabad	Shri Nimish Patel Shrimati Parul Zaveri (*Alternate*)
Proion Consultants, New Delhi	Shri Sandeep Goel
School of Planning and Architecture, New Delhi	Dr V. K. Paul
Surat Municipal Corporation, Surat	Shri J. M. Patel Shri J. S. Shah (*Alternate*)
Sustainable Urbanism International, Bengaluru	Dr Jyoti Hosagrahar
The Energy and Resources Institute, New Delhi	Ms Mili Majumdar
The Indian Institute of Architects, Mumbai	Shri Prafulla Karkhanis Shri Abhijit Ray (*Alternate*)
The Institution of Engineers (India), Kolkata	Shri G. Prabhakar Shri B. Anantaramloo (*Alternate*)
Town and Country Planning Organization, Ministry of Urban Development, New Delhi	Shri Paresh Duria Dr Pawan Kumar (*Alternate*)
UL India Pvt Ltd, Bengaluru	Shri V. Manjunath Shri Puneet Randeo (*Alternate*)
In personal capacity [*Archana 105-B, Ambika Nagar, M. G. Road, Dombivali (W), Mumbai 421202*]	Shri Santosh Deodhar

Organization	*Representative(s)*
In personal capacity (*8th Floor, Flat No. 2, Tower 6, ATS-One Hamlet, Sector 104, Noida 201301*)	SHRI T. N. GUPTA
In personal capacity (*L/109, Sarita Vihar, New Delhi 110076*)	SHRI ASHOK KHURANA
In personal capacity (*102, Shraddha Temple Tree, Rustam Bagh, Bengaluru 560017*)	SHRI P. KRISHNAN
In personal capacity (*7A, Autumn Hue, Seasons PPD Apartments, Kuravankonam, Kowdiar, Thiruvananthapuram 695003*)	SHRI JOSE KURIAN
In personal capacity (*167/8, Sarai Julena, Okhla Road, New Delhi 110025*)	PROF M. SHAHEER
In personal capacity (*'Isa Vasyam' TC-18/1023, B-8/2-Lakshmi Nagar, Kesavadasapuram, Thiruvananthapuram 695004*)	SHRI V. SURESH

Panel for Glass and Glazing, CED 46:P20

Organization	*Representative(s)*
In personal capacity (*A2/16, Sri Agrasen Society, Plot No. 10, Sector 7, Dwarka, New Delhi 110075*)	SHRI R. N. DANDEKAR (***Convener***)
AECOM India Private Limited, Noida	SHRI VIJAY K. MATTOO SHRI SUNIL SHAHANI (*Alternate*)
Ahluwalia Contracts India Limited, New Delhi	SHRI PRADEEP KUMAR SHRI JASPAL SINGH RAWAT (*Alternate*)
All India Glass Manufacturers' Federation, New Delhi	SHRI SOMASUNDARAM SENTHIL SHRI RUPINDER SHELLY (*Alternate*)
Bureau of Energy Efficiency, New Delhi	REPRESENTATIVE
Central Public Works Department, New Delhi	SHRI MATHURA PRASAD
Confederation of Construction Products and Services, New Delhi	SHRI SHASHI KANT SHRI DEEPAK GAHLOWT (*Alternate*)
Creative Design Consultants & Engineers Pvt Ltd, Ghaziabad	SHRI AMAN DEEP SHRI BARJINDER SINGH GHAI (*Alternate*)
CSIR-Central Building Research Institute, Roorkee	DR ASHOK KUMAR SHRI S. K. NEGI (*Alternate*)
Delhi Development Authority, New Delhi	CHIEF ENGINEER (DESIGN) SHRI VIJAY SHANKER (*Alternate*)
Facade India Testing Inc, Thane	SHRI V. S. RAVI SHRI PRAVIN GAIKWAD (*Alternate*)
Glazing Society of India, Chennai	SHRI R. SUBRAMANIAN SHRI G. N. GOHUL DEEPAK (*Alternate*)
GSC Glass Ltd, Greater Noida	SHRI C. J. SINGH
Indian Association of Structural Engineers, New Delhi	SHRI S. C. MEHROTRA SHRI MAHESH TANDON (*Alternate*)
Indian Institute of Technology Madras, Chennai	DR S. ARUL JAYACHANDRAN
Indian Institute of Technology Roorkee, Roorkee	DR AVLOKITA AGRAWAL DR E. RAJASEKAR (*Alternate*)
Larsen & Toubro Limited, Chennai	SHRI STHALADIPTI SAHA
Meinhardt Facade Technology India Pvt Ltd, Chennai	SHRI MAHESH ARUMUGAM
Municipal Corporation of Greater Mumbai (Mumbai Fire Brigade), Mumbai	CHIEF FIRE OFFICER DEPUTY CHIEF FIRE OFFICER (*Alternate*)
NBCC (India) Limited, New Delhi	SHRI HEM RAJ SHRI H. S. YADAV (*Alternate*)
Saint-Gobain Glass India, Chennai	SHRI MANISH SRIVASTAVA SHRI N. MURALI (*Alternate*)
Schueco India Private Limited, Bengaluru	SHRI ANTONY JOHN SHRI PIYUSH KUMAR SRIVASTAVA (*Alternate*)
The Indian Institute of Architects, Mumbai	SHRI VIJAY GARG SHRI ASHUTOSH AGARWAL (*Alternate*)

Organization	*Representative(s)*
The Institution of Engineers (India), Kolkata	Shri P. K. Adlakha
Winwall Technology India Pvt Ltd, Chennai	Shri P. Jothi Ramalingam
In personal capacity (*K-33A, First Floor, Green Park, New Delhi 110016*)	Shri S. K. Dheri

Panel for Information and Communication Enabled Installations, CED 46:P21

Organization	*Representative(s)*
In personal capacity (*C-501, Shivam Apartments, Plot No. 14, Sector-12, Dwarka, New Delhi 110078*)	Shri A. K. Mittal (*Convener*)
Airports Authority of India, New Delhi	Shri D. K. Kamra Shri Vivek Chourey (*Alternate*)
Association of Unified Telecom Service Providers of India, New Delhi	Representative
Building Industry Consulting Service International - India District, Mumbai	Shri Ninad Mohan Desai
Cellular Operators Association of India, New Delhi	Shri Vikram Tiwathia Shrimati Vertika Misra (*Alternate*)
Central Industrial Security Force, New Delhi	Shri Naresh Kumar
Central Public Works Department, New Delhi	Shri Chaitanya Kumar Varma Shri D. K. Tulani (*Alternate*)
CMAI Association of India, New Delhi	Prof N. K. Goyal
Department of Telecommunication, Ministry of Communications, New Delhi	Shri V. K. Hirna Shri Arvind Chawla (*Alternate* 1) Shri Saurabh Chaturvedi (*Alternate* 2)
Gujarat International Finance Tec-City Company Limited, Gandhinagar	Shri Ramakant Jha Shri Nilesh Purey (*Alternate*)
Indian Buildings Congress, New Delhi	Shri Bhishma Kumar Chugh Shri P. S. Chadha (*Alternate*)
Internet Service Providers Association of India, New Delhi	Shri Brajesh Chandra Jain
Military Engineer Services, Engineer-in-Chief's Branch, Army HQ, New Delhi	Col R. Baijal
Ministry of Electronics & Information Technology, New Delhi	Dr Anil Kumar Kaushik Shri Prakash Kumar (*Alternate*)
Ministry of Railways, New Delhi	Shrimati Vinita Narera
Proion Consultants, New Delhi	Shrimati Shruti Goel
Roads and Buildings Department, Govt of Telangana, Hyderabad	Shri G. Ramakrishna Kumar Deputy Chief Engineer (*Alternate*)
Sterlite Technologies, Pune	Shri S. N. Gupta Shri Priyadarshi Sidhartha (*Alternate*)
Telecom System Design & Manufacturers Association, New Delhi	Shri Bhupesh Yadav Shri Rahul Dubey (*Alternate*)
The Indian Institute of Architects, Mumbai	Representative
The Institution of Engineers (India), Kolkata	Representative
Town and Country Planning Organization, Ministry of Urban Development, New Delhi	Shri K. K. Joadder Shri R. Srinivas (*Alternate*)
UBICO Networks Pvt Ltd, Gurugram	Shri Nitin Kohli
In personal capacity (*Pine 002, SJR Park Vista Apartments, Haralur Road, Bengaluru 560012*)	Shri J. N. Bhavani Prasad

Panel for Asset and Facility Management, CED 46:P22

Organization	*Representative(s)*
In personal capacity (*411, Sector A, Pocket C, Vasant Kunj, New Delhi 110070*)	Shri Krishna Kant (*Convener*)
Airports Authority of India, New Delhi	Shri D. K. Kamra Shri Vivek Chourey (*Alternate*)

Organization	*Representative(s)*
C. B. Richard Ellis, Gurugram	Shri Aneesh Kadyan
Central Industrial Security Force, New Delhi	Dr K. C. Wadhwa Shrimati Harpreet Kaur (*Alternate*)
Central Public Works Department, New Delhi	Shri Prabhakar Singh Shri Pramod Kumar Singh (*Alternate*)
Climaveneta Climate Technologies (P) Ltd, Bengaluru	Shri Anil Dev Shri Nitin Joshi (*Alternate*)
Cushman and Wakefield India Pvt Ltd, Gurugram	Shri Dinesh Wadehra Shri Sajit Sankar (*Alternate*)
DLF Home Developers Limited, Gurugram	Shri Gautam Dey
Honeywell International India Pvt Ltd, Gurugram	Shri Varun Jain
Indian Buildings Congress, New Delhi	Shri Deepak Narayan
Jones Lang Lasalle Meghraj Building Operations Pvt Ltd, Gurugram	Shri Sumit Rakshit
Medanta Medicity, Gurugram	Shri Sanjay Batra
Military Engineer Services, Engineer-in-Chief's Branch, Army HQ, New Delhi	Shri D. K. Tyagi Lt Col Gaurav Kaushik (*Alternate*)
National Council for Cement and Building Materials, Ballabgarh	Shri V. V. Arora Shri Brijesh Singh (*Alternate*)
Realty Automation and Security Systems Pvt Ltd, Pune	Shri Nitin Joshi
Security and Intelligence Services (India) Ltd, New Delhi	Shri Ritu Raj Sinha Brig (Retd) U. K. Dhar (*Alternate*)
In personal capacity (*H-43, Sector 39, Noida 201301*)	Shri Anil Kumar Arora
In personal capacity (*K-33A, First Floor, Green Park, New Delhi 110016*)	Shri S. K. Dheri
In personal capacity (*C-2/2324, Vasant Kunj, New Delhi 110070*)	Shri Chandra Pal
In personal capacity (*B-31, Manas Apartments, Mayur Vihar, Phase 1, Delhi 110091*)	Shri V. K. Sharma
In personal capacity (*D-39, Saket, New Delhi 110017*)	Shri Y. Taneja

Important Explanatory Note for Users of the Code

In any Part/Section of this Code, where reference is made to 'good practice' in relation to design, constructional procedures or other related information, and where reference is made to 'accepted standard' in relation to material specification, testing, or other related information, the Indian Standards listed at the end of the Part/Section shall be used as a guide to the interpretation.

At the time of publication, the editions indicated in the standards were valid. All standards are subject to revision and parties to agreements based on any Part/ Section are encouraged to investigate the possibility of applying the most recent editions of the standards.

In the list of standards given at the end of a Part/Section, the number appearing within parentheses in the first column indicates the number of the reference of the standard in the Part/Section. For example:

a) Good practice [3(2)] refers to the Indian Standard given at serial number (2) of the list of standards given at the end of Part 3, that is, IS 4878:1986 'Byelaws for construction of cinema buildings (*first revision*)'.

b) Good practice [4(6)] refers to the Indian Standard given at serial number (6) of the list of standards given at the end of Part 4, that is, IS 1646:2015 'Code of practice for fire safety of buildings (General):Electrical installations (*third revision*)'.

c) Good practice [6-1(5)] refers to the Indian Standard given at serial number (5) of the list of standards given at the end of Section 1 of Part 6, that is, IS 15498:2004 'Guidelines for improving the cyclonic resistance of low rise houses and other buildings/structures'.

d) Accepted standard [6-2(6)] refers to the Indian Standard given at serial number (6) of the list of standards given at the end of Section 2 of Part 6, that is, IS 1498:1970 'Classification and identification of soils for general engineering purposes (*first revision*)'.

e) Accepted standards [6-5A(18)] refers to the Indian Standards given at serial number (18) of the list of standards given at the end of Subsection 5A of Part 6, that is, IS 516:1959 'Method of test for strength of concrete' and IS 5816:1999 'Method of test for splitting tensile strength of concrete (*first revision*)'.

f) Accepted standard [6-5B(20)] refers to the Indian Standard given at serial number (20) of the list of standards given at the end of Subsection 5B of Part 6, that is, IS 9103:1999 'Specification for admixtures for concrete (*first revision*)'.

INFORMATION FOR THE USERS ABOUT AVAILABILITY OF THE CODE IN GROUPS

For the convenience of the users, the National Building Code of India 2016 is available as a comprehensive volume as well as in the following five groups, each incorporating the related Parts/Sections dealing with particular area of building activity:

Group 1	**For Development/ Building Planning and Related Aspects**	Part 0	Integrated Approach — Prerequisite for Applying Provisions of the Code
		Part 1	Definitions
		Part 2	Administration
		Part 3	Development Control Rules and General Building Requirements
		Part 4	Fire and Life Safety
		Part 5	Building Materials
		Part 10	Landscape Development, Signs And Outdoor Display Structures
			Section 1 Landscape Planning, Design and Development
			Section 2 Signs and Outdoor Display Structures
		Part 11	Approach to Sustainability
Group 2	**For Structural Design and Related Aspects**	Part 0	Integrated Approach — Prerequisite for Applying Provisions of the Code
		Part 6	Structural Design
			Section 1 Loads, Forces and Effects
			Section 2 Soils and Foundations
			Section 3 Timber and Bamboo
			3A Timber
			3B Bamboo
			Section 4 Masonry
			Section 5 Concrete
			5A Plain and Reinforced Concrete
			5B Prestressed Concrete
			Section 6 Steel
			Section 7 Prefabrication, Systems Building and Mixed/ Composite Construction
			7A Prefabricated Concrete
			7B Systems Building and Mixed/ Composite Construction
			Section 8 Glass and Glazing
		Part 11	Approach to Sustainability
Group 3	**For Aspects Relating to Construction, and Asset/ Facility Management**	Part 0	Integrated Approach — Prerequisite for Applying Provisions of the Code
		Part 7	Construction Management, Practices and Safety
		Part 11	Approach to Sustainability
		Part 12	Asset and Facility Management
Group 4	**For Aspects Relating to Building Services**	Part 0	Integrated Approach — Prerequisite for Applying Provisions of the Code
		Part 8	Building Services
			Section 1 Lighting and Natural Ventilation
			Section 2 Electrical and Allied Installations
			Section 3 Air Conditioning, Heating and Mechanical Ventilation
			Section 4 Acoustics, Sound Insulation and Noise Control
			Section 5 Installation of Lifts, Escalators and Moving Walks
			5A Lifts
			5B Escalators and Moving Walks
			Section 6 Information and Communication Enabled Installations
		Part 11	Approach to Sustainability
Group 5	**For Aspects Relating to Plumbing Services and Solid Waste Management**	Part 0	Integrated Approach — Prerequisite for Applying Provisions of the Code
		Part 9	Plumbing Services (including Solid Waste Management)
			Section 1 Water Supply
			Section 2 Drainage and Sanitation
			Section 3 Solid Waste Management
			Section 4 Gas Supply
		Part 11	Approach to Sustainability

The information contained in different groups will serve the concerned professionals dealing with the respective areas. However, it is advisable that professionals essentially dealing with any of the above groups should also refer the other groups.

NATIONAL BUILDING CODE OF INDIA

PART 0 INTEGRATED APPROACH — PREREQUISITE FOR APPLYING PROVISIONS OF THE CODE

BUREAU OF INDIAN STANDARDS

CONTENTS

FOREWORD ... 3

1 SCOPE ... 5
2 TERMINOLOGY ... 5
3 GENERAL ... 5
4 TEAM APPROACH ... 5
5 PLANNING, DESIGNING AND DEVELOPMENT ... 6
6 CONSTRUCTION/EXECUTION (ACTUALIZATION) ... 8
7 OPERATION, MAINTENANCE, DECOMMISSIONING AND DECONSTRUCTION ... 8

ANNEX A BRIEF DETAILS OF THE COVERAGE OF VARIOUS PROVISIONS UNDER DIFFERENT PARTS/SECTIONS OF THE CODE ... 9

FOREWORD

This Code (Part 0) covers guidclines to be followed for judicious implementation of the provisions of various Parts/Sections of the National Building Code of India following an integrated approach.

In order to provide safe, healthy and sustainable habitat, careful consideration needs to be paid to the building construction activity. Building planning, designing and construction activities have developed over the centuries. Large number of ancient monuments and historical buildings all over the world bear testimony to the growth of civilization from the prehistoric era with the extensive use of manual labour and simple systems as appropriate to those ages to the present day mechanizcd and electronically controlled operations for designing and constructing buildings and for operating and maintaining systems and services. In those days, buildings were conceptualized and built by master builders with high levels of artisan skills. Technological and socio-economic developments in recent times have led to remarkable increase in demand for more and more sophistication in buildings resulting in ever increasing complexities. These perforce demand high levels of inputs from professionals of different disciplines such as architecture, civil engineering, structural engineering, functional and life safety services including special aspects relating to utilities, landscaping, etc, in conceptualization, spatial planning, design and construction of buildings of various material and technology streams, various services including operation, maintenance, repairs and rehabilitation aspects throughout the service life of the building.

This Code, besides prescribing various provisions, also allows freedom of action to adopt appropriate practices and provides for building planning, designing and construction for absorbing traditional practices as well as latest developments in knowledge in the various disciplines as relevant to a building including computer aided and/or other modern sensors aided activities in the various stages of conceptualization, planning, designing, constructing, maintaining and repairing the buildings. India being a large country with substantial variations from region to region, this Code has endeavoured to meet the requirements of different regions of the country, both urban and rural, by taking into consideration factors such as climatic and environmental conditions, geographical terrain, vulnerability to natural disasters, ecologically appropriate practices, use of eco-friendly materials, use of appropriate conventional and alternative technologies, reduction of pollution, protection and improvcment of local environment and also socio-economic considerations, towards the creation of sustainable human settlements.

This Part of the Code dealing with 'integrated approach' gives an overall direction for practical applications of the provisions of different specialized aspects of spatial planning, designing and construction of buildings, creation of services, and proposes an integrated approach for utilizing appropriate knowledge and experience of qualified professionals, right from the conceptualization through construction and completion stages of a building project and indeed during the entire life cycle. The 'integrated approach' should not only take care of functional, aesthetic and safety aspects, but also the operational and maintenance requirements. Also, cost optimization has to be achieved through proper selection of materials, techniques, equipment installations, etc. Further, value engineering and appropriate management techniques should be applied to achieve the aim set forth for the purpose of construction of a building fully meeting the specified and implied needs of spatial functions, user requirements, safety and durability aspects, life and health safety, comfort, services, etc, in the building. Integration among various professionals/services may be facilitated by use of appropriate software, systems, tools, simulations, etc.

The aim of the 'integrated approach' is to get the maximum benefit from the building and its services in terms of objectives such as quality, timeliness and cost-effectiveness. In the team approach which is an essential pre-requisite for integrated approach, the aim clearly is to maximize the efficiency of the total system through appropriate optimization of each of its sub-systems, and ensuring coordination among various disciplines and agencies that are involved during planning, design, construction, operation and maintenance of buildings and the associated infrastructure. In other words, in the team, the timely inputs from each of the professional disciplines have to be so optimized that the total system's efficiency becomes the maximum. It may be emphasized that maximizing the efficiencies of each sub-system may not necessarily assure the maximization of the efficiency of the total system. It needs hardly to be stated that specified or implied safety will always get precedence over functional efficiency

and economy. Further, progressive approach such as that relating to the concept of intelligent buildings would be best taken care of by the 'integrated approach' as laid down in this Part.

The continued effort towards development may progressively be aimed at leading us to achieve better and smarter solutions, such as through development of smart cities encompassing sustainability apart from utilizing optimum resources and delivering through intelligent ways, the various facilities and amenities. The integrated approach enshrined in this Part is of immense help in achieving the objective of such smart buildings and cities. It goes without saying that the objective of sustainable development as professed in Part 11 'Approach to Sustainability' of the Code can be best achieved through such an integrated approach.

Proper construction management and certification covering the various dimensions brought out above may go a long way in achieving the above goal of real integrated approach.

This Part was first introduced in 2005 as an adjunct to various other Parts/Sections of the Code. Based on the experience gained in the use of this Part, this revision has been brought out. The significant modifications incorporated in this revision include the following:

a) List of professionals who may be part of multi-disciplinary teams has been updated.
b) Considering the latest provisions relating to construction project management now included in the Part 7 'Construction Management, Practices and Safety' of the Code, the provisions in this Part relevant to construction project management functions have been accordingly updated.
c) Various considerations to be taken care of by the design teams, project/construction management team, and operation and maintenance team have been further reinforced considering the present day requirements and expectations from buildings and built environment.
d) Provisions relating to operation and maintenance have been further extended to include decommissioning and deconstruction (including demolition) to give importance to planned decommissioning and deconstruction after the useful service life of the built facility is over.
e) With the introduction of the new Part 11 'Approach to Sustainability' of the Code, appropriate references to sustainability wherever relevant to the integrated approach, have been taken care of.
f) Accessibility and universal design for ensuring barrier free environment for persons with disabilities has been emphasized by further reinforcing the provisions to this effect appropriately.
g) Annex A giving brief details of the coverage of various provisions under different Parts/Sections of the Code, has been updated, considering modification in the scopes of existing Parts/Sections and inclusion of new Parts/Sections.

NATIONAL BUILDING CODE OF INDIA

PART 0 INTEGRATED APPROACH — PREREQUISITE FOR APPLYING PROVISIONS OF THE CODE

1 SCOPE

This Code (Part 0) covers guidelines to be followed for judicious implementation of the provisions of various Parts/Sections of the National Building Code of India following an integrated approach.

2 TERMINOLOGY

For the purpose of this Part, the following definitions shall apply.

2.1 Authority Having Jurisdiction — The authority which has been created by a statute and which, for the purpose of administering the Code/Part, may authorize a committee or an official or an agency to act on its behalf; hereinafter called the 'Authority'.

2.2 Building — Any structure for whatsoever purpose and of whatsoever materials constructed and every part thereof whether used as human habitation or not and includes foundation, plinth, walls, floors, roofs, chimneys, plumbing and building services, fixed platforms, verandah, balcony, cornice or projection, part of a building or anything affixed thereto or any wall enclosing or intended to enclose any land or space and signs and outdoor display structures. Tents/ *Shamianahs/Pandals*, tarpaulin shelters, etc, erected for temporary and ceremonial occasions shall not be considered as building.

2.3 Owner — A person, a group of persons or a body having a legal interest in land and/or building thereon. This includes freeholders, leaseholders or those holding a sublease, who will have legal right to occupation and have liabilities in respect of safety or building condition.

In the case of lease or sublease holders, as far as ownership with respect to the structure is concerned, the structure of a flat or structure on a plot belongs to the allottee/lessee till the allotment/lease subsists.

NOTE — For the purpose of the Code, the word 'owner' will also cover the generally understood terms like 'client', 'user', etc.

3 GENERAL

3.1 Buildings shall be classified as Residential, Educational, Institutional, Assembly, Business, Mercantile, Industrial, Storage and Hazardous in groups and sub-divisions as classified in Part 4 'Fire and Life Safety' of the Code.

For various related provisions of buildings with respect to administration; development control rules and general building requirements; building materials; fire and life safety; structural design; construction management, practices and safety; building and plumbing services; landscape development, signs and outdoor display structures; sustainability; asset and facility management. and other Parts/Sections of the Code may be referred to. For provisions on sustainability of buildings and built environment, reference to the concerned Part may be made, which while also referring to the other Parts/Sections as may be required, gives a comprehensive approach to sustainability.

3.2 The brief coverage in various Parts/Sections of the Code which cover detailed provisions on different aspects of development of land/building construction activity, are given in Annex A, with a view to providing an overview for the users of the Code.

4 TEAM APPROACH

4.1 A land development/building project and the built facility during its service life comprises the following major stages:

a) Location/siting,
b) Conceptualization and planning,
c) Designing and detailing,
d) Construction/execution,
e) Operation and maintenance, and
f) Decommissioning and deconstruction.

Each stage necessarily requires professionals of many disciplines who should work together as a well coordinated team to achieve the desired product delivery with quality and safety and other objectives, in an effective manner.

Appropriate multi-disciplinary teams (*see* **4.1.1** to **4.1.3**) need to be constituted to successfully meet the requirements of different stages. Each team may comprise need based professionals out of the following depending upon the nature, magnitude and complexity of the project:

1) Architect;
2) Civil engineer;
3) Structural engineer;
4) Geotechnical engineer;
5) Electrical engineer;
6) Plumbing engineer;

7) Fire protection engineer;
8) Heating, ventilation and air conditioning engineer;
9) Lift, escalator and moving walk specialist;
10) Acoustics specialist;
11) Information/communication technology engineer;
12) Health, safety and environment specialist;
13) Environment/sustainability specialist;
14) Town planner;
15) Urban designer;
16) Landscape architect;
17) Security system specialist;
18) Interior designer;
19) Quantity surveyor;
20) Project/construction manager;
21) Accessibility and universal design specialist;
22) Asset/facility manager; and
23) Other subject specialist(s).

It is important that leaders and members of design team, project management/construction management team, and operation and maintenance team, depending on the size and complexity of the project, are carefully selected considering their qualification, experience and expertise in these fields.

4.1.1 *Design Team*

In building projects, various aspects like form; space planning; aesthetics; fire and life safety; structural adequacy; plumbing services; lighting and natural ventilation; electrical and allied installations; air conditioning, heating and mechanical ventilation; acoustics, sound insulation and noise control; installation of lifts and escalators; building automation; data and voice communication; other utility services installations; landscape planning, design and development; urban planning; etc need to be kept in view right at the concept stage. The project requiring such multi-disciplinary inputs need a coordinated approach among the professionals for proper integration of various design inputs. For this, and to take care of the complexities of multi-disciplinary requirements, a design team of professionals from the required disciplines shall be constituted at the appropriate stage. Here, it is desirable that the multi-disciplinary integration is initiated right from the concept stage. The team shall finalize the plan. The composition of the team shall depend on the nature, magnitude and complexities of the project. Design is an evolutionary and participatory process, where participation of the owner constitutes a very important input at all stages, and the same shall be ensured by the design team.

To ensure proper implementation of the design, the design team, may be associated during the construction/ execution stage.

4.1.2 *Project Management and Construction Management Teams*

The objective of project management or construction management is primarily to achieve accomplishment of a project in accordance with the designs and specifications in a stipulated time and cost framework, etc, with a degree of assurance prior to commencement and satisfaction on completion and commissioning.

For large projects, separate teams of experienced professionals from the required disciplines may be constituted for project management (including planning and scheduling) and for construction management depending upon the complexities of the project. However, for smaller projects these teams may be combined. The teams shall be responsible for day-to-day execution, supervision, quality control, etc, and shall ensure inter-disciplinary coordination during the construction stage. The team shall be responsible to achieve satisfactory completion of the project in respect of all relevant project management functions like cost, time, quality, safety, etc. Some members of the design team may also be included in the project management team and/or associated actively during the project execution stage.

4.1.3 *Operation and Maintenance Team*

Operation, maintenance and repairs also require a multi-disciplinary approach to ensure that all the requirements of the users are satisfactorily met. During maintenance and repairs, the jobs requiring inter-disciplinary coordination have to be executed in such a manner as not only to cause least inconvenience to the user but also to ensure that there is no mismatch or damage to the structure, finishing, fittings and fixtures, and to preserve the integrity of other services. For carrying out routine maintenance/repair jobs, utilization of the services of trained technicians preferably having multi-disciplinary skills should be encouraged.

Special repairs, rehabilitation and retrofitting are specialized jobs which demand knowledge of the existing structure/installations. Association of concerned specialists may be helpful for these works.

The operation and maintenance team may also be known as asset and facility management or estate management team.

5 PLANNING, DESIGNING AND DEVELOPMENT

5.1 The main functions of design team (*see* **4.1.1**) constituted for the planning, designing and development, are as under:

a) Formalization of design brief in consultation with the owner.

b) Site survey and soil investigation.

c) Preparation of alternative concept designs, highlighting both their positive and negative aspects.

d) Selection of a concept in consultation with and with the consent of the owner.

e) Sizing the system.

f) Development of design, involving:

   1) Integration of architecture, structure and services,

   2) Synthesis of requirements of each discipline, and

   3) Interaction with each other within the design team and with the owner.

g) Preparation of preliminary designs and drawings and obtaining the owners' approval.

h) Preparation of preliminary cost estimates for approval of owner.

j) Preparation of work-breakdown structure and programme for pre-construction activities.

k) Assisting client to obtain approvals of the Authority/authorities.

m) Preparation of detailed specifications and construction working drawings with integration of engineering inputs of all concerned disciplines.

n) Preparation of detailed design of each discipline for various services.

p) Peer review/proof checking of the drawings/ designs in case of major/important projects, depending upon their complexity and sensitivity.

q) Preparation of detailed cost estimate.

r) Obtaining final approval of the client.

s) Preparation of bill of quantities, specifications and tender documents.

5.2 The following considerations, as may be applicable to the project, may be considered during planning, notwithstanding the other relevant aspects specifically prescribed in concerned Parts/Sections of this Code: these considerations in general are with the objective of addressing important issues like environmental protection, energy conservation, cultural issues, creating barrier free built-environment, safety aspects, etc, all of these leading towards sustainable development, and have to be applied with due regard to the specific requirements of size and type of project:

1) Geoclimatic, geological and topographical features.

2) Geotechnical considerations with respect to soil/rock, water table, etc.

3) Varied sociological pattern of living in the country.

4) Effective land use to cater to the needs of the society in a most convenient manner.

5) Modular planning and standardization to take care of future planning giving due consideration to the specified planning controls.

6) Emphasis on daylight utilization, natural ventilation, shielding, and window area and disposition; daylighting to be supplemented with an integrated design of artificial lighting.

7) Optimum utilization of renewable energy sources duly integrated in the overall energy system design; with consideration of active and passive aspects in building design including thermal performance of building envelope.

8) Rain water harvesting, integrated water management including recycle and reuse, etc.

9) Use of appropriate building materials considering aspects like energy consumption in production, transportation and utilization, recyclability, etc, and for deconstruction, for promoting sustainable development.

10) Requisite mandatory provisions for persons with disabilities.

11) Acoustical controls for buildings and the surroundings.

12) Promotion of artwork in buildings, especially, major/important buildings.

13) Due cognizance of recommendations of the Archaeological Survey of India with regard to national monuments and construction in archaeologically important sites.

14) Due cognizance of relevant provisions applicable to coastal regulation zone.

15) Conservation of heritage structures and areas, with due consideration to the concerns of the archaeological departments.

16) Environmental and social impact analysis.

17) Design of services with emphasis on aspects of energy efficiency, environment friendliness and maintainability.

18) Integrated waste management.

19) Voice and data communication, automation of building services, and intelligent building; use of security and surveillance system in important and sensitive buildings, such as access control for the people as well as for vehicle.

20) Interlinking of fire alarm system, fire protection system, security system, ventilation, electrical systems, etc.

21) Analysis of emergency power, standby power requirement and captive power systems.

22) Cost optimization through techniques like value engineering.

23) Adoption of innovative technologies giving due consideration to constructability and quality aspects.

24) Instrumentation of building, monitoring and use of information so generated to effect improvements in planning and design of future building projects, and use of such instrumentation to monitor any adverse effect on the building as well as neighbouring buildings.

6 CONSTRUCTION/EXECUTION (ACTUALIZATION)

6.1 The main functions of the teams (*see* **4.1.2**) constituted for Project Management/Construction Management may be to,

a) specify criteria for selection of constructors;

b) specify quality control, quality audit system and safety system;

c) short-list constructors;

d) have pre-bid meetings with the intending constructors;

e) receive and evaluate tenders;

f) select constructors;

g) execution and supervision;

h) monitor for quality, time and cost control and for other project management functions;

j) prepare/certify the completion (as-built) drawings;

k) assist in getting statutory approvals at various stages; and

m) ensure availability of operation manuals for field use.

6.2 Apart from the specific provisions laid down in the concerned Parts/Sections of the Code, the following considerations, as may be applicable to the project concerned, shall be given due attention:

a) Adopting scientific principles of construction project management, including quality, cost, time, and safety management.

b) Engagement of executing and supervising agencies, which meet the specified norms of skills, specialization, experience, resourcefulness, etc, for the work.

c) Ensuring inter-disciplinary coordination during construction.

d) Contract management and techno-legal aspects.

e) Completion, commissioning and trial run of installations/equipment and their operation and maintenance through the suppliers/other teams, where necessary.

f) Make available shop drawings as well as as-built drawings for the building and services.

g) Arrange all maintenance and operation manual from the concerned suppliers/manufacturers.

6.3 The team of professionals (*see* **4.1.2**) shall work and monitor the project activities for successful construction/execution of the project with regard to various construction project management functions, particularly, time, cost, quality and safety.

7 OPERATION, MAINTENANCE, DE-COMMISSIONING AND DECONSTRUCTION

7.1 The team of professionals (*see* **4.1.3**) shall set up a system of periodic maintenance and upkeep of constructed buildings.

7.2 The operation and maintenance team shall be responsible for preparation/application of operation and maintenance manual, and draw maintenance schedule/ frequencies and guidelines for maintenance personnel. Apart from the specific provisions laid down in concerned Parts/Sections of the Code, the following, as may be applicable to the project concerned, shall additionally be taken into account:

a) Periodic validation of buildings by competent professionals through inspection of the buildings in respect of structural safety and safety of electrical and other installations and ensuring that all fire safety equipment/systems are in proper working condition.

b) Periodic accessibility audits to ensure that the buildings remain universally accessible and barrier free for persons with disabilities.

c) Preparation of predictive/preventive maintenance schedules for all installations in the building and strictly following the same; the record of the preventive maintenance to be properly kept.

d) Ensuring inter-disciplinary coordination during operation and maintenance, and repairs; deployment of trained personnel with multi-disciplinary skills to be encouraged.

e) Condition survey of structures and installations, identification of distress of various elements and initiating plans for rehabilitation/ retrofitting well in time. Post-disaster investigations by competent engineer/specialist.

7.3 The proposals for rehabilitation/retrofitting should be prepared after detailed investigations through visual inspection, maintenance records and testing as required and got executed through specialized agencies under the guidance and supervision of competent professionals. For further details and good practices regarding the same, reference shall be made to Part 7 'Construction Management, Practices and Safety' of the Code.

7.4 After the useful service life of a building is over, or for other reasons such as redevelopment and proposed change in use of the land and built facility, it may be required to deconstruct a building. Such a deconstruction is preceded by an organized decommissioning. The decommissioning and deconstruction needs to be well planned and coordinated among concerned building professionals so as to ensure safety during such operations, as also retrieval of appropriate products, components and systems, for their possible reuse or recycling, or disposal as may be appropriate. This may in turn require a comprehensive decommissioning and deconstruction (including demolition) plan, which may be prepared during the initial stages of the project and kept available for use at the end of life cycle of the same.

ANNEX A

(*Clause* 3.2)

BRIEF DETAILS OF THE COVERAGE OF VARIOUS PROVISIONS UNDER DIFFERENT PARTS/SECTIONS OF THE CODE

A-1 PART 1 DEFINITIONS

It lists the terms appearing in all the Parts/Sections of the National Building Code of India. However, some common definitions are reproduced in this Part also.

A-2 PART 2 ADMINISTRATION

It covers the administrative aspects of the Code, such as applicability of the Code, organization of building department for enforcement of the Code, procedure for obtaining development and building permits, and responsibility of the owner and all professionals involved in the planning, design and construction of the building.

A-3 PART 3 DEVELOPMENT CONTROL RULES AND GENERAL BUILDING REQUIREMENTS

It covers the development control rules and general building requirements for proper planning and design at the layout and building level to ensure health safety, public safety and desired quality of life. It also covers requirements for accessibility in buildings and built environment for elders and persons with disabilities.

A-4 PART 4 FIRE AND LIFE SAFETY

It covers the requirements for fire prevention, life safety in relation to fire, and fire protection of buildings. It also specifies occupancy-wise classification, constructional aspects, egress requirements and protection features that are necessary to minimise danger to life and property from fire.

A-5 PART 5 BUILDING MATERIALS

It covers the requirements of building materials and components, and criteria for accepting new or alternative building materials and components.

A-6 PART 6 STRUCTURAL DESIGN

This Part through its eight Sections provides for structural adequacy of buildings to deal with both internal and external environment, and provides guidance to engineers/structural engineers for varied usage of material/technology types for building design.

A-6.1 Section 1 Loads, Forces and Effects

It covers basic design loads to be assumed in the design of buildings. The imposed loads, wind loads, seismic forces, snow loads and other loads, which are specified therein, are minimum working loads which should be taken into consideration for purposes of design.

A-6.2 Section 2 Soils and Foundations

It covers geotechnical design (principles) of building foundations, such as shallow foundations, like, continuous strip footings, combined footings, raft foundations, deep foundations like pile foundations and other foundation systems to ensure safety and serviceability without exceeding the permissible stresses of the materials of foundations and the bearing capacity of the supporting soil/rock. It also covers provisions relating to preliminary work required for

construction of foundations and protection of excavation.

A-6.3 Section 3 Timber and Bamboo

A-6.3.1 *Section 3A Timber*

It covers the general principles involved in the design of structural timber in buildings, including elements of structures connected together by fasteners/fastening techniques.

A-6.3.2 *Section 3B Bamboo*

It covers the general principles involved in the design of structural bamboo in buildings with regard to mechanical resistance and durability of structures. It also covers design of both bamboo (round bamboo, split bamboo, glued laminated bamboo) and bamboo-based panels joined together with adhesives or mechanical fasteners. It also covers minimum strength data, dimensional stability, grading requirements and traditional bamboo joints for quality assurance. Constructional aspects using bamboo, such as, work on site, fabrication of components off-site and their erection on site are also covered to the extent necessary to indicate and ensure the quality of material and standard of workmanship to comply with the assumptions of the design rules and the limitations.

A-6.4 Section 4 Masonry

It covers the structural design aspects of unreinforced load bearing and non-load bearing walls, constructed with masonry units permitted therein. It also deals with the selection of materials, special features of design and construction for masonry construction using rectangular masonry units and covers guidelines regarding earthquake resistant buildings constructed using masonry of low strength. It also covers provisions for design of reinforced brick and reinforced brick concrete floors and roofs. It also gives the recommendations for structural design aspects of reinforced load bearing and non-load bearing walls, constructed with different types of bricks and blocks.

A-6.5 Section 5 Concrete

A-6.5.1 *Section 5A Plain and Reinforced Concrete*

It covers the general structural use of plain and reinforced concrete.

A-6.5.2 *Section 5B Prestressed Concrete*

It covers the general structural use of prestressed concrete. It covers both work carried out on site and the manufacture of precast prestressed concrete units.

A-6.6 Section 6 Steel

It covers the structural design aspects of steel structures in buildings. It applies to general construction using hot rolled steel sections and steel tubes, joined using riveting, bolting and welding.

A-6.7 Section 7 Prefabrication, Systems Building and Mixed/Composite Construction

A-6.7.1 *Section 7A Prefabricated Concrete*

It covers recommendations regarding modular planning, component sizes, prefabrication systems, design considerations, joints and manufacture, storage, transport and erection of prefabricated concrete elements for use in buildings and such related requirements for prefabricated concrete

A-6.7.2 *Section 7B Systems Building and Mixed/ Composite Construction*

It covers recommendations regarding modular planning, component sizes, joints, manufacture, storage, transport and erection of prefabricated elements for use in buildings and such related requirements for systems building and mixed/composite construction.

A-6.8 Section 8 Glass and Glazing

It covers the following:

a) Selection and application of glass in buildings, different types of glass, their requirements and associated glazing materials.
b) Guiding provision for glazing in buildings with respect to their effect on energy, visual (light) and solar environments in the building.
c) Selection of glass in buildings, subject to wind loading, seismic loading and special considerations for fire rated glass and related materials.
d) Provisions for the selection of and manifestation on glass used in buildings, subject to safety with respect to human impact on the occupants.
e) Provisions relating to glazing systems such as selection, design, fabrication, installation, testing and maintenance.

A-7 PART 7 CONSTRUCTION MANAGEMENT, PRACTICES AND SAFETY

It covers construction project management; construction planning, site management and building construction practices; storage, stacking and handling of materials; and safety of personnel during construction operations for all elements of a building and demolition of buildings; and habitat and welfare

requirements for workers. It also covers guidelines relating to repairs, retrofitting and strengthening of buildings.

A-8 PART 8 BUILDING SERVICES

This Part through its six elaborate Sections on utilities provides detailed guidance to concerned professionals/ utility engineers for meeting necessary functional requirements in buildings.

A-8.1 Section 1 Lighting and Natural Ventilation

It covers requirements and methods for lighting and natural ventilation of buildings.

A-8.2 Section 2 Electrical and Allied Installations

It covers the essential requirements for electrical installations in buildings to ensure efficient use of electricity including safety from fire and shock. It also includes general requirements relating to lightning protection of buildings and brief provisions on certain allied installations.

A-8.3 Section 3 Air Conditioning, Heating and Mechanical Ventilation

It covers the planning, design considerations, installation, testing, commissioning and handing over and also operation and maintenance of air conditioning, heating and mechanical ventilation systems for buildings. It also covers refrigeration for cold storages.

A-8.4 Section 4 Acoustics, Sound Insulation and Noise Control

It covers requirements and guidelines regarding planning against noise, acceptable noise levels and the requirements for sound insulation in buildings with different occupancies.

A-8.5 Section 5 Installation of Lifts, Escalators and Moving Walks

A-8.5.1 *Section 5A Lifts*

It covers the requirements for planning, design, installation, operation, maintenance and inspection of lifts (passenger lifts, goods lifts, hospital lifts, service lifts and dumb waiter) so as to ensure safe movement of people with satisfactory performance.

It also gives information that should be exchanged among the architect/engineer, the consulting engineer and the lift manufacturer from the stage of planning to installation including maintenance.

A-8.5.2 *Section 5B Escalators and Moving Walks*

It covers the essential requirements for planning, installation, operation, maintenance and inspection of escalators and moving walks so as to ensure safe movement of people with satisfactory performance, while using these.

It also gives information that should be exchanged among the architect/engineer, the consulting engineer and the escalator/moving walk manufacturer from the stage of planning to installation including maintenance.

A-8.6 Section 6 Information and Communication Enabled Installations

It covers the essential requirements for information and communication enabled installations, technology systems and related cabling installations in a building. It also covers the basic design and integration requirements for telecommunication spaces within the building/buildings along with their cabling infrastructure, their pathway components and passive connectivity hardware.

It also includes general requirements relating to installation of different communication equipment, cable terminations, power connections and general guidelines required for planning and providing information and communication technology (ICT) services in the building at the planning and execution stages. The provisions given herein are basic requirements applicable to all residential and other buildings.

A-9 PART 9 PLUMBING SERVICES (INCLUDING SOLID WASTE MANAGEMENT)

This Part through its four Sections gives detailed guidance to concerned professionals/plumbing engineers with regard to plumbing and other related requirements in buildings including solid waste management.

A-9.1 Section 1 Water Supply

It covers the basic requirements of water supply for residential, business and other types of buildings, including traffic terminal stations. It also deals with general requirements of plumbing connected to public water supply and design of water supply systems along with general guidelines about expansion in piping systems, and swimming pools.

A-9.2 Section 2 Drainage and Sanitation

It covers the design, 'ayout, construction and maintenance of drains for foul water, surface water, subsoil water and sewage; together with all ancillary works, such as connections, manholes and inspection chambers used within the building and from building to the connection to a public sewer, private sewer, individual sewage-disposal system, cesspool, soakaway or to other approved point of disposal/ treatment work.

A-9.3 Section 3 Solid Waste Management

It covers the provisions relating to solid waste management systems, assessment of per capita solid waste quantities and treatment of solid waste quantities and treatment of solid waste within the building, building complexes and their built environment.

A 9.4 Section 4 Gas Supply

It covers the requirements regarding the safety of persons and property for all piping uses and for all types of gases for purposes like fuel, lighting and medical in buildings

A-10 PART 10 LANDSCAPE DEVELOPMENT, SIGNS AND OUTDOOR DISPLAY STRUCTURES

A-10.1 Section 1 Landscape Planning, Design and Development

It covers requirements of landscape planning, design and development with the view to promoting quality of outdoor built and natural environments and the protection of land and its resources.

A-10.2 Section 2 Signs and Outdoor Display Structures

It covers the requirements with regard to public safety, structural safety and fire safety of all signs and outdoor display structures.

A-11 PART 11 APPROACH TO SUSTAINABILITY

It covers the parameters required to be considered for planning, design, construction, operation and maintenance of buildings and those relating to land development, from sustainability point of view. It is a supplement to all other Parts/Sections of the Code and shall be read along with them.

A-12 PART 12 ASSET AND FACILITY MANAGEMENT

It covers provisions relating to management of building assets and associated facilities and includes various aspects relating to maintenance of all types of facilities and fixed assets, such as buildings and building services. It does not cover assets other than physical assets.

NATIONAL BUILDING CODE OF INDIA

PART 1 DEFINITIONS

BUREAU OF INDIAN STANDARDS

National Building Code Sectional Committee, CED 46

FOREWORD

Each Part or Section of the National Building Code of India gives the definitions of the special terms used in it. These definitions may be found in the clause 'Terminology' normally placed immediately after the 'Scope' in each Part/Section. However, users may find this Part very convenient for reference as it gives the alphabetically arranged list of terms defined in all the Parts/Sections, along with the location of the definition. It may also be noted that in some cases like in Part 3 'Development Control Rules and General Building Requirements' and Part 7 'Construction Management, Practices and Safety' of the Code, these have been placed in other appropriate clauses rather than after 'Scope' considering the suitability and convenience afforded therefrom.

In this revision, this Part has been updated to cover the various terms actually covered in different Parts/Sections in this revision of the Code.

NATIONAL BUILDING CODE OF INDIA

PART 1 DEFINITIONS

1 SCOPE

This Part lists the terms which are appearing in all the Parts/Sections of the National Building Code of India, along with their definitions. The terms have been arranged in their alphabetical order. The Part(s)/ Section(s) in which these terms are appearing, have been indicated against the terms.

However, some common definitions are reproduced in this Part also, the definitions being placed immediately below the term concerned.

A

A95 — Part 8/Section 5A

Abandoned Sign — Part 10/Section 2

Ability — Part 3

Acceleration — Part 8/Section 5A, Part 8/Section 5B

**Access* — Part 3, Part 12

Access Aisle — Part 3

Access Panel — Part 9/Section 1

Access Point — Part 8/Section 6

Accessible Site, Building, Facility or Portions — Part 3

Accessible Route — Part 3

Accessible Toilet — Part 3

Accessory — Part 8/Section 2

Accessory Use — Part 2, Part 3

Any use of the premises subordinate to the principal use and customarily incidental to the principal use.

Accidental Loads — Part 6/Section 6

Accompanying Load — Part 6/Section 6

Action — Part 6/Section 6

Action Effect or Load Effect — Part 6/Section 6

Actual Length — Part 6/Section 6

Adaptive Thermal Comfort — Part 11

Advertising Sign — Part 10/Section 2

**Ageing* — Part 3, Part 12

Air Admittance Valve — Part 9/Section 2

Air Break — Part 9/Section 2

Air Change per Hour — Part 8/Section 1

Air Circuit Breaker (ACB) — Part 8/Section 2

Air Conditioning — Part 8/Section 3

Air Gap, Drainage — Part 9/Section 2

Air Gap, Water Distribution — Part 9/Section 1

Air System Balancing — Part 8/Section 3

Air Valve — Part 9/Section 1

Allowable Load — Part 6/Section 2

Alteration — Part 2, Part 3

A change from one type of occupancy to another, or a structural change, such as an addition to the area or height, or the removal of part of a building, or any change to the structure, such as the construction of, cutting into or removal of any wall, partition, column, beam, joist, floor or other support, or a change to or closing of any required means of ingress or egress or a change to the fixtures or equipment.

Alternating Current Variable Voltage (ACVV) Control — Part 8/Section 5A

Alternating Current Variable Voltage Variable Frequency (ACVVVF) Control — Part 8/Section 5A

Altitude — Part 8/Section 1

Ambient Noise — Part 8/Section 4

Anaerobic Digestion — Part 9/Section 3

Anchor Pile — Part 6/Section 2

Anchorage Device — Part 6/Section 5B

Angle of Attack — Part 6/Section 1

Angle of Inclination — Part 8/Section 5B

Animated Sign — Part 10/Section 2

Annealed Fire Resistant Glass — Part 6/Section 8

Annealed Glass (see Glass) — Part 6/Section 8

Antenna — Part 8/Section 6

Anti-siphon — Part 9/Section 1

Apparatus — Part 8/Section 2

Appliance — Part 8/Section 2

Appliance Valve — Part 9/Section 4

Approved — Part 2, Part 3, Part 10/Section 2

Approved by the Authority having jurisdiction.

Approved Agency — Part 9/Section 4

Appurtenance — Part 9/Section 1

Area of Rescue Assistance — Part 3

Area of Special Control — Part 10/Section 2

As-built Information — Part 12

As-cut Finished Sizes — Part 6/Section 8

Aspect Ratio — Part 6/Section 8

Assembly Buildings — Part 6/Section 1

---

* Definitions are different.

Asset — Part 12
Asset Life — Part 12
Asset Register — Part 12
Asset Type — Part 12
Asset/Facility Management — Part 12
Assisted Evacuation — Part 3, Part 4
Assistive Product/Device — Part 3
Atmospheric Pressure — Part 8/Section 3
Atrium — Part 4
Attenuation — Part 8/Section 6
Audible Frequency Range — Part 8/Section 4
Authorities Concerned — Part 4

An organization, office, or individual responsible for enforcing the requirements of a code or standard, or for approving or accepting equipment, materials, an installation, or a procedure.

Authority Having Jurisdiction — Part 0, Part 2, Part 3, Part 6/Section 7A, Part 6/Section 7B, Part 7, Part 9/Section 1, Part 9/Section 4, Part 10/Section 2, Part 11

The authority which has been created by a statute and which, for the purpose of administering the Code/Part, may authorize a committee or an official or an agency to act on its behalf; hereinafter called the 'Authority'.

Authorization — Part 9/Section 3
Automatic Door — Part 3
Automatic Fire Detection and Alarm System — Part 4
Automatic Operation — Part 8/Section 5A
Automatic Rescue Device — Part 8/Section 5A
Automatic Sprinkler System — Part 4
Automatic Water Spray Systems — Part 4
Auxiliary Brake — Part 8/Section 5B
Available Head — Part 9/Section 1
Avenue — Part 10/Section 1
A-Weighted Sound Pressure — Part 8/Section 4
A-Weighted Sound Pressure Level — Part 8/Section 4
Axial Flow Fan — Part 8/Section 1
Axis of Measurement — Part 8/Section 5A
Azimuth — Part 8/Section 1

B

Backbone — Part 8/Section 6
Backbone Cabling Media Distribution and Building Pathway — Part 8/Section 6
Back Fill — Part 6/Section 2
Back Pressure Backflow — Part 9/Section 1
Back Siphonage — Part 9/Section 1
Back to Back Cluster — Part 3
Back Up — Part 9/Section 2
Back-up Protection — Part 8/Section 2
Back Water Valve — Part 9/Section 2
Backflow — Part 9/Section 1
Backflow Prevention Device — Part 9/Section 1
Background noise — Part 8/Section 4
Background Noise Correction — Part 8/Section 5B
Balcony — Part 3
Balustrade — Part 6/Section 8, Part 8/Section 5B
Balustrade Decking — Part 8/Section 5B
Bamboo — Part 6/Section 3B
Bamboo Clump — Part 6/Section 3B
Bamboo Culm — Part 6/Section 3B
Bamboo Mat Board — Part 6/Section 3B
Bamboo Mat Corrugated Sheet — Part 6/Section 3B
Bamboo Mat Veneer Composite — Part 6/Section 3B
Band — Part 6/Section 4
Banner — Part 10/Section 2
Banner Sign– Part 10/Section 2
Barrel — Part 9/Section 1
Barrier — Part 8/Section 2
Base — Part 9/Section 1
Basement or Cellar — Part 3
Basic Protection — Part 8/Section 2
Basic Module — Part 6/Section 7A, Part 6/Section 7B
Bath Room Group — Part 9/Section 1, Part 9/Section 2
Bather Load — Part 9/Section 1
Batter Pile (Raker Pile) — Part 6/Section 2
Battery of Fixtures — Part 9/Section 2
Beads or Glazing Beads — Part 6/Section 8
Beam — Part 6/Section 3B, Part 6/Section 6
Beam, Built-Up-Laminated — Part 6/Section 3A
Beam, Glued-Laminated — Part 6/Section 3A
Bearing Capacity, Safe — Part 6/Section 2
Bearing Capacity, Ultimate — Part 6/Section 2
Bearing Pressure, Allowable (Gross or Net) — Part 6/Section 2
Bearing Type Connection — Part 6/Section 6
Bed Block — Part 6/Section 4
Bed Pan Washer — Part 9/Section 2
Bedding — Part 9/Section 1
Benching — Part 9/Section 2
Benchmarking — Part 12
Biodegradable Waste — Part 12
Biodiversity — Part 11
Bite — Part 6/Section 8
Biodegradable Substance — Part 9/Section 3

Biomethanation — Part 9/Section 3
Block (Setting Block) — Part 6/Section 8
Bond — Part 6/Section 4
Bonded Member — Part 6/Section 5B
Bonded Post-tensioning — Part 6/Section 5B
Bonding Conductor — Part 8/Section 2
Bonding Ring Conductor (BRC) — Part 8/Section 2
Bored Cast In-situ Pile — Part 6/Section 2
Bored Compaction Pile — Part 6/Section 2
Bored Pile — Part 6/Section 2
Bottom Car Clearance — Part 8/Section 5A
Bottom Car Run-by — Part 8/Section 5A
Bottom Counterweight Run-by — Part 8/Section 5A
Box System — *Part* 6/Section 4
Braced Member — Part 6/Section 6
Brake Load — Part 8/Section 5B
Branch — Part 9/Section 2
Branch Soil Pipe (BSP) — Part 9/Section 2
Branch Soil Waste Pipe (BSWP) — Part 9/Section 2
Branch Vent Pipe (BVP) — Part 9/Section 2
Branch Waste Pipe (BWP) — Part 9/Section 2
Breadth — *Part* 6/Section 1
Break-In — Part 8/Section 4
Break-Out — Part 8/Section 4
Breaking Strength — Part 6/Section 3B
Bresummer — Part 6/Section 3A
Briefing — Part 12
Brightness Ratio or Contrast — Part 8/Section 1
Brittle Cladding — Part 6/Section 6
Broad Band Noise — Part 8/Section 4
Buckling Load — Part 6/Section 6
*Buckling Strength or Resist*ance — Part 6/Section 6
**Buffer* — Part 8/Section 5A, Part 10/Section 1
Buffer Zone — Part 12
Building — Part 0, Part 2, Part 3, Part 4

Any structure for whatsoever purpose and of whatsoever materials constructed and every part thereof whether used as human habitation or not and includes foundation, plinth, walls, floors, roofs, chimneys, plumbing and building services, fixed platforms, verandah, balcony, cornice or projection, part of a building or anything affixed thereto or any wall enclosing or intended to enclose any land or space and signs and outdoor display structures. Tents/ *Shamianahs*, tarpaulin shelters, etc, erected for temporary and ceremonial occasions with the permission of the Authority shall not be considered as building.

* Definitions are different.

Building, Height of — Part 2, Part 3, Part 4

The vertical distance measured, in the case of flat roofs from the average level of the ground around and contiguous to the building or as decided by the Authority to the terrace of last livable floor of the building adjacent to the external walls; and in the case of pitched roofs, up to the point where the external surface of the outer wall intersects the finished surface of the sloping roof, and in the case of gables facing the road, the midpoint between the eaves level and the ridge. Architectural features serving no other function except that of decoration shall be excluded for the purpose of measuring heights.

Building Drain-Combined — Part 9/Section 2
Building Drain-Sanitary — Part 9/Section 2
Building Drain-Storm — Part 9/Section 2
Building Sewer — Part 9/Section 2
Building Sub-Drain — Part 9/Section 2
Building Trap — Part 9/Section 2
Building Energy Simulation (BES) — Part 8/Section 3
Building Environment — Part 11
Building Fabric — Part 12
Building Information Model (BIM) — Part 12
Building Integrated Renewable Energy — Part 8/ Section 3
Building Line — Part 2, Part 3, Part 10/Section 2

The line up to which the plinth of a building adjoining a street or an extension of a street or on a future street may lawfully extend. It includes the lines prescribed, if any, in any scheme. The building line may change from time to time as decided by the Authority.

Building Maintenance — Part 12
Building Management System (BMS) — Part 8/ Section 3, Part 8/Section 6, Part 12
Building Performance — Part 11
Buildings Related Illnesses (BRI) — Part 8/Section 3
Built-up Section — Part 6/Section 6
Built Environment — Part 11
Bunched — Part 8/Section 2
Bundle-Column — Part 6/Section 3B
Buried Direct — Part 8/Section 2
Bus Bar — Part 8/Section 6
Busbar Trunking System — Part 8/Section 2
Business Buildings — Part 6/Section 1
Business Continuity Management (BCM) — Part 12
Buttress — Part 6/Section 4
Bypass Equipotential Bonding Conductor — Part 8/ Section 2

C

Cabin — Part 3
Cable — Part 6/Section 5B, Part 8/Section 2
Cable, Circuit Integrity — Part 8/Section 2
Cable, Flame Retardant (FR) — Part 8/Section 2
Cable, Flame Retardant Low Smoke Halogen Free (FR-LSH) — Part 8/Section 2
Cable, Flexible — Part 8/Section 2
Cable, Metal-Sheathed — Part 8/Section 2
Cable, PVC Sheathed-Insulated — Part 8/Section 2
Cable, Weatherproof — Part 8/Section 2
Cable, XLPE — Part 8/Section 2
Cable Armoured — Part 8/Section 2
Cable Bracket — Part 8/Section 2
Cable Channel — Part 8/Section 2
Cable Cleat — Part 8/Section 2
Cable Coupler — Part 8/Section 2
Cable Ducting — Part 8/Section 2
Cable Ladder — Part 8/Section 2
Cable Raceways — Part 8/Section 2
Cable Tray — Part 8/Section 2
Cable Trunking — Part 8/Section 2
Cable Tunnel — Part 8/Section 2
Call Indicator — Part 8/Section 5A
Camber — Part 6/Section 6
Candela (cd) — Part 8/Section 1
Canopy — Part 3
Canopy/Tree Canopy — Part 10/Section 1
Canopy Sign — Part 10/Section 2
Car Bodywork — Part 8/Section 5A
Car Door Electric Contact — Part 8/Section 5A
Car Frame — Part 8/Section 5A
Car Platform — Part 8/Section 5A
Car Switch Operation — Part 8/Section 5A
Carbon Emissions — Part 12
Carbon Footprint — Part 12
Cartridge Fuse Link — Part 8/Section 2
Carpet Area — Part 3
Ceiling Rose — Part 8/Section 2
Cell — Part 6/Section 3B
Cellular Concrete — Part 6/Section 7A, Part 6/Section 7B
Cellulose — Part 6/Section 3B
Central Field — Part 8/Section 1
Centre Internode — Part 6/Section 3B
Centre of Rigidity — Part 6/Section 4
Centrifugal Fan — Part 8/Section 1
Cesspool — Part 9/Section 2
Chair — Part 9/Section 1
Chair Rail — Part 6/Section 8
Channel — Part 9/Section 1
Characteristic Load — Part 6/Section 3B, Part 6/Section 5B, Part 6/Section 6
Characteristic Strength — Part 6/Section 3B, Part 6/Section 5B
Characteristic Yield/Ultimate Stress — Part 6/Section 6
Check — Part 6/Section 3A
Chhajja — Part 3
Chimney — Part 3
Chowk or Courtyard — Part 3
Chowk, Inner — Part 3
Chowk, Outer — Part 3
Circuit — Part 8/Section 2
Circuit, Final Sub — Part 8/Section 2
Circuit Breaker — Part 8/Section 2
Circuit Breaker, Linked — Part 8/Section 2
Circuit Integrity Cable Support and Fixing Materials — Part 8/Section 2
Circulation Path — Part 3
Circulation Space — Part 3
Clay — Part 6/Section 2
Clay, Firm — Part 6/Section 2
Clay, Soft — Part 6/Section 2
Clay, Stiff — Part 6/Section 2
Cleaning — Part 12
Cleaning Eye — Part 9/Section 2
Cleaning Services — Part 12
Clear — Part 3
Clear Design Sky — Part 8/Section 1
Clear Glass — Part 6/Section 8
Clear Waste Water– Part 9/Section 2
Clearance– Part 8/Section 5A
Cleat — Part 8/Section 2
Cleavability — Part 6/Section 3B
Climber (Creeper/Vine) — Part 10/Section 1
Closed Clusters — Part 3
Closed Sign — Part 10/Section 2
Closely-Spaced Modules — Part 6/Section 1
Cluster — Part 3
Cluster Court Town House — Part 3
Cluster Plot — Part 3
Coaxial Cable — Part 8/Section 6
Coincidence Factor — Part 8/Section 2
Collapse — Part 6/Section 3B
Collection — Part 9/Section 3
Collection Chamber — Part 9/Section 2

Colour Contrast — Part 3

Colour Rendering Index (CRI) — Part 8/Section 1

**Column* — Part 6/Section 3B, Part 6/Section 6

Column or Strut — Part 6/Section 5B

Column — Part 6/Section 4

Columnar — Part 10/Section 1

Coefficient of Linear Expansion — Part 6/Section 8

Coefficient of Performance, Compressor, Heat Pump — Part 8/Section 3

Coefficient of Performance, Compressor, Refrigerating — Part 8/Section 3

Coefficient of Performance (Heat Pump) — Part 8/Section 3

Coefficient of Performance (Refrigerating) — Part 8/Section 3

Comb — Part 8/Section 5B

Comb Lighting — Part 8/Section 5B

Comb Plate — Part 8/Section 5B

Comb Plate Switch — Part 8/Section 5B

Comb Teeth — Part 8/Section 5B

Combination Sign– Part 10/Section 2

Combustible Material — Part 4, Part 6/Section 8, Part 10/Section 2

A material that, in the form in which it is used and under the conditions anticipated, will ignite and burn; a material that does not meet the definition of noncombustible or limited combustible.

Common Path of Travel — Part 4

Common Rafter — Part 6/Section 3B

Communication Pipe — Part 9/Section 1

Compact Section — Part 6/Section 6

Compact Substation or Prefabricated Substation — Part 8/Section 2

Competent Authority — Part 9/Section 4

Competent Maintenance Person — Part 8/Section 5A

Competent Person — Part 12

Component — Part 6/Section 7A, Part 6/Section 7B

Composite Members — Part 6/Section 7A, Part 6/Section 7B

Composite Station — Part 4

Composting — Part 9/Section 3

Compression Wood — Part 6/Section 3A

Computer Aided Facilities Management (CAFM) — Part 12

Computer Aided Maintenance Management System (CMMS) — Part 12

Concrete Grades — Part 6/Section 4

* Definitions are different.

Concourse — Part 4

Condition Monitoring — Part 12

Conductor of a Cable or Core — Part 8/Section 2

Conductor, Aerial — Part 8/Section 2

Conductor, Bare — Part 8/Section 2

Conductor, Earthed — Part 8/Section 2

Conductor, Insulated — Part 8/Section 2

Conduit — Part 8/Section 2

Confined Space — Part 12

Connection — Part 9/Section 2

Connector — Part 8/Section 2

Connector Box or Joint Box — Part 8/Section 2

Connector for Portable Appliances — Part 8/Section 2

Consolidation Point (CP) — Part 8/Section 6

Constant Stress Range — Part 6/Section 6

Construction and Demolition Waste — Part 9/Section 3

Construction Equipment — Part 7

**Consumer* — Part 9/Section 1, Part 9/Section 2

Consumer's Pipe– Part 9/Section 1

Consumer's Terminals — Part 8/Section 2

Contaminants — Part 8/Section 1

Continuous Operating Voltage (U_c) — Part 8/Section 2

Contour — Part 10/Section 1

Contour Interval — Part 10/Section 1

Control — Part 8/Section 5A

Conversion — Part 2

Cooking Alcove — Part 3

Cooling Load — Part 8/Section 3

Cooling Tower — Part 8/Section 3

Cord, Flexible — Part 8/Section 2

Core of a Cable — Part 8/Section 2

Corrective Maintenance — Part 12

Correlated Colour Temperature (CCT) — Part 8/Section 1

Corridor — Part 6/Section 8

Corrosion — Part 6/Section 6

Counterweight — Part 8/Section 5A

Cover — Part 9/Section 1

Covered Area — Part 3, Part 4

Ground area covered by the building immediately above the plinth level. The area covered by the following in the open spaces is excluded from covered area (*see* Table 2 of Part 4 'Fire and Life Safety' of the Code):

a) Garden, rockery, well and well structures, plant nursery, waterpool, swimming pool (if uncovered), platform round a tree, tank,

* Definitions are different.

fountain, bench, *Chabutara* with open top and unenclosed on sides by walls and the like;

b) Drainage culvert, conduit, catch–pit, gully pit, chamber, gutter and the like;

c) Compound wall, gate, unstoreyed porch and portico, slide, swing, uncovered staircases, ramp areas covered by *Chhajja* and the like; and

d) Watchman's booth, pumphouse, garbage shaft, electric cabin or sub-stations, and such other utility structures meant for the services of the building under consideration.

NOTE — For the purpose of this part, covered area equals the plot area minus the area due for open spaces in the plot.

Coupled Glazing (Secondary Glazing) — Part 6/Section 8

Crane Load — Part 6/Section 6

Creep — Part 6/Section 5B

Creep Coefficient — Part 6/Section 5B

Crime Prevention through Environmental Design (CPTED) — Part 12

Critical Activities — Part 12

Critical Asset — Part 12

Critical Damping — Part 6/Section 1

Crookedness — Part 6/Section 3B

Cross Wall — Part 6/Section 3B

Cross-Connect — Part 8/Section 6

Cross-Connection — Part 9/Section 1

Cross-Sectional Area of Masonry Unit — Part 6/Section 4

Cross-Talk — Part 8/Section 4

Crown of Trap — Part 9/Section 2

Crumple Section — Part 6/Section 4

Crush Train Load — Part 4

'Cul-de-Sac' Cluster — Part 3

Cumulative Figure — Part 6/Section 6

Current Carrying Capacity of a Conductor — Part 8/Section 2

Current Using Equipment — Part 8/Section 2

Curtain Wall — Part 6/Section 4, Part 6/Section 8

Curvature — Part 6/Section 3B

Customer's/Consumer's Connection — Part 9/Section 4

Cut-Out — Part 8/Section 2

Cut-Off Level — Part 6/Section 2

Cut-Off Limit — Part 6/Section 6

D

Damp Situation — Part 8/Section 2

Damping — Part 6/Section 1

Danger — Part 8/Section 2

Daylight Area — Part 8/Section 1

Daylight Factor — Part 8/Section 1

Daylight Penetration — Part 8/Section 1

Deconstruction — Part 12

De-Structured Bamboo — Part 6/Section 3B

Dead — Part 8/Section 2

Dead Knot — Part 6/Section 3A

Dead Loads — Part 6/Section 6

Decay or Rot — Part 6/Section 3A

Decayed Knot — Part 6/Section 3A

Decibel — Part 8/Section 4

Deciduous Tree — Part 10/Section 1

Dedicated Outdoor Air System (DOAS) — Part 8/Section 3

Deep Area — Part 9/Section 1

Deep Manhole — Part 9/Section 2

Deflection — Part 6/Section 6

Deflector Sheave– Part 8/Section 5A

Delamination — Part 6/Section 3B

Deliverable — Part 12

Demand Based Ventilation — Part 8/Section 3

Density — Part 3

Depth — Part 6/Section 1

Depth of Manhole — Part 9/Section 2

Design Acceleration — Part 8/Section 5A

Design Acceleration Spectrum — Part 6/Section 1

Design Current (of a Circuit) — Part 8/Section 2

Design Development — Part 12

Design Horizontal Seismic Coefficient — Part 6/Section 4

**Design Life* — Part 6/Section 6, Part 12

Design Load/Factored Load — Part 6/Section 6

Design Pressure Difference — Part 8/Section 3

Design Spectrum — Part 6/Section 6

Design Horizontal Acceleration Coefficient — Part 6/Section 1

Design Horizontal Force — Part 6/Section 1

Detached Building — Part 3

Detail Category — Part 6/Section 6

Developed Height — Part 6/Section 1

Developed Length — Part 9/Section 2

Development — Part 2, Part 3

'Development' with grammatical variations means the carrying out of building, engineering, mining or other

* Definitions are different.

operations in, or over, or under land or water, or in the use of any building or land, and includes redevelopment and layout and subdivision of any land; and 'to develop' shall be construed accordingly.

Dew Point Temperature — Part 8/Section 3
Diameter — Part 9/Section 2

The nominal internal diameter of pipes and fittings.

Diameter of Knot — Part 6/Section 3A
Diaphragm — Part 6/Section 7A
Diaphragm, Structural — Part 6/Section 3A
Dilution Ventilation — Part 8/Section 1
Direct Contact — Part 8/Section 2
Direct to Home (DTH) — Part 8/Section 6
Direct Earthing System — Part 8/Section 2
Direct Solar Illuminance — Part 8/Section 1
Direct Tap — Part 9/Section 1
Direction Sign — Part 10/Section 2
Disability — Part 3
Disaster — Part 11
Discolouration — Part 6/Section 3A, Part 6/Section 3B
Disconnector — Part 8/Section 2
Discontinuity — Part 6/Section 6
Discrimination (Over-Current Discrimination) — Part 8/Section 2
Disposal — Part 9/Section 3
Distance Piece — Part 6/Section 8
Distance Area or Resistance Area (for an Earth Electrode only) — Part 8/Section 2
Distribution/Distributing Company — Part 9/Section 4
Diversity Factor — Part 8/Section 2
Diving Pool — Part 9/Section 1
Documented Information — Part 12
Domestic Hazardous Waste — Part 12
Door — Part 8/Section 5A
Door-to-Door Time — Part 8/Section 5A
Door and Shutter Assembly Door-Set — Part 6/Section 8
Door Closer — Part 8/Section 5A
Door Closing Time — Part 8/Section 5A
Door Opening Time — Part 8/Section 5A
Door Operator — Part 8/Section 5A
Door, Centre Opening Sliding — Part 8/Section 5A
Door, Mid-Bar Collapsible — Part 8/Section 5A
Door, Multi-Panel — Part 8/Section 5A
Door, Single Slide — Part 8/Section 5A
Door, Swing — Part 8/Section 5A
Door, Two Speed Siding — Part 8/Section 5A
Door, Vertical Bi-parting — Part 8/Section 5A
Door, Vertical Lifting — Part 8/Section 5A
Double Button (Continuous Pressure) Operation — Part 8/Section 5A
Double Glazed Fire Resistant Glass — Part 6/Section 8
Double Glazing — Part 6/Section 8
Down-Comer — Part 4
Down Take Tap — Part 9/Section 1
Drain — Part 2, Part 3, Part 9/Section 2

A conduit, channel or pipe for the carriage of storm water, sewage, waste water or other water-borne wastes in a building drainage system.

Drain Vent Pipe (DVP) — Part 9/Section 2
**Drainage* — Part 2, Part 3, Part 9/Section 2, Part 10/Section 1
Drainage Fixture Unit (DFU) — Part 9/Section 2
Drainage Work — Part 9/Section 2
Driven Cast In-situ Pile — Part 6/Section 2
Drop Connection — Part 9/Section 2
Drop Manhole — Part 9/Section 2
Dry Riser — Part 4
Dry Waste — Part 12
Dry Bulb Temperature — Part 8/Section 1, Part 8/Section 3
Duct — Part 8/Section 2
Ducting — Part 8/Section 2
Duct System — Part 8/Section 3
Ductility — Part 6/Section 1, Part 6/Section 6
Dumb Waiter — Part 8/Section 5A
Dump Sites — Part 12
**Durability* — Part 6/Section 6, Part 12
Duration of Load — Part 6/Section 3A
Duress Alarms — Part 12
Dwelling Unit/Tenement — Part 3
Dwellings — Part 6/Section 1

E

Earth — Part 8/Section 2
Earth Continuity Conductor — Part 8/Section 2
Earthed Concentric Wiring — Part 8/Section 2
Earth Electrode — Part 8/Section 2
Earth Electrode Network — Part 8/Section 2
Earth Electrode Resistance — Part 8/Section 2
Earth Fault — Part 8/Section 2
Earth Fault Current — Part 8/Section 2

---

* Definitions are different.

Earth Leakage Current — Part 8/Section 2
Earthing — Part 8/Section 2
Earthing Conductor — Part 8/Section 2
Earthing Lead — Part 8/Section 2
Earthing Resistance, Total — Part 8/Section 2
Earthquake Loads — Part 6/Section 6
Ecological Footprint — Part 11
Ecosystem — Part 11
Economizer, Air — Part 8/Section 3
Economizer, Water — Part 8/Section 3
**Edge Distance* — Part 6/Section 3A, Part 6/Section 6
Edge Deterioration — Part 6/Section 8
Edge Faults — Part 6/Section 8
Edge Polished — Part 6/Section 8
Edging — Part 6/Section 8
Educational Buildings — Part 6/Section 1
Effective Frontal Area — Part 6/Section 1
Effective Height — Part 6/Section 4
Effective Lateral Restraint — Part 6/Section 6
**Effective Length* — Part 6/Section 4, Part 6/Section 6
Effective Opening — Part 9/Section 1
Effective Perceived Noise Level in Decibel (EPN dB) — Part 8/Section 4
**Effective Temperature (ET)* — Part 8/Section 1, Part 8/Section 3
Effective Thickness — Part 6/Section 4
Efficiency of a Pile Group — Part 6/Section 2
Egress — Part 10/Section 1
Elastic Cladding — Part 6/Section 6
Elastic Critical Moment — Part 6/Section 6
Elastic Design — Part 6/Section 6
Elastic Limit — Part 6/Section 6
Electric Shock — Part 8/Section 2
Electric Sign — Part 10/Section 2
Electrical and Mechanical Interlock — Part 8/Section 5A
Electrical Equipment (abb: Equipment) — Part 8/Section 2
Electrically Independent Earth Electrode — Part 8/Section 2
Electrical Supply System for Life and Safety Services — Part 8/Section 2
Electro-Mechanical Lock — Part 8/Section 5A
Electronic Devices — Part 8/Section 5A
Element of Surface Area — Part 6/Section 1
Elevation — Part 10/Section 1
Embodied Energy — Part 11

* Definitions are different.

Emergency Brake — Part 8/Section 5B
Emergency Lighting — Part 4
Emergency Lighting System — Part 4
Emergency Stop Switch — Part 8/Section 5B
Emergency Switching — Part 8/Section 2
Emission Sound Pressure Level (L_{pA}) — Part 8/Section 5B
Emissivity (E) — Part 11
Emulative Detailing System — Part 6/Section 7A
Enclosed Station — Part 4
Enclosed Distribution Board — Part 8/Section 2
Enclosure — Part 8/Section 2
*End Dist*ance — Part 6/Section 3A, Part 6/Section 3B, Part 6/Section 6
End Splitting — Part 6/Section 3B
End-User — Part 12
Endemic Plant — Part 10/Section 1
Energy Efficiency Ratio (EER) — Part 8/Section 3
Energy Recovery Unit — Part 8/Section 3
Entraining Load — Part 4
Environmental Impact — Part 11
Environmental Indicator (K_{2A}) — Part 8/Section 5B
Epicenter — Part 6/Section 1
Equipotential Bonding — Part 8/Section 2
Equivalent Continuous A-Weighted Sound Pressure Level, $L_{Aeq.T}$ — Part 8/Section 4
Equivalent Sound Absorption Area of a Room, A — Part 8/Section 4
Equivalent Sound Pressure Level (L_{Aeq}) — Part 8/Section 5A, Part 8/Section 5B
Erection Loads — Part 6/Section 6
Erection Tolerance — Part 6/Section 6
Erosion — Part 10/Section 1
Escalator — Part 3, Part 8/Section 5B
Escape Lighting — Part 4
Estimated Service Life (ESL) — Part 12
Evacuation Lift — Part 4
Evaporative Cooling — Part 8/Section 3
Evergreen Tree — Part 10/Section 1
Exhaust of Air — Part 8/Section 1
Exit — Part 3, Part 4
Exit Access — Part 4
Exit Access Corridor — Part 4
Exit Discharge — Part 4
Exotic — Part 10/Section 1
Exposed Conductive Part — Part 8/Section 2

Exposed Edge — Part 6/Section 8
Exposed Metal — Part 8/Section 2
Exposed Surface Area to Mass Ratio — Part 6/Section 6
Exterior Panel — Part 8/Section 5B
Exterior Property — Part 12
Exterior Sign — Part 10/Section 2
External Envelope — Part 12
External Faces of Cluster — Part 3
External Influence — Part 8/Section 2
External Lightning Protection System — Part 8/Section 2
External Reflected Component (ERC) — Part 8/Section 1
Extraneous Conductive Part — Part 8/Section 2

F

Fabrication Tolerance — Part 6/Section 6
Facade — Part 6/Section 8
Facade Level — Part 8/Section 4
Faced Wall — Part 6/Section 4
Faceted Glazing — Part 6/Section 8
Factor of Safety — Part 6/Section 6
Factor of Safety (with Respect to Bearing Capacity) — Part 6/Section 2
Facilities Maintenance — Part 12
Facility — Part 12
Facility Asset Maintenance — Part 12
Fatigue — Part 6/Section 6
Fatigue Loading — Part 6/Section 6
Fatigue Strength — Part 6/Section 6
Fault — Part 8/Section 2
Fault Current — Part 8/Section 2
Fault Protection — Part 8/Section 2
Feed Cistern — Part 9/Section 1
Fence — Part 10/Section 1
Fenestration — Part 6/Section 8
Fetch Length — Part 6/Section 1
Fin — Part 6/Section 8
Final Circuit — Part 8/Section 2
Final Prestress — Part 6/Section 5B
Final Tension — Part 6/Section 5B
Finger Joint — Part 6/Section 3A
Finger Jointed Timber — Part 6/Section 3A
Fire Barrier (or Fire Resisting Barrier) — Part 4
Fire Compartment — Part 4
Fire Damper — Part 8/Section 3
Fire Door and Fire Door Assembly — Part 4
Fire Exit — Part 4
Fire Exit Hardware — Part 4
Fire Exposure Condition — Part 6/Section 6
Fireman's Lift — Part 4
Fire Load — Part 4
Fire Load Density — Part 4
Fire Protection System — Part 6/Section 6
**Fire Resistance* — Part 4; Part 6/Section 6
Fire Resistance Level — Part 6/Section 6
Fire Resistance Rating — Part 4
Fire Resistant Wall — Part 4
Fire Separation — Part 3, Part 4, Part 6/Section 8

The distance, in metre, measured from the external wall of the building concerned to the external wall of any other building on the site, or from other site, or from the opposite side of a street or other public space for the purpose of preventing the spread of fire.

Fire Stop — Part 4
Fire Suppression Systems — Part 4
Fire Survival Distribution Board — Part 8/Section 2
Fire Wall or Fire Separating Wall — Part 4
Firefighting Shaft (Fire Tower) — Part 4
Fitting, Lighting — Part 8/Section 2
Fittings — Part 9/Section 1, Part 9/Section 2

The appurtenances such as coupling, flange, branch, bend, tees, elbows, unions, waste (with or without plug), P or S trap (with or without vent), stop ferrule, bib tap, pillar tap, bath faucet, water meter, garden hydrant, valves and any other article used in connection with water supply, drainage and sanitation.

Fixed Equipment — Part 8/Section 2
Fixture Unit — Part 9/Section 1, Part 9/Section 2
Flameproof Enclosure– Part 8/Section 2
Flattened Bamboo — Part 6/Section 3B
Flexural Stiffness — Part 6/Section 6
Float Glass — Part 6/Section 8
Float Operated Valve — Part 9/Section 1
Floor — Part 3

The lower surface in a storey on which one normally walks in a building. The general term 'floor' unless specifically mentioned otherwise shall not refer to a 'mezzanine floor'.

Floor Area (Gross) — Part 4
Floor Area Ratio (FAR) — Part 3, Part 4

The quotient obtained by dividing the total covered area (plinth area) on all floors by the area of the plot.

---

* Definitions are differen

Floor Hole — Part 7
Floor Opening — Part 7
Floor Response Spectrum — Part 6/Section 1
Floor Selector — Part 8/Section 5A
Floor Stopping Switch — Part 8/Section 5A
Flush Over Panel — Part 6/Section 8
Flushing Cistern — Part 9/Section 1
Flushometer Tank — Part 9/Section 1
Foam Protection System — Part 4
Foliage — Part 10/Section 1
Footing — Part 6/Section 2
Force Coefficient — Part 6/Section 1
Formation — Part 9/Section 1, Part 9/Section 2
Foundation — Part 6/Section 2
Foundation, Raft — Part 6/Section 2
Frame — Part 6/Section 8
Frameless Glazing — Part 6/Section 8
Free-Field Level — Part 8/Section 4
Freestanding Sign– Part 10/Section 2
French Drain or Rubble Drain — Part 9/Section 2
**Frequency* — Part 8/Section 4, Part 8/Section 6
Fresh Air or Outside Air — Part 8/Section 1
Friction Type Connection — Part 6/Section 6
Front Putty — Part 6/Section 8
Frost Line — Part 9/Section 1, Part 9/Section 2
Full Culm — Part 6/Section 3B
Fully Framed Glazing — Part 6/Section 8
Functional Earthing — Part 8/Section 2
Fundamental or Ultimate Stress — Part 6/Section 3A, Part 6/Section 3B
Fuse — Part 8/Section 2
Fuse Carrier — Part 8/Section 2
Fuse Element — Part 8/Section 2
Fuse Link — Part 8/Section 2

G

Gallery — Part 3
Gap — Part 6/Section 8
Garage, Private — Part 3
Garage, Public — Part 3
Gas Fitter — Part 9/Section 4
Gauge — Part 6/Section 6
Geared Machine — Part 8/Section 5A
Gearless Machine — Part 8/Section 5A
General Ventilation — Part 8/Section 1
General Washing Place — Part 9/Section 1
Generator of Wastes — Part 9/Section 3

* Definitions are different.

Geogrid — Part 10/Section 1
Geo-textile — Part 10/Section 1
Geothermal Heat Pump — Part 8/Section 3
Geyser — Part 9/Section 1
Girth of Tree — Part 10/Section 1
Glare — Part 8/Section 1
Glass — Part 6/Section 8
Glazing-Bite — Part 6/Section 8
Global Warming Potential (GWP) — Part 8/Section 3
Globe Temperature — Part 8/Section 1
Glue — Part 6/Section 3A
Glued Laminated (Glulam) — Part 6/Section 3A
Glued Laminated, horizontally — Part 6/Section 3A
Glued Laminated, vertically — Part 6/Section 3A
Goods Lift — Part 8/Section 5A
Grab Bars — Part 3
Grade — Part 10/Section 1
Gradient Height — Part 6/Section 1
Gradient — Part 10/Section 1
Grading — Part 10/Section 1
Grass Paver — Part 10/Section 1
Grasses — Part 10/Section 1
Gravel — Part 6/Section 2
Gravity Load — Part 6/Section 6
Grease Interceptor (or Grease Trap) — Part 9/Section 2
Green Roof — Part 10/Section 1
Green Roof System — Part 11
Green Walls — Part 10/Section 1
Ground Improvement — Part 6/Section 2
Ground Roughness — Part 6/Section 1
Ground Sign — Part 10/Section 2
Ground-Borne Noise — Part 8/Section 4
Groundcover — Part 10/Section 1
Group Automatic Operation — Part 8/Section 5A
Group Housing — Part 3
Group Open Space– Part 3
Grout — Part 6/Section 4
Grouted Cavity Reinforced Masonry — Part 6/Section 4
Grouted Hollow-Unit Masonry — Part 6/Section 4
Grouted Masonry — Part 6/Section 4
Grouted Multi-Wythe Masonry — Part 6/Section 4
Guard Railing — Part 7
Guard Rail — Part 6/Section 8
Guide Rails — Part 8/Section 5A
Guide Rails Fixing– Part 8/Section 5A
Guide Shoe — Part 8/Section 5A
Gully Chamber– Part 9/Section 2

Gully Trap– Part 9/Section 2
Gusset Plate — Part 6/Section 6
Gust — Part 6/Section 1

H

Habitable Room — Part 3
Hairline Scratch — Part 6/Section 8
Halo — Part 6/Section 8
Hand-Held Equipment — Part 8/Section 2
Handling Capacity (HC) — Part 8/Section 5A
* *Handrail* — Part 3, Part 8/Section 5B
Hard Landscape — Part 10/Section 1
Hardy Plant — Part 10/Section 1
Harmonics (Current and Voltage) — Part 8/Section 2
Haunching — Part 9/Section 1
Hazardous Live-Part — Part 8/Section 2
Hazardous Waste — Part 12
Headway — Part 4
Heat Island Effect — Part 10/Section 1, Part 11
Heat Pump — Part 8/Section 3
Heat Recovery — Part 8/Section 3
Heat Soaking — Part 6/Section 8
Heat Strengthened Glass — Part 6/Section 8
Heating Load — Part 8/Section 3
Hedge — Part 10/Section 1
Heel Rest Bend or Duck-Foot Bend — Part 9/Section 1
Hemi Cellulose — Part 6/Section 3B
Herb — Part 10/Section 1
Hermetic Seal — Part 6/Section 8
High Activity Area — Part 6/Section 8
High Altitudes — Part 9/Section 1, Part 9/Section 2
High Rise Building — Part 4
High Risk Area — Part 6/Section 8
High Shear — Part 6/Section 6
Highway Authority — Part 9/Section 1, Part 9/Section 2
Hoisting Beam — Part 8/Section 5A
Hollow Unit — Part 6/Section 4
Horizontal Cabling — Part 8/Section 6
Horizontal Cabling Media Distribution and Building Pathway — Part 8/Section 6
Horizontal Cross-Connect (HC) — Part 8/Section 6
Horizontal Exit — Part 4
Horizontal Pipe — Part 9/Section 1, Part 9/Section 2
Horizontal Sun Angle (HSA) — Part 11
Hospital Lift — Part 8/Section 5A
Hot Water Tank — Part 9/Section 1
House Keeping — Part 12

* Definitions are different.

Hue — Part 3
Humidification — Part 8/Section 1
Humidity, Absolute — Part 8/Section 1
Humidity, Relative — Part 8/Section 1
Hybrid Building — Part 8/Section 3
Hydrant System — Part 4
Hydro-pneumatic Systems — Part 9/Section 1
Hydronic Systems — Part 8/Section 3
Hydronic System Balancing — Part 8/Section 3

I

Identification Sign — Part 10/Section 2
Illuminance — Part 8/Section 1
Illuminated Sign — Part 10/Section 2
Impact Sound Pressure Level, L_i — Part 8/Section 4
Impairment — Part 3
Importance Factor — Part 6/Section 1
**Imposed Load (Live Load)* — Part 6/Section 1, Part 6/Section 6
Impulse Current — Part 8/Section 2
Impulse Withstood Voltage — Part 8/Section 2
Increments — Part 6/Section 7A, Part 6/Section 7B
Independent Cluster– Part 3
Indirect Contact — Part 8/Section 2
Indirect-Direct Cooling — Part 8/Section 3
Indirect Waste Pipe — Part 9/Section 2
Indoor Air Quality (IAQ) — Part 8/Section 3, Part 11
Indoor Ambient Noise — Part 8/Section 4
Indoor Environment Quality (IEQ) — Part 11
Industrial Buildings — Part 6/Section 1
Industrial Plugs and Sockets — Part 8/Section 2
Infill Balustrades — Part 6/Section 8
Infiltration/Exfiltration — Part 8/Section 3
Inflammable Material — Part 8/Section 2
Information Management — Part 12
Informational Sign — Part 10/Section 2
Ingress — Part 10/Section 1
Initial Load Test — Part 6/Section 5B
Initial Prestress — Part 6/Section 5B
Initial Tension — Part 6/Section 5B
Injection — Part 6/Section 2
Inlet — Part 9/Section 1
Inlet Fittings — Part 9/Section 2
Inlet Hopper — Part 9/Section 2
Inner Diameter — Part 6/Section 3B
Insanitary — Part 9/Section 2
Insertion Loss — Part 8/Section 4

* Definitions are different.

Inside Location — Part 6/Section 3A, Part 6/Section 3B
Inside Plant (ISP) — Part 8/Section 6
Inspection Chamber — Part 9/Section 2
Inspection Door — Part 8/Section 5B
Instability — Part 6/Section 6
**Installation* — Part 8/Section 5A, Part 9/Section 4
Installation (Electrical) — Part 8/Section 2
Installer — Part 8/Section 5A
Institutional Buildings — Part 6/Section 1
Insulated — Part 8/Section 2
Insulating Glass Unit (IGU) — Part 6/Section 8
Insulation — Part 8/Section 2
Insulation, Basic — Part 8/Section 2
Insulation, Double — Part 8/Section 2
Insulation, Reinforced — Part 8/Section 2
Insulation, Supplementary — Part 8/Section 2
Intensity of Earthquake — Part 6/Section 1
Interceptor — Part 9/Section 2
Interceptor Manhole or Interceptor Chamber — Part 9/Section 2
Interior Panel — Part 8/Section 5B
Interlayer — Part 6/Section 8
Interlocking Cluster — Part 3
Intermediate Cross-Connect — Part 8/Section 6
Internal Faces of Cluster– Part 3
Internal Lightning Protection System — Part 8/Section 2
Internal Partition — Part 6/Section 8
Internal Reflected Component (IRC) — Part 8/Section 1
International Symbol of Accessibility — Part 3, Part 10/Section 2
Interval — Part 8/Section 5A
Intrusion Detection Systems — Part 12
Invasive Plant — *Part* 10/Section 1
Invert — Part 9/Section 2, Part 10/Section 1
Internet of Things — Part 8/Section 6
Irrigation — Part 10/Section 1
Isolation — Part 8/Section 2
Isolator — Part 8/Section 2
Isoptera — Part 6/Section 3A

J

Jerk — Part 8/Section 5A
Joint — Part 6/Section 3B, Part 6/Section 4
Joist — Part 6/Section 3B
Jointed Detailing System — Part 6/Section 7A
Joint Reinforcement — Part 6/Section 4
Junction Box — Part 8/Section 2
Junction Pipe — Part 9/Section 1, Part 9/Section 2

K

* *Kerb* — Part 3, Part 10/Section 1
Kerb Ramp — Part 3
Knot — Part 6/Section 3A
Knot Hole– Part 6/Section 3A
Knurled Surface — Part 3

L

Lagging — Part 9/Section 1, Part 9/Section 2
Lamella Roof — Part 6/Section 3A
Laminated Safety Glass — Part 6/Section 8
Laminated Veneer Lumber — Part 6/Section 3A
Laminations — Part 6/Section 3A
Landfilling — Part 9/Section 3
Landing — Part 3
Landing Call Push — Part 8/Section 5A
Landing Door — Part 8/Section 5A
Landing Zone — Part 8/Section 5A
Large Lobby — Part 8
Latent Heat — Part 8/Section 3
Latent Heat Load — Part 8/Section 3
Lateral Restraint for a Beam — Part 6/Section 6
Lateral Support — Part 6/Section 4
Latewood — Part 6/Section 3A
Leachate — Part 9/Section 3
Leading Imposed Load — Part 6/Section 6
Leaf — Part 6/Section 4
Leakage Current — Part 8/Section 2
Ledge or Tand — Part 3
Length of Internode — Part 6/Section 3B
Levelling Device, Lift Car — Part 8/Section 5A
Levelling Device, One Way Automatic — Part 8/Section 5A
Levelling Device, Two-Way Automatic Maintaining — Part 8/Section 5A
Levelling Devices — Part 8/Section 5A
Levelling Zone — Part 8/Section 5A
LEMP Protection Measures (SPM) — Part 8/Section 2
Licensed (or Registered) Plumber — Part 9/Section 1, Part 9/Section 2
Life Cycle — Part 12
Life Cycle Assessment (LCA) — Part 11
Lift — Part 3, Part 8/Section 5A

* Definitions are different.

* Definitions are different.

An appliance designed to transport persons or materials between two or more levels in a vertical or substantially vertical direction by means of a guided car or platform. The word 'elevator' is also synonymously used for 'lift'.

Lift Car — Part 8/Section 5A
Lift Landing — Part 8/Section 5A
Lift Lobby — Part 4
Lift Machine — Part 8/Section 5A
Lift Pit — Part 8/Section 5A
Lift Ride Quality — Part 8/Section 5A
Lift Well — Part 8/Section 5A
Lift Well Enclosure — Part 8/Section 5A
Light Output Ratio (LOR) or Efficiency — Part 8/Section 1
Light Pipe — Part 8/Section 1
Light Reflectance Value (LRV) — Part 3
Light Shelf — Part 8/Section 1/, Part 11
Light Transmission — Part 6/Section 8
Light Transmittance — Part 6/Section 8
Light-Weight Concrete — Part 6/Section 7A
Lighting — Part 8/Section 1
Lightning Electromagnetic Impulse — Part 8/Section 2
Lightning Protection — Part 8/Section 2
Lightning Protection Level (LPL) — Part 8/Section 2
Lightning Protection System (LPS) — Part 8/Section 2
Lightning Protection Zone — Part 8/Section 2
Lignin — Part 6/Section 3B
Line Conductor — Part 8/Section 2
Linear Defects — Part 6/Section 8
Limit State — Part 6/Section 6
Liquefaction — Part 6/Section 1
Lithological Features — Part 6/Section 1
Live Knot — Part 6/Section 3A
Live or Alive — Part 8/Section 2
Live Load — Part 6/Section 6
Live Part — Part 8/Section 2
Load — Part 6/Section 6
Load Bearing Wall — Part 6/Section 4
Load Carrying Unit — Part 8/Section 5B
Loaded Edge Distance — Part 6/Section 3A
Loaded End or Compression End Distance — Part 6/Section 3B
Local Area Network (LAN) — Part 8/Section 6
Local Exhaust Ventilation– Part 8/Section 1
Local Multipoint Distribution System (LMDS) — Part 8/Section 6
Location — Part 6/Section 3A
Locations, Industrial– Part 8/Section 2
Locations, Non-Industrial — Part 8/Section 2
Loft — Part 3
Loose Grain (Loosened Grain) — Part 6/Section 3A
Loose Knot — Part 6/Section 3A
Lower Inner Decking — Part 8/Section 5B
Lower Outer Decking — Part 8/Section 5B
Low Rise Building — Part 6/Section 1
Low-Voltage Switchgear and Controlgear Assembly — Part 8/Section 2
Lumen — Part 8/Section 1
Luminaire — Part 8/Section 2
Luminance (at a Point of a Surface in a Given Direction) (Brightness) — Part 8/Section 1
Luminous Flux — Part 8/Section 1

M

M2M — Part 8/Section 6
Machete — Part 6/Section 3B
Machinery — Part 8/Section 5B
Machinery Spaces — Part 8/Section 5B
Maximum Capacity — Part 8/Section 5B
Made-Up Ground — Part 6/Section 2
Main Cross-connect — Part 8/Section 6
Main Distribution Frame (MDF) — Part 8/Section 6
Main Drain — Part 9/Section 1
Main Earthing Terminal — Part 8/Section 2
Main Member — Part 6/Section 6
Main Soil Pipe (MSP) — Part 9/Section 2
Main Soil and Waste Pipe (MSWP) — Part 9/Section 2
Main Vent Pipe (MVP) — Part 9/Section 2
Main Waste Pipe (MWP) — Part 9/Section 2
Maintenance — Part 12
Maintenance Factor — Part 8/Section 1
Maintenance Management — Part 12
Maintenance Manual — Part 12
Maintenance Organization — Part 8/Section 5A
Maintenance Plan — Part 12
Maintenance Policy — Part 12
Maintenance Programme — Part 12
Maintenance Strategy — Part 12
Make-Up Air — Part 8/Section 1
Make-Up Water — Part 9/Section 1
Management System — Part 12
Manhole — Part 9/Section 2
Manhole Chamber — Part 9/Section 2
Manifestation — Part 6/Section 8
Manifold — Part 9/Section 4
Manoeuvring Zone — Part 3
Mansard — Part 10/Section 2

Mantrap — Part 12
Marquee Sign– Part 10/Section 2
Masonry — Part 6/Section 4
Masonry Unit — Part 6/Section 4
Mass Rapid Transit — Part 4
Master Plan — Part 3
Mat — Part 6/Section 3B
Material Handling Hoists — Part 7
Maximum Thickness — Part 6/Section 8
Mean Ground Level — Part 6/Section 1
Mean Outer Diameter — Part 6/Section 3B
Mean Radiant Temperature — Part 8/Section 3
Mean Wall Thickness — Part 6/Section 3B
Means of Egress — Part 4
Means of Escape — Part 4
Measured Speed — Part 8/Section 5B
Mechanical Ventilation — Part 8/Section 1
Mechanically Laminated — Part 6/Section 3A
Mercantile Buildings — Part 6/Section 1
Meridian — Part 8/Section 1
Meshed Bonding Network (MESH-BN) — Part 8/Section 2
Metropolitan Area Network (MAN) — Part 8/Section 6
Mezzanine Floor — Part 3
Metro-station — Part 4
Microclimate — Part 10/Section 1
Mill Tolerance — Part 6/Section 6
Miniature Circuit Breaker (MCB) — Part 8/Section 2
Minimum Thickness — Part 6/Section 8
Mixed Mode Building — Part 8/Section 3
Mixed Occupancy — Part 4
Mobile Equipment — Part 8/Section 2
Modal Mass in Mode of a Structure — Part 6/Section 1
Modal Participation Factor — Part 6/Section 1
Modes of Oscillation — Part 6/Section 1
Modular Co-ordination — Part 6/Section 7A, Part 6/Section 7B
Modular Grid — Part 6/Section 7A, Part 6/Section 7B
Module — Part 6/Section 7A, Part 6/Section 7B
Modulus of Elasticity (Young's Modulus) — Part 6/Section 8
Moment Resistant Frame — Part 6/Section 4
Moment Resistant Frame with Shear Walls — Part 6/Section 4
Monitoring — Part 8/Section 2
Monolithic Glass — Part 6/Section 8
Mortise and Tenon — Part 6/Section 3B
Mould — Part 6/Section 3A
Moulded Case Circuit Breaker (MCCB) — Part 8/Section 2
Mound — Part 10/Section 1
Moving Walk — Part 8/Section 5B
Mulching — Part 10/Section 1
Mullion — Part 6/Section 8
Multichannel Multipoint Distribution System (MMDS) — Part 8/Section 6
Multimodule — Part 6/Section 7A, Part 6/Section 7B
Multiple Earthed Neutral System — Part 8/Section 2
Multiple Occupancy — Part 4
Multi-User Telecommunications Outlet Assembly (MUTOA) — Part 8/Section 6
Municipal Authority — Part 9/Section 3
Municipal Solid Waste — Part 9/Section 3

N

Native Plant — Part 10/Section 1
Natural Period in Mode of Oscillation — Part 6/Section 1
Natural Ventilation — Part 8/Section 1
Naturalised Plant — Part 10/Section 1
Naturally Conditioned Building — Part 8/Section 3
Negative Skin Friction — Part 6/Section 2
Net Section — Part 6/Section 3B
Neutral Conductor — Part 8/Section 2
Newel — Part 8/Section 5B
Node — Part 6/Section 3B
Noise — Part 8/Section 4
Noise Exposure Forecast (NEF) — Part 8/Section 4
Noise Criteria — Part 8/Section 4
Noise Rating (NR) — Part 8/Section 4
Noise Reduction Co-efficient (NRC) — Part 8/Section 4
Nominal/Rated Speed — Part 8/Section 5B
Nominal Thickness — Part 6/Section 8
Nominal Travel Time — Part 8/Section 5A
Non-Combustible Material — Part 6/Section 8
Non-Renewable Resource — Part 11
Non-Selective Collective Automatic Operation — Part 8/Section 5A
Non-transit Occupancy — Part 4
Normal Mode of Oscillation — Part 6/Section 1
Normal Operation — Part 8/Section 5A
Normal Stress — Part 6/Section 6
Normalized Impact Sound Pressure Level — Part 8/Section 4
North and South Points — Part 8/Section 1

O

Occupancy or Use Group — Part 2, Part 3, Part 4

The principal occupancy for which a building or a part of a building is used or intended to be used; for the purposes of classification of a building according to occupancy, an occupancy shall be deemed to include the subsidiary occupancies which are contingent upon it.

Occupant Load — Part 4

Occupants — Part 12

Occupier — Part 2

Octave Band — Part 8/Section 4

Office Buildings — Part 6/Section 1

**Offset* — Part 6/Section 2, Part 9/Section 1, Part 9/Section 2

Oil Buffer — Part 8/Section 5A

Oil Buffer Stroke — Part 8/Section 5A

Open Clusters — Part 3

Open Sign — Part 10/Section 2

Open Space — Part 3

Open Space, Front — Part 3

Open Space, Rear — Part 3

Open Space, Side — Part 3

Open Station — Part 4

Operable Parts — Part 3

Operating Device — Part 8/Section 5A

Operation — Part 8/Section 5A

Operational Construction/Installation — Part 2

Operational Plan — Part 12

Operational Strategy — Part 12

Operative Temperature — Part 8/Section 3

Operator of a Facility — Part 9/Section 3

Optical Distribution Frame — Part 8/Section 6

Optical Fibre — Part 8/Section 6

Orientation of Buildings — Part 8/Section 1

Organic Coated Glass — Part 6/Section 8

Origin of an Electrical Installation — Part 8/Section 2

Outer Diameter — Part 6/Section 3B

Outside Location — Part 6/Section 3A, Part 6/Section 3B

Outside Plant (OSP) — Part 8/Section 6

Overcurrent — Part 8/Section 2

Overload Current (of a Circuit) — Part 8/Section 2

Over Speed Governor — Part 8/Section 5A

Overhead Beams — Part 8/Section 5A

Owner — Part 0, Part 2, Part 3, Part 10/Section 2

A person, a group of persons or a body having a legal interest in land and/or building thereon. This includes freeholders, leaseholders or those holding a sub-lease who will have legal right to occupation and have liabilities in respect of safety or building condition.

In case of lease or sub-lease holders, as far as ownership with respect to the structure is concerned, the structure of a flat or structure on a plot belongs to the allottee/lessee till the allotment/lease subsists.

Ozone Depletion Potential (ODP) — Part 8/Section 3

P

Pane — Part 6/Section 8

Panel — Part 6/Section 8

Panel Wall — Part 6/Section 4

Parapet — Part 3, Part 10/Section 2

Parking Space — Part 3

Partial Safety Factor — Part 6/Section 6

Partition — Part 3, Part 6/Section 8

Partition Wall — Part 6/Section 4

Partly Framed or Unframed Glazing — Part 6/Section 8

Passenger Arrival Rate — Part 8/Section 5A

Passenger Average Transfer — Part 8/Section 5A

Passenger Average Waiting Time (AWT) — Part 8/Section 5A

Passenger Lift — Part 8/Section 5A

Passive Cooling — Part 8/Section 3

Passive Heating — Part 8/Section 3

Passive Solar Gain — Part 6/Section 8

Patterned Glass — Part 6/Section 8

Peak Ground Acceleration — Part 6/Section 1

Peak Gust — Part 6/Section 1

Peak to Peak Vibration Levels — Part 8/Section 5A

Peat — Part 6/Section 2

Pelletization — Part 9/Section 3

Percentile Level — Part 8/Section 4

Perimeter Intrusion Detection and Assessment System (PIDAS) — Part 12

Perimeter Security — Part 12

Period of Structural Adequacy under Fire — Part 6/Section 6

Period of Supply — Part 9/Section 1

Peripheral Field — Part 8/Section 1

Permanent Load — Part 6/Section 2

Permeable Paving– Part 10/Section 1

Permissible Stress — Part 6/Section 3A, Part 6/Section 3B, Part 6/Section 6

Permit — Part 2

* Definitions are different.

Persons with Disabilities — Part 3
PEN Conductor — Part 8/Section 2
Phase Conductor — Part 8/Section 2
Physical Asset — Part 12
Pier — Part 6/Section 4
Pile Foundation — Part 6/Section 2
Pile Rig — Part 7
Pile Spacing — Part 6/Section 2
Pilot — Part 9/Section 4
Pink Noise — Part 8/Section 4
Pipe System — Part 9/Section 2
Pipe Work — Part 9/Section 1
Pit — Part 8/Section 5B
Pitch — Part 6/Section 6
Pitch Pocket — Part 6/Section 3A
Place of Comparative Safety — Part 4
Planned Preventive Maintenance — Part 12
Platform — Part 7
Plastic Collapse — Part 6/Section 6
Plastic Design — Part 6/Section 6
Plastic Hinge — Part 6/Section 6
Plastic Moment — Part 6/Section 6
Plastic Section — Part 6/Section 6
Plenum — Part 8/Section 3
Plinth — Part 3

The portion of a structure between the surface of the surrounding ground and surface of the floor, immediately above the ground.

Plinth Area — Part 3

The built up covered area measured at the floor level of the basement or of any storey.

Plug — Part 8/Section 2
Plumbing — Part 9/Section 1, Part 9/Section 2
Plumbing System — Part 9/Section 1, Part 9/Section 2
Pocket Type Reinforced Masonry — Part 6/Section 4
Point of Safety — Part 4
Point (in Wiring) — Part 8/Section 2
Poisson's Ratio — Part 6/Section 6
Pool — Part 9/Section 1
Pool Depth — Part 9/Section 1
Porch — Part 3
Portable Equipment — Part 8/Section 2
Portable Sign– Part 10/Section 2
Position and/or Direction Indicator — Part 8/Section 5A
Positive Ventilation — Part 8/Section 1, Part 8/Section 3
Post-Tensioning — Part 6/Section 5B
Potable Water — Part 9/Section 1
Pre-tensioning — Part 6/Section 5B
Precast Concrete Piles in Prebored Holes — Part 6/Section 2
Precast Driven Pile — Part 6/Section 2
Predictive Action — Part 12
Predicted Service Life — Part 12
Prefabricate — Part 6/Section 7A, Part 6/Section 7B
Prefabricated Building — Part 6/Section 7A, Part 6/Section 7B
Preloading — Part 6/Section 2
Premises — Part 9/Section 1, Part 9/Section 2
Pressure Coefficient — Part 6/Section 1
Pressure Balancing Valve — Part 9/Section 1
Pressure Regulator — Part 9/Section 4
Pressurization — Part 4
Pressurization Level — Part 4
Prestressed Concrete — Part 6/Section 5B
Preventive Action — Part 12
Preventive Maintenance — Part 12
Primary Collection — Part 12
Principal Rafter — Part 6/Section 3B
Prism — Part 6/Section 4
Processing — Part 9/Section 3
Projecting Sign — Part 10/Section 2
Proof Stress — Part 6/Section 6
Proof Testing — Part 6/Section 6
Propagation Delay — Part 8/Section 6
Propeller Fan — Part 8/Section 1
Prospective Fault Current (I_{pf}) — Part 8/Section 2
Protection, Ingress — Part 8/Section 2
Protection, Mechanical Impact — Part 8/Section 2
Protective Coating(s) Faults — Part 6/Section 8
Protective Conductor — Part 8/Section 2
Protective Conductor Current — Part 8/Section 2
Protective Earthing — Part 8/Section 2
Protective Separation — Part 8/Section 2
Prototype Testing — Part 6/Section 6
Prying Force — Part 6/Section 6
Psychrometric Chart — Part 8/Section 3
Public Mobile Network — Part 8/Section 6
Public Way — Part 4
Puff Ventilation — Part 9/Section 2
Pure Tone — Part 8/Section 4
Purge — Part 9/Section 4
Purlins — Part 6/Section 3B

Q

Qualified Installing Agency — Part 9/Section 4

Quetta Bond Reinforced Masonry — Part 6/Section 4

R

Radio Frequency — Part 8/Section 6

Ramp — Part 3, Part 4

RASCI Chart — Part 12

Rated Current — Part 8/Section 2

Rated Impulse Withstand Voltage Level — Part 8/Section 2

Rated Load (Lift) — Part 8/Section 5A

Rated Load — Part 8/Section 5B

Rated Speed (Lift) — Part 8/Section 5A

Rating Level — Part 8/Section 4

Rebate — Part 6/Section 8

Recirculated Air — Part 8/Section 3

Recycling — Part 9/Section 3, Part 11

Reflected Glare — Part 8/Section 1

Reflection Factor (Reflectance) — Part 8/Section 1

Reflective Coated Glass — Part 6/Section 8

Reflective Silver Coating Faults — Part 6/Section 8

Refrigerant — Part 8/Section 3

Refuge Area — Part 4

Registered Architect, Engineer, Structural Engineer, Geotechnical Engineer, Supervisor, Town Planner, Landscape Architect, Urban Designer — Part 2

Regulatory Sign — Part 10/Section 2

Reinforced Brick Slab (RB Slab) — Part 6/Section 4

Reinforced Brick Concrete Slab (RBC Slab) — Part 6/Section 4

Reinforced Masonry — Part 6/Section 4

Relative Humidity — Part 8/Section 3

Relaxation — Part 6/Section 5B

Reliability Centered Maintenance (RCM) — Part 12

Renewable Resource — Part 11

Repair, Renovate, Refurbish — Part 12

Retaining Device — Part 8/Section 5A

Residential Buildings — Part 6/Section 1

Residual Current — Part 8/Section 2

Residual Current Device — Part 8/Section 2

Residual Current Operated Circuit Breaker — Part 8/Section 2

Residual Current Operated Circuit Breaker with Integral Overcurrent Protection (RCBO) — Part 8/Section 2

Residual Current Operated Circuit Breaker without Integral Overcurrent Protection (RCCB) — Part 8/Section 2

Residual Head — Part 9/Section 1

Residual Operating Current — Part 8/Section 2

Residual Pressure — Part 9/Section 1

Residual Protection — Part 6/Section 8

Residual Waste — Part 12

Response Acceleration Coefficient of a Structure — Part 6/Section 1

Response Reduction Factor — Part 6/Section 1

Response Spectrum — Part 6/Section 1

Retiring Cam — Part 8/Section 5A

Return Period — Part 6/Section 1

Return Air — Part 8/Section 3

Reuse — Part 11

Reveal — Part 8/Section 1

Reverberation Time — Part 8/Section 4

Rheostatic Control — Part 8/Section 5A

Ride Quality — Part 8/Section 5B

Rise (Travel) — Part 8/Section 5B

Riser — Part 9/Section 4

Road — Part 2, Part 3

Road Line — Part 2, Part 3

Roof Battens — Part 6/Section 3B

Roof Exits — Part 4

Roof Sign — Part 10/Section 2

Roof Skeleton — Part 6/Section 3B

Room Height — Part 2, Part 3

The vertical distance measured from the finished floor surface to the finished ceiling surface. Where a finished ceiling is not provided, the underside of the joists or beams or tie beams shall determine the upper point of measurement for determining the head room.

Room Index — Part 8/Section 1

Root Cause Analysis — Part 12

Roping Multiple — Part 8/Section 5A

Rotation — Part 6/Section 6

Round Trip Time (RTT) — Part 8/Section 5A

Routine Test — Part 6/Section 2

Row Housing/Row Type Building — Part 3

S

S-N Curve — Part 6/Section 6

Saddle — Part 9/Section 1, Part 9/Section 2

Safe Load — Part 6/Section 2

Safety Circuit — Part 8/Section 5B

Safety Devices — Part 8/Section 5B

Safety Gear — Part 8/Section 5A

Sanctioned Plan — Part 2

Sand — Part 6/Section 2

Sand, Coarse — Part 6/Section 2

Sand, Fine — Part 6/Section 2

Sand, Medium — Part 6/Section 2

Sandwich Concrete Panels — Part 6/Section 7A, Part 6/Section 7B

Sandwich, Structural — Part 6/Section 3A

Sanitary Appliances — Part 9/Section 2

Sanitary Land Filling — Part 12

Sanitary Waste — Part 12

Sap Stain — Part 6/Section 3A

Sapwood — Part 6/Section 3A

Scaffold — Part 7

Scope Creep — Part 12

Screen — Part 10/Section 1

Secondary Collection — Part 12

Secondary Member — Part 6/Section 6

Secondary Storage — Part 12

Sediment — Part 10/Section 1

Seismic Mass of Floor — Part 6/Section 1

Seismic Mass of Structure — Part 6/Section 1

Seismic Mode — Part 8/Section 5A

Seismic Stand-by Mode — Part 8/Section 5A

Seismic Trigger Level — Part 8/Section 5A

Seismic Weight of Floor — Part 6/Section 1.

Seismic Weight of Structure — Part 6/Section 1

Seismic Zone Factor — *Part* 6/Section 1

Segregation — Part 9/Section 3

Seismic Zone and Seismic Coefficient — Part 6/Section 4

Selective Collective Automatic Operation — Part 8/Section 5A

Self-Compacting Concrete — Part 6/Section 7A, Part 6/Section 7B

Semi-Compact Section — Part 6/Section 6

Semi-Detached Building — Part 3

Separation Section — Part 6/Section 4

Sensible Cooling — Part 8/Section 3

Sensible Heat — Part 8/Section 3

Server — Part 8/Section 6

Service — Part 8/Section 2

Service Life — Part 12

Service Lift — Part 8/Section 5A

**Service Pipe* — Part 9/Section 1, Part 9/Section 4

Service Road — Part 2, Part 3

Service Shut-Off Valve (Isolation Valve) — Part 9/Section 4

Serviceability Limit State — Part 6/Section 6

---

* Definitions are different.

Set-Back Line — Part 2, Part 3

A line usually parallel to the plot boundaries and laid down in each case by the Authority, beyond which nothing can be constructed towards the site boundaries.

Sewer — Part 9/Section 2

Shade Factor — Part 8/Section 3

Shading Coefficient — Part 6/Section 8

Shake — Part 6/Section 3A

Shallow Area — Part 9/Section 1

Shallow Foundation — Part 6/Section 2

Shear Connectors — Part 6/Section 7A, Part 6/Section 7B

Shear Force — Part 6/Section 6

Shear Lag — Part 6/Section 6

Shear Stress — Part 6/Section 6

Shear Wall — Part 6/Section 4

Sheathing — Part 6/Section 5B

Sheave — Part 8/Section 5A

Sheet Glass — Part 6/Section 8

Shelterbelt — Part 10/Section 1

Shielding Effect — Part 8/Section 2

Shock Current — Part 8/Section 2

Short-Circuit Current — Part 8/Section 2

Short Column — Part 6/Section 5B

Shrinkage Loss — Part 6/Section 5B

Shrub — Part 10/Section 1

Shutdown/Outage — Part 12

Sick Building Syndrome (SBS) — Part 8/Section 3

Sign — Part 10/Section 2

Sign Area — Part 10/Section 2

Sign Copy — Part 10/Section 2

Sign Face — Part 10/Section 2

Sign Structure — Part 10/Section 2

Signal Operation — Part 8/Section 5A

Silt — Part 6/Section 2

Silver — Part 6/Section 3B

Single Automatic Operation — Part 8/Section 5A

Single Floor Flight Time — Part 8/Section 5A

Single Floor Transit Time — Part 8/Section 5A

Single-Speed Alternating Current Control– Part 8/Section 5A

Site (Plot) — Part 2, Part 3, Part 4

A parcel (piece) of land enclosed by definite boundaries.

Site, Corner — Part 3

Site, Depth of — Part 3

Site, Double Frontage — Part 3
Site, Interior or Tandem — Part 3
Skimmer — Part 9/Section 1
Skirt Deflector — Part 8/Section 5B
Skirting — Part 8/Section 5B
Sky Component (SC) — Part 8/Section 1
Sky Lobby — Part 8/Section 5A
Sky Sign — Part 10/Section 2
Skylight — Part 6/Section 8
Skylight Roof Ratio (SRR) — Part 11
Slack Rope Switch — Part 8/Section 5A
Slender Column — Part 6/Section 5B
Slender Section — Part 6/Section 6
Slenderness Ratio — Part 6/Section 3B, Part 6/Section 4, Part 6/Section 6
Slip Resistance — Part 6/Section 6
Sliver — Part 6/Section 3B
Slop Hopper (Slop Sink) — Part 9/Section 2
Slope of Grain — Part 6/Section 3A
Sloped Overhead Glazing — Part 6/Section 8
Smart City/Building/Home — Part 8/Section 6
**Smoke Barrier* — Part 4, Part 8/Section 3
Smoke Compartment — Part 4
Smoke Damper — Part 8/Section 3
Smoke Management — Part 8/Section 3
Snag Point — Part 8/Section 5A
Snow Load — Part 6/Section 6
Snug Tight — Part 6/Section 6
Soakaway — Part 9/Section 2
Socket-Outlet — Part 8/Section 2
Soffit (Crown) — Part 9/Section 2
Soft Landscape– Part 10/Section 1
Soft Rock — Part 6/Section 2
Soil Appliances — Part 9/Section 2
Soil Densification — Part 6/Section 2
Soil, Highly Organic and Other Miscellaneous Soil — Part 6/Section 2
Soil Pipe — Part 9/Section 2
Soil Reinforcement — Part 6/Section 2
Soil Waste — Part 9/Section 2
Soil, Black Cotton — Part 6/Section 2
Soil, Coarse Grained — Part 6/Section 2
Soil, Fine Grained — Part 6/Section 2
Soil, Highly Organic and Other Miscellaneous Soil Materials — Part 6/Section 2
Solar Energy Absorption — Part 6/Section 8
Solar Energy Transmittance (Direct) — Part 6/Section 8
Solar Heat Gain Coefficient (SHGC) — Part 6/Section 8
Solar Load — Part 8/Section 1
Solar Reflectance Index — Part 11
Solid-State d.c. Variable Voltage Control — Part 8/Section 5A
Solidity Ratio — Part 6/Section 1
Sound — Part 8/Section 4, Part 8/Section 5A
Sound Exposure Level — Part 8/Section 4
Sound Knot — Part 6/Section 3A
Sound Level Difference — Part 8/Section 4
Sound Power — Part 8/Section 4
Sound Power Level — Part 8/Section 4
Sound Pressure Level, L_p — Part 8/Section 4, Part 8/Section 5B
Sound Pressure Level, $L_{p,A}$ — Part 8/Section 5A
Sound Pressure, p — Part 8/Section 4
Sound Receiver — Part 8/Section 4
Sound Reduction Index, R — Part 8/Section 4
Sound Source — Part 8/Section 4
Space — Part 3
Space Factor — Part 8/Section 2
Space Frame — Part 6/Section 4
Spaced Column — Part 6/Section 3A
Spandrel — Part 6/Section 8
Specified Compressive Strength of Masonry — Part 6/Section 4
Spectrum — Part 8/Section 4
Speech Interference Level (SIL) — Part 8/Section 4
Splicing — Part 8/Section 6
Split — Part 6/Section 3A
Splits — Part 6/Section 3B
Spot Elevation — Part 10/Section 1
Spot Faults — Part 6/Section 8
Spray-Head System– Part 8/Section 1
Spread (or Isolated or Pad) Foundation/Footing — Part 6/Section 2
Spring Buffer– Part 8/Section 5A
Spring Buffer Load Rating– Part 8/Section 5A
Spring Buffer Stroke– Part 8/Section 5A
Stability Limit State — Part 6/Section 6
Stabilization — Part 12
Stack Effect — Part 8/Section 1, Part 8/Section 3
Stack Pressure — Part 4
Stack Vent — Part 9/Section 2
Stain — Part 6/Section 8
Staircover (or Mumty) — Part 3
Stakeholder — Part 12

* Definitions are different.

Standardized Impact Sound Pressure Level — Part 8/Section 4
Standby Supply System — Part 8/Section 2
Standardized Level Difference — Part 8/Section 4
Static Pressure — Part 8/Section 3, Part 9/Section 1
Station — Part 4
Stationary Equipment — Part 8/Section 2
Station Platform — Part 4
Step Voltage — Part 8/Section 2
Stickability — Part 6/Section 6
Stiffener — Part 6/Section 6
Stock/Standard Sizes — Part 6/Section 8
Stop Tap — Part 9/Section 1
Stop-Cock — Part 9/Section 1
Storage — Part 9/Section 3
Storage Buildings — Part 6/Section 1
Storage Tank — Part 9/Section 1
Storey — Part 3

The portion of a building included between the surface of any floor and the surface of the floor next above it, or if there be no floor above it, then the space between any floor and the ceiling next above it.

Storey, Topmost — Part 3
Street — Part 2, Part 3

Any means of access, namely, highway, street, lane, pathway, alley, stairway, passageway, carriageway, footway, square, place or bridge, whether a thoroughfare or not, over which the public have a right of passage or access or have passed and had access uninterruptedly for a specified period, whether existing or proposed in any scheme and includes all bunds, channels, ditches, storm-water drains, culverts, sidewalks, traffic islands, roadside trees and hedges, retaining walls, fences, barriers and railings within the street lines.

Street/Outdoor Furniture — Part 10/Section 1
Street Level or Grade — Part 2, Part 3

The officially established elevation or grade of the centre line of the street upon which a plot fronts and if there is no officially established grade, the existing grade of the street at its mid-point.

Street Line — Part 2, Part 3, Part 10/Section 2

The line defining the side limits of a street.

Strain — Part 6/Section 6
Strain Hardening — Part 6/Section 6
Strength — Part 6/Section 6
Strength Limit State — Part 6/Section 6
Stress — Part 6/Section 6
Stress Analysis — Part 6/Section 6
Stress at Transfer — Part 6/Section 5B
Stress Cycle Counting — Part 6/Section 6
Stress Range — Part 6/Section 6
Stress Spectrum — Part 6/Section 6
Stressed Skin — Part 6/Section 3A
Strip Foundation/Footing — Part 6/Section 2
Structural Adequacy for Fire — Part 6/Section 6
Structural Analysis — Part 6/Section 6
Structural Element — Part 6/Section 3A
Structural Grades — Part 6/Section 3A
Structural Timber — Part 6/Section 3A
Structure Borne Noise — Part 8/Section 4
Structure, Permanent– Part 6/Section 3A
Structure, Temporary — Part 6/Section 3A
Strut — Part 6/Section 6
Stud — Part 6/Section 3A
Studio Apartment — Part 9/Section 1
Subsoil Water — Part 9/Section 1, Part 9/Section 2
Subsoil Water Drain — Part 9/Section 1, Part 9/Section 2
Sub-zero Temperature Regions — Part 9/Section 1
Suction — Part 6/Section 1
Sullage — Part 9/Section 2
Supply Air — Part 8/Section 3
Supply Pipe — Part 9/Section 1, Part 9/Section 2
Supports — Part 9/Section 1, Part 9/Section 2
Surface Coefficient — Part 11
Surface Cracking — Part 6/Section 3B
Surface Resistance — Part 11
Surface Water — Part 9/Section 1, Part 9/Section 2
Surface Water Drain — Part 9/Section 1, Part 9/Section 2
Surge — Part 8/Section 2
Surge Protective Devices — Part 8/Section 2
Surveillance — Part 12
Surveillance Devices — Part 12
Suspension Ropes — Part 8/Section 5A
Sustainability — Part 11
Sustainable Buildings — Part 11
Sustainable Development — Part 11
Swale — Part 10/Section 1
Sway — Part 6/Section 6
Sway Member — Part 6/Section 6
Swimming Pool User Load — Part 9/Section 1

Switch Disconnector — Part 8/Section 2
Switch Disconnector Fuse — Part 8/Section 2
Switch — Part 8/Section 2
Switch, Linked — Part 8/Section 2
Switchboard — Part 8/Section 2
Switchgear — Part 8/Section 2
System — Part 6/Section 7A, Part 6/Section 7B
System (Electrical) — Part 8/Section 2
Systems of Drainage — Part 9/Section 2

T

Tactile — Part 3
Tactile Ground Surface Indicators -- Part 3
Tactile Guiding Blocks — Part 3
Tactile Warning Blocks — Part 3
Tactile Signs — Part 3
Taper — Part 6/Section 3B
Tall Building — Part 6/Section 1
Telecommunication Spaces — Part 8/Section 6
Telecom Service Provider (TSP) — Part 8/Section 6
Telecom Tower — Part 8/Section 6
Telecommunication Media and Connecting Hardware — Part 8/Section 6
Tendon — Part 6/Section 5B
Tensile Stress — Part 6/Section 6
Tempered Fire Resistant Glass — Part 6/Section 8
Tempered or Toughened Glass — Part 6/Section 8
Temporary Sign — Part 10/Section 2
Terminal Devices — Part 8/Section 3
Terminal Slow Down Switch — Part 8/Section 5A
Terminal Stopping Device Final — Part 8/Section 5A
Terminal Stopping Switch Normal– Part 8/Section 5A
Termite — Part 6/Section 3A
Terrain Category — Part 6/Section 1
Test Load — Part 6/Section 6
Thermal Absorptivity — Part 11
Thermal Adaptation — Part 8/Section 3
Thermal Capacity — Part 11
Thermal Conductance (C) — Part 11
Thermal Conductivity (k) — Part 11
Thermal Comfort — Part 8/Section 3, Part 11
Thermal Energy Storage — Part 8/Section 3
Thermal Insulation Material — Part 8/Section 3
Thermal Reflectivity — Part 11
Thermal Resistance (R) — Part 11
Thermal Resistivity (1/k) — Part 11
Thermal Transmittance — Part 11
Thermal Transmittance, U-Value — Part 6/Section 8
Thermal Transmission or Rate of Heat Flow (q) — Part 11
Thermostatic/Pressure Balancing Valve — Part 9/Section 1
Third Octave Band — Part 8/Section 4
Threshold Limit Value (TLV) — Part 8/Section 1
Threshold of Hearing — Part 8/Section 4
Through Component/Connection — Part 6/Section 8
Tight Knot — Part 6/Section 3A
Time History Analysis — Part 6/Section 1
Tinted Glass — Part 6/Section 8
Tissue — Part 6/Section 3B
To Abut — Part 3
To Erect — Part 2, Part 3
Toe Board — Part 7
Top Car Clearance — Part 8/Section 5A
Top Counterweight Clearance — Part 8/Section 5A
Topography — Part 6/Section 1
Topsoil — Part 10/Section 1
Total Headroom — Part 8/Section 5A
Total Settlement — Part 6/Section 2
Total Thermal Resistance — Part 11
Touch Voltage — Part 8/Section 2
Toughened Sheet Safety (Tempered) Glass — Part 6/Section 8
Tower-Like Structures — Part 3
Trade Effluent — Part 9/Section 2
Transfer — Part 6/Section 5B
Transient Sound — Part 8/Section 4
Transition Point — Part 9/Section 1
Transmission Length — Part 6/Section 5B
Transom — Part 6/Section 8
Transplanting — Part 10/Section 1
Transportation — Part 9/Section 3
Transverse — Part 6/Section 6
Trap — Part 9/Section 2
Travel — Part 8/Section 5A
Travel Distance — Part 4
Tree — Part 10/Section 1
Tree Drip Line — Part 10/Section 1
Tree Grate — Part 10/Section 1
Tree/Plant Guard — Part 10/Section 1
Tropical Summer Index (TSI) — Part 8/Section 1, Part 11
Turnover Period — Part 9/Section 1
Two-Speed Alternating Current Control– Part 8/Section 5A
Types of Walls — Part 6/Section 4

U

Ultimate Load Capacity — Part 6/Section 2
Ultimate Limit State — Part 6/Section 6
Ultimate Stress — Part 6/Section 6
Underground Cable Vault (UCV) — Part 8/Section 6
Under-Reamed Pile — Part 6/Section 2
Unframed Glazing — Part 6/Section 8
Unisex Accessible Toilet — Part 3
Unit — Part 6/Section 7A, Part 6/Section 7B
Universal Design — Part 3
Unloaded End Distance — Part 6/Section 3B
Unobstructed Width — Part 3
Unobstructed Width, Door — Part 3
Unsafe Building — Part 2
Usable Wall Space — Part 8/Section 2
Utility Building — Part 8/Section 2
Utilization Factor (Coefficient of Utilization) — Part 8/Section 1
UV Transmittance — Part 6/Section 8

V

V95 — Part 8/Section 5A
Variable Refrigerant Flow (VRF) Cooling System — Part 8/Section 3
Variable Voltage Motor Control (Generator Field Control) — Part 8/Section 5A
Velocity — Part 8/Section 5A, Part 8/Section 5B
Velocity, Capture — Part 8/Section 1
Velocity Pressure — Part 8/Section 3
Velocity Profile — Part 6/Section 1
Veneered Wall — Part 6/Section 4
Vent Pipe — Part 9/Section 4
Vent Stack/Vent Pipe — Part 9/Section 2
Vent System — Part 9/Section 2
Ventilation — Part 4, Part 8/Section 1
Venting Fire — Part 4
Verandah — Part 3
Verandah Sign — Part 10/Section 2
Vermi-composting — Part 9/Section 3
Vertical Fenestration — Part 6/Section 8
Vertical Load Carrying Frame — Part 6/Section 4
Vertical Pipe — Part 9/Section 1, Part 9/Section 2
Vertical Solar Angle (VSA) — Part 11
Very Small Aperture Terminal — Part 8/Section 6
Vibration — Part 8/Section 5A, Part 8/Section 5B
Vibration Isolation — Part 8/Section 4
Visual Contrast — Part 3
Visual Field — Part 8/Section 1
Visual Light Transmittance (VLT) — Part 11
Visual Strobes/Flashing — Part 4
Volatile Organic Compound (VOC) — Part 11
Voltage, Extra Low (ELV) — Part 8/Section 2
Voltage, Extra High (EHV) — Part 8/Section 2
Voltage, High (HV) — Part 8/Section 2
Voltage, Low (LV) — Part 8/Section 2
Voltage, Medium (MV) — Part 8/Section 2
Voltage, Nominal (of an Installation) — Part 8/Section 2
Volume to Plot Area Ratio (VPR) — Part 3, Part 4

The ratio of volume of building, measured in cubic metre, to the area of the plot, measured in square metre, and expressed in metre.

W

Wading Pool — Part 9/Section 1
Walks (Walkways) — Part 3
Wall Hole — Part 7
Wall Opening — Part 7
Wall Sign — Part 10/Section 2
Wall Thickness — Part 6/Section 3B
Wall Tie — Part 6/Section 4
Wane — Part 6/Section 3A
Warning Pipe — Part 9/Section 1
Warp — Part 6/Section 3A
Wash-Out Valve — Part 9/Section 1
Waste — Part 11
Waste Appliance — Part 9/Section 2
Waste Pipe — Part 9/Section 2
Waste-Water (Sullage) — Part 9/Section 2
Water Based Systems — Part 4
Water Closet — Part 3, Part 9/Section 2
Water Closet Compartment/Toilet Cubicle — Part 3
Water Hammer Arrestor — Part 9/Section 1
Water Hardness — Part 8/Section 3
Water Level — Part 9/Section 1
Water Main (Street Main) — Part 9/Section 1
Water Mist Systems — Part 4
Water Outlet — Part 9/Section 1
Water Seal — Part 9/Section 2
Water Supply System — Part 9/Section 1
Water Treatment — Part 8/Section 3
Waterworks — Part 9/Section 1
Wavelength — Part 8/Section 4
Way Finding — Part 3
Weatherproof — Part 8/Section 2

Weighted Level Difference, D_w — Part 8/Section 4
Weighted Normalized Impact Sound Pressure Level, L'_{nw} — Part 8/Section 4
Weighted Sound Reduction Index, R_w — Part 8/Section 4
Weighted Standardized Impact Sound Pressure Level, $L'_{nT,w}$ — Part 8/Section 4
Weighted Standardized Level Difference, $D_{n,Tw}$ — Part 8/Section 4
**Wet Bulb Temperature* — Part 8/Section 1, Part 8/Section 3
Wet Location — Part 6/Section 3A, Part 6/Section 3B
Wet Riser — Part 4
Wheelchair User — Part 3
White Cane — Part 3
White Noise — Part 8/Section 4
Whole Life Costing — Part 12
Wide Area Network (WAN) — Part 8/Section 6
Wind Loads — Part 6/Section 6
Window — Part 3
Window Sign — Part 10/Section 2
Wired Glass — Part 6/Section 8
Working Load — Part 6/Section 2
Working Pile — Part 6/Section 2
Working Plane — Part 8/Section 1
Workstation — Part 8/Section 6
Workspace — Part 8/Section 6
Worm Holes — Part 6/Section 3A
Wrinkled and Deformed Surface — Part 6/Section 3B
Wythe — Part 6/Section 3A

X

Xeriscape — Part 10/Section 2

Y

Yield Stress — Part 6/Section 6

Z

Zero-Depth Edge — Part 9/Section 1
Zero-Depth Pool — Part 9/Section 1
Zone Factor — Part 6/Section 4

* Definitions are different.

NATIONAL BUILDING CODE OF INDIA

PART 2 ADMINISTRATION

BUREAU OF INDIAN STANDARDS

CONTENTS

FOREWORD ... 3

SECTION 1 GENERAL

1 SCOPE ... 5
2 TERMINOLOGY ... 5
3 APPLICABILITY OF THE CODE ... 6
4 INTERPRETATION ... 7
5 ALTERNATIVE MATERIALS, METHODS OF DESIGN AND CONSTRUCTION, AND TESTS ... 7

SECTION 2 ORGANIZATION AND ENFORCEMENT

6 DEPARTMENT OF BUILDINGS ... 7
7 POWER AND DUTIES OF TEAM OF BUILDING OFFICIALS ... 8
8 BOARD OF APPEALS ... 9
9 VIOLATIONS AND PENALTIES ... 9
10 POWER TO MAKE RULES ... 9

SECTION 3 PERMIT AND INSPECTION

11 DEVELOPMENT/BUILDING PERMIT ... 9
12 APPLICATION FOR DEVELOPMENT/BUILDING PERMIT ... 10
13 RESPONSIBILITIES AND DUTIES OF THE OWNER ... 15
14 INSPECTION, OCCUPANCY PERMIT AND POST-OCCUPANCY INSPECTION ... 16
15 UNSAFE BUILDING ... 17
16 DEMOLITION OF BUILDING ... 17
17 VALIDITY ... 17
18 ARCHITECTURAL CONTROL ... 17

ANNEX A GUIDE FOR THE QUALIFICATIONS AND COMPETENCE OF PROFESSIONALS ... 18
ANNEX B FORM FOR FIRST APPLICATION TO DEVELOP, ERECT, RE-ERECT OR TO MAKE ALTERATION IN ANY PLACE IN A BUILDING ... 21
ANNEX C FORM FOR CERTIFICATE FOR STRUCTURAL DESIGN SUFFICIENCY ... 22
ANNEX D FORM FOR ENGAGEMENT OF BUILDER/CONSTRUCTOR ... 23
ANNEX E FORM FOR SUPERVISION ... 24
ANNEX F FORM FOR SANCTION OR REFUSAL OF DEVELOPMENT/ BUILDING PERMIT ... 25
ANNEX G FORM FOR NOTICE FOR COMMENCEMENT ... 26
ANNEX H FORM FOR CERTIFICATE FOR SUBSURFACE INVESTIGATION ... 27
ANNEX J FORM FOR CERTIFICATE FOR COMPLETED STRUCTURAL DESIGN WORK AS PER STRUCTURAL SAFETY REQUIREMENTS ... 28
ANNEX K FORM FOR CERTIFICATE FOR SUPERVISION OF WORK ... 29
ANNEX M FORM FOR CERTIFICATE FOR COMPLETED WORK BY BUILDER/ CONSTRUCTOR ... 30
ANNEX N FORM FOR COMPLETION CERTIFICATE ... 31
ANNEX P FORM FOR OCCUPANCY PERMIT ... 32

FOREWORD

This Code (Part 2) covers the administrative aspects, such as applicability of the Code, organization of building department for enforcement of the Code, procedure for obtaining development and building permits, and responsibility of the owner and all related professionals.

A need for codifying and unifying administrative provisions in different development control rules and building byelaws had been felt, particularly in regard to the applicability of such provisions, desirable qualifications for the enforcing Authority and the representative of the owner and responsibilities and duties of the Authority and the owner.

It is expected that the town and country planning department, department of local bodies, municipal administration, urban development, etc, as the case may be will coordinate the administrative provisions of this Part and the same given in the State Town and Country Planning Act, Municipalities Act/Municipal Corporation/Local Bodies Act, Development Authorities Act, etc.

This Part recommends the setting up of a 'Board of Appeal'. The 'Board of Appeal' gives the owner/architect/ engineer an opportunity to defend the schemes which are based on conventional or new methods of design and construction or using new materials, which have been otherwise rejected by the Authority.

This Part also emphasizes the need for setting up an Arts Commission for metropolitan areas to safeguard existing aesthetics in the event of new schemes proposed for buildings of public importance or buildings coming up in an important area near historic/monumental buildings. The Commission can assist the civic authorities in reviewing plans for development from the stand point of assuring good taste and regard for often threatened natural beauties. The Commission can serve as a means whereby the government and public bodies and individuals could get advice on artistic questions in connection with building schemes.

The first version of this Part was brought out in 1970, which was subsequently revised in 1983 and 2005. As a result of implementing 1970 version of this Part in rewriting building byelaws and development control rules of some municipal corporations and municipalities, some useful suggestions were emerged. These were incorporated in the first revision to the extent possible. The significant changes in 1983 version of this Part included the new administrative provisions related to development control rules, additional information to be furnished/indicated in the building plan for multistoreyed and special buildings and modified provisions regarding submission of building plans by Government Departments to the Authority.

In the second revision, number of modifications were incorporated based on the experience gained over the years then. The provisions of this Part were thoroughly reviewed in the context of the natural calamities faced by the country then, such as the devastating earthquake in Gujarat in the year 2001, and provisions were modified accordingly to further ensure structural adequacy of the buildings. Structural design of buildings in accordance with the provisions of the Code and construction and supervision thereof by competent professionals to ensure structural safety were given due importance in the revision. Other significant modifications incorporated in the 2005 revision were: inclusion of the concept of team of building officials; provision of single window approach for permit for all services; provisions regarding computerization of approval process for building permit; provision to certify safety of buildings against natural disaster by engineer/structural engineer and owner; provision of two stage permit for high rise residential buildings and special buildings; provisions regarding inspection of completed and occupied building by the Authority from safety point of view; provision empowering engineers/architects for sanctioning plans of residential buildings up to 500 m^2; and modifications in the provisions for architectural control to effectively take care of the urban aesthetics, and inclusion of architectural engineer, landscape architect and urban designer among the registered professionals for the concerned applicable works.

In this third revision, number of modifications have been incorporated based on the experience gained over the years specially in the implementation of techno-administrative and techno-legal regime encountered and with a

view to strengthening the structural safety mechanism in building permit process. The significant modifications made in this revision are as follows:

a) Geotechnical engineer has been included among the registered professionals for the concerned applicable works;

b) With a view to ensuring ease of doing business in the built environment sector, a detailed provision for streamlining the approval process in respect of different agencies has been incorporated in the form of an integrated approval process through single window approach for enabling expeditious approval process, avoiding separate clearances from various authorities;

c) Provision on computerization of approval process has been detailed enabling online submission of plans, drawings and other details, and sanction thereof aiding in quicker approval process;

d) Provision has been made for getting the design, drawings and details of buildings peer reviewed/proof checked in case of important projects and projects having high complexity and sensitivity, before approving the same;

e) Responsibility of the owner seeking occupancy permit from the Authority has been detailed;

f) Provision of periodic audit of designated public buildings for accessibility for the elderly and persons with disabilities, has been included;

g) Qualification and competence of builder/constructor has been added along with the form for their engagement;

h) Form for certificate for subsurface investigation, wherever applicable, has been added;

Form for certificate for completed structural design work as per structural safety requirements has been included;

k) Form for certificate for supervision of work has been rationalized;

m) Form for certificate for completed work by constructor, has been added: and

n) Form for completion certificate has been rationalized.

The Sectional Committee responsible for the revision of the Code had examined the use of the words 'surveyor/ building surveyor/supervisor', etc, under various building byelaws with varying qualifications in different states. It was decided not to use the generic word 'surveyor' or such other words. The Sectional Committee had, on the other hand recommended association of various professionals for various job responsibilities depending upon their qualifications/competence.

The Sectional Committee observed that this Part has been so formulated as to ensure quality and safety in the whole gamut of activities primarily divided into planning, design, execution and supervision. This has been ensured by obtaining certification from the registered professionals involved in planning, design and supervision. Apart from these, various other persons are involved whose contribution may be duly taken into account depending on the type, nature, magnitude and complexity of the project, such as fire protection engineer, security system specialist, environment specialist/sustainability specialist, accessibility specialist, interior designer, project management consultant, etc, in proper planning, design, erection, commissioning and operation of buildings and built environment.

Also, it was noted that the words 'licencing/licensed, etc' were in use by local bodies in different states. The Sectional Committee, however, decided for use of words 'registration/registered, etc' for the same, which may be adopted uniformly. The registration requirements of professionals are given in Annex A.

NATIONAL BUILDING CODE OF INDIA

PART 2 ADMINISTRATION

SECTION 1 GENERAL

1 SCOPE

This Code (Part 2) covers the administrative aspects of the Code, such as applicability of the Code, organization of building department for enforcement of the Code, procedure for obtaining development and building permits, and responsibility of the owner.

NOTE — This Code is called the National Building Code of India, hereinafter referred to as 'the Code'.

2 TERMINOLOGY

For the purpose of this Part, the following definitions shall apply.

2.1 Accessory Use — Any use of the premises subordinate to the principal use and customarily incidental to the principal use.

2.2 Alteration — A change from one type of occupancy to another, or a structural change, such as an addition to the area or height, or the removal of part of a building, or any change to the structure, such as the construction of, cutting into or removal of any wall, partition, column, beam, joist, floor or other support, or a change to or closing of any required means of ingress or egress or a change to the fixtures or equipment.

2.3 Approved — Approved by the Authority having jurisdiction.

2.4 Authority Having Jurisdiction — The authority which has been created by a statute and which, for the purpose of administering the Code/Part, may authorize a committee or an official or an agency to act on its behalf; hereinafter called the 'Authority'.

2.5 Building — Any structure for whatsoever purpose and of whatsoever materials constructed and every part thereof whether used as human habitation or not and includes foundation, plinth, walls, floors, roofs, chimneys, plumbing and building services, fixed platforms, verandah, balcony, cornice or projection, part of a building or anything affixed thereto or any wall enclosing or intended to enclose any land or space and signs and outdoor display structures. Tents/ *Shamianahs*, tarpaulin shelters, etc, erected for temporary and ceremonial occasions with the permission of the Authority shall not be considered as building.

2.6 Building, Height of — The vertical distance measured, in the case of flat roofs from the average level of the ground around and contiguous to the building or as decided by the Authority to the terrace of last livable floor of the building adjacent to the external walls; and in the case of pitched roofs, up to the point where the external surface of the outer wall intersects the finished surface of the sloping roof, and in the case of gables facing the road, the midpoint between the eaves level and the ridge. Architectural features serving no other function except that of decoration shall be excluded for the purpose of measuring heights.

2.7 Building Line — The line up to which the plinth of a building adjoining a street or an extension of a street or on a future street may lawfully extend. It includes the lines prescribed, if any, in any scheme. The building line may change from time to time as decided by the Authority.

2.8 Conversion — The change of occupancy or premises to any occupancy or use requiring additional occupancy permit

2.9 Development — 'Development' with grammatical variations means the carrying out of building, engineering, mining or other operations in, or over, or under land or water, or in the use of any building or land, and includes redevelopment and layout and subdivision of any land; and 'to develop' shall be construed accordingly.

2.10 Drain — A conduit or channel for the carriage of storm water, sewage, waste water or other water-borne wastes in a building drainage system.

2.11 Drainage — The removal of any liquid by a system constructed for the purpose.

2.12 Occupancy or Use Group — The principal occupancy for which a building or a part of a building is used or intended to be used; for the purposes of classification of a building according to occupancy, an occupancy shall be deemed to include the subsidiary occupancies which are contingent upon it.

2.13 Occupier — It includes any person for the time being, paying or liable to pay rent or any portion of rent of the building in respect of which the ward is used, or compensation or premium on account of the occupation of such building and also a rent-free tenant, but does not include a lodger, and the words 'occupy' and 'occupation' do not refer to the lodger.

An owner living in or otherwise using his own building shall be deemed to be the occupier thereof.

2.14 Operational Construction/Installation — A construction/installation put up by Government Departments for operational purposes (*see* **12.1.2.1**).

2.15 Owner — A person, a group of persons or a body having a legal interest in land and/or building thereon. This includes freeholders, leaseholders or those holding a sublease, who will have a legal right to occupation and have liabilities in respect of safety or building condition.

In case of lease or sublease holders, as far as ownership with respect to the structure is concerned, the structure of a flat or structure on a plot belongs to the allottee/ lessee till the allotment/lease subsists.

2.16 Permit — A permission or authorization in writing by the Authority to carry out work regulated by the Code.

2.17 Registered Architect, Engineer, Structural Engineer, Geotechnical Engineer, Supervisor, Town Planner, Landscape Architect, Urban Designer — A qualified architect, engineer, structural engineer, geotechnical engineer, supervisor, town planner, landscape architect or urban designer who has been registered by the Authority or by the body governing such profession and constituted under a statute, as may be applicable. The registration requirements of these professionals shall be as given in Annex A.

NOTES

1 Unless specified otherwise, the world 'engineer' shall mean 'civil engineer' or 'architectural engineer'.

2 The word 'licencing/licensed', etc, if used by the Authority in the above context, shall be deemed to mean 'registration/ registered', etc.

2.18 Road — *See* **2.25**.

2.19 Road Line — *See* **2.27**.

2.20 Room Height — The vertical distance measured from the finished floor surface to the finished ceiling surface. Where a finished ceiling is not provided, the underside of the joists or beams or tie beams shall determine the upper point of measurement for determining the head room.

2.21 Sanctioned Plan — The set of plans, specifications and other details submitted in connection with a building or development and duly approved and sanctioned by the Authority.

2.22 Service Road — A road/lane provided at the rear or side of a plot for service purposes.

2.23 Set-Back Line — A line usually parallel to the plot boundaries and laid down in each case by the Authority, beyond which nothing can be constructed towards the site boundaries.

2.24 Site (Plot) — A parcel (piece) of land enclosed by definite boundaries.

2.25 Street — Any means of access, namely, highway, street, lane, pathway, alley, stairway, passageway, carriageway, footway, square, place or bridge, whether a thoroughfare or not, over which the public have a right of passage or access or have passed and had access uninterruptedly for a specified period, whether existing or proposed in any scheme and includes all bunds, channels, ditches, storm-water drains, culverts, sidewalks, traffic islands, roadside trees and hedges, retaining walls, fences, barriers and railings within the street lines.

2.26 Street Level or Grade — The officially established elevation or grade of the centre line of the street upon which a plot fronts and if there is no officially established grade, the existing grade of the street at its mid-point.

2.27 Street Line — The line defining the side limits of a street.

2.28 To Erect — To erect a building means,

a) to erect a new building on any site whether previously built upon or not;

b) to re-erect any building of which portions above the plinth level have been pulled down, burnt or destroyed.

2.29 Unsafe Building — Buildings which are structurally and constructionally unsafe or insanitary or not provided with adequate means of egress or which constitute a fire hazard or are otherwise dangerous to human life or which in relation to existing use constitute a hazard to safety or health or public welfare, by reason of inadequate maintenance, dilapidation or abandonment.

3 APPLICABILITY OF THE CODE

3.1 All Parts of the Code and their Sections shall apply to all buildings described in **3.2** to **3.8**, as may be applicable.

3.2 Where a building is erected, the Code applies to the design and construction of the building.

3.3 Where the whole or any part of the building is removed, the Code applies to all parts of the building whether removed or not.

3.4 Where the whole or any part of the building is demolished the Code applies to any remaining part and to the work involved in demolition.

3.5 Where a building is altered (*see* **12.4** and **12.4.1**), the Code applies to the whole building whether existing or new except that the Code applies only to part, if that part is completely self contained with respect to facilities and safety measures required by the Code.

3.6 Where the occupancy of a building is changed the Code applies to all parts of the building affected by the change.

3.7 Where development of land is undertaken the Code applies to the entire development of land.

3.8 Existing Buildings/Development

Nothing in the Code shall require the removal, alteration or abandonment, nor prevent continuance of the use or occupancy of an existing building/development, unless in the opinion of the Authority, such building/development constitutes a hazard to the safety of the adjacent property or the occupants of the building itself.

4 INTERPRETATION

4.1 The heading which appears at the beginning of a clause or sub-clause of the Code shall be deemed to be a part of such clause or sub-clause, respectively.

4.2 The use of present tense includes the future tense, the masculine gender includes the feminine and the neuter, the singular number includes the plural and the plural includes the singular. The word 'person' includes a corporation as well as an individual; writing includes printing and typing and 'signature' includes thumb impression made by a person who cannot write if his name is written near to such thumb impression.

5 ALTERNATIVE MATERIALS, METHODS OF DESIGN AND CONSTRUCTION, AND TESTS

5.1 The provisions of the Code are not intended to prevent the use of any material or method of design or construction not specifically prescribed by the Code, provided any such alternative has been approved.

5.2 The Authority may approve any such alternative provided it is found that the proposed alternative is satisfactory and conforms to the provisions of relevant parts regarding material, design and construction and that material, method, or work offered is, for the purpose intended, at least equivalent to that prescribed in the Code in quality, strength, compatibility, effectiveness, fire and water resistance, durability and safety.

5.3 Tests

Whenever there is insufficient evidence of compliance with the provisions of the Code or evidence that any material or method of design or construction does not conform to the requirements of the Code or in order to substantiate claims for alternative materials, design or methods of construction not specifically prescribed in the Code, the Authority may require tests sufficiently in advance as proof of compliance. These tests shall be made by an approved agency at the expense of the owner.

5.3.1 Test methods shall be specified by the Code for the materials or design or construction in question. If there are no appropriate test methods specified in the Code, the Authority shall determine the test procedure. For methods of test for building materials, reference may be made to Part 5 'Building Materials' of the Code.

5.3.2 Copies of the results of all such tests shall be retained by the Authority for a period of not less than two years after the acceptance of the alternative material.

SECTION 2 ORGANIZATION AND ENFORCEMENT

6 DEPARTMENT OF BUILDINGS

6.1 The department of buildings shall be created by the Authority and a team of building officials shall be appointed to carry out work of such department.

6.2 Appointment of Team of Building Officials

The team of building officials shall be appointed by the Authority. The team shall comprise officials drawn from concerned disciplines such as engineer, architect, town planner, landscape architect and urban designer as may be decided by the Authority. For scrutiny of layout plans of plots of one hectare and above in metro cities and two hectares and above in other places, town planner shall be part of the team of building officials. For plots of five hectares and above, landscape architect shall also be part of the team. An urban designer shall also be required to be the part of team of building officials for examining proposals on integrated urban design and development for residential/business/institutional and assembly building.

NOTE — Metro cities are cities with population more than 1 000 000.

6.3 Organization

In the department of buildings, such number of officers, technical assistants, inspectors and other employees shall be appointed to assist the team of building officials as shall be necessary for the administration of the Code and as authorized by the Authority.

6.4 Delegation of Powers

The Authority may designate one of the building officials who shall exercise all the powers of the team of building officials. The work of the team of building officials may be outsourced to competent professional/agency/group as may be deemed necessary.

6.5 Qualification of Building Officials

The qualification of building officials scrutinizing the plans and carrying out inspection of buildings shall not

in any case be less than those prescribed in Annex A.

6.5.1 In small local bodies having insufficient resources to appoint such officials with the above qualifications, two or three such bodies contiguously located could join together and share the services of one team of building officials.

6.6 Qualifications of Assistant

No person shall be appointed as assistant unless he has got the qualifications prescribed in Annex A for a registered supervisor.

6.7 Restriction on Employees

No official or employee connected with the department of buildings except one whose only connection is that of a member of the Board of Appeals, established under **8** shall be engaged directly or indirectly in a work connected with the furnishing of labour, materials or appliances for the construction, alteration or maintenance of a building, or the preparation of plans or of specifications thereof unless he is the owner of building; nor shall such official or employee engage in any work which conflicts with his official duties or with the interests of the department.

6.8 Records

Proper records of all applications received, permits and orders issued, inspections made shall be kept and copies of all papers and documents connected with the administration of its duties shall be retained and all such records shall be open to public inspection at all appropriate times.

7 POWER AND DUTIES OF TEAM OF BUILDING OFFICIALS

The team of building officials shall enforce all the provisions of the Code and shall act on any question relative to the mode or manner of construction and the materials to be used in the erection, addition, alteration, repair, removal, demolition, installation of service equipment and the location, use, occupancy and maintenance of all buildings except as may otherwise be specifically provided.

7.1 Application and Permits

The team of building officials shall receive all applications and issue permits (*see* **12.10**) for the erection and alteration of buildings and examine the premises for which such permits have been issued and enforce compliance with the Code.

7.2 Building Notices and Orders

The team of building officials shall issue all necessary notices or orders to remove illegal or unsafe conditions, to require the necessary safeguards during construction, to require adequate exit facilities in existing buildings and to ensure compliance with all the requirements of safety, health and general welfare of the public as included in the Code.

7.3 Right of Entry

Upon presentation of proper credentials and with advance notice, the team of building officials or its duly authorized representative may enter at any reasonable time any building or premises to perform any duty imposed upon him by the Code.

7.4 Inspection

The team of building officials shall make all the required inspections or it may accept reports of inspections of authoritative and recognized services or individuals; and all reports of inspections shall be in writing and certified by a responsible officer of such authoritative service or by the responsible individual or engage any such expert opinion as he may deem necessary to report upon unusual technical issues that may arise, subject to the approval of the Authority.

7.5 Construction Not According to Plan

Should the team of building officials determine at any stage that the construction is not proceeding according to the sanctioned plan or is in violation of any of the provisions of the Code, or any other applicable Code Regulation, Act or Byelaw, it shall notify the owner, and all further construction shall be stayed until correction has been effected and approved.

7.5.1 Should the owner fail to comply with the requirements at any stage of construction, the Authority shall issue a notice to the owner asking explanation for non-compliance. If the owner fails to comply within 14 days from the date of receiving the notice, the Authority shall be empowered to cancel the building permit issued and shall cause notice of such cancellation to be securely pasted upon the said construction, if the owner is not traceable at his address given in the notice. Pasting of such a notice shall be considered sufficient notification of cancellation to the owner thereof. No further work shall be undertaken or permitted upon such construction until a valid building permit thereafter has been issued. If the owner, in violation of the notice for cancellation, continues the construction, the Authority may take all necessary means to stop such work and further appropriate actions including demolitions. The owner shall, however, have right to appeal against cancellation of permit, to the board of appeal, within a stipulated period, as may be decided by the Authority.

7.6 Modification

Wherever practical difficulties are involved in carrying

out any provision of the Code, the team of building officials may vary or modify such provisions upon application of the owner or his representative provided the spirit and intent of the Code shall be observed and public welfare and safety be assured. The application for modification and the final decision of the team of building officials shall be in writing and shall be officially recorded with the application for the permit in the permanent records of the Department of Building Inspection.

7.7 Occupancy Violations

Wherever any building is being used contrary to provisions of the Code, the team of building officials may order such use discontinued and the building or portion thereof, vacated by the notice served on any person, causing such use to be discontinued. Such person shall discontinue the use within 10 days after receipt of such notice or make the building or portion thereof, comply with the requirements of the Code.

8 BOARD OF APPEALS

In order to determine the suitability of alternative materials or methods of design or construction and to provide for reasonable interpretation of the provisions of the Code or in the matter of dispute relating to an ongoing construction *vis-a-vis* the sanctioned plan, a Board of Appeals consisting of members who are qualified by experience and training and to pass judgement upon matters pertaining to building construction, shall be appointed by the Authority. A representative of the team of building officials shall be an *ex-officio* member and shall act as secretary to the Board. The Board shall adopt reasonable rules and regulations for conducting its investigations and shall render all decisions and findings in writing to the team of building officials with a duplicate copy to the appellant and may recommend such modifications as are necessary.

9 VIOLATIONS AND PENALTIES

9.1 Offences and Penalties

9.1.1 Any person who contravenes any of the provisions of the Code or any requirements of obligations imposed on him by virtue of the Code, or who interferes with or obstructs any person in the discharge of his duties, shall be guilty of an offence and the Authority shall levy suitable penalty or take other actions as per the Code (*see also* **7.5** and **15**).

NOTE — The penalty may be in the form of collection of arrears of tax.

9.1.2 The buildings/developments violating any applicable statutory rules shall be demolished/brought within the limits as prescribed in such rules at the expense of the owner. The buildings coming up in the vicinity of an aerodrome in violation of the height restriction laid down by the Directorate General of Civil Aviation shall be accordingly demolished/brought within the limits prescribed by DGCA rules.

9.1.3 The registered architect, engineer, structural engineer, supervisor, town planner, landscape architect, urban designer and utility service engineer (*see* Annex A) responsible for the services rendered for supervision of the construction/development and for the completion certificate; in the event of violation of the provisions of the Code, shall be liable to penalties as prescribed by the Authority including cancellation of registration done by it or make such recommendation to the statutory body governing such profession.

9.2 Further Obligation of Offender

The conviction of any person for an offence under the provision of **9.1** shall not relieve him from the duty of carrying out the requirements or obligations imposed on him by virtue of the provisions of the Code; and if such requirements or obligations are not complied with in accordance with an order made under provisions of **9.1**, the Authority under the provisions of the Code may, if necessary and advisable, enter upon the premises in respect of which a conviction has been made and carry out at the expense of the convicted person, the requirements or obligations referred to in the said order and the expense, if not paid on demand, may be recovered with cost in a court.

9.3 Conviction No Bar to Further Prosecution

The conviction of any person under the provisions of this part for failing to comply with any of the said requirements or obligations shall not operate as a bar to further prosecution under this part for any subsequent failure on the part of such person to comply.

10 POWER TO MAKE RULES

The Authority may make rules for carrying out the provisions and intentions of the Code provided that any rule shall not be in direct/indirect conflict or nullify/dilute any of the provisions of the Code.

SECTION 3 PERMIT AND INSPECTION

11 DEVELOPMENT/BUILDING PERMIT

11.1 Permit Required

11.1.1 No person shall carry out any development, erect, re-erect or make alterations or demolish any building or cause the same to be done without first obtaining a separate permit for each such development/building from the Authority. No permit shall, however, be required for works referred to in **12.1.2.1** and **12.4.1**.

11.1.2 The development/building permit shall take into cognizance the provisions under the relevant Town Planning Act/Development Act/Municipal Act/any other applicable statutes for layout, building plans, water supply, sewerage, drainage, electrification, etc, as provided in the said Act/statute. Also, if so directed by the Authority, the permit shall take care of the need for landscape development plan in the layout and building plans.

11.1.3 Specific approvals shall be obtained from Airports Authority of India, Ministry of Environment, Forest and Climate Change, Fire Services Department, Pollution Control Board, designated authorities under Factories Act/Cinema Regulation Act, Urban Arts Commission, designated Coastal Regulation Zone Authority, Archaeological Survey of India, Heritage Committee and any such other authority as may be applicable. Approval of Fire Services Department shall be required for buildings of height 15 m or above and for such other buildings/special buildings referred to in Part 4 'Fire and Life Safety' of the Code.

11.1.4 *Integrated Approval Process*

11.1.4.1 In order to facilitate ease of doing business and ensure efficient and expeditious clearance from above bodies with the concept of single window clearance approach and thereby final approval by the Authority within the stipulated time frame, the Authority may constitute a Development/Building Permit Approval Committee consisting of representatives of the team of building officials, representatives of all bodies/organizations from whom clearance for development/building permit clearance is required.

Recommendations from such Committee shall be summarily utilized by the team of building officials in sanctioning process. The Committee may meet once in 15/30 days depending upon the work load. The first response/invalid notice/non-compliance intimation shall be issued by the Authority to the owner within 30 days of submission of the plans to the Authority (*see also* **12.10.2**).

11.1.4.2 It would be more appropriate that all the above authorities may make the information available in public domain delineating clearly the situations requiring their clearance. This information being available to the Authority as well, should be utilized by the Authority in deciding on the required sanction or otherwise without the need to go to the above multiple authorities. This can be achieved by providing, for necessary reference of the Authority, simplified environmental guidelines by the Ministry of Environment, Forest and Climate Change; colour coded zoning maps for Airports depicting restrictions imposed near airports, by Airports Authority of India; information on categorization of monuments with concerned degree of restrictions, by National Monuments Authority; etc.

The above could be further facilitated, if such requirements in respect of clearances from all such authorities be integrated in the Development Control Rules of the Master/Development Plan of the concerned city/town. The areas unaffected by any of the restrictions should be clearly marked out and mapped, preferably on a GIS platform. Area zones of differential control regulations (within the city) by any of these authorities may also be mapped accordingly so as to result in a composite map of the city/town with various control regulations by different authorities, clearly marked on the map. The sites which are located outside the restricted/regulated areas would not require availing clearance from the respective authorities.

Such integrated approval by the Authority shall be accorded within the time limit of 30 days (*see also* **12.10.2**).

11.1.5 The Authority shall permit a registered architect/engineer to approve the building proposals including plans, and certify completion of building for issue of related regulatory building permits and occupancy certificate for residential buildings designed by self or otherwise, on plot size up to 500 m^2. The responsibility of compliance with respect to provisions of Code shall rest with the registered architect/engineer. However, the plans shall be required to be submitted to the Authority for information and records.

NOTE — Where the experience clearly shows that satisfactory building permit activities are being carried out through the above empowerment of professionals, the Authority may extend such provision for larger areas and other building occupancies.

11.2 Pre-Code Development/Building Permit

If any development/building, permit for which had been issued before the commencement of the Code, is not wholly completed within a period of three years from the date of such permit, the said permission shall be deemed to have lapsed and fresh permit shall be necessary to proceed further with the work in accordance with the provisions of the Code.

12 APPLICATION FOR DEVELOPMENT/ BUILDING PERMIT

12.1 Application

Every owner who intends to develop, erect, re-erect or make alterations in any place in a building shall give an application in writing to the Authority of his said intention in the prescribed form (*see* Annex B) and such notice shall be accompanied by plans and statements in triplicate as required under **12.2** and **12.3** except for special buildings (high rise, non-residential) where

additional copies may be submitted as desired by the Authority. The Authority shall permit submission of plans/documents in electronic form.

12.1.1 *Computerization of Approval Process*

The Authority should progressively computerize the approval process. This may involve facilitating submission of building plans and other documents and requisite fee online by uploading the same through the designated portal of the Authority as well as sanction online. It may also require instituting appropriate procedure for registration and traceability along with responsibility of the applicant making such submissions.

12.1.2 Regarding submission of plans by Government Departments, the procedure shall be as given in **12.1.2.1** and **12.1.2.2**.

12.1.2.1 The operational construction/installation of the Government, whether temporary or permanent, which is essential for the operation, maintenance, development or execution of any of the following services may be exempted from the point of view of the byelaws:

a) Railways;
b) National highways;
c) National waterways;
d) Major ports;
e) Airways and aerodromes;
f) Posts and telegraphs, telephones, wireless, broadcasting, and other like forms of communications;
g) Regional grid for electricity;
h) Defence; and
j) Any other service which the Central/State Government may, if it is of opinion that the operation, maintenance, development of execution of such service is essential to the life of the community, by notification, declare to be a service for the purpose of this clause.

In case of construction/installation where no approvals are required, the concerned agencies which are exempted from seeking approval shall submit the drawings/plans/details for information and records of the Authority before construction/installation. The provisions of the Code, as applicable, shall however be followed for all such developments.

12.1.2.2 However, the following construction of the Government departments do not come under the purview of operational construction for the purpose of exemption under **12.1.2.1**:

a) New residential building (other than gate lodges, quarters for limited essential operational staff and the like), roads and drains in railway colonies, hospitals, clubs, institutes and schools, in the case of railways; and
b) A new building, new construction or new installation or any extension thereof in the case of any other services.

12.2 Information Accompanying Notice

The notice shall be accompanied by the key plan, site plan, building plan, services plans, specifications, structural sufficiency certificate and certificate of supervision as prescribed in **12.2.2** to **12.2.8**.

12.2.1 *Sizes of Drawing Sheets and Recommended Notation for Colouring Plans*

12.2.1.1 The size of drawing sheets shall be any of those specified in Table 1.

Table 1 Drawing Sheet Sizes
(*Clause* 12.2.1.1)

Sl No. (1)	Designation (2)	Trimmed Size mm (3)
i)	A0	841 × 1189
ii)	A1	594 × 841
iii)	A2	420 × 594
iv)	A3	297 × 420
v)	A4	210 × 297
vi)	A5	148 × 210

12.2.1.2 The plans shall be coloured as specified in Table 2.

12.2.2 *Key Plan*

A key plan drawn to a scale of not less than 1 : 10 000 shall be submitted along with the application for a development/building permit showing the boundary locations of the site with respect to neighbourhood landmarks. The minimum dimension of the key plan shall be not less than 75 mm.

12.2.3 *Site Plan*

The site plan sent with an application for permit shall be drawn to a scale of not less than 1 : 500 for a site up to one hectare and not less than 1 : 1 000 for a site more than one hectare and shall show,

a) the boundaries of the site and of any contiguous land belonging to the owner thereof;
b) the position of the site in relation to neighbouring street;
c) the name of the streets in which the building is proposed to be situated, if any;
d) all existing buildings standing on, over or under the site including service lines;
e) the position of the building and of all other

Table 2 Colouring of Plans
(*Clause* 12.2.1.2)

Sl No.	Item	Site Plan			Building Plan		
		White Plan	Blue Print	Ammonia Print	White Plan	Blue Print	Ammonia Print
(1)	(2)	(3)	(4)	(5)	(6)	(7)	(8)
i)	Plot lines	Thick black	Thick black	Thick black	Thick black	Thick black	Thick black
ii)	Existing street	Green	Green	Green	—	—	—
iii)	Future street, if any	Green dotted	Green dotted	Green dotted	—	—	—
iv)	Permissible building lines	Thick dotted black	Thick dotted black	Thick dotted black	—	—	—
v)	Open spaces	No colour	No colour	No colour	No colour	No colour	No colour
vi)	Existing work	Black (outline)	White	Blue	Black	White	Blue
vii)	Work proposed to be demolished	Yellow hatched	Yellow hatched	Yellow hatched	Yellow hatched	Yellow hatched	Yellow hatched
viii)	Proposed work (*see* Note 1)	Red filled in	Red	Red	Red	Red	Red
ix)	Drainage and sewerage work	Red dotted	Red dotted	Red dotted	Red dotted	Red dotted	Red dotted
x)	Water supply work	Black dotted thin	Black dotted thin	Black dotted thin	Black dotted thin	Black dotted thin	Black dotted thin

NOTES
1 For entirely new construction this need not be done; for extension of an existing work this shall apply.
2 For land development, subdivision, layout, suitable colouring notations shall be used which shall be indexed.

buildings (if any) which the applicant intends to erect upon his contiguous land referred to in (a) in relation to:

1) the boundaries of the site and in case where the site has been partitioned, the boundaries of the portion owned by the applicant and also of the portions owned by others;

2) all adjacent street, buildings (with number of storeys and height) and premises within a distance of 12 m of the site and of the contiguous land (if any) referred to in (a); and

3) if there is no street within a distance of 12 m of the site, the nearest existing street;

f) the means of access from the street to the building, and to all other buildings (if any) which the applicant intends to erect upon his contiguous land referred to in (a);

g) space to be left about the building to secure a free circulation of air, admission of light and access for scavenging purposes;

h) the width of the street (if any) in front and of the street (if any) at the side or near the buildings;

j) the direction of north point relative to the plan of the buildings;

k) any physical features, such as wells, drains, etc; and

m) such other particulars as may be prescribed by the Authority.

12.2.4 *Subdivision/Layout Plan*

In the case of development work, the notice shall be accompanied by the subdivision/layout plan which shall be drawn on a scale of not less than 1 : 500 containing the following:

a) Scale used and north point;

b) Location of all proposed and existing roads with their existing/proposed/prescribed widths within the land;

c) Dimensions of plot along with building lines showing the setbacks with dimensions within each plot;

d) Location of drains, sewers, public facilities and services, and electrical lines, etc;

e) Table indicating size, area and use of all the plots in the subdivision/layout plan;

f) A statement indicating the total area of the site, area utilized under roads, open spaces for parks, playgrounds, recreation spaces and development plan reservations, schools, shopping and other public places along with their percentage with reference to the total area of the site proposed to be subdivided; and

g) In case of plots which are subdivided in built-up areas in addition to the above, the means of access to the subdivision from existing streets.

12.2.5 *Building Plan and Details*

The plan of the buildings and elevations and sections accompanying the notice shall be drawn to a scale of 1 : 100. The plans and details shall,

a) include floor plans of all floors together with the covered area clearly indicating the size and spacings of all framing members and sizes of rooms and the position of staircases, ramps and liftwells;

b) show the use or occupancy of all parts of the buildings;

c) show exact location of essential services, for example, WC, sink, bath and the like;

d) include at least one elevation from the front showing height of building and rooms and also the height of parapet.

e) include at least one section through the staircase.

f) include the structural arrangements with appropriate sections showing type/ arrangement of footings, foundations, basement walls; structural load bearing walls, columns and beams, and shear walls; and arrangement/spacing of framing members, floor slabs and roof slabs with the material used for the same.

g) show all street elevations;

h) give dimensions of the projected portions beyond the permissible building line;

j) include terrace plan indicating the drainage and the slope of the roof; and

k) give indications of the north point relative to the plan.

NOTE — The requirement of 1 : 100 is permitted to be flexible for specific details needed for further illustration; and also for drawings for these in electronic form.

12.2.5.1 *Building plan for high rise/special buildings*

For all high rise buildings which are 15 m or more in height and for special buildings like educational, assembly, institutional, business, mercantile, industrial, storage and hazardous and mixed occupancies with any of the aforesaid occupancies having covered area more than 500 m^2 (*see also* Part 4 'Fire and Lift Safety' of the Code), the building sanction shall be done in two stages. In case of important projects and projects having high complexity and sensitivity, the Authority may get the design, drawings and details of such buildings peer reviewed/proof checked before approving the same.

Stage 1 : Planning clearance

The following additional information shall be furnished/ indicated in the building plan in addition to the items given in **12.2.5** as applicable:

a) Access to fire appliances/vehicles with details of vehicular turning circle and clear motorable accessway around the building;

b) Size (width) of main and alternative staircases along with balcony approach, corridor, ventilated lobby approach;

c) Location and details of lift enclosures;

d) Location and size of fire lift;

e) Smoke stop lobby/door, where provided;

f) Refuse chutes, refuse chamber, service duct, etc;

g) Vehicular parking spaces;

h) Refuge area, if any;

j) *Details of building services* — Air conditioning system with position of fire dampers, mechanical ventilation system, electrical services, boilers, gas pipes, etc;

k) Details of exits including provision of ramps, etc, for hospitals and special risks;

m) Location of generator, transformer and switchgear room;

n) Smoke exhauster system, if any;

p) Details of fire alarm system network;

q) Location of centralized control, connecting all fire alarm systems, built-in-fire protection arrangements and public address system, etc;

r) Location and dimensions of static water storage tank and pump room along with fire service inlets for mobile pump and water storage tank;

s) Location and details of fixed fire protection installations such as sprinklers, wet risers, hose-reels, drenchers, etc; and

t) Location and details of first-aid firefighting equipment/installations.

u) Features relating to accessibility for the elderly and persons with disabilities, shall be in accordance with **13** of Part 3 'Development Control Rules and General Building Requirements' of the Code for the designated buildings and areas.

Stage 2 : Building permit clearance

After obtaining the sanction for planning (Stage 1) from the Authority, a complete set of structural plans, sections, details, design calculations duly signed by engineer/structural engineer (*see* Annex A) along with the complete set of details duly approved in Stage 1 and certificate of completed structural design work (*see* Annex J) shall be submitted. A copy of the subsurface investigation report prepared and duly signed by the geotechnical engineer shall also be submitted. The building plans/details shall be deemed sanctioned for the commencement of construction only after obtaining

the permit for Stage 2 from the Authority.

12.2.6 *Services Plans*

The services plans shall include all details of building and plumbing services, and also plans, elevations and sections of private water supply, sewage disposal system and rainwater harvesting system, if any (*see* Part 8 'Building Services' and Part 9 'Plumbing Services' of the Code).

12.2.7 *Specifications*

Specifications, both general and detailed, giving type and grade of materials to be used, duly signed by the registered architect, engineer, structural engineer or supervisor shall accompany the application (*see* Annex B).

12.2.8 *Structural Design Sufficiency Certificate*

The application shall be accompanied by structural sufficiency certificate in the prescribed form (*see* Annex C) signed by the engineer/structural engineer (*see* Annex A) and the owner jointly to the effect that the building is safe against various loads, forces and effects including due to natural disasters such as earthquakes, landslides, cyclones, floods, etc as per National Building Code of India and its Part 6 'Structural Design' and other relevant Codes. The engineer/structural engineer shall also have the details to substantiate his design.

12.2.9 *Execution and Supervision*

The notice shall be further accompanied by a certificate in the prescribed form (*see* Annex D) by a builder/ constructor (*see* Annex A) undertaking the execution.

The notice shall also be accompanied by a certificate in the prescribed form (*see* Annex E) by the registered architect/engineer/structural engineer/supervisor/town planner (*see* Annex A) undertaking the supervision (*see* **9.1.3**).

12.3 Preparation and Signing of Plans

The registered architect/engineer/supervisor/town planner/landscape architect/urban designer/utility service engineer shall prepare and duly sign the plans as per their competence (*see* Annex A) and shall indicate his/her name, address, qualification and registration number as allotted by the Authority or the body governing such profession. The structural plans and details shall also be prepared and duly signed by the competent professionals like registered engineer/ structural engineer (*see* Annex A). The plans shall also be duly signed by the owner indicating his address. The type and volume of buildings/development work to be undertaken by the registered professionals may generally be as in Annex A.

12.4 Notice for Alteration Only

When the notice is only for an alteration of the building (*see* **3.5**), only such plans and statements, as may be necessary, shall accompany the notice.

12.4.1 No notice and building permit is necessary for the following alterations, and the like which do not otherwise violate any provisions regarding general building requirements, structural stability and fire and health safety requirements of the Code:

a) Opening and closing of a window or door or ventilator;
b) Providing intercommunication doors;
c) Providing partitions;
d) Providing false ceiling;
e) Gardening;
f) White washing;
g) Painting;
h) Re-tiling and re-roofing;
j) Plastering and patch work;
k) Re-flooring; and
m) Construction of sunshades on one's own land.

12.5 Fees

No notice as referred to in **12.1** shall be deemed valid unless and until the person giving notice has paid the fees to the Authority and an attested copy of the receipt of such payment is attached with the notice.

NOTE — The fees may be charged as a consolidated fee. In the event of a building/development permit is not issued, the fees so paid shall not be returned to the owner, but he shall be allowed to re-submit it without any fees after complying with all the objections raised by the Authority within a period of one year from the date of rejection after which fresh fees shall have to be paid.

12.6 Duration of Sanction

The sanction once accorded shall remain valid up to three years. The permit shall be got revalidated before the expiration of this period. Revalidation shall be subject to the rules then in force.

12.7 Deviations During Construction

If during the construction of a building any departure (excepting for items as given in **12.4.1**) from the sanctioned plan is intended to be made (*see* **7.5**), sanction of the Authority shall be obtained before the change is made. The revised plan showing the deviations shall be submitted and the procedure laid down for the original plan heretofore shall apply to all such amended plans except that the time limit specified under **12.10.2** shall be three weeks in such cases.

12.8 Revocation of Permit

The Authority may revoke any permit issued under the

provisions of the Code, wherever there has been any false statement, misrepresentation of any material fact in the application on which the permit was based or violation of building permit or in case of noncompliance thereof, and shall state the reasons for revoking the permit.

12.9 Qualification of Architects, Engineers, Structural Engineers, Geotechnical Engineers, Supervisors, Town Planners, Landscape Architects, Urban Designers, Services Personnel and Builder/ Constructor

Architects, engineers, structural engineers, geotechnical engineers, supervisors, town planners, landscape architect, urban designer, utility service engineer and builder/constructor wherever referred in the Code, shall be registered by the Authority or the body governing such profession constituted under a statute, as competent to do the work for which they are employed. A guide for the equivalent technical qualifications and professional experience required for such registration with the Authority is given in Annex A. In case of building and plumbing services, qualifications for engineers for utility services shall be as given in **A-2.9**.

12.9.1 In case the registered professional associated with the preparation and signing of plans or for supervision, is being changed during any stage of building/land development process, the professional shall intimate the Authority in writing about the further non-association with the project.

12.10 Grant of Sanction or Refusal

The Authority may either sanction or refuse the plans and specifications or may sanction them with such modifications or directions as it may deem necessary and thereupon shall communicate its decision to the person giving the notice (*see* Annex F).

12.10.1 The building plans for buildings identified in **12.2.5.1** shall also be subject to the scrutiny of the Fire Authority and the sanction through building permit shall be given by the Authority after the clearance from the Fire Authority (*see also* **11.1.3**).

12.10.2 If within 30 days of the receipt of the notice under **12.1** of the Code, the Authority fails to intimate in writing to the person, who has given the notice, of its refusal or sanction, the notice with its plans and statements shall be deemed to have been sanctioned; provided the fact is immediately brought to the notice of the Authority in writing by the person who has given notice and having not received any intimation from the Authority within fifteen days of giving such written notice. Subject to the conditions mentioned in this clause, nothing shall be construed to authorize any person to do anything in contravention of or against the terms of lease or titles of the land or against any other regulations, byelaws or ordinance operating on the site of the work.

12.10.3 In the case of refusal, the Authority shall quote the reason and relevant sections of the Code which the plans contravene. The Authority shall as far as possible advise all the objections to the plans and specifications in the first instance itself and ensure that no new objections are raised when they are resubmitted after compliance of earlier objections.

12.10.4 Once the plan has been scrutinized and objections have been pointed out, the owner giving notice shall modify the plan to comply with the objections raised and resubmit it. The Authority shall scrutinize the re-submitted plan and if there be further objections, the plan shall be rejected.

13 RESPONSIBILITIES AND DUTIES OF THE OWNER

13.1 Neither the granting of the permit nor the approval of the drawings and specifications, nor inspections made by the Authority during erection of the building shall in any way relieve the owner of such building from full responsibility for carrying out the work in accordance with the requirements of the Code (*see* **9**).

13.2 Every owner shall,

a) permit the Authority to enter the building or premises for which the permit has been granted at any reasonable time for the purpose of enforcing the Code;

b) submit a document of ownership of the site;

c) obtain, where applicable, from the Authority, permits relating to building, zoning, grades, sewers, water mains, plumbing, signs, blasting, street occupancy, electricity, highways, and all other permits required in connection with the proposed work;

d) give notice to the Authority of the intention to start work on the building site (*see* Annex G);

e) give written notice to the Authority intimating completion of work up to plinth level;

f) submit the certificate of engagement of builder/constructor(s) for the buildings given in **12.2.5.1** (*see* Annex D), certificate for sub-surface investigation, where applicable (*see* Note 1) (*see* Annex H), certificate for completed structural design work as per structural safety requirements (*see* Annex J); certificate for supervision and execution of work (*see* Annex K); certificate for completed work by builder/constructor(s) (*see* Annex M) (*see* Note); and give written notice to the

Authority regarding completion of work described in the permit (*see* Annex N);

NOTE — *See* **3.1** and **3.1.1** of Part 6 'Structural Design, Section 2 Soils and Foundations' of the Code.

g) give written notice to the Authority in case of termination of services of a professional engaged by him; and

h) obtain an occupancy permit (*see* Annex P) from the Authority prior to any,

   1) occupancy of the building or part thereof after construction or alteration of that building or part, or

   2) change in the class of occupancy of any building or part thereof.

13.2.1 *Temporary Occupancy*

Upon the request of the holder of the permit, the Authority may issue a temporary certificate of occupancy for a building or part thereof, before the entire work covered by permit shall have been completed, provided such portion or portions may be occupied safely prior to full completion of building without endangering life or public welfare.

13.3 Documents at Site

13.3.1 Where tests of any materials are made to ensure conformity with the requirements of the Code, records of the test data shall be kept available for inspection during the construction of the building and for such a period thereafter as required by the Authority.

13.3.2 The person to whom a permit is issued shall during construction keep pasted in a conspicuous place on the property in respect of which the permit was issued,

a) a copy of the building permit; and

b) a copy of the approved drawings and specifications referred in **12**.

14 INSPECTION, OCCUPANCY PERMIT AND POST-OCCUPANCY INSPECTION

14.1 Generally all construction or work for which a permit is required shall be subject to inspection by the Authority and certain types of construction involving unusual hazards or requiring constant inspection shall have continuous inspection by special inspectors appointed by the Authority.

14.2 Inspection, where required, shall be made within 7 days following the receipt of notification, after which period the owner will be free to continue the construction according to the sanctioned plan. At the first inspection, the Authority shall determine to the best of its ability that the building has been located in accordance with the approved site plans. The final inspection of the completion of the work shall be made within 21 days following the receipt of notification [*see* **13.2**(f)] for the grant of occupancy certificate.

14.2.1 The owner/concerned registered architect/engineer/structural engineer/town planner will serve a notice/completion certificate to the Authority that the building has been completed in all respects as per the approved plans. The deviations shall also be brought to the notice of the Authority (with relevant documents). The team of building officials or its duly authorized representative shall then visit the site and occupancy certificate shall be given in one instance.

14.2.2 The occupancy certificate should clearly state the use/type of occupancy of the building. However, the applicant can apply for change of use/occupancy permitted within the purview of the Master Plan/Zonal Plan/Building Bye laws, where so required.

14.3 When inspection of any construction operation reveals that any lack of safety precautions exist, the Authority shall have right to direct the owner to stop the work immediately until the necessary remedial measures to remove the violation of safety precautions are taken.

14.4 Periodic Occupancy Renewal

14.4.1 For buildings covered in **12.2.5.1**, after completion of the building and obtaining the occupancy certificate, periodic inspections of building shall be made by the Fire Authority to ensure the fire safety of the building and compliance with the provisions of fire and life safety requirements (*see* Part 4 'Fire and Life Safety' of the Code). Periodic occupancy renewal certificate shall be made available by the Authority/Fire Authority which shall also include safe keep of firefighting installations and equipment for such buildings.

14.4.2 All buildings covered under **12.2.5.1** shall be subjected to periodic physical inspection by a team of multi-disciplinary professionals of local Authority. The work by team of professionals may be outsourced by the authority to competent professionals as may be deemed necessary. The team shall ensure the compliance of byelaws, natural lighting, ventilation, etc besides structural safety, electrical safety and accessibility (for designated public buildings and areas as per **13** of Part 3 'Development Control Rules and General Building Requirements' of the Code). After checking, the team shall be required to give the certificate for above aspects. If any shortcoming/deficiencies or violations are noticed during inspection, the Authority shall ensure the compliance of these within a specified time frame of six months. If not complied with, the building shall be declared unsafe/unfit. The period of inspection shall usually be 3 to 5 years but in any case not more than 5 years.

15 UNSAFE BUILDING

15.1 All unsafe buildings shall be considered to constitute danger to public safety and shall be restored by repairs or demolished or dealt with as otherwise directed by the Authority (*see* **15.2** to **15.5**).

15.2 Examination of Unsafe Building

The Authority shall examine or cause to be examined every building reported to be unsafe or damaged, and shall make a written record of such examination.

15.3 Notice to Owner, Occupier

Whenever the Authority finds any building or portion thereof to be unsafe, it shall, in accordance with established procedure for legal notice, give to the owner and occupier of such building written notices stating the defects thereof. This notice shall require the owner or the occupier within a stated time either to complete specified repairs or improvements or to demolish and remove the building or portion thereof.

15.3.1 The Authority may direct in writing that the building which in his opinion is dangerous, or has no provision for exit if caught fire, shall be vacated immediately or within the period specified for the purpose; provided that the Authority concerned shall keep a record of the reasons for such action with him.

If any person does not comply with the orders of vacating a building, the Authority may direct the police to remove the person from the building and the police shall comply with the orders.

15.4 Disregard of Notice

In case the owner or occupier fails, neglects, or refuses to comply with the notice to repair or to demolish the said building or portion thereof, the Authority shall cause the danger to be removed whether by demolition or repair of the building or portion thereof or otherwise.

15.5 Cases of Emergency

In case of emergency, which, in the opinion of the Authority involves imminent danger to human life or health, the decision of the Authority shall be final. The Authority shall forthwith or with such notice as may be possible promptly cause such building or portion thereof to be rendered safe by retrofitting/strengthening to the same degree of safety or removed. For this purpose, the Authority may at once enter such structure or land on which it stands, or abutting land or structure, with such assistance and at such cost as may be deemed necessary. The Authority may also get the adjacent structures vacated and protect the public by an appropriate fence or such other means as may be necessary.

15.6 Costs

Costs incurred under **15.4** and **15.5** shall be charged to the owner of the premises involved. Such costs shall be charged on the premises in respect of which or for the benefit of which the same have been incurred and shall be recoverable as provided under the laws (*see* Note).

NOTE — The costs may be in the form of arrears of taxes.

16 DEMOLITION OF BUILDING

Before a building is demolished, the owner shall notify all utilities having service connections within the building, such as water, electric, gas, sewer and other connections. A permit to demolish a building shall not be issued until a release is obtained from the utilities stating that their respective service connections and appurtenant equipment, such as meters and regulators have been removed or sealed and plugged in a safe manner.

17 VALIDITY

17.1 Partial Invalidity

In the event any part or provision of the Code is held to be illegal or void, this shall not have the effect of making void or illegal any of the other parts or provisions thereof, which may or shall be determined to be legal, and it shall be presumed that the Code would have been passed without such illegal or invalid parts or provisions.

17.2 Segregation of Invalid Provisions

Any invalid part of the Code shall be segregated from the remainder of the Code by the court holding such part invalid, and the remainder shall remain effective.

17.3 Decisions Involving Existing Buildings

The invalidity of any provision in any clause of the Code as applied to existing buildings and structures shall not be held to effect the validity of such section in its application to buildings hereafter erected.

18 ARCHITECTURAL CONTROL

18.1 Compliance with the provisions of the Code is adequate for normal buildings. But for major public building complexes or buildings coming up in an important area near historic/monumental buildings and areas of heritage, the aesthetics of the whole scheme may also have to be examined, *vis-a-vis* existing structures. In addition, any development which may mar the general characteristics and environment of historical, architectural or other monuments should also be subject to the provisions of this clause. This clause is intended to cover very few structures to come up in

the vicinity of other declared/historically important structures, and the scrutiny shall be limited to the external architectural features only so as to ensure an aesthetic continuance of the existing structures with the new. The scrutiny shall not deal with the routine building plan scrutiny from other requirements of Code from the point of view of structural safety and functional requirements.

18.2 An Urban Arts Commission shall be established at the city/state level on issues related to urban aesthetics, through a statute. This statutory authority/ commission established by an Act of State Legislative Assembly, shall accord approval to all major buildings/ important development projects having bearing on the urban aesthetics, depending upon the importance of the area with respect to natural or built heritage or projects on plot areas above 1 ha and located in specifically identified areas. The Urban Arts Commission shall act as guardian of urban architecture; mainly with regard to building form and envelope, the relationship between the building, and the ambient environment *vis-a-vis* other dependents should be seen in depth.

18.3 The Commission may work in the following manner:

a) The Commission may select only the important buildings as in **18.1** and examine the same. The person responsible for the schemes, say an architect or an engineer, may examine either alone or with the owner. A study of the plans, elevations, models, etc, should be made. The architect/engineer should explain in general terms the purposes which the building is to serve and the main conditions which have influenced him in preparing the design.

b) The Commission after full discussion, may communicate their decision in writing to the parties concerned. The Commission may recommend a change in the whole scheme or suggest modifications in the existing scheme, if so required.

18.4 The Urban Arts Commission should also be charged with advising the city government, on schemes which will beautify the city and add to its cultural vitality.

ANNEX A

[*Foreword and Clauses* 2.17, 6.5, 6.6, 9.1.3, 12.2.5.1, 12.2.8, 12.2.9, 12.3 *and* 12.9]

GUIDE FOR THE QUALIFICATIONS AND COMPETENCE OF PROFESSIONALS

A-1 ESSENTIAL REQUIREMENTS

Every building/development work for which permission is sought under the Code shall be planned, designed and supervised by registered professionals. The registered professionals for carrying out the various activities shall be: (a) Architect, (b) Engineer, (c) Structural engineer, (d) Geotechnical engineer, (e) Supervisor, (f) Town planner, (g) Landscape architect, (h) Urban designer, and (j) Utility service engineer. Requirements of registration for various professionals by the Authority or by the body governing such profession and constituted under a statute, as applicable to practice within the local body's jurisdiction, are given in **A-2.1** to **A-2.8**. The competence of such registered personnel to carry out various activities is also indicated in **A-2.1.1** to **A-2.8.1**.

The qualification and competence of the engineers for utility services and of builder/constructor shall be as prescribed in **A-2.9** and **A-2.10**, respectively.

A-2 REQUIREMENTS FOR REGISTRATION AND COMPETENCE OF PROFESSIONALS

A-2.1 Architect

The minimum qualifications for an architect shall be the qualifications as provided for in the *Architects Act*, 1972 for registration with the Council of Architecture.

A-2.1.1 *Competence*

The registered architect shall be competent to carryout the work related to the building/development permit as given below:

a) Preparation of all plans and information connected with building permit except engineering services of high rise/special

buildings given in **12.2.5.1**.

b) Issuing certificate of supervision and completion of all buildings pertaining to architectural aspects.

c) Preparation of subdivision/layout plans and related information connected with development permit of area up to 1 hectare for metro-cities, and 2 hectare for other places.

d) Issuing certificate of supervision for development of land of area up to 1 hectare for metro-cities, and 2 hectare for other places.

A-2.2 Engineer

The minimum qualifications for an engineer shall be graduate in civil engineering/architectural engineering of recognized Indian or foreign university, or the Corporate Member of Civil Engineering Division/ Architectural Engineering Division of the Institution of Engineers (India) or the Member of the statutory body governing such profession, as and when established.

A-2.2.1 *Competence*

The registered engineer shall be competent to carryout the work related to the building/development permit as given below:

a) Preparation of all plans and information connected with building permit.

b) Structural details and calculations of buildings including subsurface investigation on plot up to 500 m^2 and up to 5 storeys or 16 m in height.

c) Issuing certificate of supervision and completion for all buildings.

d) Preparation of subdivision/layout plans and related information connected with development permit of area up to 1 hectare for metro-cities, and 2 hectare for other places.

e) Preparation of all service plans and related information connected with development permit.

f) Issuing certificate of supervision for development of land for all area.

A-2.3 Structural Engineer

The minimum qualifications for a structural engineer shall be graduate in civil engineering of recognized Indian or foreign university, or Corporate Member of Civil Engineering Division of Institution of Engineers (India), and with minimum 3 years experience in structural engineering practice with designing and field work.

NOTE — The 3 years experience shall be relaxed to 2 years in the case of post graduate degree of recognized Indian or foreign university in the branch of structural engineering. In case of doctorate in structural engineering, the experience required would be one year.

A-2.3.1 *Competence*

The registered structural engineer shall be competent to prepare the structural design, calculations and details for all buildings and carry out supervision.

A-2.3.1.1 In case of buildings having special structural features, as decided by the Authority, which are within the horizontal areas and vertical limits specified in **A-2.2.1**(b) and **A-2.5.1**(a) shall be designed only by structural engineers.

A-2.4 Geotechnical Engineer

The minimum qualifications for a geotechnical engineer shall be graduate in civil engineering of recognized Indian or foreign university, or Corporate Member of Civil Engineering Division of Institution of Engineers (India), and with minimum 3 years experience in geotechnical engineering practice with designing and field work.

NOTE — The 3 years experience shall be relaxed to 2 years in the case of post graduate degree of recognized Indian or foreign university in the branch of geotechnical engineering. In case of doctorate in geotechnical engineering, the experience required would be one year.

A-2.4.1 *Competence*

The registered geotechnical engineer shall be competent to carry out subsurface investigations and give report thereof. These may *inter-alia* include performing various tests required to determine engineering properties of sub-strata and ground water and making recommendations about the type of foundation, soil bearing capacity and the depth at which the foundations shall be placed, considering the structural system and loads supplied by the engineer/structural engineer.

A-2.5 Supervisor

The minimum qualifications for a supervisor shall be diploma in civil engineering or architectural assistantship, or the qualification in architecture or engineering equivalent to the minimum qualification prescribed for recruitment to non-gazetted service by the Government of India plus 5 years experience in building design, construction and supervision.

A-2.5.1 *Competence*

The registered supervisor shall be competent to carryout the work related to the building permit as given below:

a) All plans and related information connected with building permit for residential buildings on plot up to 200 m^2 and up to two storeys or 7.5 m in height; and

b) Issuing certificate of supervision for buildings as per (a).

A-2.6 Town Planner

The minimum qualification for a town planner shall be the Associate Membership of the Institute of Town Planners or graduate or post-graduate degree in town and country planning.

A-2.6.1 *Competence*

The registered town planner shall be competent to carryout the work related to the development permit as given below:

a) Preparation of plans for land subdivision/ layout and related information connected with development permit for all areas.
b) Issuing of certificate of supervision for development of land of all areas.

NOTE — However, for land layouts for development permit above 5 hectare in area, landscape architect shall also be associated, and for land development infrastructural services for roads, water supplies, sewerage/drainage, electrification, etc, the registered engineers for utility services shall be associated.

A-2.7 Landscape Architect

The minimum qualification for a landscape architect shall be the bachelor, master's degree in landscape architecture or equivalent from recognized Indian or foreign university.

A-2.7.1 *Competence*

The registered landscape architect shall be competent to carryout the work related to landscape design for building/development permit for land areas 5 hectare and above. In case of metro-cities, this limit of land area shall be 2 hectare and above.

NOTE — For smaller areas below the limits indicated above, association of landscape architect may also be considered from the point of view of desired landscape development.

A-2.8 Urban Designer

The minimum qualification for an urban designer shall be the master's degree in urban design or equivalent from recognized Indian or foreign university.

A-2.8.1 *Competence*

The registered urban designer shall be competent to carryout the work related to the building permit for urban design for land areas more than 5 hectare and campus area more than 2 hectare. He/she shall also be competent to carryout the work of urban renewal for all areas.

NOTE — For smaller areas below the limits indicated above, association of urban designer may be considered from the point of view of desired urban design.

A-2.9 Engineers for Utility Services

For buildings identified in **12.2.5.1**, the work of building and plumbing services shall be executed under the planning, design and supervision of competent personnel. The qualification for registered mechanical engineer (including HVAC), electrical engineer and plumbing engineers for carrying out the work of Air conditioning, Heating and Mechanical Ventilation, Electrical Installations, Lifts and Escalators and Water Supply, Drainage, Sanitation and Gas Supply installations respectively shall be as given in Part 8 'Building Services' and Part 9 'Plumbing Services' of the Code or as decided by the Authority taking into account practices of the national professional bodies dealing with the specialist engineering services.

Such an approach shall be followed for association of other/multi-disciplinary professionals for taking inputs and associating with their areas of specialization.

A-2.10 BUILDER/CONSTRUCTOR

The minimum qualification for the builder/constructor or his representative for execution of respective works shall be as given in **A-2.1**, **A-2.2**, **A-2.3**, **A-2.4**, **A-2.5**, **A-2.6**, **A-2.7**, **A-2.8** and **A-2.9** for the concerned professional.

A-2.10.1 Competence

The qualified builder/constructor or his representative shall be competent to carry out execution of work, which shall have the same extent as for supervision by such professional as prescribed in **A-2.1.1**, **A-2.2.1**, **A-2.3.1**, **A-2.4.1**, **A-2.5.1**, **A-2.6.1**, **A-2.7.1**, **A-2.8.1** and **A-2.9**.

ANNEX B

(*Clauses* 12.1 *and* 12.2.7)

FORM FOR FIRST APPLICATION TO DEVELOP, ERECT, RE-ERECT OR TO MAKE ALTERATION IN ANY PLACE IN A BUILDING

To

.....

.....

.....

Sir,

I hereby give notice that I intend to develop, erect, re-erect or to make alteration in the building No. .....or to ..... on/in Plot No.....in Colony/Street..... *Mohalla/Bazar*/Road.....City .....and in accordance with the building code of .....Part 2, Clauses .....and I forward herewith the following plans and specifications in triplicate duly signed by me and ..... the Architect/Engineer/Structural Engineer/Supervisor/Town Planner/Landscape Architect/Urban Designer[1)], Registration No. .....

(Name in block letters)

1) Key plan
2) Site plans
3) Subdivision/layout plan
4) Building plans
5) Services plans
6) Specifications, general and detailed[2)]
7) Title of ownership of land/building
8) Certificate for structural design sufficiency
9) Certificate for engagement of builder/constructor(s), where applicable
10) Certificates for supervision

I request that the development/construction may be approved and permission accorded to me to execute the work.

Signature of owner .....

Name of the owner .....

(in block letters)

Address of owner .....

.....

.....

.....

Date .....

[1)] Strike out whichever is not applicable.

[2)] A format may be prepared by the Authority for direct use.

ANNEX C

(*Clause* 12.2.8)

FORM FOR CERTIFICATE FOR STRUCTURAL DESIGN SUFFICIENCY

With respect to the building work of erection, re-erection or for making alteration in the building No. ..... or to ..... on/in Plot No. ..... in Colony/ Street ..... *Mohalla/Bazar*/Road .....City ....., we certify that the structural design of the building for which building plans are being submitted for approval shall be done and submitted for approval, to satisfy the structural safety requirements for all situations including natural disasters, as applicable, as stipulated in National Building Code of India and its Part 6 'Structural Design' and other relevant Codes; and the information given therein is factually correct to the best of our knowledge and understanding.

	Signature of owner with date	Signature of the registered engineer/structural engineer[1] with date and registration No.
Name (in block letters):	.....	.....
Address :	.....	.....

[1] Strike out whichever is not applicable. The entries shall be in respect of the professional who would do the structural design.

ANNEX D

[*Clauses* 12.2.9 *and* 13.2(f)]

FORM FOR ENGAGEMENT OF BUILDER/CONSTRUCTOR

(*Before the Commencement Stage of a Project*)

With respect to the building work of erection, re-erection or for making alteration in the building No. ..... or to ..... on/in Plot No. ..... Colony/ Street ..... *Mohalla/Bazar*/Road .....City .....
I certify that the following builder/constructor is engaged by me towards carrying out/executing the construction:

Name and details of the builder/constructor or his representative including:

.....

.....

.....

.....

	Signature of the builder/ constructor or his representative (who has agreed for the execution of above work) with date	Signature of owner with date
Name (in block letters):	.....	.....
Address:	.....	.....

ANNEX E

(*Clause* 12.2.9)

FORM FOR SUPERVISION

I hereby certify that the development, erection, re-erection or material alteration in/of building No. ..... or the ..... on/in Plot No. ..... in Colony/Street ..... *Mohalla/Bazar*/Road ..... City ..... shall be carried out under my supervision and I certify that all the materials (type and grade) and the workmanship of the work shall be generally in accordance with the general and detailed specifications submitted along with, and that the work shall be carried out according to the sanctioned plans.

Signature of Registered Architect/Engineer/Structural Engineer/Supervisor/Town Planner/Landscape Architect/ Urban Designer [1] .....

Name of Registered Architect/Engineer/Structural Engineer/Supervisor/Town Planner/Landscape Architect/Urban Designer [1] ..... (in block letters)

Registration No. of Architect/Engineer/Structural Engineer/Supervisor/Town Planner/Landscape Architect/Urban Designer [1] .....

Address of Registered Architect/Engineer/Structural Engineer/Supervisor/Town Planner/Landscape Architect/Urban Designer [1]

.....

.....

.....

.....

Date .....

[1] Strike out whichever is not applicable. The entries shall be in respect of the professional who would supervise the work.

ANNEX F

(*Clause* 12.10)

FORM FOR SANCTION OR REFUSAL OF DEVELOPMENT/BUILDING PERMIT

To

.....

.....

.....

.....

Sir,

With reference to your application ..... dated ..... for grant of permit for the development, erection, re-erection or material alteration in the building No. ..... or to ..... on/in Plot No.....in Colony/Street..... *Mohalla/ Bazar*/Road ..... City..... I have to inform you that the sanction has been granted/refused by the Authority on the following grounds:

1.

2.

3.

4.

5.

6.

Office stamp .....

Office (Communication) No. .....

Date .....

Signature of the Authority .....

Name, Designation and
Address of the Authority .....

.....

.....

ANNEX G

[*Clause* 13.2 (d)]

FORM FOR NOTICE FOR COMMENCEMENT

I hereby certify that the development, erection, re-erection or material alteration in/of building No. ..... or the ..... on/in Plot No..... in Colony/Street ..... *Mohalla/Bazar*/Road ..... City ..... will be commenced on ..... as per your permission, vide No..... dated ..... under the supervision of[1] ..... Registered Architect/Engineer/Structural Engineer/Supervisor/Town Planner/Landscape Architect/Urban Designer[2], Registration No..... and in accordance with the plans sanctioned, vide No..... dated..... .

Signature of owner .....

Name of owner .....
(in block letters)

Address of owner .....

.....

.....

Date .....

---

[1] Only professional who would supervise the work shall be named.
[2] Strike out whichever is not applicable.

ANNEX H

[*Clause* 13.2(f)]

FORM FOR CERTIFICATE FOR SUBSURFACE INVESTIGATION

With respect to the building work of erection, re-erection or for making alteration in the building No..... or to ..... on/in Plot No. ..... in Colony/ Street ..... *Mohalla/Bazar*/Road .....City ....., we certify that we have carried out subsurface investigation at site and have performed various tests required to determine engineering properties of soil substrata and ground water based on which we have given recommendations about the type of foundation, soil bearing capacity and the depth at which the foundations shall be placed, considering the structural system and loads supplied by the structural engineer to enable the engineer/structural engineer to design the foundations and other structures below ground, as stipulated in National Building Code of India and its Part 6 'Structural Design, Section 2 Soils and Foundations' and other relevant Codes.

I am enclosing a copy of the report of subsurface investigation carried out as above and submitted to the Structural Engineer.

	Signature of owner with date	Signature of the registered Engineer/ Structural Engineer/ Geotechnical Engineer[1)] and registration No. with date
Name (in block letters) :	.....	.....
Address :	.....	.....

[1)] Strike out whichever is not applicable. The professional who has done the subsurface investigation shall sign.

ANNEX J

[*Clause* 13.2(f)]

FORM FOR CERTIFICATE FOR COMPLETED STRUCTURAL DESIGN WORK AS PER STRUCTURAL SAFETY REQUIREMENTS

With respect to the building work of erection, re-erection or for making alteration in the building No. ..... or to ..... on/in Plot No. ..... in Colony/ Street ..... *Mohalla/Bazar*/Road ..... City ....., we certify that the structural design, structural drawings and details of the building which has been done by us satisfy the structural safety requirements for all situations including natural disasters, as applicable, as stipulated in National Building Code of India and its Part 6 'Structural Design' and other relevant Codes considering the report of subsurface investigation, where applicable.

	Signature of owner with date	Signature of the registered engineer/ structural engineer[1)]/ and with date and registration No.
Name (in block letters) :	.....	.....
Address :	.....	.....

[1)] Strike out whichever is not applicable. The professional who has done the structural design shall sign.

ANNEX K

[*Clause* 13.2(f)]

FORM FOR CERTIFICATE FOR SUPERVISION OF WORK

With respect to the building work of erection, re-erection or for making alteration in the building No. ..... or to ..... on/in Plot No. ..... in Colony/ Street ..... *Mohalla/Bazar*/Road .....City ....., we certify,

a) that the building has been constructed according to the sanctioned plans, specifications, details and structural drawings issued to the site by the Engineer/Structural Engineer (one set of drawings as executed enclosed); and

b) that the construction has been done under our supervision and guidance and records of supervision have been maintained.

Any subsequent changes from the completion drawings shall be the responsibility of the owner.

	Signature of owner with date	Signature of the registeredArchitect/ Engineer/Structural Engineer/Supervisor/ Town Planner/Landscape Architect/Urban Designer [1] and registration No.
Name (in block letters) :	.....	.....
Address :.	.....	.....

[1] Strike out whichever is not applicable. The professional who has supervised the work shall sign.

ANNEX M

[*Clause* 13.2(f)]

FORM FOR CERTIFICATE FOR COMPLETED WORK BY BUILDER/CONSTRUCTOR

With respect to the building work of erection, re-erection or for making alteration in the building No..... or to.....on/in Plot No.....in Colony/Street .....*Mohalla/Bazar*/Road .....City....., we certify,

a) that the building has been constructed by us according to the sanctioned plans, structural drawings and details issued to the site by the Engineer/Structural Engineer[1)]; and

b) that the work has been completed with high level of workmanship observing due diligence and all the materials have been used strictly in accordance with the general and detailed specifications.

	Signature of owner with date with date	Signature of representative of the builder/constructor
Name (in block letters) :	.....	.....
Address :	.....	.....

[1)] Substitute by details of relevant services and the concerned constructor in case of execution of services works.

ANNEX N

[*Clause* 13.2 (f)]

FORM FOR COMPLETION CERTIFICATE

I hereby certify that the development, erection, re-erection or material alteration in/of building No. ..... or the ..... on/in Plot No..... in Colony/Street ..... *Mohalla/Bazar*/Road ..... City ..... has been supervised by me and has been completed on ..... according to the plans sanctioned, vide No. ..... dated..... . The work has been completed to my best satisfaction, the workmanship and all the materials (type and grade) have been used strictly in accordance with general and detailed specifications subject to compliance the minimum parameters specified in National Building Code of India. No provisions of the Code, no requisitions made, conditions prescribed or orders issued thereunder have been transgressed in the course of the work. The land is fit for construction for which it has been developed or redeveloped or the building is fit for use for which it has been erected, re-erected or altered, constructed and enlarged.

I hereby also enclose the plans, drawings, details, reports and certificates of the building/work as executed, as follows:

1) Plans of completed works
2) Structural design, drawings and details
3) Services drawings and details (mechanical/electrical/plumbing/fire)
4) Certificate for subsurface investigation along with a copy of report
5) Certificate for completed structural design work as per structural safety requirements
6) Certificate for supervision of execution of work
7) Certificate for completed work by the builder/constructor

Permission to occupy or use the building may be granted.

Any subsequent change from completion drawings shall be the responsibility of the owner.

Signature of Architect/Engineer/Structural Engineer/Supervisor/Town Planner/Landscape Architect/Urban Designer[1)] .....

Name of Architect/Engineer/Structural Engineer/Supervisor/Town Planner/Landscape Architect/Urban Designer [1)] ..... (in block letters)

Registration No. of Architect/Engineer/Structural Engineer/Supervisor/Town Planner/ Landscape Architect/ Urban Designer [1)] .....

Address of Architect/Engineer/Structural Engineer/Supervisor/Town Planner/Landscape Architect/Urban Designer [1)] .....

.....

Signature of the owner

Date .....

[1)] Strike out whichever is not applicable.

ANNEX P

[*Clause* 13.2(h)]

FORM FOR OCCUPANCY PERMIT

The work of erection, re-erection or alteration in/of building No. .....or the .....on/in Plot No.....in Colony/Street..... *Mohalla/Bazar*/Road .....City .....completed under the supervision of ..... Architect/ Engineer/Structural Engineer/Supervisor, Registration No.....has been inspected by me. The building can be permitted/not permitted for occupation for.....occupancy subjected to the following:

1.

2.

3.

One set of completion plans duly certified is returned herewith.

Signature of the Authority .....

Office stamp

Date .....

NATIONAL BUILDING CODE OF INDIA

PART 3 DEVELOPMENT CONTROL RULES AND GENERAL BUILDING REQUIRMENTS

BUREAU OF INDIAN STANDARDS

CONTENTS

FOREWORD ... 3

1 SCOPE ... 9

2 TERMINOLOGY ... 9

3 LAND USE CLASSIFICATION AND USES PERMITTED ... 14

4 MEANS OF ACCESS ... 16

5 COMMUNITY OPEN SPACES AND AMENITIES ... 19

6 REQUIREMENTS OF PLOTS ... 32

7 CLASSIFICATION OF BUILDINGS ... 34

8 OPEN SPACES (WITHIN A PLOT) ... 34

9 AREA AND HEIGHT LIMITATIONS ... 40

10 OFF-STREET PARKING SPACES ... 42

11 GREENBELTS, LANDSCAPING AND WATER CONSERVATION ... 43

12 REQUIREMENTS OF PARTS OF BUILDINGS ... 43

13 REQUIREMENTS FOR ACCESSIBILITY IN BUILT ENVIRONMENT FOR ELDERS AND PERSONS WITH DISABILITIES ... 49

14 SPECIAL REQUIREMENTS OF LOW INCOME HOUSING IN URBAN AREAS ... 57

15 SPECIAL REQUIREMENTS FOR CLUSTER PLANNING FOR HOUSING ... 57

16 SPECIAL REQUIREMENTS FOR LOW INCOME HABITAT PLANNING IN RURAL AREAS ... 57

17 SPECIAL REQUIREMENTS FOR DEVELOPMENT PLANNING IN HILLY AREAS ... 57

18 FIRE AND LIFE SAFETY ... 57

19 DESIGN AND CONSTRUCTION ... 57

20 LIGHTING AND VENTILATION ... 57

21 ELECTRICAL AND ALLIED INSTALLATIONS (INCLUDING LIGHTNING PROTECTION OF BUILDINGS AND SOLAR ENERGY UTILIZATION) ... 58

22 AIR CONDITIONING, HEATING AND MECHANICAL VENTILATION ... 58

23 ACOUSTICS, SOUND INSULATION AND NOISE CONTROL ... 59

24 HEAT INSULATION ... 59

25 INSTALLATION OF LIFTS, ESCALATORS AND MOVING WALKS ... 59

26 INFORMATION AND COMMUNICATION ENABLED INSTALLATIONS ... 59

27 PLUMBING SERVICES (INCLUDING SOLID WASTE MANAGEMENT) ... 59

28 SUSTAINABILITY ... 59

29 ASSET AND FACILITY MANAGEMENT ... 59

ANNEX A OFF-STREET PARKING SPACES ... 60

ANNEX B ANTHROPOMETRICS AND REQUIREMENTS FOR ACCESSIBILITY IN BUILT-ENVIRONMENT FOR ELDERS AND PERSONS WITH DISABILITIES ... 61

ANNEX C SPECIAL REQUIREMENTS FOR LOW INCOME HOUSING IN URBAN AREAS ...136

ANNEX D SPECIAL REQUIREMENTS OF CLUSTER PLANNING FOR HOUSING ...140

ANNEX E SPECIAL REQUIREMENTS FOR LOW INCOME HABITAT PLANNING IN RURAL AREAS ...141

ANNEX F SPECIAL REQUIREMENTS FOR DEVELOPMENT PLANNING IN HILLY AREAS ...144

LIST OF STANDARDS ...149

FOREWORD

This Code (Part 3) covers development control rules, including such aspects as subdivision and layout rules, land use classifications, open spaces, area and height limitations, means of access, and parking spaces. This Part also covers the general building requirements, including those of various parts of buildings.

It is expected that for proper coordination and enforcement of the development control rules and general building requirements, the departments concerned, namely, the town and country planning department, urban development authority, urban local body and the building department, will coordinate the total development and building activity at both organizational and technical levels.

Particular attention is invited to Table 5 on floor area ratio (FAR) limitations. It is emphasized that the floor area of a single storey building is limited in absolute terms by the type of construction and occupancy class. Also, the absolute floor areas for different types of construction and different occupancies have a definite ratio among them. The ratios as recommended in the American Iron and Steel Institute Publication of 1961 'Fire protection through modern building codes' have been generally adopted in this Part and Table 5 has been developed on this basis. This, Table 5 is repeated in Part 4 'Fire and Life Safety' of the Code also, for convenience of reading.

Limitation of areas and heights of buildings are regulated by specifying floor area ratio (FAR) or floor space index (FSI) and ground coverage. The significance of the contribution of different types of construction giving different fire resistances has not been taken cognizance of in specifying FAR for different occupancies, in the present development control rules and municipal byelaws of the country. Table 5, therefore, gives the comparative ratios of FAR between types of buildings and occupancy classes and these have been specified mainly from the fire protection aspect of buildings. To arrive at the actual FAR for different buildings coming up in different areas, the Authority should further modify them, by taking into consideration other aspects like population density of any area, parking facilities required, the traffic load (road width) and the services available. The heights of buildings shall also be regulated, keeping in view the local fire fighting facilities.

In some state byelaws, the FAR (or FSI) has been expressed in the form of percentage. However, the Committee responsible for the preparation of this Code is of the opinion that, it being a ratio should be expressed only in the form of a ratio, as done in this Part.

It is particularly to be borne in mind by the Authority that the ratios are definitive and it may assess the particular FAR for a type of construction and for an occupancy and establish a new table, but retaining the comparative ratios as given in Table 5.

Keeping in view the enormous problems faced by the country with regard to the ever increasing squatter settlements/ pavement dwellers in urban areas (cities of all sizes), it is imperative that all the urban local bodies and urban development authorities sooner or later evolve schemes for their rehabilitation. The resources are meagre and the problems are enormous. There has been a tendency on the part of a number of urban development authorities/ urban local bodies to link space norms with affordability. Affordability is an important criterion but at the same time a public agency may not ignore the basic minimum needs of the family to be housed (including the mental, physical and social health of the marginalized groups, which is linked with shelter). The urban local bodies shall have to evolve appropriate policies for their integration with the overall development process and generate/ allocate resources and more importantly adopt a planning process, which are people friendly and inclusive. Therefore, keeping in view the needs of low income housing, to cater to Economically Weaker Sections of Society (EWS) and Low Income Group (LIG), the requirements on planning, design of layout/shelter have been rationalized and the same are provided in this Part. This information is based on the provisions of IS 8888 (Part 1):1993 'Guide for requirements of low income housing: Part 1 Urban areas (*first revision*)'.

It is important that the fruits of development are equally shared by all cross-section of the society irrespective of their age and abilities. This Code therefore covered provisions for buildings and built environment to ensure a barrier-free

environment for elders and persons with disabilities. The goal of barrier free design is to provide an environment that supports the independent functioning of individuals so that they can participate without assistance, in everyday activities. It has been intended to progressively update these provisions and make the same more effective and elaborate based on experience gained with the implementation of the Code and feedback received from stakeholders. As a conscious decision, opportunity has been taken in this revision of the Code to further mainstream the issue of barrier free environment by covering the requirements at greater length. The concept of universal design has also been included herein that promotes the usability of built environment by all without discrimination. It is worthwhile to note that *The Persons with Disabilities (Equal Opportunities, Protection of Rights and Full Participation) Act*, 1995 in its Chapter VIII 'Non-Discrimination', Section 44 to 46 mandates accessibility in public buildings and transportation systems. National policy for persons with disabilities also emphasizes the role of barrier-free environment as one that enables people with disabilities to move about safely and freely, and use the facilities within the built environment. Therefore, to the maximum extent possible, buildings/places/transportation systems for public use should be made barrier free. India has also signed and ratified the UN Convention on Rights of Persons with Disabilities that casts an obligation on the member states in its Article 9'Accessibility', to enable persons with disabilities to live independently and participate fully in all aspects of life.

Further, city development process would need a dynamic approach to take care of urban renewal and also development needs in dense core areas of the cities. Innovative approaches in planning and design with participatory models of public private-people's partnership become necessary to solve the emerging development needs. With this in view, many city development authorities have evolved innovative planning and development tools like transferable development rights (TDR) where the developer would receive a portion of the development rights in a new location, keeping in view the constraints in the existing land area and the development potential. Such development rights may be transferred into outskirts or new developed areas where land availability is assured. This would encourage the professionals and developers to participate in urban renewal and at the same time ensure that the developments in both the inner core areas and new areas take place in a planned manner. The TDR concept should be increasingly encouraged by the authority dealing with urban renewal, redevelopment projects including housing and redevelopment projects for slum dwellers.

Transit oriented development (TOD), as a concept, integrates land uses and mass transportation such as bus rapid transit (BRT) and rail based transit like metro-rail, mono-rail, light-rail, ring-rail, etc. The basic objective is to plan cities in a manner where people conveniently walk and use public transport for most of their trips and, thus, reduce dependence on private mode and provide benefits to the city which include reduction in congestion, delays and accidents on roads; reduction of pollution caused by automobiles; and improvement in liveability, mobility and convenience of the citizens. TOD makes city compact and increases its efficiency and functioning. The TOD is desirable as it, (a) reduces/discourages private vehicle dependency and induces public transport use though planning, designing, policy measures and enforcement; and (b) provides easy access to public transport, within walking distance, to a majority of people, through densification and enhanced connectivity.

Some of the planning and design principles applied to create TOD include creation of,

a) pedestrian and non-motorized transport friendly environment;
b) efficient public and para-transport system supporting the transit system;
c) multi-modal interchange and street connectivity;
d) mixed land uses and appropriate intensity of development; and
e) well designed and integrated parking thus requiring reduced parking requirements in comparison to the norms given in this Part.

TOD concept may be suitable for all newly planned green field cities. However, it can also be applied to existing brown field cities where new expansion/development are taken up backed up with effective mass rapid transport system and new nodes. The Authorities may take up appropriate studies to evaluate suitability of TOD concept under relevant situations.

Urbanization in India is taking place at a rapid pace. As per the 2011 Census, 31.16 percent of the country's population resides in urban areas. This figure was 27.8 percent in 2001. The urban component is expected to rise to around 40 percent by 2020. As Indian cities continue to grow demographically and spatially, the challenge of improving urban infrastructure is enormous. While the number of urban centres has increased manifold between 1901 and 2011, the urban population increased six fold, resulting in a top-heavy urban settlement hierarchy with a large number of primate settlements. It is expected that the number of towns and cities which was 7 933 as per Census, 2011 is likely to cross the 10 000 mark in next two decades. As a result of liberalization, the demographic

trends of urbanization are accompanied by both challenges and opportunities in the management and financing of urban development.

Unprecedented urbanization has been fuelled by rapid economic growth and even more rapid industrialization especially in the past three decades or so. With globalization, this trend of rapid economic growth and urbanization is likely to accentuate further. In 1901, Kolkata was the only metropolitan city (million plus) in the country. The number of metropolitan cities increased to 5 in 1951, 12 in 1981, 23 in 1991, 35 in 2001 and 53 in 2011. The 53 metropolitan cities together account for a population of about 158 million in 2011, that is, 42 percent of urban population of the country. It is expected that this number would be about 85 by 2051.

Going by the present trends, by 2051, India would be the most populous country with 1.70 billion people and 0.19 ha per capita land availability. By 2051, 820 million people will live in urban settlements constituting about 50 percent of the total population. Cities in the country would emerge as centres of both hope and despair: while being engines of economic and social development they may also be congested centres of poverty and environmental degradation. The million plus cities constitute 42 percent of the total urban population, while the Class I (more than 1 lakh population) towns constituted 60.04 percent, followed by 11 percent in Class II (50 000-100 000 population) towns, 15.4 percent in Class III (20 000- 50 000 population) towns and the rest 13.56 percent constituted by Class IV, V and VI towns (less than 20 000 population).

Further, in the Indian practice, mega-cities (cities over 50 lakhs population) are 8 in number; metro-cities (cities having 10 to 50 lakhs population) are 45 in number. These 53 cities above 10 lakhs population is likely to be above 70 by 2021. The other cities are either small or medium towns or cities with different population limits. Urbanization in above cities and towns (mega-cities, metro-cities, small and medium towns and cities) will be different in nature and the development challenges are also different keeping in view the extent of urbanization, industrialization, commercialization and the nature of transportation needs. Therefore, the Code provisions should be appropriately utilized depending upon the need of hierarchy of cities for which the administrative and technical requirements have been covered in the Code for various facets of the activity.

The first version of this Part was formulated in 1970. As a result of incorporation of this Part in the revised development control rules and building byelaws of some municipal corporations and municipalities, some useful suggestions had emerged. The first revision of this Part was brought out in 1983, where these suggestions were incorporated to the extent possible. The major modifications incorporated in the first revision included:

a) Addition of development control rules giving guidance on means of access, community spaces and other aspects required for planning layouts.
b) Addition of provisions regarding plot sizes and frontage for different types of buildings, such as detached, semi-detached, row type and special housing schemes.
c) Requirements of open spaces for other occupancies, such as educational, institutional, assembly, industrial buildings, etc were included.
d) Provisions relating to interior open space were elaborated, including requirements for ventilation shaft.
e) Requirements of open spaces for group housing development were covered.
f) Requirements of off-street parking spaces were covered.
g) Requirements for greenbelts and landscaping including norms for plantations of shrubs and trees were covered.
h) Requirements of certain parts of buildings, such as loft, store room, garage, basement, chimney, parapet, cabin, boundary wall, wells, septic tanks, office-cum-letter box room, meter room were included.
j) Special requirements of low income housing were covered.

The term Development Control Rules used in this Part encompasses the related aspects comprehensively with a view to promoting orderly development of an area.

The major modifications incorporated in the second revision included:

a) Terminology given in this Part were made exhaustive by incorporating definitions of additional terms used, such as access, chimney, to erect, etc, and number of terms pertaining to cluster planning for housing.
b) Detailed planning norms/open spaces for various amenities such as educational facilities, health care facilities, socio-cultural facilities, distribution services, police, civil defence and home guards, and fire services were included.

c) Off-street parking requirements were also included for cities with population, (1) between 1 000 000 and 5 000 000, and (2) above 5 000 000 (*see* Annex A).

d) Special requirements for low income housing were modified and updated based on the revision of concerned Indian Standard namely IS 8888:1978 as IS 8888 (Part 1):1993 'Guide for requirements of low income housing : Part 1 Urban area (*first revision*)'. Single room dwelling was discouraged, guidelines for water seal latrine were incorporated, and cluster planning approach were recommended.

e) Requirements for cluster planning for housing were added based on the guidelines given in IS 13727:1993 'Guide for requirements of cluster planning for housing'.

f) Special requirements for low income housing for rural habitat planning were added.

g) Special requirements for development planning in hilly areas were added.

h) The requirements for buildings and facilities for the physically challenged were revised, with listing of additional categories of physically challenged; modifications in requirements of ramps, stairs, doors, handrails and controls; and incorporation of additional requirements regarding windows.

In this third revision, following major modifications have been incorporated:

a) Definitions of additional terms have been included and some of the existing definitions have been modified in the terminology clause.

b) Reference of IS 3861 : 2002 'Method of measurement of plinth, carpet and rentable areas of buildings (*second revision*)' has been added for correct interpretation of plinth area and built-up area.

c) Land use classification has been modified.

d) A new clause on footpaths giving guidance on width of footpath to be adopted based on expected pedestrian traffic as also recommended width of footpath corresponding to adjacent land use, has been added.

e) Provisions on Transferable Development Rights (TDR) has been included.

f) Provisions on Accommodation Reservation (AR) have been included.

g) Provisions for buildings on podium including permitted uses in podium, general requirements for the same and requirements for fire tender movement have been incorporated under the clause on means of access.

h) Planning norms for amenities have been modified and new amenities have been covered.

j) Requirements for minimum clearances from an overhead electric supply line have been modified based on current *Central Electricity Authority (Measures Relating to Safety and Electric Supply) Regulations,* 2010 taking into account effect of sag and wind pressure.

k) Provisions for sunken courtyard have been added for meeting the light and ventilation requirements for basement area.

m) For height restrictions in the vicinity of aerodromes, reference to concerned notification of the Ministry of Civil Aviation, Govt of India has been made.

n) Considering that high density developments are being increasingly promoted in master plans and development policies, maximum coverage and floor area ratio for densities 200 to 400 dwelling units/ hectare have been added.

p) Provisions for underground or multi-storeyed parking as also mechanized parking of vehicles has been included.

q) Provisions relating to basements have been reviewed and updated keeping in view the latest developments.

r) Requirements for accessibility in buildings and built environment for elders and persons with disabilities have been thoroughly revised and updated.

s) Provisions for solar energy utilization have been included.

t) Norms for off-street parking spaces have been revised.

u) Special requirements for low income housing have been updated.

w) Special requirements for development planning in hilly areas have been updated.

The information contained in this Part is also based on the following Indian Standards:

IS 4963 : 1987	Recommendations for buildings and facilities for physically handicapped (*first revision*)

IS 8888 (Part 1) : 1993 Guide for requirements of low income housing : Part 1 Urban area (*first revision*)

IS 13727 : 1993 Guide for requirements of cluster planning for housing

IS 4963 : 1987 is under revision, the provisions of revised version of this standard shall be referred when available.

In revising the provisions of this Part, assistance has also been derived from the following publications:

Urban and Regional Development Plans Formulation and Implementation Guidelines, 2014, Town and Country Planning Organization

IRC : 103-2012 Guidelines for Pedestrian Facilities (*first revision*)

ISO 21542 : 2011 Building construction — Accessibility and usability of the built environment

Planning a barrier free environment, 2011 prepared by Office of the Chief Commissioner for Persons with Disabilities, Ministry of Social Justice and Empowerment, Government of India

Harmonized guidelines and space standards for barrier free built environment for persons with disability and elderly persons, Ministry of Urban Development, 2016

All standards cross-referred here or in the main text of this Part, are subject to revision. The parties to agreement based on this Part are encouraged to investigate the possibility of applying the most recent editions of the standards.

For the purpose of deciding whether a particular requirement of this Part of the Code is complied with, the final value, observed or calculated, expressing the result of a test or analysis, shall be rounded off in accordance with IS 2 : 1960 'Rules for rounding off numerical values (*revised*)'. The number of significant places retained in the rounded off value should be the same as that of the specified value in this Part.

NATIONAL BUILDING CODE OF INDIA

PART 3 DEVELOPMENT CONTROL RULES AND GENERAL BUILDING REQUIREMENTS

1 SCOPE

This Part deals with the development control rules and general building requirements to ensure health and safety of the public.

2 TERMINOLOGY

For the purpose of this Part, the following definitions shall apply.

2.1 Access — A clear approach to a plot or a building.

2.2 Accessory Use — Any use of the premises subordinate to the principal use and customarily incidental to the principal use.

2.3 Alteration — A change from one occupancy to another, or a structural change, such as an addition to the area or height, or the removal of part of a building, or any change to the structure, such as the construction of, cutting into or removal of any wall, partition, column, beam, joist, floor (including a mezzanine floor) or other support, or a change to or closing of any required means of ingress or egress or a change to the fixtures or equipment.

2.4 Approved — Approved by the Authority having jurisdiction.

2.5 Authority Having Jurisdiction — The Authority which has been created by a statute and which for the purpose of administering the Code/Part may authorize a committee or an official to act on its behalf; hereinafter called the 'Authority'.

2.6 Back-to-Back Cluster — Clusters when joined back to back and/or on sides (*see* Fig. 1).

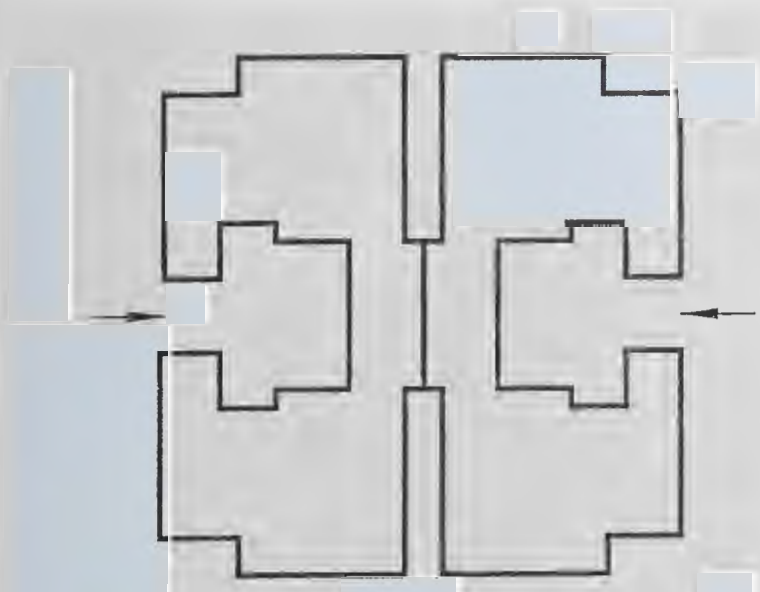

FIG. 1 BACK TO BACK CLUSTER

2.7 Balcony — A horizontal projection, with a handrail or balustrade or a parapet, to serve as passage or sitting out place.

2.8 Basement or Cellar — The lower storey of a building, below or partly below ground level.

2.9 Building — Any structure for whatsoever purpose and of whatsoever materials constructed and every part thereof, whether used as human habitation or not and includes foundation, plinth, walls, floors, roofs, chimneys, plumbing and building services, fixed platforms, *Verandah*, balcony, cornice or projection, part of a building or anything affixed thereto or any wall enclosing or intended to enclose any land or space and signs and outdoor display structures. Tents, *Shamianahs*, tarpaulin shelters, etc, erected for temporary and ceremonial occasions with the permission of the Authority shall not be considered as building.

2.10 Building, Height of — The vertical distance measured in the case of flat roofs, from the average level of the ground around and contiguous to the building or as decided by the Authority to the terrace of last livable floor of the building adjacent to the external walls; and in the case of pitched roofs, up to the point where the external surface of the outer wall intersects the finished surface of the sloping roof; and in the case of gables facing the road, the mid-point between the eaves level and the ridge. Architectural features serving no other function except that of decoration shall be excluded for the purpose of measuring heights. *See* **9.4.2.1**.

2.11 Building Envelope — The horizontal spatial limits up to which a building may be permitted to be constructed on a plot.

2.12 Building Line — The line up to which the plinth of a building adjoining a street or an extension of a street or on a future street may lawfully extend. It includes the lines prescribed, if any, in any scheme. The building line may change from time to time as decided by the Authority.

2.13 Cabin — A non-residential enclosure constructed of non-load bearing partition.

2.14 Canopy — A projection over any entrance.

2.15 Carpet Area — The covered area of the usable rooms at any floor level (excluding the area of the wall) {*see* accepted standard [3(1)]}.

2.16 *Chhajja* — A sloping or horizontal structural overhang usually provided over openings on external walls to provide protection from sun and rain.

2.17 Chimney — An upright shaft containing one or more flues provided for the conveyance to the outer air of any product of combustion resulting from the operation of heat producing appliance or equipment employing solid, liquid or gaseous fuel.

2.18 Chowk or Courtyard — A space permanently open to the sky, enclosed fully or partially by building and may be at ground level or any other level within or adjacent to a building.

2.19 Chowk, Inner — A chowk enclosed on all sides.

2.20 Chowk, Outer — A chowk one of whose sides is not enclosed.

2.21 Closed Clusters —Clusters with only one common entry into cluster open space (*see* Fig. 2).

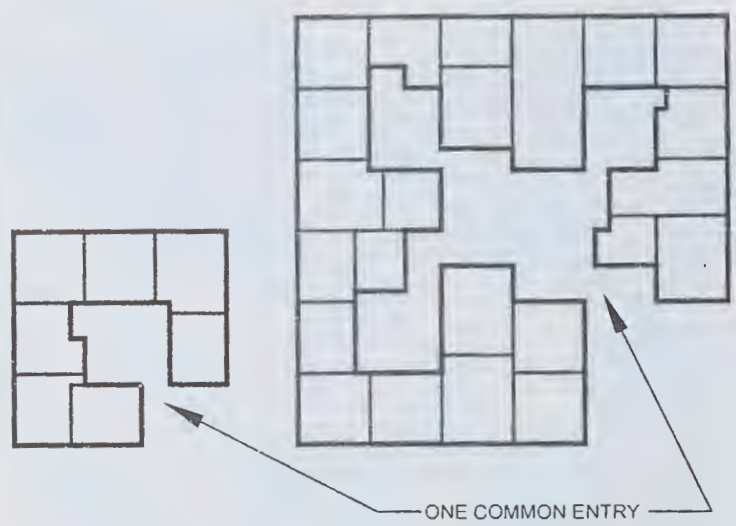

FIG. 2 CLOSED CLUSTER

2.22 Cluster — Plots or dwelling units or housing grouped around an open space (*see* Fig. 3). Ideally housing cluster should not be very large. In ground and one storeyed structures not more than 20 houses should be grouped in a cluster. Clusters with more dwelling units will create problems in identity, encroachments and of maintenance.

2.23 Cluster Court Town House — A dwelling in a cluster plot having100 percent or nearly 100 percent ground coverage with vertical expansion, generally limited to one floor only and meant for self use.

2.24 Cluster Plot — Plot in a cluster.

2.25 Cooking Alcove — A cooking space having direct access from the main room without any inter-communicating door.

2.26 Covered Area — Ground area covered by the building immediately above the plinth level. The area covered by the following in the open spaces is excluded

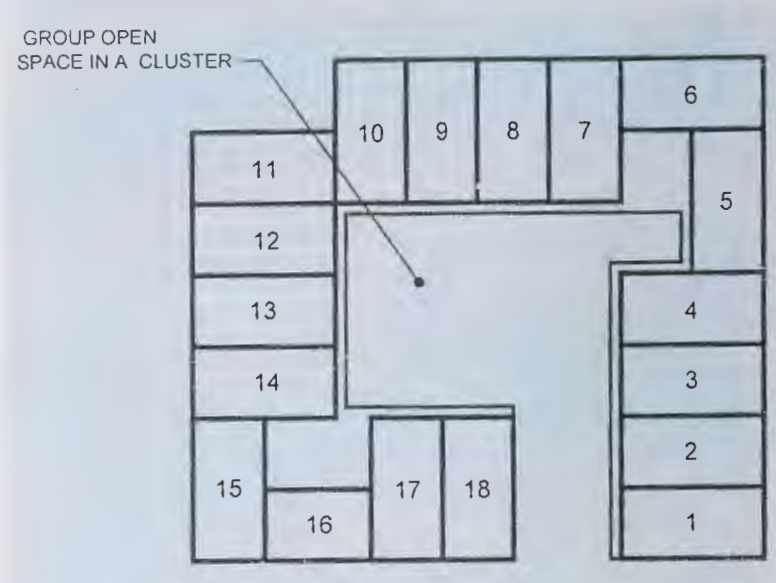

FIG. 3 CLUSTER

from covered area (*see* Table 5) :

a) Garden, rockery, well and well structures, plant nursery, water pool, swimming pool (if uncovered), platform round a tree, tank, fountain, bench, *Chabutra* with open top and unenclosed on sides by walls and the like;

b) Drainage culvert, conduit, catch-pit, gully pit, chamber, gutter and the like;

c) Compound wall, gate, unstoreyed porch and portico, canopy, slide, swing, uncovered staircase, ramps areas covered by *Chhajja* and the like; and

d) Watchmen's booth, pump house, garbage shaft, electric cabin or sub-stations, and such other utility structures meant for the services of the building under consideration.

NOTE — For the purpose of this Part, covered area equals the plot area minus the area due for open spaces.

2.27 *'Cul-de-Sac'* Cluster

Plots/dwelling units when located along a pedestrianized or vehicular '*cul-de-sac*' road (*see* Fig. 4).

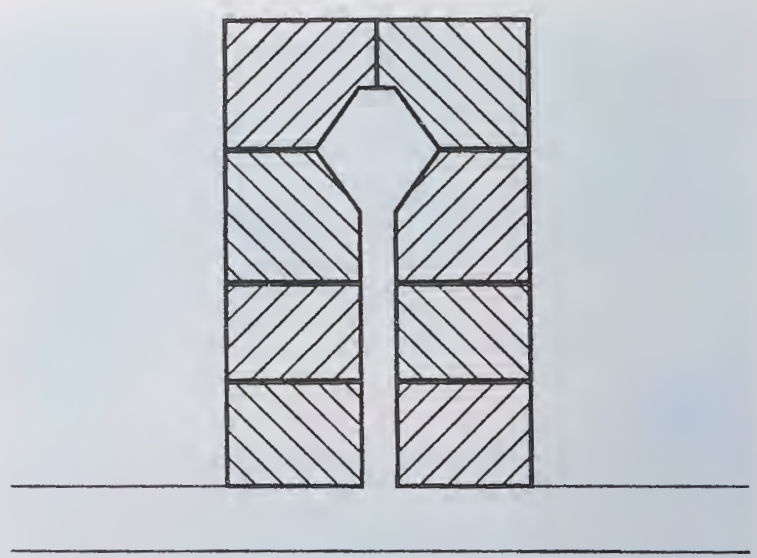

FIG. 4 *CUL-DE-SAC* CLUSTER

2.28 Density — The residential density expressed in terms of the number of dwelling units per hectare.

NOTE — Where such densities are expressed exclusive of community facilities and provision of open spaces and major roads (excluding incidental open spaces), these will be net residential densities. Where these densities are expressed taking into consideration the required open space provision and community facilities and major roads, these would be gross residential densities at neighbourhood level, sector level or town level, as the case may be. The provision of open spaces and community facilities will depend on the size of the residential community.

Incidental open spaces are mainly open spaces required to be left around and in between two buildings to provide lighting and ventilation.

2.29 Detached Building — A building detached on all sides.

2.30 Development — 'Development' with grammatical variations means the carrying out of building, engineering, mining or other operations, in, or over, or under land or water, on the making of any material change, in any building or land, or in the use of any building, land, and includes redevelopment and layout and subdivision of any land: and 'to develop' shall be construed accordingly.

2.31 Drain — A conduit, channel or pipe for the carriage of storm water, sewage, waste water or other water borne wastes in a building drainage system.

2.32 Drainage — The removal of any liquid by a system constructed for the purpose.

2.33 Dwelling Unit/Tenement — An independent housing unit with separate facilities for living, cooking and sanitary requirements.

2.34 Escalator — A power driven, inclined, continuous moving stairway used for raising or lowering passengers.

2.35 Exit — A passage, channel or means of egress from any building, storey or floor area to a street or other open space of safety.

2.36 External Faces of Cluster — Building edges facing the cluster open spaces.

2.37 Fire Separation — The distance in metres measured from the external wall of the building concerned to the external wall of any other building on the site, or from other site, or from the opposite side of a street or other public space for the purpose of preventing the spread of fire.

2.38 Floor — The lower surface in a storey on which one normally walks in a building. The general term 'floor' unless specifically mentioned otherwise shall not refer to a 'mezzanine floor'.

2.39 Floor Area Ratio (FAR) — The quotient obtained by dividing the total covered area (plinth area) on all floors by the area of the plot:

$$\text{FAR} = \frac{\text{Total covered area of all floors}}{\text{Plot area}}$$

2.40 Gallery — An intermediate floor or platform projecting from a wall of an auditorium or a hall providing extra floor area, additional seating accommodation, etc. It shall also include the structures provided for seating in stadia.

2.41 Garage, Private — A building or a portion thereof designed and used for parking of private owned motor driven or other vehicles.

2.42 Garage, Public — A building or portion thereof, other than a private garage, designed or used for repairing, servicing, hiring, selling or storing or parking motor driven or other vehicles.

2.43 Group Housing — Housing for more than one dwelling unit, where land is owned jointly (as in the case of cooperative societies or the public agencies, such as local authorities or housing boards, etc) and the construction is undertaken by one Agency.

2.44 Group Open Space — Open space within a cluster.

Group open space is neither public open space nor private open space. Each dwelling unit around the cluster open space have a share and right of use in it. The responsibility for maintenance of the same is to be collectively shared by all the dwelling units around.

2.45 Habitable Room — A room occupied or designed for occupancy by one or more persons for study, living, sleeping, eating, kitchen if it is used as a living room, but not including bathrooms, water-closet compartments, laundries, serving and store pantries, corridors, cellars, attics, and spaces that are not used frequently or during extended periods.

2.46 Independent Cluster — Clusters surrounded from all sides by vehicular access roads and/or pedestrian paths (*see* Fig. 5).

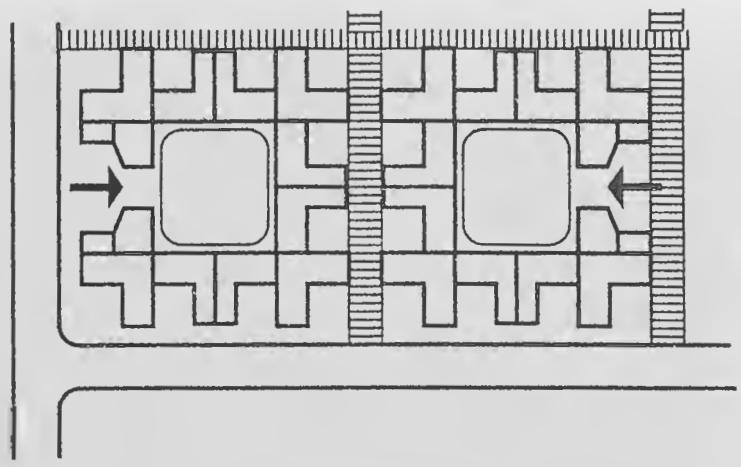

FIG. 5 INDEPENDENT CLUSTER

2.47 Interlocking Cluster — Clusters when joined at back and on sides with at least one side of a cluster common and having some dwelling units opening onto or having access from the adjacent clusters.

Dwelling units in such clusters should have at least two sides open to external open space. Houses in an interlocking cluster may have access, ventilation and light from the adjacent cluster and should also cater for future growth (*see* Fig. 6).

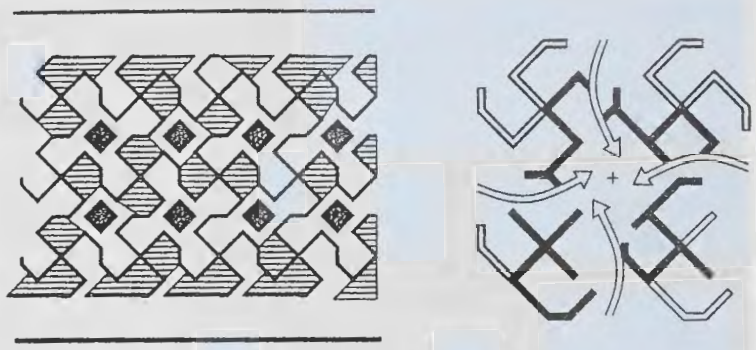

FIG. 6 INTERLOCKING CLUSTER

2.48 Internal Faces of Cluster — Building edges facing the adjacent cluster open space (as in case of interlocking cluster) of the surrounding pedestrian paths or vehicular access roads.

2.49 Ledge or *Tand* — A shelf-like projection, supported in any manner whatsoever, except by means of vertical supports within a room itself but not having projection wider than 1 m.

2.50 Lift — An appliance designed to transport persons or materials between two or more levels in a vertical or substantially vertical direction by means of a guided car or platform. The word 'elevator' is also synonymously used for 'lift'.

2.51 Loft — A structure providing intermediate storage space in between two floors with a maximum height of 1.5 m, without having a permanent access.

2.52 Master Plan — A master plan formulated under any relevant act (Town and Country Planning or Development Act or Municipal Act) for any town, approved and notified by the State Government.

2.53 Mezzanine Floor — An intermediate floor between two floors of any storey forming an integral part of floor below.

2.54 Occupancy or Use Group — The principal occupancy for which a building or a part of a building is used or intended to be used; for the purposes of classification of a building according to occupancy; an occupancy shall be deemed to include subsidiary occupancies which are contingent upon it.

2.55 Occupancy, Mixed — A multiple occupancy where the occupancies are intermingled.

2.56 Open Clusters — Clusters where cluster open spaces are linked to form a continuous open space (*see* Fig. 7).

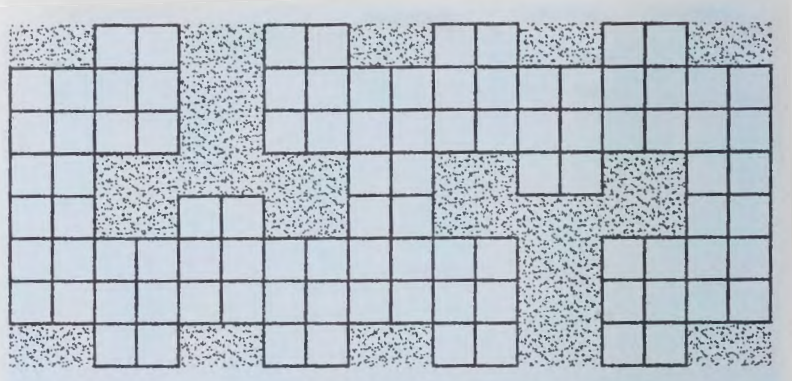

FIG. 7 OPEN CLUSTER

2.57 Open Space — An area, forming an integral part of the plot, left open to the sky.

NOTE — The open space shall be the minimum distance measured between the front, rear and side of the building and the respective plot boundaries.

2.58 Open Space, Front — An open space across the front of a plot between the building line and front boundary of the plot.

2.59 Open Space, Rear — An open space across the rear of a plot between the rear of the building and the rear boundary of the plot.

2.60 Open Space, Side — An open space across the side of the plot between the side of the building and the side boundary of the plot.

2.61 Owner — A person, a group of persons or a body having a legal interest in land and/or building thereon. This includes free holders, leaseholders or those holding a sublease, who will have a legal right to occupation and have liabilities in respect of safety or building condition.

In case of lease or sublease holders, as far as ownership with respect to the structure is concerned, the structure of a flat or structure on a plot belongs to the allottee/ lessee till the allotment/lease subsists.

Note — For the purpose of the Code, the word 'owner' will also cover the generally understood terms like 'client', 'user', etc.

2.62 Parapet — A low wall or railing built along the edge of a roof or floor.

2.63 Parking Space — An area enclosed or unenclosed, covered or open, sufficient in size to park vehicles, together with a drive-way connecting the parking space with a street or alley and permitting ingress and egress of the vehicles.

2.64 Partition — An interior non-load bearing barrier, one storey or part-storey in height.

2.65 Plinth — The portion of a structure between the surface of the surrounding ground and surface of the floor, immediately above the ground.

2.66 Plinth Area — The built up covered area measured at the floor level of the basement or of any storey {*see* accepted standard [3(1)]}.

2.67 Porch — A covered structure supported on pillars or otherwise for the purpose of pedestrian or vehicular approach to a building.

2.68 Road — *See* 'Street'.

2.69 Road Line — *See* 'Street Line'.

2.70 Room Height — The vertical distance measured from the finished floor surface to the finished ceiling surface. Where a finished ceiling is not provided, the underside of the joists or beams or tie beams shall determine the upper point of measurement.

2.71 Row Housing/Row Type Building — A row of buildings, with only front, rear and interior open spaces, where applicable.

2.72 Semi-Detached Building — A building detached on three sides.

2.73 Service Road/Lane — A road/lane provided adjacent to a plot(s) for access or service purposes as the case may be.

2.74 Set-Back Line — A line usually parallel to the plot boundaries and laid down in each case by the Authority, beyond which nothing may be constructed towards the plot boundaries.

2.75 Site (Plot) — A parcel (piece) of land enclosed by definite boundaries.

2.76 Site, Corner — A site at the junctions of and fronting on two or more intersecting streets.

2.77 Site, Depth of — The mean horizontal distance between the front and rear site boundaries.

2.78 Site, Double Frontage — A site, having a frontage on two strects, other than a corner plot.

2.79 Site, Interior or Tandem — A site access to which is by a passage from a street whether such passage forms part of thc site or not.

2.80 Staircover (or *Mumty*) — A structure with a roof over a staircase and its landing built to enclose only the stairs for the purpose of providing protection from weather and not used for human habitation.

2.81 Storey — The portion of a building included between the surface of any floor and the surface of the floor next above it, or if there be no floor above it, then the space between any floor and the ceiling next above it.

2.82 Storey, Topmost — The uppermost storey in a building whether constructcd wholly or partly on the roof.

2.83 Street — Any means of access, namely, highway, street, lane, pathway, alley, stairway, passageway, carriageway, footway, square, place or bridge, whether a thoroughfare or not, over which the public have a right of passage or access or have passed and had access uninterruptedly for a specified period, whether existing or proposed in any scheme, and includes all bunds, channels, ditches, storm-water drains, culverts, footpaths, sidewalks, traffic islands, roadside trees and hedges, retaining walls, fences, barriers and railings within the street lines.

2.84 Street Level or Grade — The officially established elevation or grade of the central line of the street upon which a plot fronts and if there is no officially established grade, the existing grade of the street at its mid-point.

2.85 Street Line — The line defining the side limits of a street.

2.86 To Erect — To erect a building means,

a) to erect a new building on any site whether previously built upon or not; and

b) to re-erect any building of which portions above the plinth level have been pull down, burnt or destroyed.

2.87 Tower-Like Structures — Structures shall be deemed to be tower-like structures when the height of the tower-like portion is at least twice the height of the broader base at ground level.

2.88 *Verandah* — A covered area with at least one side open to the outside with the exception of 1 m high parapet on the upper floors to be provided on the open side.

2.89 Volume to Plot Area Ratio (VPR) — The ratio of volume of building measured in cubic metre to the area of the plot measured in square metre, and expressed in metre.

2.90 Water Closet— A water flushed plumbing fixture designed to receive human excrement directly from the user of the fixture. The term is used sometimes to designate the room or compartment in which the fixture is placed.

2.91 Window — An opening to the outside other than a door, which provides all or part of the required natural light or ventilation or both to an interior space.

3 LAND USE CLASSIFICATION AND USES PERMITTED

3.1 Land Use Classification

The land use classification may be as indicated below:

Sl No.	*Level 1*					*Level 2*		
	N[1)]	A-N[2)]	Use Category	Colour Code[3), 4)]	Colour Code Description	N	A-N	Use Zone
(1)	(2)	(3)	(4)	(5)	(6)	(7)	(8)	(9)
i)	1	R	Residential		Yellow	11	R-1	Primary residential zone
						12	R-2	Unplanned/Informal residential zone
ii)	2	C	Commercial		Red	21	C-1	Retail shopping zone
						22	C-2	General business and commercial district centres
						23	C-3	Wholesale, godowns, warehousing/regulated markets
						24	C-4	Service sector
						25	C-5	Regulated/Informal/Weekly markets
iii)	3	I	Industry		Purple	31	I-1	Service and light industry
						32	I-2	Extensive and heavy industry
						33	I-3	Special industrial zone - Hazardous, noxious and chemical
iv)	4	PS	Public and semi-public		Dark blue	41	PS-1	Govt/Semi Govt/Public offices
						42	PS-2	Govt land (use undetermined)
						43	PS-3	Police headquarter/Station, police line
						44	PS-4	Educational and research
						45	PS-5	Medical and health
						46	PS-6	Social, cultural and religious (including cremation and burial grounds)
						47	PS-7	Utilities and services
v)	5	M	Mixed use		Light yellow background with vertical hatching in black	51	M-1	Mixed industrial use zone
						52	M-2	Mixed residential zone
						53	M-3	Mixed commercial zone
vi)	6	P	Recreational		Light green	61	P-1	Playgrounds/Stadium/Sports complex
						62	P-2	Parks and gardens – Public open spaces
						63	P-3	Multi-open space (*Maidan*)

(1)	(2)	(3)	(4)	(5)	(6)	(7)	(8)	(9)
vii)	7	T	Transportation and communication		Brown/Grey[5)]	71	T-1	Roads/Bus rapid transit system (BRTS)
						72	T-2	Railways/Mass rapid transit system (MRTS)
						73	T-3	Airport
						74	T-4	Seaports and dockyards
						75	T-5	Bus depots/Truck terminals and freight complexes
						76	T-6	Transmission and communication
viii)	8	A	Primary activity		Dark green	81	PA-1	Agriculture
						82	PA-2	Forest and horticulture
						83	PA-3	Poultry and dairy farming
						84	PA-4	Rural settlements
						85	PA-5	Brick kiln and extractive areas
						86	PA-6	Others (Fishing, pottery, etc)
ix)	9	E	Protective and undevelopable use zone		Light blue	91	E-1	Water bodies
						92	E-2	Special recreation zone/Protective areas, such as sanctuaries/reserve forests and eco-sensitive zone
						93	E-3	Undevelopable use zone
x)	10	S	Special area·		Pink	101	S-1	Old built-up (Core) area
						102	S-2	Heritage and conservation areas
						103	S-3	Scenic value areas
						104	S-4	Government restricted area (such as defence)
						105	S-5	Other uses/spot zone (*see* Note 5)

NOTES

1 Overall, there could be 43 use zones at the development plan level within 10 land use categories at the perspective plan level as given in the above table.

2 Areas of informal activities may be identified in the above land use categories at level 2 for 1 to 7 level 1 use zones only.

3 Mixed use zone shall be identified at the development plan level, having dominant use and mixed use.

4 Use permissions for different activities, as specified in the next section on simplified use zone regulations may be provided at the project/action plan level or with the approval of the Statutory Authority as the case may be.

5 The process of changing/relaxing/modifying land use of part or 'spot' of a 'zone' in a particular land use is termed as 'Spot Zoning'. Spot zoning may be done for comparatively smaller area in a particular land use zone in such a way that it does not affect the overall development plan.

6 Use zone regulations for the use permissibility (from the suggestive list) could be decided by the town planner depending upon the requirement/feasibility.

7 Appropriate code in terms of both numerical and alphabetic (letter) are provided to facilitate the reference and to have a simplified procedure to follow.

---

1) Numeric code.

2) Alpha-numeric code.

3) This colour code is for Level 1 land uses.

4) For subsequent levels of land uses different shades of Level 1 land use colour may be used along with relevant alpha-numeric code for clarity.

5) For transportation and communication facilities, brown colour, and for roads, grey colour may be used. If so decided by the planning agency, different shades of grey may be used for both roads and facilities.

3.2 The various building uses and occupancies (*see* **7**) permitted on the various zones shall be as given in the Master Plan of the town/city concerned.

3.3 Uses to be in Conformity with the Zone

Where the use of buildings or premises is not specifically designated on the Development/Master Plan or in the absence of Development Plan, shall be in conformity with the zone in which they fall.

3.4 Uses as Specifically Designated on Development/ Master Plan

Where the use of a site is specifically designated on the Development/Master Plan, it shall be used only for the purpose so designated.

3.5 Non-Conforming Uses

No plot shall be put to any use, occupancy or premises other than the uses identified in **3.1**, except with the prior approval of the Authority.

3.6 Fire Safety

Buildings shall be so planned, designed and constructed as to ensure fire safety and this shall be done as per Part 4 'Fire and Life Safety' of the Code.

3.7 Transferable Development Rights (TDR)

3.7.1 Transferable development rights (TDR) is a compensation, in the form of floor area ratio (FAR) or development right, which shall entitle the owner for construction of built-up area, as per applicable regulations, on designated sites. The FAR credit shall be issued, in a certificate called as development right certificate (DRC). The DRC is transferrable in full or part thereof.

3.7.2 *Development Right Certificate*

The development right certificate (DRC) shall be issued by the local body or the competent authority as per regulations and shall contain the following information:

a) Built-up area or FAR credit to which the owner is entitled;

b) Place and usage zone from which the DRC is generated (originating plot);

c) Place where the FAR credit shall be used (receiving plot); and

d) Details of development rights transferred and remaining.

3.7.3 *TDR Eligibility*

TDR may be granted for,

a) Lands earmarked for various public purposes including road widening, which are subjected to acquisition, and are proposed in the plan or regulations prepared under the applicable town planning/municipal or any other legislation;

b) Development or construction of the amenity on the reserved land;

c) Heritage structure or precinct under the provision of development control regulations or any other applicable regulations;

d) *In-lieu* of constructing housing for slum dwellers, slum redevelopment, disused mill sites, etc; and

e) Purposes as may be notified by the Government as per notification.

3.8 Accommodation Reservation (AR)

Accommodation reservation (AR) is a planning tool for development of public amenities reserved in a redevelopment plan wherein local authority is not required to acquire the land by incurring expenditure on payment of compensation. In case of AR, the owner of land earmarked as public amenity, in the redevelopment plan, shall be permitted to develop his land, using full permissible FAR on the plot, subject to handing over the built-up area for the proposed use to the local body/Authority, free of all encumbrances, in lieu of full permissible FAR granted to him. The area utilized for the amenity shall not form part of FAR calculation.

4 MEANS OF ACCESS

4.1 Every building/plot shall abut on a public/private means of access like streets/roads duly formed.

4.2 Every person who erects a building shall not at any time erect or cause or permit to erect any building which in any way encroaches upon or diminishes the area set apart as means of access required in the Code. No buildings shall be erected so as to deprive any other building of the means of access.

4.3 Width of Means of Access

The residential plots shall abut on a public means of access like street/road. Plots which do not abut on a street/road shall abut/front on a means of access, the width and other requirements of which shall be as given in Table 1.

Table 1 Width and Length of Means of Access

(*Clause* 4.3)

Sl No.	Width of Means of Access	Length of Means of Access *Max*
	m	m
(1)	(2)	(3)
i)	6.0	75
ii)	7.5	150
iii)	9.0	250
iv)	12.0	400
v)	18.0	1 000
vi)	24.0	above 1 000

NOTE — If the development is only on one side of the means of access, the prescribed widths may be reduced by 1m in each case.

In no case, development on plots shall be permitted unless it is accessible by a public street of width not less than 6 m.

4.3.1 *Other Buildings*

For all assembly buildings like, theatres, cinema houses, assembly halls, stadia; educational buildings; markets, hospitals; industrial buildings and other buildings which attract large crowd, the means of access shall not be less than the following:

Sl No.	*Width of Means of Access* m	*Length of Means of Access* m
i)	12.0	200
ii)	15.0	400
iii)	18.0	600
iv)	24.0	above 600

Further, in no case shall the means of access be lesser in width than the internal accessways in layouts and subdivision.

4.3.2 *Footpaths and Pathways*

4.3.2.1 *Footpaths*

4.3.2.1.1 Footpath should be normally designed for a pedestrian Level of Service (LOS) B. thereby providing wide pedestrian facilities for safe, pleasant and comfortable walking. Under resource constraint, LOS C may be adopted for deciding the width of footpath mentioned in Table 2. The width of footpaths depends upon the expected pedestrian traffic and may be fixed with the help of the following norms subject to not being less than 1.8 m.

Table 2 Capacity of Footpath and Design

(*Clause* 4.3.2.1.1)

Sl No.	Width of Foothpath	Design Flow in Number of Persons Per Hour			
		In Both Directions		All in One Direction	
	m	LOS B	LOS C	LOS B	LOS C
(1)	(2)	(3)	(4)	(5)	(6)
i)	1.8	1 350	1 890	2 025	2 835
ii)	2.0	1 800	2 520	2 700	3 780
iii)	2.5	2 250	3 150	3 375	4 725
iv)	3.0	2 700	3 780	4 050	5 670
v)	3.5	3 150	4 410	4 725	6 615
vi)	4.0	3 600	5 040	5 400	7 560

The land use adjacent to roads significantly influences generation of pedestrian traffic. Recommended width of footpath along various land uses are given in Table 3.

Table 3 Required Width of Footpath as per Adjacent Land Use

(*Clause* 4.3.2.1.1)

Sl No.	Description	Width m
(1)	(2)	(3)
i)	Minimum free walkway width and residential/mixed use areas	1.8
ii)	Commercial/Mixed use areas	2.5
iii)	Shopping frontages	3.5 to 4.5
iv)	Bus stops	3
v)	High intensity commercial areas	4

4.3.2.1.2 The footpath shall be level, non-slip and continuous, and shall be provided with tactile orientation, kerb and kerb ramp. The footpath shall comply with the requirements given in **B-2** other than for width which shall be as per **4.3.2.1.1**.

4.3.2.2 *Pathways*

The approach to the buildings from road/street/internal means of access shall be through paved pathway complying with requirements in **B-2**. The length of the pathway shall not be more than 30 m. The safety concern of cyclists and pedestrians should be addressed by encouraging the construction of segregated rights of way for bicycles and pedestrians.

4.3.2.2.1 In the case of special housing schemes for low income group and economically weaker section of society developed up to two storeyed row/cluster housing scheme. the main means of access through pedestrian pathway width shall be 3 m subject to provisions of **9.4.1**(a). The pedestrian pathway shall not serve more than 8 plots on each side of the pathway; the length of the pathway shall be not more than 60 m.

4.3.3 The length of the main means of access shall be determined by the distance from the farthest plot (building) to the public street. The length of the subsidiary accessway shall be measured from the point of its origin to the next wider road on which it meets.

4.3.4 In the interest of general development of an area, the Authority may require the means of access to be of larger width than that required under **4.3** and **4.3.1**.

4.3.5 In existing built-up areas in the case of plots facing street/means of access less than 4.5 m in width, the plot boundary shall be shifted to be away by 2.25 m from the central line of the street/means of accessway to give rise to a new street/means of accessway of 4.5 m width.

4.4 The means of access shall be levelled, metalled, flagged, paved, sewered, drained, channelled, lighted,

laid with water supply line and provided with trees for shade to the satisfaction of the Authority free of encroachment by any structure or fixture so as not to reduce its width below the minimum required under **4.3** and shall be maintained in a condition to the satisfaction of the Authority.

4.4.1 If any private street or any other means of access to a building is not levelled, metalled, flagged or paved, sewered, drained, channelled, lighted or laid with water supply line or provided with trees for shade to the satisfaction of the Authority, who may, with the sanction of the Authority, by written notice require the owner or owners of the several premises fronting or adjoining the said street or other means of access or abutting thereon or to which access is obtained through such street or other means of access or which shall benefit by works executed, to carry out any or more of the aforesaid requirements in such manner as he shall direct.

4.4.2 If any structure or fixture is set upon a means of access so as to reduce its width below the minimum required, the Authority may remove the same further and recover the expenses so incurred from the owner.

4.5 Access from Highways/Important Roads

No premises other than highway amenities like petrol pumps, motels, etc, shall have an access direct from highways and such other roads not less than 52 m in width, which the Authority with the approval of the highway authority shall specify from time to time. For all other buildings, the access to the plot from the highway shall be only through a service road/lane as per the stipulation of the highway authority. The Authority shall maintain a register of such roads which shall be open to public inspection at all times during office hours. The portion of such roads on which direct access may be permitted shall be as identified in the Development Plan. However, in the case of existing development on highways/other roads referred to above, the operation of this clause shall be exempted. These provisions shall, however, be subject to the provisions of the relevant State Highway Act, and *The National Highway Act*, 1956.

4.6 For high rise buildings and special buildings (*see* Part 4 'Fire and Life Safety' of the Code), the following additional provisions of means of access shall be ensured:

a) The width of the main street on which the building abuts shall not be less than 12 m and one end of this street shall join another street not less than 12 m in width.

b) The road shall not terminate in a dead end: except in the case of residential building, up to a height of 30 m.

c) The approach to the building and open spaces on all its sides shall be not less than 6 m in width, and a turning radius of minimum 9 m shall be provided for fire tender movement of fire tenders weighing up to 45 t. The same shall be hard surface capable of taking the mass of fire tender, weighing up to 45 t minimum. For heavier fire tenders, the minimum width, turning radius and the hard surface capable of taking the fire tender loads shall be as per the requirement laid down by the Fire Department. The layout for the open space for fire tender movement shall be done in consultation with the Chief Fire Officer of the city. which shall be kept free of obstructions and shall be motorable. The compulsory open spaces around the building shall not be used for parking.

d) The main entrance to the plot shall be of adequate width to allow easy access to the fire engine and in no case shall it measure less than 6 m. The entrance gate shall fold back against the compound wall of the premises, thus leaving the exterior accessway within the plot free for movement of fire tender. If the main entrance at the boundary wall is built over, the minimum clearance shall be 4.5 m.

4.6.1 *Buildings on Podium*

4.6.1.1 Podium is a horizontal projection (platform) extending beyond the building footprint on one or more sides, and may consist of one or more levels (*see* Fig. 8A).

4.6.1.2 *Uses permitted*

Podium may be used for the following purposes:

a) *Parking of vehicles* — When used for parking, one WC, two urinals and two washbasins for every 500 cars or part thereof, shall be provided on each podium floor. At least one accessible toilet complying with the requirements given in **B-9** shall be provided preferably near the accessible parking.

   Provision for driver's rest room for non-residential building shall be made.

b) Fire and building services/utilities in accordance with the provisions of other Parts/ Sections of the Code.

c) Topmost podium slab which is open to sky maybe landscaped and/or be used as recreational open space; subject to provision of 1.6 m high parapet wall.

d) Other habitable uses may be allowed by counting it in FAR subject to light, ventilation and fire safety requirements.

Uses proposed in (a) to (c), shall not be counted towards FAR.

4.6.1.3 *Requirements*

Following requirements shall be satisfied for buildings constructed on podium:

a) A podium may be permitted in a plot of area 1 500 m² or more.

b) A podium, if provided with ramp, may be permitted in one or more levels, however the total height shall not exceed 30.0 m above ground level.

c) In case a podium is not provided with ramp, but provided with car lift only, the same may also be permitted in one or more levels, however, the total height shall not exceed 9.0 m above ground level.

d) Requirements for ramp for vehicles (*see* Fig. 8B):

1) One way ramp of clear width of minimum 3.0 m and two way ramp with clear width of minimum 6.0 m shall be provided for LMV.

2) One way ramp of clear width of minimum 4.5 m and two way ramp with clear width of minimum 9.0 m shall be provided for LCV.

3) One way ramp of clear width of minimum 6.0 m and two way ramp with clear width of minimum 12.0 m shall be provided for HMV.

4) Ramp slope shall be maximum 1 in 8.

5) After a 40 m length of continuous ramp, a flat surface of minimum 6.0 m length shall preferably be provided (*see* Fig. 8B).

6) If podium is accessible to fire tender, minimum 7.5 m wide ramp shall be required for fire engine access with maximum slope of 1 in 10.

e) Podium shall not be permitted in required minimum front open space.

f) Podium, if accessible to fire tender, shall be so designed so as to take the load of fire tender weighing up to 45 t minimum or as per the requirement laid down by the Fire Department.

g) Requirement of accessibility for elders and persons with disabilities shall be ensured in compliance with the provisions of Annex B which may require providing ramps with specified gradient or accessible lifts for access to different levels.

4.6.1.4 *Requirements for fire tender movement*

a) Buildings having height more than 15 m above ground level shall necessarily be accessible by fire tender, as follows (*see* Fig. 9A):

1) For buildings having floor area less than 10 000 m², fire tenders shall have access to at least one-third of the perimeter of building which shall be minimum 6.0 m wide and having 9.0 m turning radius.

2) For buildings having floor area more than 10 000 m², fire engine shall have an access to at least to half of the perimeter of building which shall be minimum 6.0 m wide and having 9.0 m turning radius.

b) If podium is not accessible by fire tender, the podium may be such that it is not extended beyond the building footprint to an extent more than 11.0 m on the side where fire tender access is provided (*see* Fig. 9B and Fig. 9C). Such restriction shall not apply in case podium is accessible by fire engine (*see* Fig. 9D).

c) Minimum 6.0 m driveway width and 9.0 m width at turning shall be available for fire tender movement all around the podium.

NOTE — The width and turning radius of ramp for fire tender access, and requirements of motorable open space for fire tender movement given above pertain to fire tender weighing up to 45 t and its operability. For heavier fire tenders, these shall be as per the requirement laid down by the Fire Department [*see also* 4.6 (c)].

4.7 *Cul-de-sacs* giving access to plots and extending from 150 m to 275 m in length with an additional turning space at 150 m will be allowed only in residential areas, provided *cul-de-sacs* would be permissible only on straight roads and further provided the end of *cul-de-sacs* shall be higher in level than the level of the starting point of such dead end road. The turning space, in this case shall be not less than 81 m² in area, with no dimension less than 9 m.

4.8 Intersection of Roads

For intersection junctions of roads meeting at right angles as well as other than right angles, the rounding off or cut off or splay or similar treatment shall be done, to the approval of the Authority, depending upon the width of roads, the traffic generated, the sighting angle, etc, to provide clear sight distance.

4.9 The building line shall be set back at least 3 m from internal means of access in a layout of buildings in a plot subject to provisions of **8.2.1**.

5 COMMUNITY OPEN SPACES AND AMENITIES

5.1 Residential and Commercial Zones

In any layout or sub-division of land measuring 0.3 ha or more in residential and commercial zones, the community open spaces shall be reserved for recreational purposes which shall as far as possible

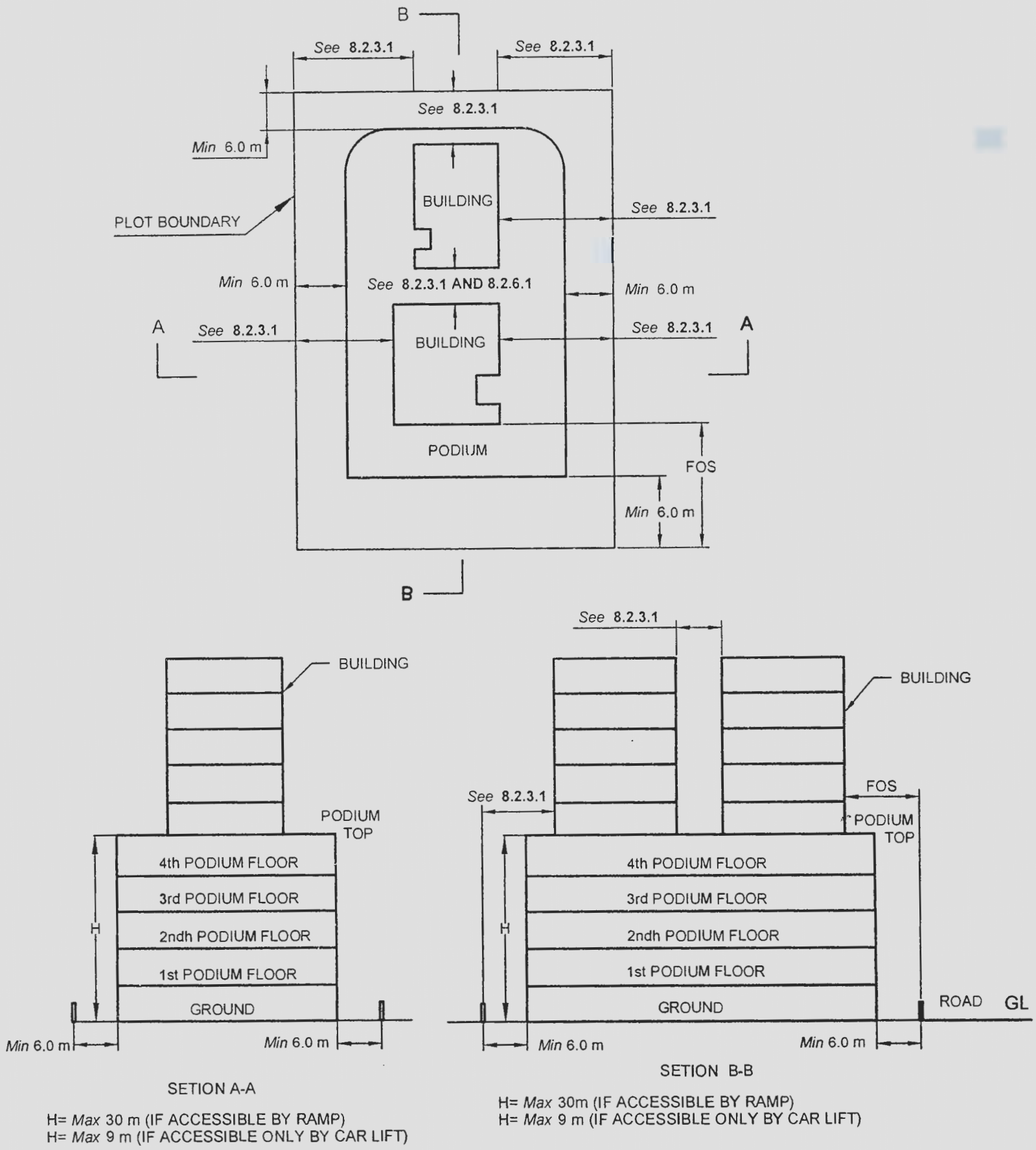

8A BUILDING ON PODIUM

FIG. 8 — (*Continued*)

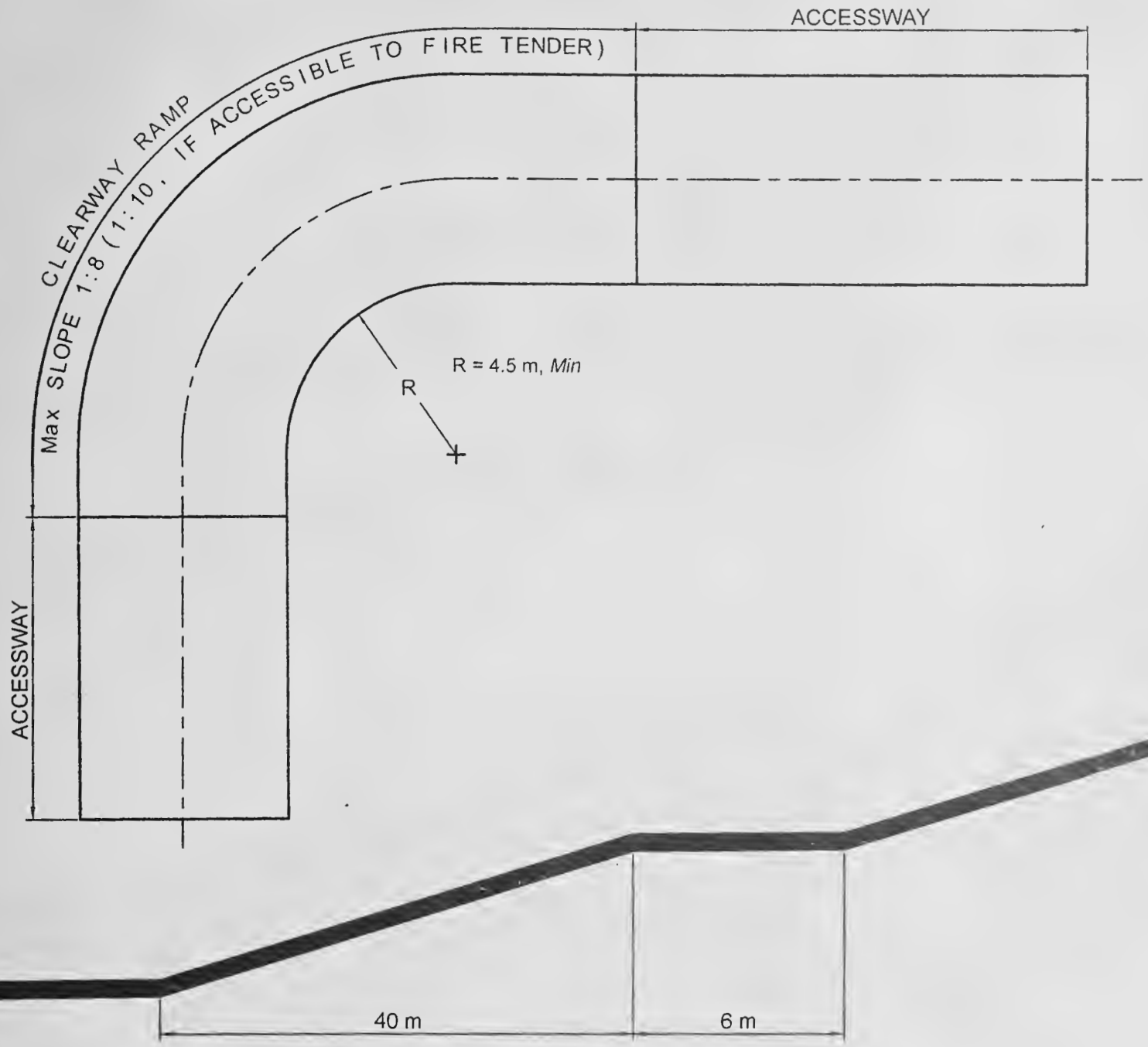

MAXIMUM CONTINUOUS RAMP LENGTH AND
MINIMUM LENGTH OF THE RAMP LANDING

MINIMUM CLEAR RAMP WIDTH, m

	ONE WAY	TWO WAY
LMV	3.0	6.0
LCV	4.5	9.0
HMV	6.0	12.0
FIRE TENDER	7.5	

8B RAMPS FOR PODIUM

FIG. 8 BUILDINGS ON PODIUM AND THEIR RAMPS

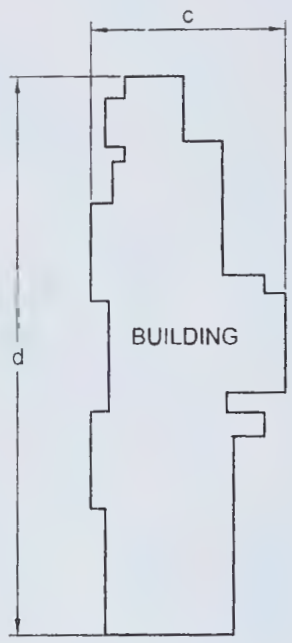

P = PERIMETER OF BUILDING = 2 (c + d)

MINIMUM FIRE TENDER ACCESS (X + Y + Z) :

a) FOR FLOOR AREA UP TO 10000 m² = $\frac{P}{3}$

b) FOR FLOOR AREA MORE THAN 10000 m² = $\frac{P}{2}$

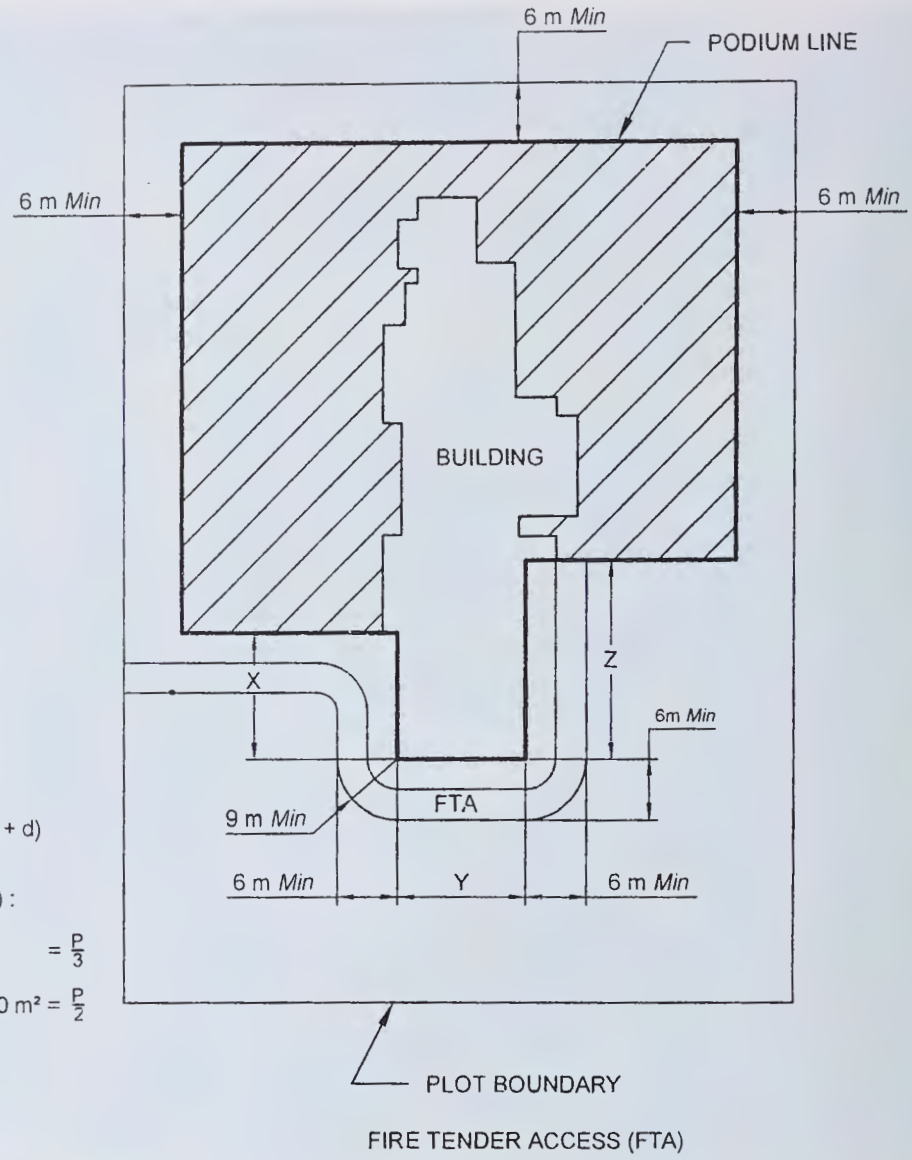

9A EMERGENCY VEHICLE ACCESS REQUIREMENT IN CASE PODIUM IS NOT ACCESSIBLE BY FIRE TENDER

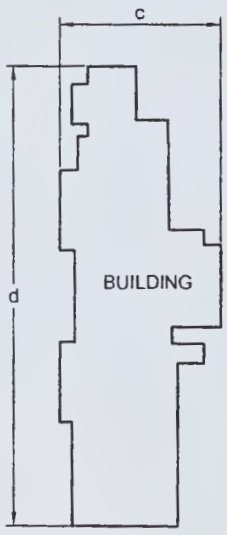

P = PERIMETER OF BUILDING = 2 (c + d)

MINIMUM FIRE TENDER ACCESS (X + Y + Z) :

a) FOR FLOOR AREA UP TO 10000 m² = $\frac{P}{3}$

b) FOR FLOOR AREA MORE THAN 10000 m² = $\frac{P}{2}$

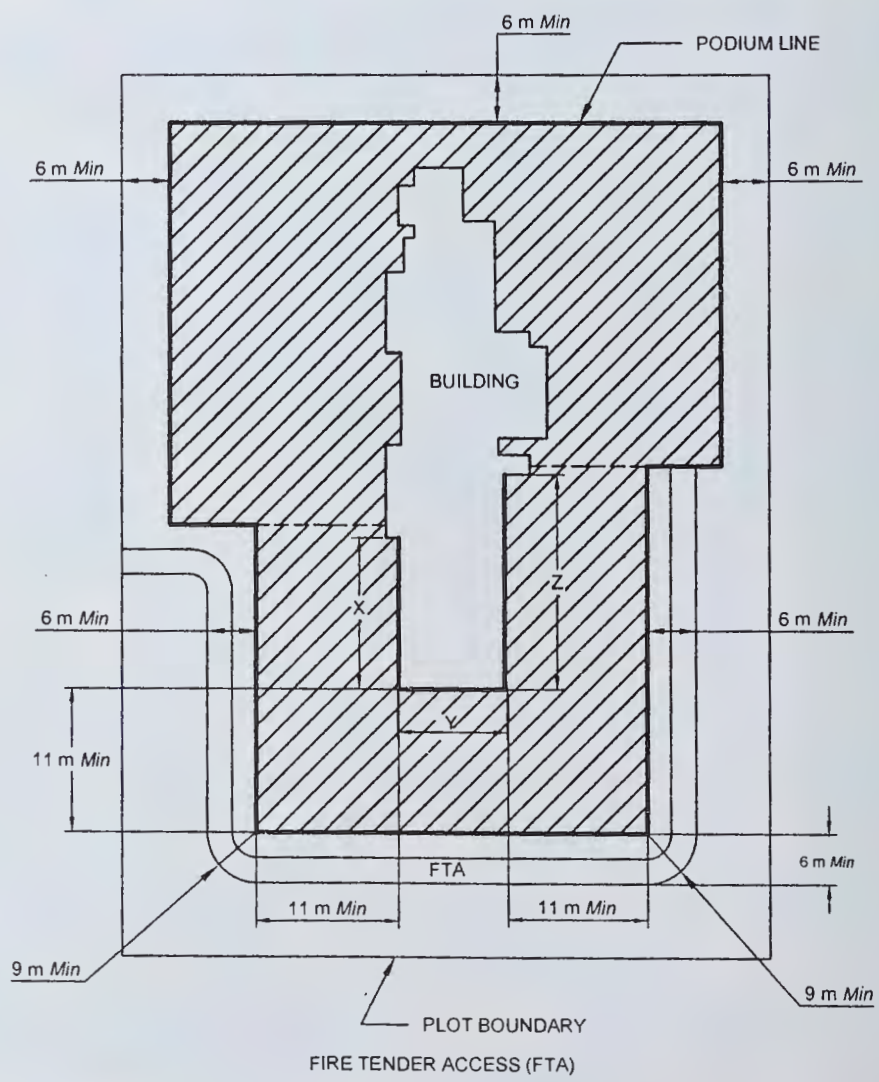

9B EXTENT OF PODIUM PROJECTION ALLOWED BEYOND BUILDING ON SIDE HAVING FIRE TNEDER ACCESS (IF PODIUM IS NOT ACCESSIBLE BY FIRE TENDER)

FIG. 9 — (*Continued*)

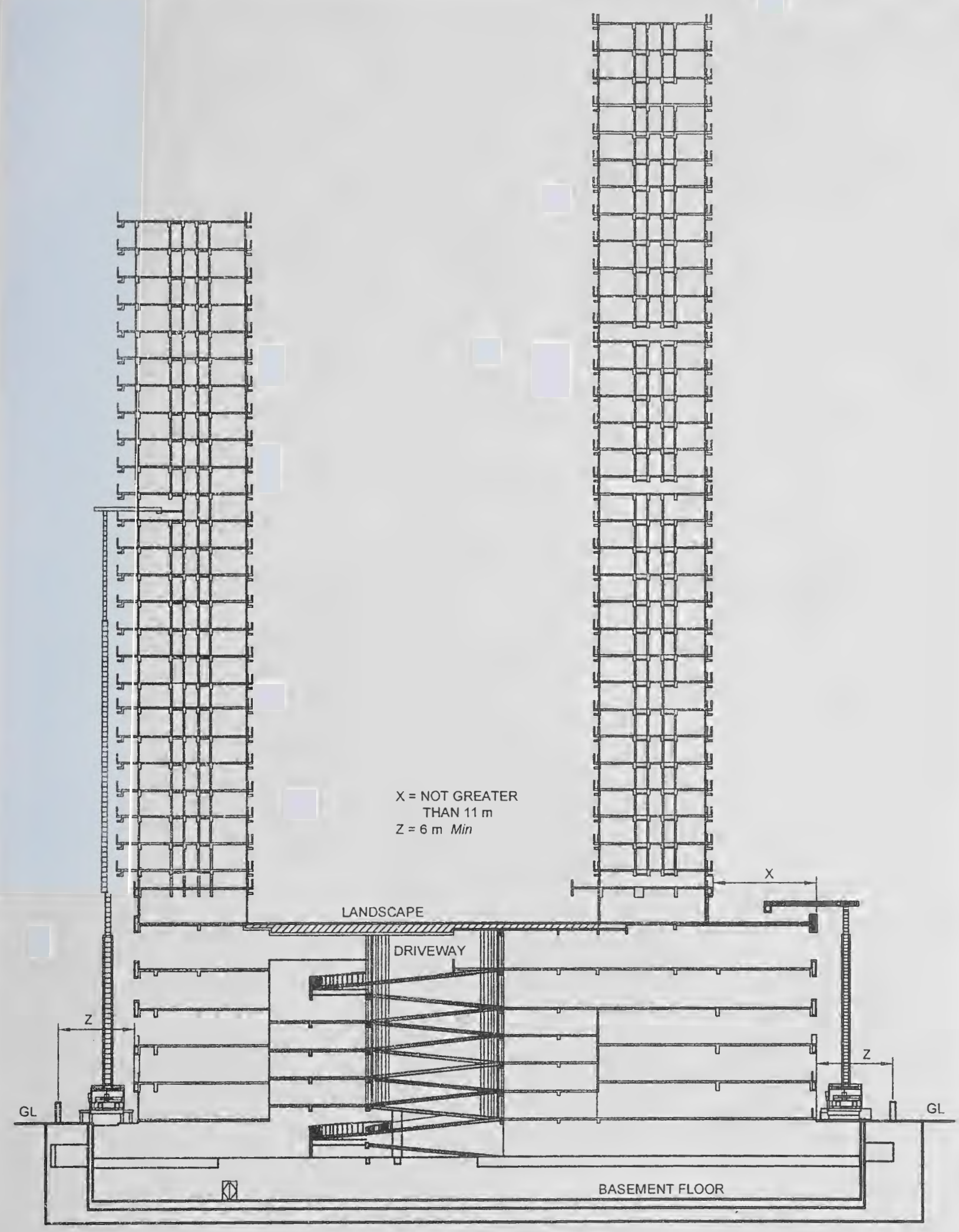

9C PODIUM PROJECTION IF PODIUM IS NOT ACCESSIBLE BY FIRE TENDER

FIG. 9 — (*Continued*)

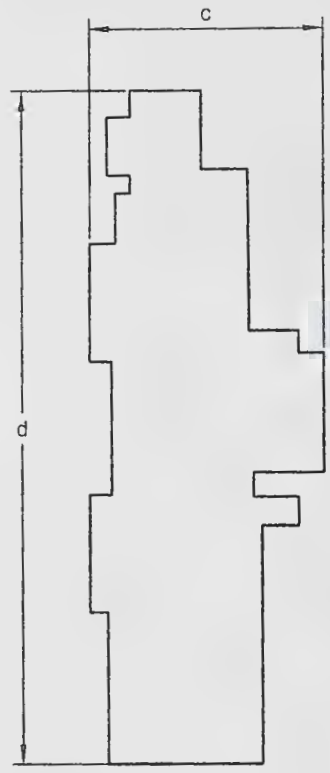

P = PERIMETER OF BUILDING = 2 (c + d)

MINIMUM FIRE TENDER ACCESS (X + Y + Z) :

a) FOR FLOOR AREA UP TO 10000 m² $= \frac{P}{3}$

b) FOR FLOOR AREA MORE THAN 10000 m² $= \frac{P}{2}$

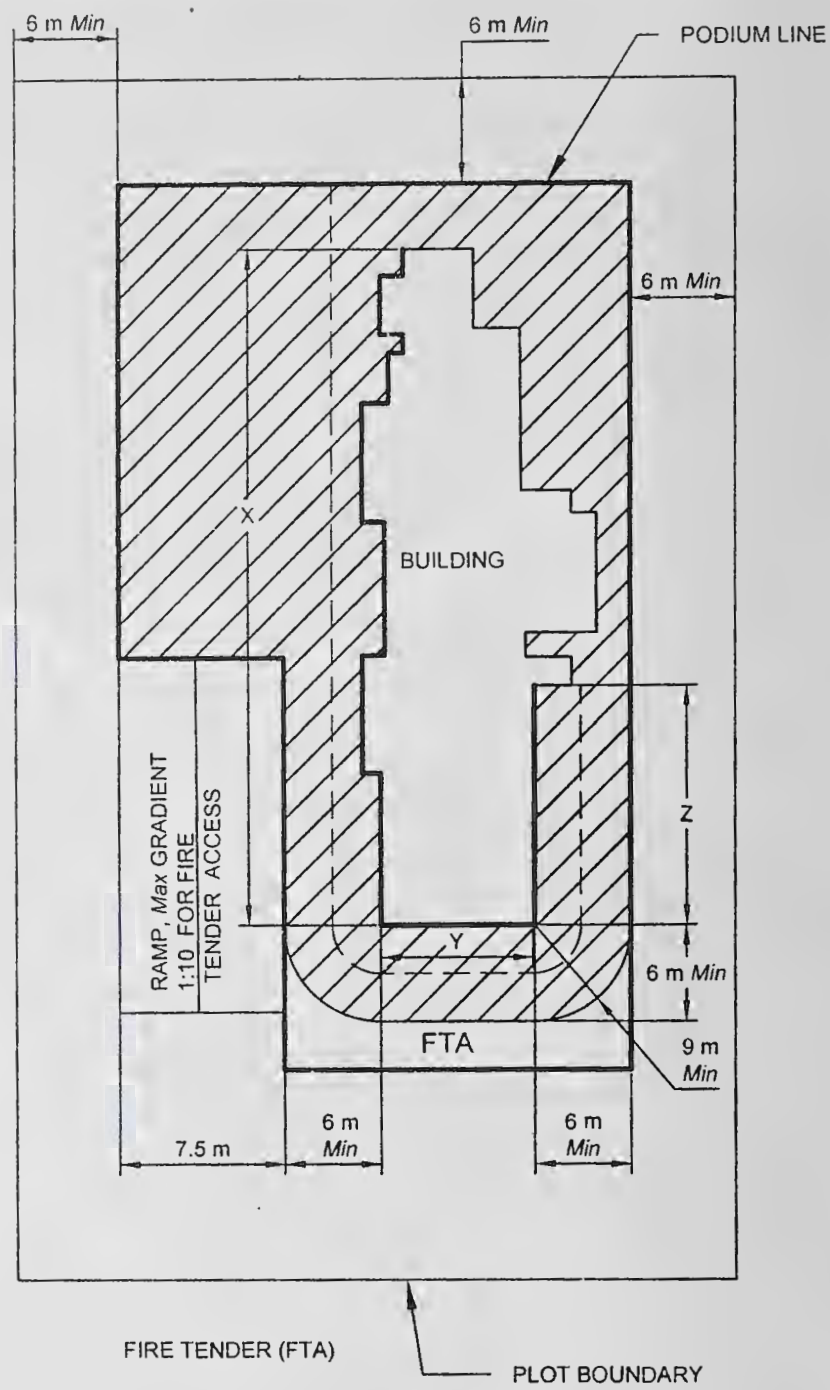

9D FIRE TENDER ACCESS REQUIREMENT IN CASE PODIUM IS ACCESSIBLE BY FIRE TENDER

FIG.9 REQUIREMENT FOR FIRE TENDER ACCESS

be provided in one place or planned out for the use of the community in clusters or pockets.

5.1.1 The community open spaces shall be provided catering to the needs of area of layout, population for which the layout is planned and the category of dwelling units. The following minimum provision shall be made:

a) 15 percent of the area of the layout, or

b) 0.3 to 0.4 ha/1 000 persons; for low income housing, the open spaces shall be 0.3 ha/1 000 persons.

5.2 No recreational space shall generally be less than 450 m².

5.2.1 The minimum average dimension of such recreational space shall be not less than 7.5 m; if the average width of such recreational space is less than 24 m, the length thereof shall not exceed 2.5 times the average width. However, depending on the configuration of the site, commonly open spaces of different shapes may be permitted by the Authority, as long as the open spaces provided serve the needs of the immediate community contiguous to the open spaces.

5.2.2 In such recreational spaces, a single storeyed structure as pavilion or gymnasia up to 25 m² in area may be permitted; such area may be excluded from FAR calculations.

5.3 Each recreational area and the structure on it shall have an independent means of access. Independent means of access may not be insisted upon if recreational space is approachable directly from every building in the layout. Further, the building line shall be at least 3 m away from the boundary of recreational open space.

5.4 Industrial Zones

In the case of sub-division of land in industrial zones of area 0.8 hectare or more, 5 percent of the total area shall be reserved as amenity open space which shall also serve as a general parking space; when such amenity open space exceeds 1 500 m^2, the excess area could be utilized for the construction of buildings for banks, canteens, welfare centers and such other common purposes considered necessary for the industrial user, as approved by the Authority.

5.4.1 In all industrial plots measuring 1 000 m^2 or more in area, 10 percent of the total area shall be provided as an amenity open space to a maximum of 2 500 m^2. Such an amenity open space shall have a means of access and shall be so located that it could be conveniently utilized as such by the persons working in the industry.

5.5 Other Amenities

In addition to community open spaces, the layouts shall provide for the amenities as given in **5.5.1** to **5.5.13**. These provisions may be modified based on specific requirements, as decided by the Authority.

5.5.1 *Educational Facilities*

	Land Area Required, Min
a) *Pre-Primary to secondary education*	
1) Pre-primary, nursery school — 1 for every 2 500 population	
i) Area per school	0.08 ha
ii) Location of pre-primary/nursery school	to be located near a park
2) Primary school (class 1 to 5) — 1 for every 5 000 population	
i) Strength of the school — 500 students	
ii) Area per school:	0.40 ha
a) School building area	0.20 ha
b) Play field area (with a minimum of 18 m × 36 m to be ensured for effective play)	0.20 ha (which is inclusive of the limited parking requirement for functional uses)
3) Senior secondary school (class 6 to 12) — 1 for every 7 500 population	
i) Strength of the school — 1 000 students	
ii) Area per school:	1.80 ha
a) School building area	0.60 ha
b) Play field area (with a minimum of 68 m × 126 m to be ensured for effective play)	1.00 ha
c) Parking area	0.20 ha
4) Integrated school without hostel facility (class 1 to 12) — 1 for every 90.000 to 100 000 population	
i) Strength of the school — 1 500 students	
ii) Area per school:	3.50 ha
a) School building area	0.70 ha
b) Play field area	2.50 ha
c) Parking	0.30 ha
iii) Location	To be located near a sport facility
5) Integrated school with hostel facilities (class 1 to 12) — 1 for every 90 000 to 100 000 population	
i) Strength of school — 1 500 students	
ii) Area per school:	3.90 ha
a) School building area	0.70 ha
b) Play field area	2.50 ha
c) Residential (including hostel area)	0.40 ha
d) Parking area	0.30 ha
iii) Location	To be located near a sport facility
6) School for children with disabilities (Class 1 to 12) — 1 for every 45 000 population	
i) Strength of the school — 400 students	
ii) Area per school:	0.70 ha
a) School building area	0.20 ha

b) Play field area	0.30 ha
c) Parking area	0.20 ha
iii) Location	To be located near a park or sport facility

NOTE — The schools should be inclusive providing education to all children including those with disabilities. However it may be required to have exclusive schools in case of certain disabilities, such as, speech, hearing, sight and multiple disabilities.

7) School for children with intellectual and developmental disabilities — 1 for every 1 000 000 population

i) Area per school	0.20 ha
ii) Location of pre-primary/nursery school	To be located near a park and non-noise polluting zone

The schools should preferably face service roads and roads with less traffic intensity.

b) *Higher education — General*

1) College — 1 for every 125 000 population

i) Strength of the college — 1 000 to 1 500 students	
ii) Area per college:	5.00 ha
a) College building area	1.80 ha
b) Play field area	2.50 ha
c) Residential (including hostel area)	0.40 ha
d) Parking area	0.30 ha

2) University campus

Area:	10.00 ha to 60.00 ha
i) Residential (if included) area	25 percent of total land area
ii) Sports and cultural activities	15 percent of total land area
iii) Parks and landscape including green belt	15 percent of total land area

c) *Technical education*

1) Technical education centre (A) — 1 for every 1 000 000 population to include 1 industrial training institute (ITI) and 1 polytechnic

i) Strength of ITI — 400 students	
ii) Strength of polytechnic — 500 students	
iii) Area per technical education centre:	4.00 ha
a) Area for ITI	1.60 ha
b) Area for polytechnic	2.40 ha

2) Technical education centre (B) — 1 for every 1 000 000 population to include 1 ITI, 1 technical centre and 1 coaching centre

Area per technical education centre:	4.00 ha
i) Area for ITI	1.60 ha
ii) Area for technical centre	2.10 ha
iii) Area for coaching centre	0.30 ha

d) *Professional education*

1) Engineering college — 1 for every 1 000 000 population

i) Strength of the college — 1 500 students	
ii) Area per college	6.00 ha

2) Medical college — 1 for every 1 000 000 population

Area of site including space for general hospital	15.00 ha

3) Nursing and paramedic institute — 1 for every 1 000 000 population

Plot area per institute (subject to Nursing Council of India/Ministry of Health Norms)	0.20 ha

4) Veterinary institute Area	As per Veterinary Council of India/ Ministry of Agriculture norms (subject to availability of land)

5) Other professional colleges — 1 for every 1 000 000 population
   i) Strength of the college — 250 to 1 500 students
   ii) Area of site:

a) for students strength up to 250 students	2.00 ha
b) additional area of site for every additional 100 students or part thereof up to total strength of 1 000 students	0.50 ha
c) for strength of college from 1 000 to 1 500 students	6.00 ha

5.5.2 *Health Care Facilities*

	Land Area Required, Min
a) *Dispensary — 1 for every 15 000 population* Area	0.08 ha to 0.12 ha
b) *Nursing home, child welfare and maternity centre — 1 for every 45 000 to 100 000 population* 1) Capacity — 25 to 30 beds 2) Area 0.20 ha to 0.30 ha	
c) *Poly-clinic with some observation beds — 1 for every 100 000 population)* Area	0.20 ha to 0.30 ha
d) *Intermediate hospital (category B) — 1 for every 100 000 population*	
1) Capacity — 80 beds (initially the provision may be for 50 beds including 20 maternity beds)	
2) Total area:	1.00 ha
i) Area for hospital	0.60 ha
ii) Area for residential accommodation	0.40 ha
e) *Intermediate hospital (category A) — 1 for every 100 000 population*	
1) Capacity — 200 beds (initially the provision may be for 100 beds)	
2) Total area:	3.70 ha
i) Area for hospital	2.70 ha
ii) Area for residential accommodation	1.00 ha
f) *General hospital — 1 for every 250 000 population*	
1) Capacity — 500 beds (initially the provision may be for 300 beds)	
2) Total area:	6.00 ha
i) Area for hospital	4.00 ha
ii) Area for residential accommodation	2.00 ha
g) *Multi-speciality hospital — 1 for 100 000 population*	
1) Capacity — 200 beds (initially the provision may be for 100 beds)	
2) Total area:	9.00 ha
i) Area for hospital	6.00 ha
ii) Area for residential accommodation	3.00 ha
h) *Speciality hospital — 1 for every 100 000 population*	
1) Capacity — 200 beds (initially the provision may be for 100 beds)	
2) Total area:	3.70 ha
i) Area for hospital	2.70 ha
ii) Area for residential accommodation	1.00 ha
j) *Family welfare centre — 1 for every 50 000 population* Area	500 m^2 to 800 m^2
k) *Diagnostic centre — 1 for every 50 000 population* Area	500 m^2 to 800 m^2

m) *Veterinary hospital for pets and animals — 1 for every 500 000 population*	
Area	0.20 ha
n) *Dispensary for pet animals and birds — 1 for every 100 000 population*	
Area	300 m^2
p) *Rehabilitation centres*	
Area	As per requirement

5.5.3 *Socio-Cultural Facilities*

	Land Area Required, Min
a) *Community room — 1 for every 5 000 population*	
Area	750 m^2
b) *Community hall, Mangal Karyalaya/Kalyana Mandapam/Barat Ghar/ library — 1 for every 15 000 population)*	
Area	2 000 m^2
c) *Recreational club — 1 for every 100 000 population*	
Area	10 000 m^2
d) *Music, dance and drama centre — 1 for every 100 000 population*	
Area	1 000 m^2
e) *Meditation and spiritual centre — 1 for every 100 000 population*	
Area	5 000 m^2
f) *Socio-cultural centre/Exhibition cum fair ground — 1 for every 1 000 000 population*	
Area	15.00 ha
g) *Anganwadi-housing area/cluster — 1 for every 5 000 population*	
Area	200 to 300 m^2
h) *Old age home — 1 for every 500 000 population*	
Area	1000 m^2 *Max*, subject to availability of land
j) *Religious facilities*	
1) At neighbourhood/housing cluster level — 1 for every 5 000 population	
Area	400 m^2
2) At sub-city level in urban extension — 1 for every 1 000 000 population	
Area	4.00 ha
k) *Science centre — 1 for every 1 000 000 population*	
Area	As per requirement
m) *International convention centre — 1 at city level*	
Area	As per requirement
n) *Other facilities*	
1) Orphanage/Children's centre (one each) — 1 for every 1 000 000 population	
Area	1 000 m^2 *Max*, subject to availability of land
2) Centre for support services for persons with disabilities — 1 for every 1 000 000 population	
Area	1 000 m^2 *Max*, subject to availability of land
3) Working women/men hostel — 1 for every 1 000 000 population	
Area	1 000 m^2 *Max*, subject to availability of land
4) Adult education centre — 1 for every 1 000 000 population	
Area	1 000 m^2 *Max*, subject to availability of land
5) Night shelter — 1 for every 1 000 000 population	
Area	1 000 m^2 *Max*, subject to availability of land

5.5.4 *Distribution Services*

	Land Area Required, Min
a) *Petrol/diesel filling and servicing centre* — May be permitted in central as well as sub-central business district, district centres, community centres (only filling station), residential and industrial use zones in urban areas, along the national highways, state highways, villages identified as growth centres, freight complex, proposed major roads and police/security force services (for captive use only).	
1) Location	
i) Shall not be located on the road having right of way less than 30 m.	
ii) Shall be approved by the explosive/fire department.	
iii) Special cases in old city areas may be considered based on the approval by statutory authorities.	
2) Area/Size	
i) Only filling station	30 m × 17 m
ii) Filling cum service station	36 m × 30 m
iii) Filing cum service station cum workshop	45 m × 36 m
iv) Filling station only for two and three wheelers	18 m × 15 m
b) *Compressed natural gas (CNG) filling centre* — Permitted in all use zones (except in regional parks and developed district parks) and along the national highways, state highways and villages identified as growth centres, freight complex and on proposed major roads.	
1) Location	
i) Shall not be located on the road having right of way less than 30 m.	
ii) Shall be approved by the explosive/fire department.	
2) Area/Size for CNG mother station (including building component — control rooms/office/dispensing room/store, pantry and W.C.)	1 080 m^2 (36 m × 30 m)
c) *LPG godowns/Gas godown — 1 for every 40 000 to 50 000 population* The major concern for its storage and distribution is the location which shall be away from the residential areas and shall have open spaces all around as per *The Explosive Rules*, 2008	
1) Capacity – 500 cylinders or 8 000 kg of LPG	
2) Area (inclusive of guard room)	520 m^2 (26 m × 20 m)
d) *Milk distribution booth — 1 milk booth for every 5 000 population*	
Area inclusive of service area	150 m^2
e) *Fruit and vegetable distribution booth — 1 booth for every 5 000 population*	
Area	250 m^2

5.5.5 *Police, Civil Defence and Home Guards*

	Land Area Required, Min
a) *Police station — 1 for every 90 000 population*	
Area (inclusive of essential residential accommodation; 0.05 ha additional to be provided for civil defence and home guards)	1.50 ha
b) *Police post — 1 for every 40 000 to 50 000 population (not served by a police station)*	
Area (inclusive of essential residential accommodation)	0.16 ha

c) *District office and battalion — 1 for every 1 000 000 population*	
Total area:	4.80 ha
1) Area for district office	0.80 ha
2) Area for battalion	4.00 ha
d) *Police line — 1 for every 2 000 000 population*	
Area	4.00 to 6.00 ha
e) *District jail — 1 for every 1 000 000 population*	
Area	10.00 ha
f) *Civil defence and home guards — 1 for every 1 000 000 population*	
Area	2.00 ha
g) *Traffic and police control room*	
Area	As per requirement
h) *Police training institute/college — 1 at city level*	
1) Location — To be located in fringe areas	
2) Area	5.00 ha
j) *Police firing range — 1 at city level*	
1) Location — To be located in fringe areas	
2) Area	Up to 10.00 ha
k) *Police camp including Central Police Organization/security forces (including Central security forces)*	
Area	Up to 10.00 ha
m) *Police booth (to be provided by transport planners)*	
1) Location — at major road intersections	
2) Area	10 to 12 m^2

5.5.6 *Safety Management*

	Land Area Required, Min
a) *Fire station — 1 for every 200 000 population or 1 within 5 to 7 km radius*	
Area inclusive of residential accommodation	1.00 ha
b) *Sub fire station/fire post — 1 within a radius of 3 to 4 km*	
Area inclusive of essential residential accommodation	0.6 ha
c) *Disaster management centre — 1 in each administrative zone*	
Area	1) 1.00 ha along with suitable open area 2) 2.00 ha if soft parking, temporary shelter, parade ground, etc, included
d) *Fire training institute/college*	
Area	3.0 ha

5.5.7 *Telephone, Postal and Banking Facilities*

	Land Area Required, Min
a) *Telephone and Communications*	
1) Telephone exchange of 40 000 lines — 1 for every 400 000 population	
Area	4.00 ha
2) Radio/TV station — 1 for every 500 000 to 800 000 population	
Area	1 700 m^2
3) Remote subscriber unit (RSU) — 1 for 3 km radius	
Area	300 m^2
b) *Postal*	
1) Post office counter without delivery — 1 for every 15 000 population	
Floor area to be provided in local shopping centre	85 m^2
2) Head post office with delivery office — 1 for 250 000 population	
Area	750 m^2
3) Head post office and administrative office — 1 for 500 000 population	
Area	2 500 m^2

c) *Banking*

1) *Bank with extension counters with ATM facility — 1 for every 15 000 population*

i) Floor area for counters	75 m^2
ii) Floor area for ATM	6 m^2

2) *Bank with locker, ATM and other banking facilities — 1 for 100 000 population*

Area	2 500 m^2

5.5.8 *Sports Facilities*

	Land Area Required, Min
a) *Divisional sports centre — 1 for 1 000 000 population*	
Area	20.00 ha
b) *District sports centre — 1 for 100 000 population*	
Area	8.00 ha
c) *Neighbourhood play area — 1 for 15 000 population*	
Area	1.50 ha
d) *Residential unit play area — 1 for 5 000 population*	
Area	5 000 m^2

5.5.9 *Commercial Centres*

	Land Area Required, Min
a) *Convenience shopping — 1 for every 5 000 population*	
Area	1 500 m^2
b) *Local shopping including service centre — 1 for every 15 000 population*	
Area	4 600 m^2
c) *Community centre with service centre — 1 for every 100 000 population*	
Area	5.00 ha
d) *District centre — 1 at district level/1 for every 500000 population*	
Area	40.00 ha
e) *Sub-city centre — 1 for every 2 500 000 to 5 000 000 population*	
Area	As per requirement
f) *City centre — 1 for every 5 000 000 plus population*	
Area	As per requirement
g) *Local wholesale market/Mandi — 1 for 1 000 000 population*	
Area	10.00 ha
h) *Weekly markets — 1 to 2 locations for every 100 000 population with 300 to 400 units per location*	
Parking and other open spaces with in the commercial centres can be so designed that weekly markets may operate in these areas during non-working hours.	
The area of informal sector should have suitable public conveniences and solid waste disposal arrangements.	
Area per location	0.40 ha
j) *Organized informal eating spaces — 1 for every 100 000 population*	
Area	2 000 m^2

5.5.10 *Electrical Sub-Station*

	Land Area Required, Min
a) *11 kV sub-station — 1 for 15 000 population*	
Area	500 m^2
b) *66 kV sub-station — 2 for 100 000 population*	
Area for each sub-station	6 000 m^2 (that is, 60 m × 100 m)
c) *220 kV sub-station — 1 for 500 000 population*	
Area	4.00 ha

5.5.11 *Transport*

	Land Area Required, Min
a) *Three wheeler and taxi stand — 1 for 15 000 population*	
Area	500 m^2
b) *Bus terminal — 1 for 100 000 population*	
Area	4 000 m^2
c) *Bus depot — 1 for 500 000 population*	
Area	2.00 ha

5.5.12 *Cremation/Burial Ground*

The site shall not be in proximity to residential areas and should preferably be in urban extension.

	Land Area Required, Min
a) *Electric crematorium — 1 for large size towns*	
Area	2.00 ha
b) *Cremation ground — 1 for 500 000 population*	
Area	2.50 ha
c) *Burial ground — 1 for 500 000 population*	
Area	4.00 ha

5.5.13 *Dhobi Ghat*

	Land Area Required, Min
Dhobi ghat with appropriate arrangements for water and drainage facilities and it shall be ensured that the water bodies are not polluted as a result of such activities 1 for 100 000 population	
Area	5 000 m^2

5.6 Every layout or subdivision shall take into account the provisions of development plan and if the land is affected by any reservation for public purposes, the Authority may agree to adjust the location of such reservations to suit the development.

6 REQUIREMENTS OF PLOTS

6.1 No building shall be constructed on any site, on any part of which there is deposited refuse, excreta or other offensive matter objectionable to the Authority, until such refuse has been removed therefrom and the site has been prepared or left in a manner suitable for building purposes to the satisfaction to the Authority.

6.2 Damp Sites

Wherever the dampness of a site or the nature of the soil renders such precautions necessary, the ground surface of the site between the walls of any building erected thereon shall be rendered damp-proof to the satisfaction of the Authority.

6.3 Surface Water Drains

Any land passage or other area within the curtilage of a building shall be effectively drained by surface water drains or other means.

6.3.1 The written approval of the Authority shall be obtained for connecting any subsoil or surface water drain to a sewer.

6.4 Distance from Electric Lines

An overhead line shall not cross an existing building as far as possible and no building shall be constructed under an existing overhead line. No accessible point from any *Verandah*, balcony, or the like shall be allowed to be erected or re-erected or any additions or alterations made to a building not having the following minimum clearances from an overhead electric supply line, in accordance with the current *Central Electricity Authority (Measures Relating to Safety and Electric Supply) Regulations*, 2010 as amended from time to time:

a) *Clearance of buildings from lines of voltages and service lines not exceeding 650 V*

1) An overhead line shall not cross over an existing building as far as possible and no building shall be constructed under an existing overhead line.

2) Where an overhead line of voltage not exceeding 650 V passes above or adjacent to or terminates on any building, the following minimum clearances from any accessible point, on the basis of maximum sag, shall be observed:

i) For any flat roof, open balcony, *Verandah* roof and lean-to-roof:

a) where the line passes above the building, a vertical clearance of 2.5 m from the highest point, and

b) when the line passes adjacent to the building, a horizontal clearance of 1.2 m from the nearest point, and

ii) For pitched roof:

a) where the line passes above the building, a vertical clearance of 2.5 m immediately under the line, and

b) when the line passes adjacent to the building, a horizontal clearance of 1.2 m.

3) The horizontal clearance shall be measured when the line is at a maximum deflection from the vertical due to wind pressure.

4) Any conductor so situated as to have a clearance less than that specified above shall be adequately insulated and shall be attached at suitable intervals to a bare earthed bearer wire having a breaking strength of not less than 350 kg.

b) *Clearances from buildings of lines of voltages exceeding 650 V*

1) An overhead line shall not cross over an existing building as far as possible and no building shall be constructed under an existing overhead line.

2) Where an overhead line of voltage exceeding 650 V passes above or adjacent to any building or part of a building, it shall have on the basis of maximum sag a vertical clearance above the highest part of the building immediately under such line, of not less than:

i) For lines of voltages exceeding 650 V	:	3.7 m upto and including 33 kV; and
ii) For lines of voltages exceeding 33 kV	:	3.7 m plus 0.30 m for every additional 33 kV or part thereof.

3) The horizontal clearance between the nearest conductor and any part of such building shall, on the basis of maximum deflection due to wind pressure, be not less than:

i) For lines of voltages exceeding 650 V and up to and including 11 kV	:	1.2 m
ii) For lines of voltages exceeding 11 kV and up to and including 33 kV	:	2.0 m
iii) For lines of voltages exceeding 33 kV	:	2.0 m plus 0.3 m for every additional 33 kV or part thereof

4) For high voltage direct current (HVDC) systems, vertical clearance and horizontal clearance, on the basis of maximum deflection due to wind pressure, from building shall be maintained as below:

Sl No.	*d.c. Voltage* kV	*Vertical Clearance* m	*Horizontal Clearance* m
(1)	(2)	(3)	(4)
i)	100	4.6	2.9
ii)	200	5.8	4.1
iii)	300	7.0	5.3
iv)	400	7.0	6.2
v)	500	9.1	7.4
vi)	600	10.3	8.6
vii)	800	12.4	10.7

6.5 Distance from Water Course/Area

Distance of site from the normal edge of water course/ area may be specified by the Authority, keeping in view the normal maximum flood/tide level.

6.6 Size of Plots

6.6.1 *Residential*

Each plot shall have a minimum size/frontage corresponding to the type of development as given below:

Sl No. (1)	*Type of Development* (2)	*Plot Size* m^2 (3)	*Frontage* m (4)
i)	Detached building	Above 250	above 12
ii)	Semi-detached building	125-250	8 to 12
iii)	Row type building	50-125	4.5 to 8

NOTE — For low income housing, *see* **14**.

6.6.1.1 The minimum size of the site for group housing development shall be as given in the Master Plan and local development control rules.

6.6.2 *Industrial*

The size of the plot shall not be less than 300 m^2 and its width shall not be less than 15 m.

6.6.3 *Other Land Uses*

The minimum size of plots for buildings for other uses not covered under **5.5** shall be as decided by the Authority. Various requirements with respect to cinema buildings shall be in accordance with the good practice [3(2)].

7 CLASSIFICATION OF BUILDINGS

Buildings are classified based on occupancy and types of construction.

7.1 For the purpose of the Code, the following shall be the occupancy classification and types of construction; for more detailed information, reference may be made to Part 4'Fire and Life Safety' of the Code.

7.1.1 *Occupancy Classification*

a) Residential;
b) Educational;
c) Institutional;
d) Assembly;
e) Business;
f) Mercantile (will include both retail and wholesale stores);
g) Industrial (will include low, moderate and high fire hazards);
h) Storage; and
j) Hazardous.

7.1.2 *Types of Construction*

a) Type 1,
b) Type 2,
c) Type 3, and
d) Type 4.

8 OPEN SPACES (WITHIN A PLOT)

8.1 General

Every room intended for human habitation shall abut on an interior or exterior open space or an open *Verandah* open to such interior or exterior open space.

8.1.1 The open spaces inside and around a building have essentially to cater for the lighting and ventilation requirements of the rooms abutting such open spaces, and in the case of buildings abutting on streets in the front, rear or sides, the open spaces provided shall be sufficient for the future widening of such streets.

8.1.2 *Open Spaces Separate for Each Building or Wing*

The open spaces shall be separate or distinct for each building and where a building has two or more wings, each wing shall have separate or distinct open spaces for the purposes of lighting and ventilation of the wings.

However, separation between accessory and main buildings more than 7 m in height shall not be less than 1.5 m; for buildings up to 7 m in height no such separation shall be required.

8.1.3 The open space shall be the minimum distance measured between the front, rear and side of the building and the respective plot boundaries. The front, rear and side of the building shall be the point of the building nearest to the boundary.

8.2 Residential Buildings

8.2.1 *Exterior Open Spaces*

The exterior open spaces for residential buildings up to a height of 10 m shall be in accordance with **8.2.1.1** to **8.2.1.3**.

8.2.1.1 *Front open space*

a) Every building fronting a street shall have a front space, forming an integral part of the site

as given below:

Sl No.	Front Open Space, Min m	Width of Street Fronting the Plot m
(1)	(2)	(3)
i)	1.5[1]	Up to 7.5[1]
ii)	3.0	7.5 to 18
iii)	4.5	18 to 30
iv)	6.0	Above 30

[1] For buildings up to a maximum height 7 m.

NOTE — In case a building abuts two or more streets, the value of open spaces is to be based on the average width of streets, subject to a minimum of 1.8 m for Sl No. (ii), (iii) and (iv).

b) For streets less than 7.5 m in width, the distance of the building (building line) shall be at least 5 m from the centre line of the street (*see* **4.3.5**).

NOTE — This limiting distance has to be determined by the Authority for individual road/street widths taking into account the traffic flow.

8.2.1.2 *Rear open space*

a) Every residential building shall have a rear open space, forming an integral part of the site, of an average width of 3.0 m and at no place measuring less than 1.8 m, except that in the case of a back-to-back sites, the width of the rear open space shall be 3.0 m throughout. Subject to the condition of free ventilation, the open space left up to half the width of the plot shall also be taken into account for calculating the average width of the rear open space. For plots of depths less than 9 m, for buildings up to 7 m in height, the rear open space may be reduced to 1.5 m.

b) *Rear open space to extend the rear wall* — The rear open space shall be co-extensive with the entire face of the rear wall. If a building abuts on two or more streets, such rear open space shall be provided throughout the face of the rear wall. Such rear wall shall be the wall on the opposite side of the face of the building abutting on the wider street unless the Authority directs otherwise.

c) In case of corner plots less than 300 m^2 in area, the rear open space should be 2.4 m minimum.

8.2.1.3 *Side open space*

a) Every semi-detached and detached building shall have a permanently open air space, forming an integral part of the site as given below:

1) For detached buildings there shall be a minimum side open space of 3.0 m on both the sides.

NOTE — For detached residential buildings up to 7 m in height on plots with a frontage less than 12 m (*see* **6.6.1**), one of the side open spaces may be reduced to 1.5 m.

2) For semi-detached buildings, there shall be a minimum side open space of 3.0 m on one side.

NOTE — For semi-detached buildings up to 7 m in height on plots with a frontage less than 9 m (*see* **6.6.1**), the side open spaces may be reduced to 1.5 m.

3) For row-type buildings, no side open is required.

b) In the case of semi-detached buildings, the open spaces provided on one side shall be as in **8.2.1.3** (a) (2) and all habitable rooms shall abut either on this side open space or front and rear open spaces or an interior open space (*see* **8.2.5**).

8.2.2 The provisions of **8.2.1.2** and **8.2.1.3** are not applicable to parking lock-up garages up to 3 m in height located at a distance of 7.5 m from any street line or front boundary of the plot.

8.2.3 The exterior open spaces for residential buildings of height above 10 m shall be in accordance with **8.2.3.1** and **8.2.3.2**.

8.2.3.1 For buildings of height above 10 m, the open spaces (side and rear) shall be as given in Table 4. The front open spaces for increasing heights of buildings shall be governed by **9.4.1**(a).

8.2.3.2 For tower-like structures, as an alternative to **8.2.3.1**, open spaces shall be as given below:

a) Up to a height of 24 m, with one set-back, the open spaces at the ground level, shall be not less than 6 m [*see* Fig. 10A];

b) For heights between 24 m and 37.5 m with one set-back, the open spaces at the ground level, shall be not less than 9 m [*see* Fig. 10B];

c) For heights between37.5 m and 70 m with two set-backs, the open spaces at the ground level, shall be not less than 12 m [*see* Fig. 10C];

d) For heights between 70 m and 120 m with two set-backs, the open spaces at the ground level, shall be not less than 14 m [*see* Fig. 10D];

e) For heights above 120 m and above with two set-backs, the open spaces at the ground level, shall be not less than 16 m [*see* Fig. 10E]; and

f) The deficiency in the open spaces shall be made good to satisfy **8.2.3.1** through the set-backs at the upper levels; these set-backs shall not be accessible from individual rooms/flats at these levels.

Table 4 Side and Rear Open Spaces for Different Heights of Buildings

(*Clause* 8.2.3.1)

Sl No.	Height of Building	Side and Rear Open Spaces to be Left Around Building
	m	m
(1)	(2)	(3)
i)	10	3
ii)	15	5
iii)	18	6
iv)	21	7
v)	24	8
vi)	27	9
vii)	30	10
viii)	35	11
ix)	40	12
x)	45	13
xi)	50	14
xii)	55	16
xiii)	70	17
xiv)	120	18
xv)	Above 120	20

NOTES

1 For buildings above 24 m in height, there shall be a minimum front open space of 6 m.

2 Where rooms do not derive light and ventilation from the exterior open space, the width of such exterior open space as given in col 3 may be reduced by 1 m subject to a minimum of 3 m and a maximum of 8 m. No further projections shall be permitted.

3 If the length or depth of the building exceeds 40 m, add to col (3) ten percent of length or depth of building minus 4.0 m subject to maximum requirement of 20 m.

8.2.4 The width of the abutting road and the front open space would govern the height of the building (*see* **9.4**).

8.2.5 *Interior Open Spaces*

a) *Inner courtyard* — In case the whole of one side of every room excepting bath, WC and store room, is not abutting on either the front, rear or side open spaces, it shall abut on an inner courtyard, whose minimum width shall be 3 m.

Further, the inner courtyard shall have an area, throughout its height, of not less than the square of one-fifth the height of the highest wall abutting the courtyard. Provided further that, when any room (excluding staircase bay, bathroom and water-closet) is dependent for its light and ventilation on an inner courtyard, the dimension shall be such as is required for each wing of the building.

Where only water-closet and bath room are abutting on the inner courtyard, the size of the inner courtyard shall be in line with the provision for ventilation shaft as given in **8.2.5** (b).

b) *Ventilation shaft* — For ventilating the spaces for water-closets and bath rooms, if not opening on to front, side, rear or interior open spaces, these shall open on to the ventilation shaft, the size of which shall not be less than the values given below:

Sl No.	*Height of Building*	*Size of Ventilation Shaft*	*Minimum One Dimension of the Shaft*
	m	m^2	m
(1)	(2)	(3)	(4)
i)	Up to 10	1.2	0.9
ii)	12	2.8	1.2
iii)	18	4.0	1.5
iv)	24	5.4	1.8
v)	30	8.0	2.4
vi)	Above 30	9.0	3.0

NOTES

1 For buildings of height above 30 m, a mechanical ventilation system shall be installed besides the provision of minimum ventilation shaft.

2 For fully air conditioned residential/business buildings, the ventilation shaft need not be insisted upon, provided the air conditioning system works in an uninterrupted manner, also, provided there is an alternative source of power supply.

c) *Outer courtyard* — The minimum width of the outer courtyard (as distinguished from its depth) shall be not less than 2.4 m. If the width of the outer courtyard is less than 2.4 m, it shall be treated as a notch and the provisions of outer courtyard shall not apply. However, if the depth of the outer courtyard is more than the width, the provisions of **8.1.2** shall apply for the open spaces to be left between the wings when any habitable room depends on light and ventilation from such outer courtyard.

d) *Sunken courtyard* — Sunken courtyard up to 3 m in depth from the ground level as 'light well' within building envelope shall be permitted for light and ventilation for basement area, provided all concerns relating to drainage are taken care of.

8.2.6 *Joint Open Air Space*

Every such interior or exterior open air space, unless the latter is a street, shall be maintained for the benefit of such building exclusively and shall be entirely within the owner's own premises.

8.2.6.1 If such interior or exterior open air space is intended to be used for the benefit of more than one building belonging to the same owner, the width of such open air space shall be the one specified for the tallest building as specified in **8.2.3** abutting on such open air space [*see* Fig. 8A].

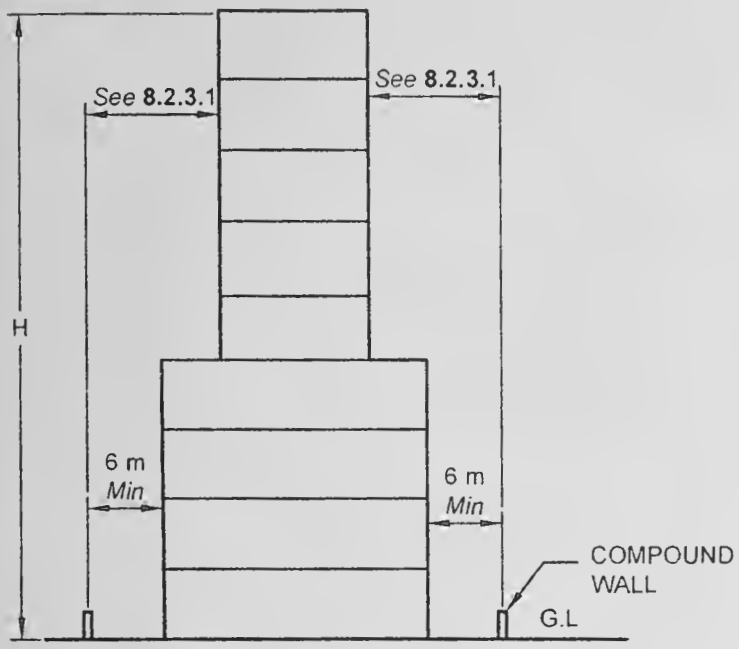

10A FOR BUILDINGS HEIGHT (H) UP TO 24 m

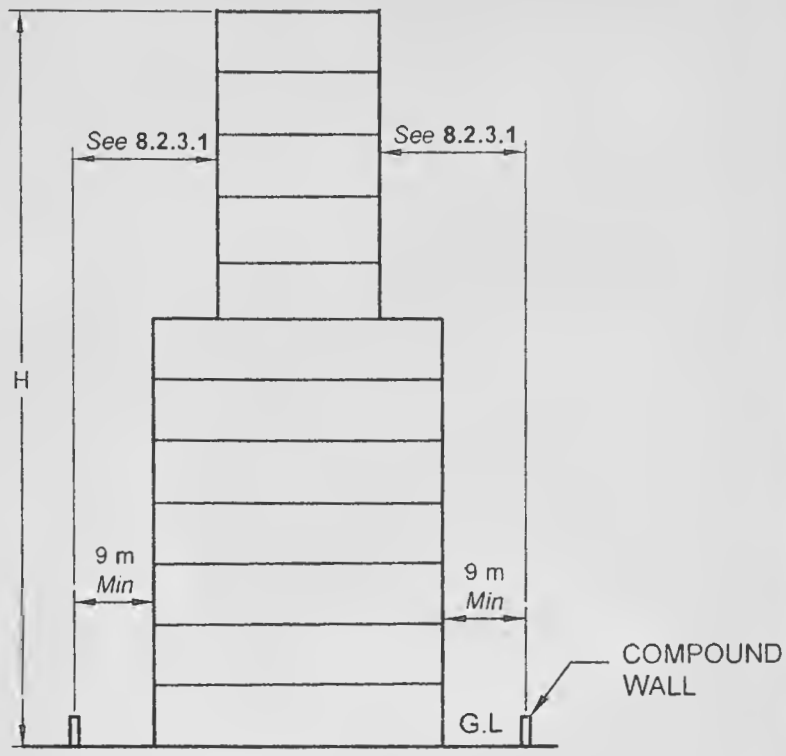

10B FOR BUILDINGS HEIGHT (H) BETWEEN 24 m AND 37.5 m

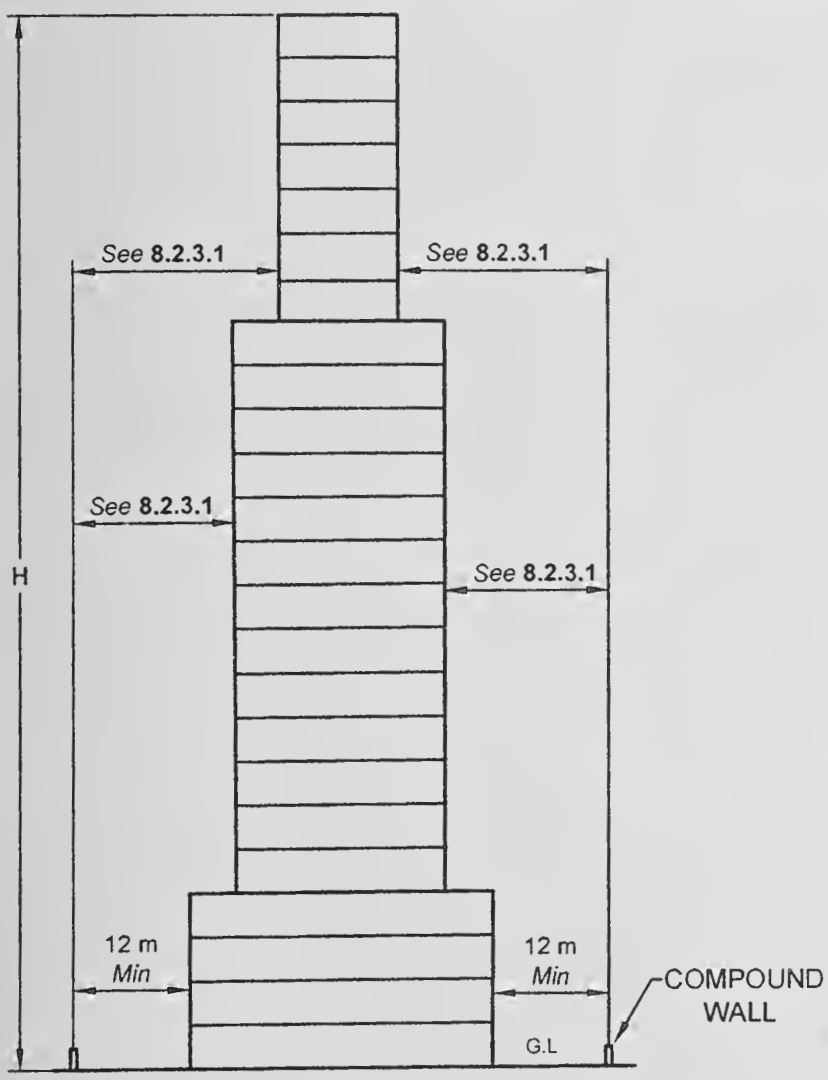

10C FOR BUILDINGS HEIGHT (H) BETWEEN 37.5 m AND 70 m

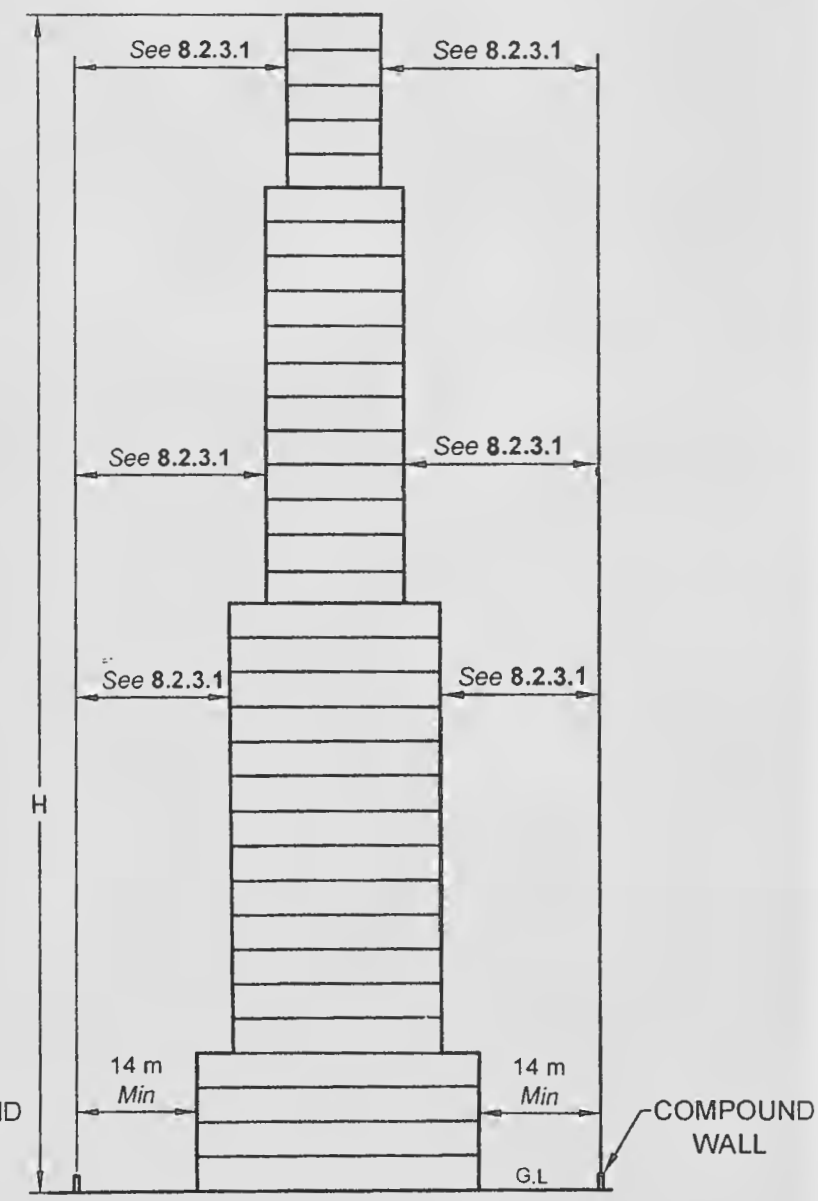

10D FOR BUILDINGS HEIGHT (H) BETWEEN 70 m AND 120 m

FIG. 10 — (*Continued*)

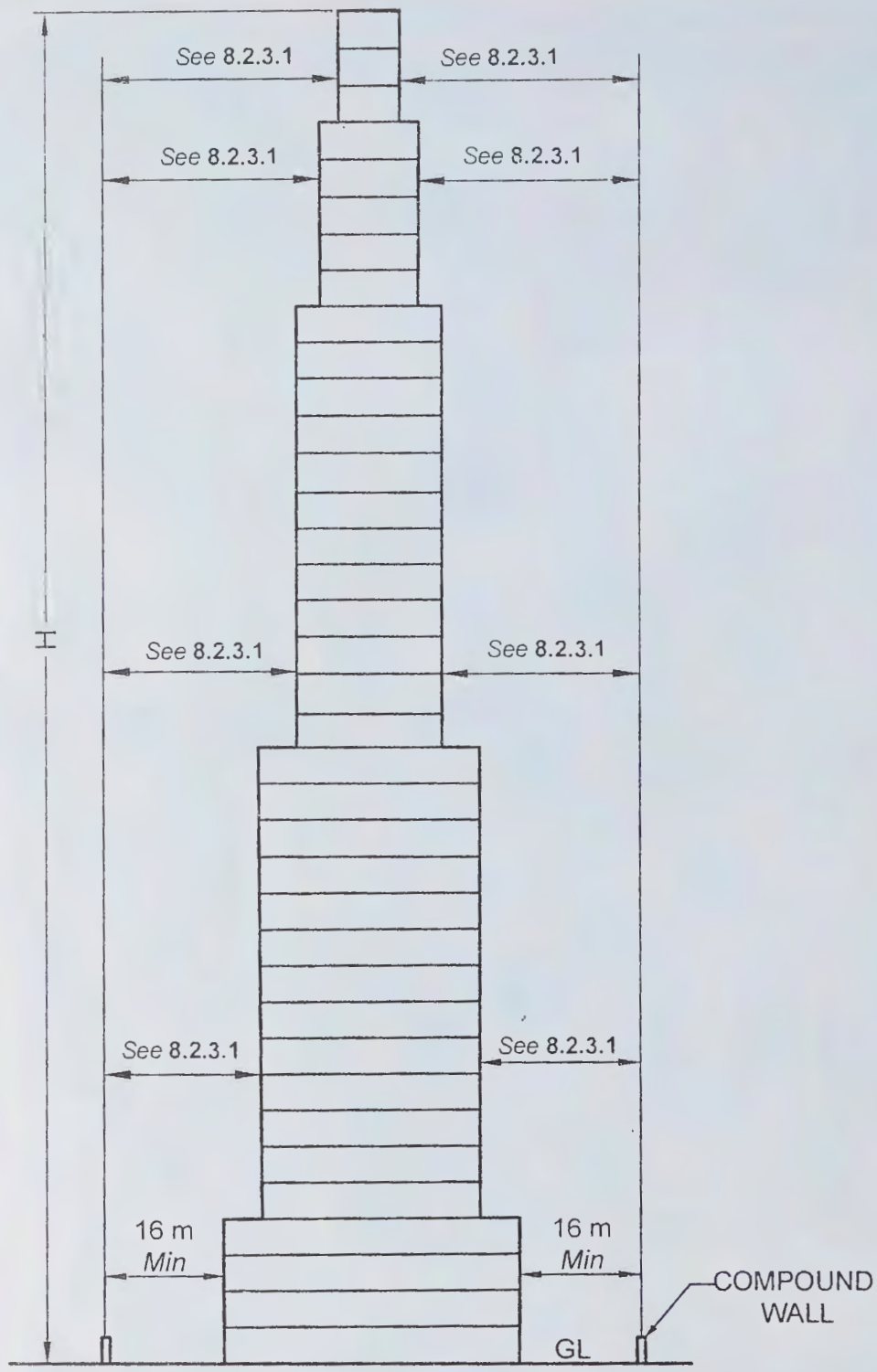

10E FOR BUILDINGS HEIGHT (H) ABOVE 120 m

FIG. 10 OPEN SPACES AROUND TOWER-LIKE STRUCTURES

8.2.6.2 If such interior or exterior open air space is jointly owned by more than one person, its width shall also be as specified in **8.2**, provided every such person agrees in writing to allow his portion of such joint open air space to be used for the benefit of every building abutting on such joint open air space and provided he sends such written consent to the Authority for record. Such common open air space shall thenceforth be treated as a permanently open air space required for the purposes of the Code. No boundary wall between such joint open air space shall be erected or raised to a height of more than 2.0 m.

8.3 Other Occupancies

8.3.1 Open spaces for other occupancies shall be as given below:

a) *Educational buildings* — Except for nursery schools, the open spaces around the building shall be not less than 6 m.

b) *Institutional buildings* — The open spaces around the building shall be not less than 6 m.

c) *Assembly buildings* — The open space at front shall be not less than 12 m and the other open spaces around the building shall be not less than 6 m.

NOTE — However, if assembly buildings are permitted in purely residential zones, the open spaces around the building shall be not less than 12 m.

d) *Business, mercantile and storage buildings* — The open spaces around the building shall be not less than 4.5 m for heights up to 16 m, with an increase of the open spaces of 0.25 m for every increase of 1 m or fraction thereof in height above 16 m. Where these occur in a purely residential zone or in a residential with incidental shops line zone the open spaces may be relaxed.

e) *Industrial buildings* — The open spaces around the building shall be not less than 4.5 m for heights up to 16 m, with an increase of the open spaces of 0.25 m for every increase of 1 m or fraction thereof in height above 16 m.

NOTE — Special rules for narrow industrial plots in the city, namely plots less than 15 m in width, and with appropriate set-backs from certain streets and highways, shall be applicable.

f) *Hazardous occupancies* — The open spaces around the building shall be as specified for industrial buildings [*see* **8.3.1**(e)].

8.4 Exemption to Open Spaces

8.4.1 *Projections into Open Spaces*

Every open space provided either interior or exterior shall be kept free from any erection thereon and shall be open to the sky, except as given below:

a) Cornice, roof or weather shade not more than 0.75 m wide;

b) Sunshades over windows/ventilators or other openings not more than 0.75 m wide;

c) Canopy not to be used as a sit out with clearance of 1.5 m between the plot boundary and the canopy;

d) Projected balcony at higher floors of width not more than 1.2 m; and

e) Projecting rooms/balconies [*see* **8.4.1**(d)] at alternate floors such that rooms of the lower two floors get light and air and the projection being not more than the height of the storey immediately below.

However, these projections into open spaces shall not reduce the minimum required open spaces.

8.4.1.1 *Accessory building*

The following accessory buildings may be permitted in the open spaces:

a) In an existing building, sanitary block of 2.4 m in height subject to a maximum of 4 m2 in the rear open space at a distance of 1.5 m from the rear boundary may be permitted, where facilities are not adequate.

b) Parking lock up garages not exceeding 2.4 m in height shall be permitted in the side or rear open spaces at a distance of 7.5 m from any road line or the front boundary of the plot; and

c) Suction tank and pump room each up to 2.5 m^2 in area.

8.4.2 *Projection into Street*

8.4.2.1 In existing built-up or congested areas, no projection of any sort whatsoever, except sunshades (*see* **8.4.2.3**) extending more than 230 mm below a height of 4.3 m, shall project over the road or over any drain or over any portion outside the boundaries of the site, provided the projection arising out of the vertical part of the rain-water spouts projecting at the road level or the water pipe may be permitted in accordance with the drainage plan.

8.4.2.2 *Porticos in existing developed area*

Porticos in bazaar areas of existing developed areas may be permitted to project on road land subject to the following limitations:

a) Porticos may be allowed on such roads leaving a minimum clear space of 18 m between kerbs;

b) The porticos shall not be less than 3 m wide;

c) Nothing shall be allowed to be constructed on the portico which shall be used as an open terrace;

d) Nothing shall be allowed to project beyond the line of arcades; and

e) The space under the portico shall be paved and channeled according to the directions of the Authority.

8.4.2.3 *Sunshades over windows and ventilators*

Projections of sunshades over windows or ventilators in existing built-up or congested areas when permitted by the Authority shall fulfill the following conditions:

a) No sunshade shall be permitted over the road or over any drain or over any portion outside the boundaries of the site below a height of 2.8 m from the road level;

b) Sunshades provided above a height of 2.8 m from the ground level shall be permitted to project up to a maximum width of 60 cm, if the road over which they project exceeds 9 m in width; and

c) No sunshade shall be permitted on roads less than 9 m in width or on roads having no footpaths.

8.5 Limitations to Open Spaces

8.5.1 *Safeguard Against Reduction of Open Space*

No construction work on a building shall be allowed if

such work operates to reduce an open air space of any other adjoining building, belonging to the same owner to an extent less than what is prescribed at the time of the proposed work or to reduce further such open space if it is already less than that prescribed.

8.5.2 *Additions or Extensions to a Building*

Additions or extensions to a building shall be allowed, provided the open spaces for the additions/extensions satisfy **8.2** after such additions/extensions are made.

8.6 In case of buildings on podium, the requirements for spaces shall also comply with **4.6.1.3** [*see also* Fig. 8(a)].

9 AREA AND HEIGHT LIMITATIONS

9.1 General

The limitation of area and height of buildings of different occupancy classes and types of construction shall be achieved by specifying it in terms of FAR, which shall take into account the various aspects that govern in specifying FAR as given below:

a) Occupancy class;
b) Types of construction;
c) Width of street fronting the building and the traffic load;
d) Locality where the building is proposed and the density;
e) Parking facilities;
f) Local fire fighting facilities; and
g) Water supply, drainage and sanitation facilities.

9.2 The comparative FARs for different occupancies and types of construction are as given in Table 5 and the Authority shall select a basic FAR for one occupancy and a type of construction and arrive at the FAR values for other combinations taking into account the other local factors (*see* **9.1**).

9.2.1 *Unlimited Areas*

The minimum fire separation on all sides of buildings of unlimited areas (*see* Table 5) and of Type 1 construction shall be 9 m.

9.3 Street Width

The area limits shall apply to all buildings fronting on a street or public space not less than 9 m in width accessible to a public street.

9.4 Height Limit

The height and number of storeys shall be related to FAR and the provisions of **8**.

9.4.1 Where a building height is not covered by Table 5, the maximum height shall be limited according to the width of the street as follows:

a) The maximum height of building shall not exceed 1.5 times the width of road abutting plus the front open space, subject to the requirement of front open space of a maximum of 16 m;
b) If a building abuts on two or more streets of different widths, the building shall be deemed to face upon the street that has the greater width and the height of the building shall be regulated by the width of that street and may be continued to this height to a depth of 24 m along the narrower street subject to conformity of **8**; and
c) For buildings in vicinity of aerodromes, provisions of **9.5** shall apply.

9.4.2 *Height Exceptions*

9.4.2.1 *Roof structures*

The following appurtenant structures shall not be included in the height of the building unless the aggregate area of such structures, including pent-houses, exceeds one-third of the area of the roof of building upon which they are erected:

a) Roof tanks and their supports (with support height not exceeding 1 m);
b) Ventilating, air conditioning, lift rooms and similar service equipment;
c) Stair cover (*Mumty*) not exceeding 3 m in height; and
d) Chimneys, parapet walls and architectural features not exceeding 1.2 m in height.

9.4.2.2 The building height for different occupancy types shall not exceed the maximum height prescribed in Part 4 'Fire and Life Safety' of the Code.

9.5 Restrictions in the Vicinity of Aerodromes

9.5.1 For buildings in the vicinity of aerodromes, the maximum height of such buildings shall be decided in consultation with the Airports Authority of India who shall be responsible for issuing the no objection certificate. This shall be in accordance with the concerned notification of the Ministry of Civil Aviation, Govt of India.

9.5.1.1 For the purpose of **9.5.1**, new buildings and structures coming up in the vicinity of an aerodrome shall be subjected to height restrictions in accordance with the subject notification.

No building or structure higher than the height specified in the subject notification shall be constructed or erected and no tree which is likely to grow or ordinarily grows

Table 5 Comparative Floor Area Ratios for Occupancies Facing One Public Street of at least 9 m Width

(*Foreword*, *Clauses* 2.26, 9.2 *and* 9.2.1)

Sl No.	Occupancy Classification	Type of Construction			
		Type 1	Type 2	Type 3	Type 4
(1)	(2)	(3)	(4)	(5)	(6)
i)	Residential	UI	2.0	1.4	1.0
ii)	Educational	UL	2.0	1.4	1.0
iii)	Institutional	UL	1.5	1.0	0.8
iv)	Assembly	UL	1.0	0.7	0.5
v)	Business	UL	2.9	2.3	1.6
vi)	Mercantile	8.0	1.8	1.4	1.0
vii)	Industrial	7.5	1.9	1.6	1.3
viii)	Storage (*see* Note 4)	6.0	1.5	1.3	1.0
ix)	Hazardous (*see* Note 4)	2.8	1.1	0.9	NP

UL – Unlimited.

NP – Not Permitted.

NOTES

1 This table has been prepared, taking into account the combustible content in the different occupancies as well as the fire resistance offered by the type of construction (*see* Part 4 'Fire and Life Safety' of the Code).

2 This table shall be modified by the Authority, taking into account the other aspects as given below (*see* **9.1**):

a) Density in terms of dwelling units/hectare;
b) Traffic considerations;
c) Parking spaces;
d) Local fire fighting facilities; and
e) Water supply, drainage and sanitation requirements.

3 The FAR specified may be increased by 20 percent for the following:

a) A basement or cellar and space under a building constructed on stilts and used as a parking space, and air conditioning plant room used as accessory to the principal use;
b) Electric cabin or substation watchman's booth of maximum size of 1.6 m^2 with minimum width or diameter of 1.2 m, pump house, garbage shaft, space required for location of fire hydrants, electric fittings and water tank;
c) Projections and accessory buildings as specifically exempted (*see* **8.4.1**); and
d) Staircase room and lift rooms above the topmost storey, architectural features; and chimneys and elevated tanks of dimensions as permissible under the Code; the area of the lift shaft shall be taken only on one floor.

4 In so far as single storey storage and hazardous occupancies are concerned, they would be further governed by volume to plot area ratio (VPR), to be decided by the Authority.

higher than the height specified in the subject notification shall be planted on any land within the specified radius from the aerodrome reference point, as given in the notification.

9.5.1.2 In the case of buildings or structures to be erected in the vicinity of defence aerodromes, the maximum height of such buildings shall be decided by the Defence Authority.

9.5.2 The location of slaughter house/butcher house and other areas for activities like depositing of garbage dumps which would attract high flying birds like eagles/ hawks, etc, shall not be permitted within a radius of 10 km from aerodrome reference point.

9.6 Group Housing

9.6.1 Group housing development may be in low rise house clusters or high rise multi-storeyed apartments for high density development.

9.6.2 No limit to floors and height shall be applicable, but the coverage and floor area ratio for various densities may be as given in Table 6 unless provided otherwise in the Master Plan and local development control rules.

9.6.3 The minimum size of the site for group housing multi-storeyed apartment shall be 3 000 m^2.

9.6.3.1 The number of dwelling units are calculated on the basis of the density pattern given in the Development Plan taking into consideration a population of 4.5 persons per dwelling unit.

9.6.3.2 The basement may vary between 33.33 and 50 percent of the plot area and is to be used for parking, servicing and for essential household storage without counting in FAR.

9.6.3.3 Parking space shall be provided in accordance with **10**. Designated accessible parking spaces shall be provided in accordance with **B-3**.

9.6.4 With a view to providing adequate parking for occupancies and the vehicular load, appropriate off-street parking provisions have to be made in the

Table 6 Floor Area Ratio and Coverage for Group Housing

(*Clause* 9.6.2)

Sl No.	Net Residential Density Dwelling Units/Hectare	Maximum Coverage Percent	Floor Area Ratio
(1)	(2)	(3)	(4)
i)	25	25	0.50
ii)	50	30	0.75
iii)	75	33	0.90
iv)	100	35	1.00
v)	125	35	1.25
vi)	150	35	1.50
vii)	175	35	1.75
viii)	200	35	2.00
ix)	225	35	2.25
x)	250	35	2.50
xi)	275	35	2.75
xii)	300	35	3.00
xiii)	325	35	3.25
xiv)	350	35	3.50
xv)	375	35	3.75
xvi)	400	35	4.00

NOTE — The coverage shall be calculated on the basis of the whole area reserved for group housing.

building/on-site. This can also be permitted in basement areas (*see* **12.9**) and in podium (*see* **4.6.1**) and the footprint for the basement parking may exceed the ground coverage of the building subject to no basement building construction to cross the building line and all other safety features for structural, fire, health and public safety being ensured (*see also* **12.9.2.2** and Fig. 11).

10 OFF-STREET PARKING SPACES

10.1 The off-street parking (on-site parking) spaces in a plot to be provided shall be in accordance with Annex A. The spaces given in Annex A shall be considered by the Authority in conjunction with the Development Rules, in force, if any.

10.2 The spaces to be left out for off-street parking as given in **10.3** to **10.6** shall be in addition to the open spaces left out for lighting and ventilation purposes as given in **20**.

10.2.1 Further 50 percent of the open spaces required around buildings under **8** may be allowed to be utilized for parking or loading or unloading spaces, provided a minimum distance of 3.6 m around the building is kept free from any parking, loading or unloading spaces subject to the provisions of Part 4 'Fire and Life Safety' of the Code.

10.3 Each off-street parking space provided for vehicles shall be as follows:

a) For car, the minimum parking space to be 3 m × 6 m when individual parking space is required and 2.75 m × 5 m when common parking space is required.

b) Space for scooter/two wheeler and bicycle to be not less than 1.25 m^2 and 1.00 m^2, respectively.

c) Area for each equivalent car space inclusive of circulation area is 23 m^2 for open parking, 28 m^2 for ground floor covered parking and 32 m^2 for basement.

10.4 For buildings of different occupancies, off-street parking space for vehicles shall be provided as stipulated below:

a) *Motor vehicles* — Space shall be provided as specified in Annex A for parking motor vehicles (cars).

b) *Other types of vehicles* — For non-residential building, in addition to the parking areas provided in (a) above, 25 to 50 percent additional parking space shall be provided for parking other types of vehicles and the additional spaces required for other vehicles shall be as decided by the Authority, keeping in view the nature of traffic generated in the city.

For residential occupancy, space for motorcycle/scooter/cycle/two-wheeler shall be provided at the rate of one for each tenement.

10.5 Off-street parking space shall be provided with adequate vehicular access to a street; and the area of drives, aisles and such other provisions required for adequate manoeuvering of vehicle shall be exclusive of the parking space stipulated in these provisions.

10.6 If the total parking space required by these provisions is provided by a group of property owners for their mutual benefits, such use of this space may be construed as meeting the off-street parking requirements under these provisions, subject to the approval of the Authority.

10.7 In buildings of mercantile (commercial), industrial and storage type, in addition to the parking spaces provided, a space at the rate of 3.5 m × 7.5 m, shall be provided for loading and unloading activities, for each 1 000 m^2 of floor area or fraction thereof.

10.8 Parking spaces shall be paved and clearly marked for different types of vehicles.

10.9 Apart from parking at ground level, provision of underground or multi-storeyed parking or podium parking may be permitted. The parking of vehicles at different level may also be mechanized. In the case of parking spaces provided in basement(s), at least two ramps of width and slope as per **4.6.1.3** shall be

provided, located preferably at opposite ends. In case of underground/multi-storeyed parking, special measures with regard to fire safety shall be taken (*see* Part 4 'Fire and Life Safety' of the Code).

10.10 Designated accessible parking spaces shall be provided in accordance with **B-3** for the occupancies specified in **13**.

11 GREENBELTS, LANDSCAPING AND WATER CONSERVATION

11.1 General

Greenbelts and landscaping including plantation of shrubs and trees help to certain extent in enhancing the environmental quality.

11.1.1 Planting of trees in streets and in open spaces should be done carefully to take advantage of both shades and sunshine without obstructing the flow of wind circulation and sight. Their advantage for abating glare and for providing cool and/or warm pockets in developed areas should also be taken.

11.2 Norms for Planting of Shrubs and Trees

11.2.1 Suitable provisions may be made for greeneries including plantation of shrubs and trees as a part of environmental protection in general. This aspect shall be taken care of from the initial stage of town and country planning, zoning and planning of development of particular area and group housing. Finally, this aspect shall also be taken into account in planning individual building of different occupancies.

11.2.2 The types of plants, the distance between trees/ plants from the building and the distance between plants shall be carefully worked out keeping in view the structural safety and aesthetic requirements of buildings.

11.3 Trees shall be numbered area-wise, plot-wise and road-wise by the concerned authority and they shall be checked periodically.

11.4 Cutting and pruning of trees in public as well as private areas shall be suitably regulated. Trees shall be cut only after obtaining the permission of the Authority designated for this purpose.

11.5 The landscape planning and design shall be done in accordance with Part 10 'Landscape Development, Signs and Outdoor Display Structures, Section 1 Landscape Planning, Design and Development' of the Code.

11.6 Water Conservation and Augmentation

In view of critical shortage of water, conservation of water by rain water harvesting and by use of recycled water to the maximum extent possible is required. In this regard the provisions given in **11.6.1** to **11.6.5** may be adopted.

11.6.1 The local authority preparing a town-planning scheme or a development plan should see that the local water bodies are preserved, and if dry, are activated by directing water-courses appropriately. If required, the same should be enlarged, deepened, etc.

11.6.2 The water body should be protected by ensuring that no permanent/temporary construction/development takes place around it up to a distance of 50 m from the edge of the water body and the same shall be suitably landscaped. Further, the public shall have easy access to the water body.

11.6.3 The rain water run off shall be suitably directed to recharging wells in plots belonging to the local authority and of appropriate design. The local authority should encourage for collection of rain-water from roofs and terraces and direct the same either to a storage tank or to a recharging well. These shall be done in accordance with Part 9 'Plumbing Services (including Solid Waste Management), Section 2 Drainage and Sanitation' of the Code.

11.6.4 Buildings having central air conditioning plants requiring water for cooling purposes may not be allowed to use fresh water for the purpose.

11.6.5 Commercial or residential multi-storeyed complexes may use recycled water for flushing of toilets, horticulture and fire fighting purposes. Separate storage tanks and separate distribution pipes shall be provided for the purpose.

12 REQUIREMENTS OF PARTS OF BUILDINGS

The requirements for various parts of buildings shall be in accordance with **12.1** to **12.9**. The requirements as given in **13**, for public buildings and sites as accessible and barrier free for elders and persons with disabilities, shall also be complied with.

12.1 Plinth

12.1.1 *Main Buildings*

The plinth or any part of a building or outhouse shall be so located with respect to the surrounding ground level that adequate drainage of the site is assured. The height of the plinth shall be not less than 450 mm from the surrounding ground level.

12.1.2 *Interior Courtyards and Covered Parking*

Every interior courtyard shall be raised at least 150 mm above the determining ground level and shall be satisfactorily drained.

12.2 Habitable Rooms

12.2.1 *Height*

The height of all rooms for human habitation shall not be less than 2.75 m measured from the surface of

the floor to the lowest point of the ceiling (bottom of slab). In the case of pitched roof, the average height of rooms shall not be less than 2.75 m. The minimum clear head room under a beam, folded plates or eaves shall be 2.4 m. In the case of air conditioned rooms, a height of not less than 2.4 m measured from the surface of the floor to the lowest point of air conditioning duct or the false ceiling shall be provided.

12.2.1.1 The requirements of **12.2.1** apply to residential, business and mercantile buildings. For educational and industrial buildings, the following minimum requirements apply :

a)	Educational buildings	:	Ceiling height 3.6 m for all regions; in cold regions, 3 m
b)	Industrial buildings	:	Ceiling height 3.6 m, conditioned, 3 m (*Factory Act*, 1948 and rules therein shall govern such heights, where applicable)

12.2.2 *Size*

The area of habitable room shall not be less than 9.5 m^2, where there is only one room with a minimum width of 2.4 m. Where there are two rooms, one of these shall not be less than 9.5 m^2 and the other not less than 7.5 m^2, with a minimum width of 2.1 m.

12.3 Kitchen

12.3.1 *Height*

The height of a kitchen measured from the surface of the floor to the lowest point in the ceiling (bottom slab) shall not be less than 2.75 m, except for the portion to accommodate floor trap of the upper floor.

12.3.2 *Size*

The area of a kitchen where separate dining area is provided, shall be not less than 5.0 m^2 with a minimum width of 1.8 m. Where there is a separate store, the area of the kitchen may be reduced to 4.5 m^2. A kitchen, which is intended for use as a dining area also, shall have a floor area of not less than 7.5 m^2 with a minimum width of 2.1 m.

12.3.3 *Other Requirements*

Every room to be used as kitchen shall have,

a) unless separately provided in a pantry, means for the washing of kitchen utensils which shall lead directly or through a sink to a grated and trapped connection to the waste pipe;
b) an impermeable floor;
c) a flue, if found necessary; and
d) a window or ventilator or opening of size not less than as specified in **20.1.1** subject to increase in area of opening in accordance with **20.1.2** (Note 3).

12.4 Bathrooms and Water-Closets

12.4.1 *Height*

The height of a bathroom or water-closet measured from the surface of the floor to the lowest point in the ceiling (bottom of slab) shall not be less than 2.1 m.

12.4.2 *Size*

The area of a bathroom shall not be less than 1.8 m^2 with a minimum width of 1.2 m. The floor area of water-closet shall be 1.1 m^2 with a minimum width of 0.9 m. If bath and water-closet are combined, its floor area shall not be less than 2.8 m^2 with a minimum width of 1.2 m.

12.4.3 *Other Requirements*

Every bathroom or water-closet shall,

a) be so situated that at least one of its walls shall open to external air;
b) not be directly over or under any room other than another water-closet, washing place, bath or terrace, unless it has a water-tight floor;
c) have the platform or seat made of water-tight non-absorbent material;
d) be enclosed by walls or partitions and the surface of every such wall or partition shall be finished with a smooth impervious material to a height of not less than 1 m above the floor of such a room;
e) be provided with an impervious floor covering, sloping towards the drain with a suitable grade and not towards *Verandah* or any other room; and
f) have a window or ventilator, opening to a shaft or open space, of area not less than 0.3 m^2 with side not less than 0.3 m.

12.4.4 No room containing water-closets shall be used for any purpose except as a lavatory and no such room shall open directly into any kitchen or cooking space by a door, window or other opening. Every room containing water-closet shall have a door completely closing the entrance to it.

12.5 Ledge or Tand/Loft

12.5.1 *Height*

The minimum head-room of ledge or *Tand*/loft shall be 2.2 m. The maximum height of loft shall be 1.5 m.

12.5.2 *Size*

A ledge or *TAND*/loft in a habitable room shall not cover more than 25 percent of the area of the floor on which it is constructed and shall not interfere with the ventilation of the room under any circumstances.

12.6 Mezzanine Floor

12.6.1 *Height*

It shall have a minimum height of 2.2 m.

12.6.2 *Size*

The minimum size of the mezzanine floor, if it is to be used as a living room, shall not be less than 9.5 m^2. The aggregate area of such mezzanine floor in a building shall in no case exceed one-third the plinth area of the building.

12.6.3 *Other Requirements*

A mezzanine floor may be permitted over a room or a compartment, provided,

a) it conform to the standard of living rooms as regards lighting and ventilation in case the size of mezzanine floor is 9.5 m^2 or more (*see* **20.1.2**);

b) it is so constructed as not to interfere under any circumstances with the ventilation of the space over and under it;

c) such mezzanine floor is not subdivided into smaller compartments;

d) such mezzanine floor or any part of it shall not be used as a kitchen; and

e) in no case shall a mezzanine floor be closed so as to make it liable to be converted into unventilated compartments.

12.7 Store Room

12.7.1 *Height*

The height of a store room shall be not less than 2.2 m.

12.7.2 *Size*

The size of a store room, where provided in a residential building, shall be not less than 3 m^2.

12.8 Garage

12.8.1 *Height*

The height of a garage shall be not less than 2.4 m.

12.8.2 *Size*

The size of garages shall be as below:

a) *Private garage* — 3.0 m × 6.0 m, minimum; and

b) *Public garage* — Based on the number of vehicles parked, etc (*see* **10**).

12.9 Basement

12.9.1 The basement shall not be used for residential purposes.

12.9.2 The construction of the basement shall be allowed by the Authority in accordance with the land use and other provisions specified under the Development Control Rules.

12.9.2.1 The following uses shall be permitted in the basements:

a) Storage of household or other goods of ordinarily non-combustible material;

b) Strong rooms, bank cellars, etc;

c) Air conditioning equipment and other machines used for services and utilities of the building; and

d) Parking spaces.

The Authority may also consider permitting mercantile occupancy as well as institutional occupancy for medical, health care services involving radiation facilities in the first basement subject to compliance of all requirements for fire safety in accordance with Part 4 'Fire and Life Safety' of the Code and necessary measures for required lighting, ventilation and water supply, drainage and sanitation.

12.9.2.2 The basements can be permitted below the ground and beyond the building lines at ground level subject to a clear minimum front margin of 4.5 m and side and rear margins of 3 m, and further subject to non-habitable uses and provision for mechanical ventilation and all safety provisions and drainage (*see* Fig. 11). However, it is essential that the basement top slab below the external circulation at ground level should be designed for fire fighting vehicular loads as given in **4.6**.

12.9.3 The basement shall have the following requirements:

a) Every basement shall be in every part at least 2.4 m in height from the floor to the underside of the roof slab or ceiling;

b) Adequate ventilation shall be provided for the basement. The ventilation requirements shall be the same as required by the particular occupancy according to byelaws. Any deficiency may be met by providing adequate mechanical ventilation in the form of blowers, exhaust fans, air conditioning systems, etc;

c) The height of the ceiling of any basement shall be minimum 0.9 m and the maximum, 1.2 m above the average surrounding ground level. However, in case of parking, mercantile or business occupancy at ground floor, minimum height of the ceiling of the basement may

be 0.3 m above the average surrounding ground level subject to mechanical ventilation being provided (*see* Fig. 11);

d) Adequate arrangements shall be made such that surface drainage does not enter the basement;

e) The walls and floors of the basement shall be watertight and be so designed that the effects of the surrounding soil and moisture, if any, are taken into account in design and adequate damp proofing treatment is given;

f) The access to the basement shall be separate from the main and alternative staircase providing access and exit from higher floors. Where the staircase is continuous in the case of buildings served by more than one staircase, the same shall be of enclosed type serving as a fire separation from the basement floor and higher floors. Open ramps shall be permitted if they are constructed within the building line subject to the provision of (d);

g) Access to basements through ramps shall be permitted subject to provision of (d). The requirements for the ramps shall be in accordance with **4.6.1.3** [*see also* Fig. 8 (b)];

h) For all public buildings and uses including group housing, having basement going up to more than one level, access to all levels shall also be provided through lift.

The exit requirements in basements shall comply with the provisions of Part 4 'Fire and Life Safety' of the Code.

12.10 Chimneys

The chimneys shall be built at least 0.9 m above flat roofs, provided the top of the chimneys is not below the top of the adjacent parapet wall. In the case of sloping roofs, the chimney top shall not be less than 0.6 m above the ridge of the roof in which the chimney penetrates.

12.11 Parapet

Parapet walls and handrails provided on the edges of roof terraces, balcony, *Verandah*, etc, shall not be less than 1.0 m and not more than 1.2 m in height from the finished floor level.

12.12 Cabin

The size of cabins shall not be less than 3.0 m^2 with a minimum width of 1.0 m. The clear passages within the divided space of any floor shall not be less than 0.75 m and the distance from the farthest space in a cabin to any exit shall not be more than 18.5 m. In case the subdivided cabin does not derive direct lighting and ventilation from any open spaces/ mechanical means, the maximum height of the cabin shall be 2.2 m.

12.13 Boundary Wall

The requirements of the boundary wall are given below:

a) Except with the special permission of the Authority, the maximum height of the compound wall shall be 1.5 m above the centre line of the front street. Compound wall up to 2.4 m height may be permitted if the top 0.9 m is of open type construction of a design to be approved by the Authority.

b) In the case of a corner plot, the height of the boundary wall shall be restricted to 0.75 m for a length of 10 m on the front and side of the intersections and the balance height of 0.75 m, if required in accordance with (a) may be made up of open type construction (through railings) and of design to be approved by the Authority.

c) However, the provisions of (a) and (b) are not applicable to boundary walls of jails. In industrial buildings, electric substations, transformer stations, institutional buildings like sanitoria, hospitals, industrial buildings like workshops, factories and educational buildings like schools, colleges, including hostels, and other uses of public utility undertakings and strategically sensitive buildings, a height up to 2.4 m may be permitted by the Authority.

12.14 Wells

Wells, intended to supply water for human consumption or domestic purposes, where provided, shall comply with the requirements of **12.14.1** and **12.14.2**.

12.14.1 *Location*

The well shall be located,

a) not less than 15 m from any ash pit, refuse pit, earth closet or privy and shall be located on a site upwards from the earth closet or privy;

b) not less than 18 m from any cess pit soakway or borehole latrine and shall be located on a site upwards from the earth closet or privy;

c) such that contamination by the movement of sub-soil or other water is unlikely; and

d) not under a tree or otherwise it should have a canopy over it, so that leaves and twigs may not fall into the well and rot.

12.14.2 *Requirements*

The well shall,

a) have a minimum internal diameter of not less than 1 m;

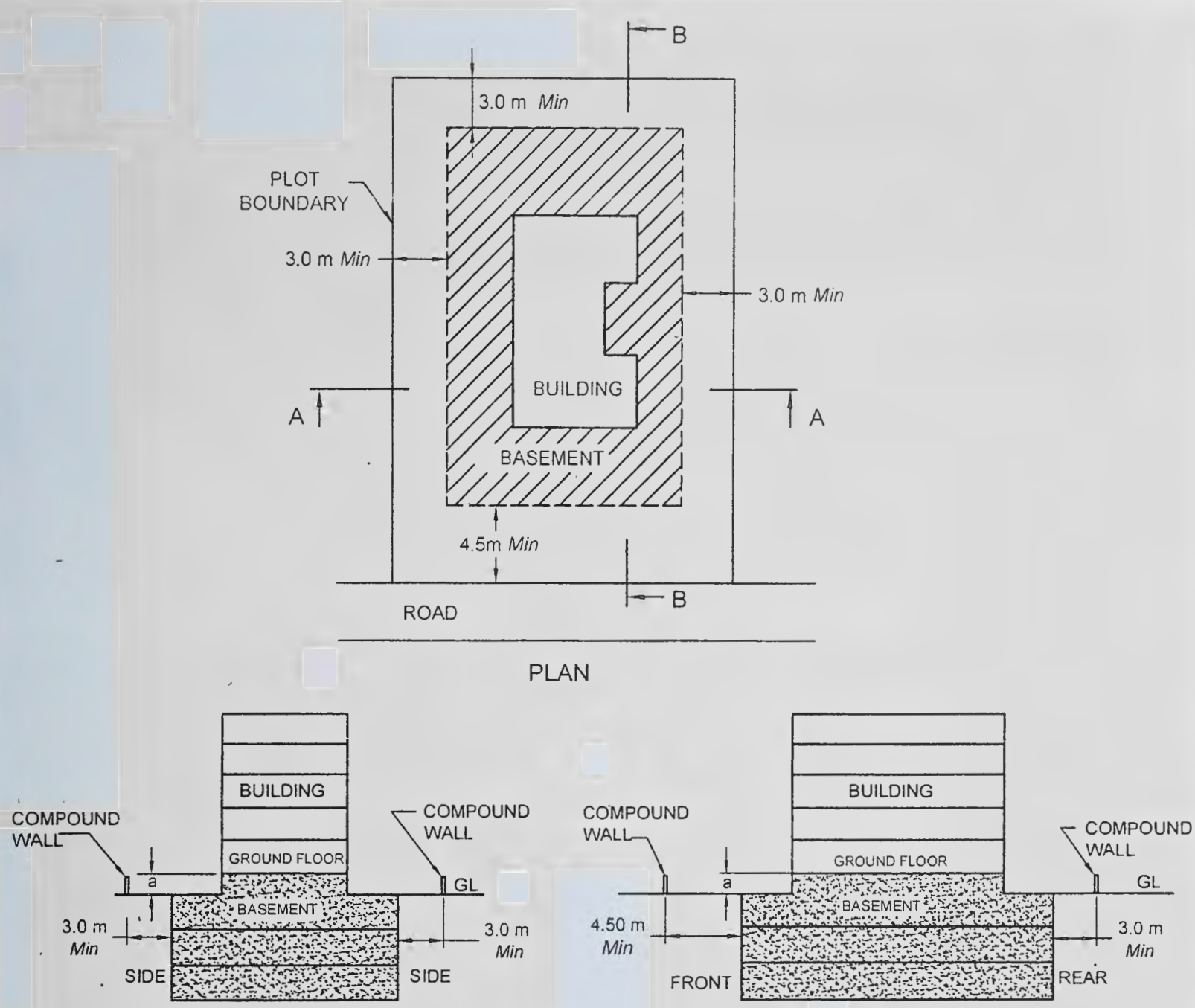

NOTE — For 'a', *see* **12.9.3** (c)

FIG. 11 BASEMENT

b) be constructed to a height not less than 1 m above the surrounding ground level, to form a parapet or kerb and to prevent surface water from flowing into a well, and shall be surrounded with a paving constructed of impervious material which shall extend for a distance of not less than 1.8 m in every direction from the parapet from the kerb forming the well head and the upper surface of such a paving shall be sloped away from the well;

c) be of sound and permanent construction (*Pucca*) throughout. Temporary or exposed (*Kutcha*) wells shall be permitted only in fields or gardens for purposes of irrigation; and

d) have the interior surface of the lining or walls of the well be rendered impervious for a depth of not less than 1.8 m measured from the level of the ground immediately adjoining the well-head.

12.15 Septic Tanks

Where a septic tank is used for sewage disposal, the location, design and construction of the septic tank shall conform to requirements of **12.15.1** and **12.15.2** [*see also* Part 9 'Plumbing Services (including Solid Waste Management), Section 2 Drainage and Sanitation' of the Code].

12.15.1 *Location of the Septic Tanks and Subsurface Absorption Systems*

A subsoil dispersion system shall not be closer than 18 m from any source of drinking water, such as well, to mitigate the possibility of bacterial pollution of water supply. It shall also be as far removed from the nearest habitable building as economically feasible but not closer than 6 m, to avoid damage to the structures.

12.15.2 *Requirements*

a) *Dimensions of septic tanks* — Septic tanks shall have a minimum width of 750 mm, a minimum depth of 1 m below the water level and a minimum liquid capacity of 1 m^3. The length of tanks shall be 2 to 4 times the width;

b) Septic tanks may be constructed of brickwork, stone masonry, concrete or other suitable materials as approved by the Authority;

c) Under no circumstances shall effluent from a septic tank be allowed into an open channel drain or body of water without adequate treatment;

d) The minimum nominal diameter of the pipe shall be 100 mm. Further, at junctions of pipes in manholes, direction of flow from a branch connection shall not make an angle exceeding 45° with the direction of flow in the main pipe;

e) The gradients of land drains, under-drainage as well as the bottom of dispersion trenches and soakways shall be between 1:300 and 1:400;

f) Every septic tank shall be provided with ventilating pipe of at least 50 mm diameter. The top of the pipe shall be provided with a suitable cage of mosquito-proof wire mesh.

The ventilating pipe shall extend to a height which would cause no smell nuisance to any building in the area. Generally, the ventilating pipe may extend to a height of about 2 m, when the septic tank is at least 15 m away from the nearest building and to a height of 2 m above the top of the building when it is located closer than 15 m;

g) When the disposal of septic tank effluent is to a seepage pit, the seepage pit may be of any suitable shape with the least cross-sectional dimension of 0.90 m and not less than 1.00 m in depth below the invert level of the inlet pipe. The pit may be lined with stone, brick or concrete blocks with dry open joints which should be backed with at least 75 mm of clean coarse aggregate. The lining above the inlet level should be finished with mortar. In the case of pits of large dimensions, the top portion may be narrowed to reduce the size of the RCC cover slabs. Where no lining is used, specially near trees, the entire pit should be filled with loose stones. A masonry ring may be constructed at the top of the pit to prevent damage by flooding of the pit by surface runoff. The inlet pipe may be taken down a depth of 0.90 m from the top as an anti-mosquito measure; and

h) When the disposal of the septic tank effluent is to a dispersion trench, the dispersion trench shall be 0.50 m to 1.00 m deep and 0.30 m to 1.00 m wide excavated to a slight gradient and shall be provided with 150 mm to 250 mm of washed gravel or crushed stones. Open jointed pipes placed inside the trench shall be made of unglazed earthenware clay or concrete and shall have a minimum internal diameter of 75 mm to 100 mm. Each dispersion trench shall not be longer than 30 m and trenches shall not be placed closer than 1.8 m.

12.16 Office-Cum-Letter Box Room

In the case of multi-storeyed multifamily dwelling apartments constructed by existing and proposed Cooperative Housing Societies or Apartment Owners Associations, limited companies and proposed societies, an office-cum-letter box room of dimension 3.6 m × 3 m shall be provided on the ground floor. In case the number of flats is more than 20, the maximum size of the office-cum-letter box room shall be 20 m^2.

12.16.1 *Business Buildings*

Provision shall be made for letter boxes on the entrance floor as per the requirements of the postal department.

12.17 Meter Rooms

For all buildings above 15 m in height and in special occupancies, like educational, assembly, institutional, industrial, storage, hazardous and mixed occupancies with any of the aforesaid occupancies having area more than 500 m^2 on each floor, provision shall be made for an independent and ventilated meter (service) room, as per requirements of electric (service) supply undertakings on the ground floor with direct access from outside for the purpose of termination of electric supply from the licensee's service and alternative supply cables. The door/doors provided for the service room shall have fire resistance of not less than two hours.

12.18 Staircase/Exit Requirements

12.18.1 The minimum width, minimum tread width and maximum riser of staircases for buildings shall be as given in **12.18.1.1** to **12.18.1.3** (*see also* Part 4 'Fire and Life Safety' of the Code).

12.18.1.1 *Minimum clear width*

The following minimum width shall be provided for staircases for respective occupancies (*see* **7.1** and Part 4 'Fire and Life Safety' of the Code for classification of buildings based on occupancy):

a)	Residential (A-2) NOTE — For row housing with 2 storeys, the minimum width shall be 0.75 m.	: 1.00 m
b)	Residential (A-1, A-3 and A-4)	: 1.25 m
c)	Residential hotel (A-5 and A-6)	: 1.50 m
d)	Assembly NOTE — The width of stairs may be accepted to be 1.50 m in case of assembly occupancy having less than 150 persons	: 2.00 m
e)	Educational	: 1.50 m
f)	Institutional	: 2.00 m
g)	All other occupancies	: 1.50 m

12.18.1.2 *Minimum tread*

The minimum width of tread without nosing shall be 300 mm. However, for one or two family dwelling, it may be reduced to not less than 250 mm.

12.18.1.3 *Maximum riser*

The maximum height of riser shall be 150 mm. However, for one or two family dwelling, it may be increased to not more than 190 mm.The number of risers shall be limited to 12 per flight.

12.18.2 The minimum head-room in a passage under the landing of a staircase shall be 2.2 m. The minimum clear head-room in any staircase shall be 2.2 m.

12.18.3 *Exit Requirements*

All aspects of exit requirements for corridors, doors, staircases, ramps, etc, in respect of widths, travel distance shall be as per Part 4 'Fire and Life Safety' of the Code.

12.19 Roofs

12.19.1 The roof of a building shall be so designed and constructed as to effectively drain water by means of sufficient rain water pipes of adequate size, wherever required, so arranged, jointed and fixed as to ensure that the rain water is carried away from the building without causing dampness in any part of the walls, roof or foundations of the building or an adjacent building.

12.19.2 The Authority may require rain water pipes to be connected to a drain or sewer to a covered channel formed beneath the public footpath to connect the rain-water pipe to the road gutter or in any other approved manner.

12.19.3 Rain-water pipes shall be affixed to the outside of the external walls of the building or in recesses or chases cut or formed in such external walls or in such other manner as may be approved by the Authority.

12.19.4 It is desirable to conserve rain water using suitable rain water harvesting techniques including by roof water collection. In this context, reference shall be made to Part 9 'Plumbing Services (including Solid Waste Management), Section 2 Drainage and Sanitation' of the Code.

13 REQUIREMENTS FOR ACCESSIBILITY IN BUILT ENVIRONMENT FOR ELDERS AND PERSONS WITH DISABILITIES

13.1 General

13.1.1 These requirements deal with barrier free access to, movement within and around buildings, by the elderly persons and persons with disabilities who may have non-ambulatory disabilities, ambulatory disabilities, sight disabilities, hearing disabilities, disabilities of inco-ordination, ageing, allergies, heart and lung diseases, epilepsy, haemophilia, incontinence, enterostomy, etc.

It is intended to make all buildings and facilities used by the public accessible to, and usable by all people including those living with disabilities and may include those with inability to walk or difficulty in walking, reliance on walking/mobility aids, blindness and visual impairments, speech and hearing impairments, in-coordination of motor movements, reaching and manipulation, lack of stamina, difficulty in interpretation and reacting to sensory information and extremes in physical sizes. It supplements the general requirements of this Part of the Code, and reflects greater concern for safety of life and limb of every resident irrespective of age, gender or abilities.

13.1.2 These requirements apply to all buildings and facilities open to and used by the public. These shall also apply to all forms of public housing by the government/civic bodies or private developers. It does not apply to private residences. For extent of application of requirements covered under **13** to different building occupancy types, reference shall be made to **13.5**.

13.1.3 The reference to the accessibility needs of persons with disabilities, made in this Part shall also mean a reference to such needs of the elderly persons, children and persons of too short stature in so far as the concerned provision is applicable to the type of disabilities that may be associated therewith.

13.2 For the purpose of this clause, the following definitions shall apply.

13.2.1 *Ability* — identifiable human attribute, including but not exclusively, to walk, to speak, to hear, to see, to feel by touch, to taste, to understand, and to recognize.

13.2.2 *Access Aisle* — An accessible pedestrian space between elements, such as parking spaces, seating and desks, that provides clearances appropriate for use of the elements

13.2.3 *Accessible Site, Building, Facility or Portions* — A site, building, facility, or portions thereof that complies with the requirements given in this clause to

which people, regardless of their disability, age or gender are able to gain access to, in to them, to use them and exit from them with dignity.

NOTE — Accessibility includes ease of independent approach, entry, evacuation and/or use of a building and its services and facilities, by all of the building's potential users with an assurance of individual health, safety and welfare during the course of those activities.

13.2.4 *Accessible Route* — A continuous unobstructed path connecting all accessible elements and spaces in a building or facility that may be negotiated by a person with disabilitiy using a wheelchair and that is also safe for and usable by persons with other disabilities. Interior accessible routes may include corridors, ramps, elevators, lifts, and clear floor space at fixtures. Exterior accessible routes may include parking, access aisles, kerb ramps, walkways, pathways, footpaths/sidewalks, and ramps.

13.2.5 *Accessible Toilet* — A compartment having the basic requirements of minimum clear spaces, water-closet, washbasin and other essential washroom accessories as required by people with non-ambulatory disabilities. There are also toilets for ambulant disabled which provide accessibility for convenient use by persons with ambulatory disabilities.

13.2.6 *Ageing* — Those manifestations of the ageing processes that significantly reduce mobility, flexibility, coordination, and perceptiveness but are not accounted for in disability categories mentioned elsewhere in this Part.

13.2.7 *Area of Rescue Assistance* — Building space directly adjoining, and visible from, a main vertical evacuation route, robustly and reliably protected from heat, smoke and flame during and after a fire, where people can temporarily wait with confidence for further information, instructions, and/or rescue assistance, without obstructing or interfering with the evacuation travel of other building users

NOTE — 'Robust' means structurally hardened and resistant to mechanical damage during the fire and for a period of time afterwards, that is, the cooling phase.

13.2.8 *Assistive Product/Device* — Product/device especially produced or generally available, for preventing, compensating for, monitoring, relieving or neutralizing impairments, activity limitations and participation restrictions.

13.2.9 *Assisted Evacuation* — Strategy that exists during which a designated person or persons provide assistance, during an emergency, to another person to leave a building or a specific part of the built environment and to reach a final place of safety.

13.2.10 *Automatic Door* — A door equipped with a power operated mechanism and controls that open and close the door automatically upon receipt of a momentary signal. The switch that begins the automatic cycle may be photoelectrical device, floor mat, sensing device, or manual switch mounted on or near the door itself.

13.2.11 *Circulation Path* — An exterior or interior way of passage from one place to another for pedestrians, including walkways, pathways, hallways, courtyards, stairways and stair landings.

13.2.12 *Circulation Space* — Unobstructed space necessary for access to, into and within and egress from any part of the built environment.

13.2.13 *Clear* — Unobstructed.

13.2.14 *Colour Contrast* — The difference in colour that makes an object (or its representation in an image or display) distinguishable. It is determined by the difference in the colour of the object and other objects within the same field of view. Distinguishing one form/object from another by hue is the most basic and easily understood contrast.

NOTE — The basic guidelines for making effective colour choices are based on the hue value of the colours. The most commonly used methods of achieving colour contrast incorporate either harmonizing or contrasting colour combinations. Contrast of hue is what relates most directly to the colour wheel combinations. The further away from each other two colours are, the higher the contrast. This means that the complementary colour combination has the highest contrast, while the analogous combination has the lowest.

13.2.15 *Disability* — An umbrella term for impairments, activity limitations, and participation restrictions, denoting the negative aspects of the interaction between an individual (with a health condition) and that individual's contextual factors(environmental and personal factors). Disability is neither simply a biological nor a social phenomenon but arises from the relationship between health condition and context.

13.2.16 *Grab Bars* — A bar used to give a steadying or stabilizing assistance to a person engaged in a particular function.

13.2.17 *Handrails* — A rail used in circulation areas such as corridors, passageways, ramps and stairways to assist in continuous movement.

13.2.18 *Hue* — Attribute of visual sensation which has given rise to colour names, such as, blue, green, yellow, red and purple.

NOTE — People with normal colour vision report that hues follow a natural sequence based on their similarity to one another. With most colour deficits, the ability to discriminate between colours on the basis of hue is diminished.

13.2.19 *Impairment* — Limitation in body function or structure such as a significant deviation or loss which can be temporary due, for example to injury, or permanent, slight or severe and can fluctuate over time, in particular, deterioration due to ageing.

NOTE — Body function can be a physiological or psychological function of a body system; body structure refers to an anatomic part of the body such as organs, limbs and their components.

13.2.20 *International Symbol of Accessibility* — The symbol consisting of a square overlaid with a stylized image of a person using a wheelchair (*see* **B-24.2.16** and Fig. 105).

NOTE — The symbol is often provided where access has been improved, particularly for wheelchair users and other mobility impaired persons. The symbol denotes a barrier free environment, to help older people, parents with prams and travellers with luggage besides persons with disabilities. The wheelchair symbol is always facing to the right.

13.2.21 *Kerb* — A side barrier to a trafficable surface or the edge where a raised sidewalk/footpath, road median, or road shoulder meets an unraised street or other roadway.

13.2.22 *Kerb Ramp* — A short ramp cutting through a kerb or built up to it.

13.2.23 *Knurled Surface* — Roughened area, often in a crisscross pattern; used on grab bars to improve grasp and to prevent slipping.

13.2.24 *Landing* — A platform or part of a floor structure at the end of a flight of stairs or a ramp or at the entrance to a lift car.

13.2.25 *Light Reflectance Value (LRV)* — The total quantity of visible light reflected by a surface at all wavelengths and directions when illuminated by a light source.

13.2.26 *Manoeuvring Zone* — The minimum three dimensional space within which it is feasible to complete a manoeuvre needed to gain access to a specific facility, component or fitting, in particular while using a wheelchair or a walking aid.

13.2.27 *Ramp* — The construction, in the form of an inclined plane that is steeper than or equal to 1:20 (5 percent) from the horizontal, together with any intermediate landing, that makes it possible to pass from one level to another (*see* **B-6.2**).

13.2.28 *Operable Parts* — A part of a piece of equipment or appliance used to insert or withdraw objects, or to activate, deactivate, or adjust the equipment or appliance (for example coin slot, push button, handle, etc).

13.2.29 *Persons with Disabilities* — A person with any physical, mental, intellectual or sensory impairment which in interaction with various barriers may hinder full and effective participation in society on an equal basis with others.

13.2.30 *Space* — A definable area (for example toilet room, hall, assembly area, entrance, storage, room alcove, courtyard, or lobby).

13.2.31 *Tactile* — That relating to perception using the sense of touch.

NOTE — It relates to information and interpretations derived from the sense of touch. This involves sensory transfer through physical contact of the hands or feet with other surfaces, as well as sensory transfers received by contact with non-physical elements such as pressure, wind and temperature.

13.2.32 *Tactile Ground Surface Indicators* — Indicators profiled paving surface with visual contrast criteria to enable a person with impaired sight using a long cane, underfoot or visual identification to detect a specific route (guiding pattern) or the presence of a hazard (attention pattern). These are also called tactile tiles or tactile walking surface indicators.

NOTE — These indicators which provide a distinctive surface pattern of strips and truncated domes or cones (small domes or cones that have had their tops cut off, or truncated) are used to guide/alert persons with vision impairments of their approach to facilities, streets and hazardous drop-offs. People who are blind or visually impaired are alerted of impending danger from vehicle impact or a grade change.

13.2.33 *Tactile Guiding Blocks* — Tiles of size 300 mm × 300 mm that incorporate flat topped bars 5 mm (± 0.5 mm) high, 20 mm wide and spaced 50 mm from the centre of one bar to the centre of the next, and are easily detectable underfoot by persons with visual impairments. They are used externally to guide people with visual impairments along the circulation path. They may also be used internally in large busy areas such as railway stations and airports.

13.2.34 *Tactile Warning Blocks* — Tiles of size 300 mm × 300 mm that incorporate rows of 5 mm (± 0.5 mm) high flat topped blister like domes that are easily detectable underfoot by persons with visual impairments, recognized as a sign of approaching hazards. These are placed along the approach path to unavoidable obstacles and hazards to warn persons with visual impairments of the approaching danger or level change.

13.2.35 *Tactile Signs* — Tactile signage incorporates raised text or symbols to enable touch reading by people who are blind, and touch enhancement of visual perception for people who are vision impaired.

13.2.36 *Unobstructed Width* — Free unobstructed space necessary for passage through a doorway, along a passageway, or other route element (for example stairway).

13.2.37 *Unobstructed Width, Door* — Available width for passage through a door opening, clear of all obstructions, measured when the door is opened 90°, or when a sliding or folding door is opened to its fullest extent

13.2.38 *Unisex Accessible Toilet* — Accessible toilets that can be used by both sexes.

NOTE — Unisex accessible toilets allow the greatest flexibility for people who require assistance.

13.2.39 *Universal Design* — The design of products and environments to be usable by all people, to the greatest extent possible, without the need for adaptation or specialized design.

13.2.40 *Visual Contrast* — Visual perception between one element of a building and another. This can be produced by a difference in light reflectance value (LRV) or luminance, also called luminance contrast.

NOTE — Light reflectance value is measured on a scale of 0 to 100 where 0 equals black meaning total light absorption and 100 equals white meaning total light reflection.

A simple formula for visual contrast is given below for guidance:

$$\text{Visual contrast} = [(B1 - B2)/B1] \times 100, \text{ in percent}$$

where

$B1$ = LRV of the lighter area; and

$B2$ = LRV of the darker area.

In most circumstances, a difference in these values of 30 percent is considered adequate. However, research suggests that signs are more legible for the visually impaired when characters contrast with their background by at least 70 percent.

13.2.41 *Walks (Walkways)* — A predetermined prepared surface, exterior pathway leading to or from a building or facility, or from one exterior area to another, placed on the existing ground level and not deviating from the level of the existing ground immediately adjacent.

13.2.42 *Way Finding* — Descriptive of a system whereby appropriate information is provided to assist a person to pass through the built environment towards a specific destination.

NOTE — Way finding includes orienting oneself, knowing one's destination, following the best route, recognizing one's destination and finding one's way back out. People who are blind or who have a vision impairment benefit from tactile information to facilitate way finding.

13.2.43 *Wheelchair User* — A person who relies on a wheelchair for mobility.

13.2.44 *Water-Closet Compartment/Toilet Cubicle* — A compartment having a water-closet with grab bars installed to assist persons with physical disabilities/ mobility impairments.

13.2.45 *White Cane* — A long rod-like device used by blind or visually impaired travellers to give them information about the environment they are travelling through.

13.3 General Design Considerations

13.3.1 These requirements relate to the principal human abilities that should be considered when designing, constructing and managing the built environment. Some of these abilities are described in **B-1** which gives an overview of concerned design considerations that should be taken into account.

13.3.2 *Design Aspects According to Human Abilities*

Understanding of the human abilities or limitation thereof as described below, and design aspects according to the same, when fully implemented, are expected to benefit all people:

a) *Non-ambulatory disabilities* — Impairments that, regardless of cause or manifestation, for all practical purposes, make an individual a wheelchair user for his mobility. The requirement of non-ambulatory disabilities relates primarily to the design of buildings, so as to meet their independent mobility needs while sitting in the wheelchair with or without assistance, minimum widths and heights, level changes and signage, etc.

b) *Ambulatory disabilities* — Impairments that cause individuals to walk with difficulty or insecurity of balance. Such persons are able to walk on level, either with or without personal assistance, and may depend on prostheses (artificial limbs), orthoses (calipers), sticks, crutches or walking aids or may negotiate suitably graded steps provided that convenient handrails are available. For example elders using walking sticks, ladies in advance stage of pregnancy, temporary disabilities, such as, fracture, individuals using braces or crutches, amputees, persons having arthritis, those with spasticity and those with pulmonary and cardiac ills, etc, may be ambulatory disabled.

c) *Sight disabilities* — Total blindness or impairments affecting sight to the extent that the individual may have to use his other sensory organs such as sense of touch and hearing, use assistive devices for orientation in the environment, such as white cane. Accordingly, building design needs to take in to account means, such as, tactile, Braille and audio-visual, and colour contrasting signage.

d) *Hearing disabilities* — Deafness or hearing impairment may affect an individual's verbal communication or ability to hear warning signals in the environment. The buildings needs to be designed to provide more visual signage, induction loops for hearing enhancement, emergency audio-visual sirens, etc.

e) *Disabilities of incoordination* — Incoordination of motor movements due to cerebral palsy, spinal injury or peripheral nerve injury.

f) *People with allergies* — People with allergies may be sensitive to dust, mildew, pollen, animal hair, formalin, turpentine, etc. Some are sensitive to contact with substances and materials such as nickel, chromium and rubber.

g) *People with heart and lung diseases* — People with heart and lung diseases may only be able to walk short distances and may be unable to climb stairs. The requirements of these people are similar to those with impaired mobility.

h) *People with epilepsy, haemophilia, etc* — The requirements of those with epilepsy, heamophilia, etc, are related primarily to the design of buildings and the need to minimize the risk of injury caused by falling or encountering obstacles.

j) *People with incontinence, enterostomy operations, etc* — The requirements of people with incontinence, enterostomy operations, etc, (colostomies, ileostomies and urostomies) are mainly related to bathroom provision. In certain circumstances, for example in public water-closet compartments, it may be desirable to provide a special sink for emptying urine bags.

k) *People with hidden (such as strength, stamina, dexterity and allergy) impairments*, and

m) *People with diversities in age and stature* (including frail persons).

13.3.3 *Key Accessibility Issues*

Entering, using and evacuating buildings should be safe and easy for individuals, families and groups which include persons with disabilities. The main considerations are as follows:

1) Pedestrian access into site;
2) Designated vehicular parking near the main entrance;
3) Accessible path to the entrance;
4) Appropriate external lighting;
5) Accessible external furniture (seats, bins, etc);
6) Accessible information at the entrance to the site;
7) Suitable drop-off point near main entrance;
8) Reduced travelling distances;
9) Level entrances and exits;
10) Simple and logical layouts;
11) Unobstructed level circulation;
12) Easy access to information desks, lifts and toilet compartments for disabled persons;
13) Intuitive, obvious and accessible means of egress;
14) Spacious lifts;
15) Safe stairs that are easy to use, and facilitate safe assisted evacuation/rescue in emergencies;
16) Slip-resistant walking surfaces;
17) Wide door openings and easy door operation, sufficient space around doors that makes it possible to open and close them when seated in a wheelchair;
18) Adequate manoeuvring space;
19) Adequate height, location and easy operation of controls and switches;
20) Good lighting;
21) Good visual contrast of walls, floors, doors and signage;
22) Good signage;
23) Important information communicated *via* two senses or more (tactile, audible and visual);
24) Good acoustics;
25) Hearing enhancement systems; and
26) Management and maintenance of the built environment.

The key accessibility issues are highlighted in Table 7.

13.4 Various key accessibility issues shall be taken into account for ensuring accessibility in built environment in accordance with the provisions given in Annex B in regard to anthropometrics and specific requirements on site planning and development, designated accessible parking space, approach to the buildings, access at entrance and within the buildings, controls and operating mechanisms, seating spaces, other facilities, level changes, toilet and sanitary facilities, emergency evacuation in buildings, signages, etc. Requirements for accessibility in buildings and built environment as given in other Parts/Sections of the Code shall also be complied with.

13.5 Various accessibility requirements for persons with disabilities and the elderly shall be applied to different building occupancies in accordance with Table 8, unless mentioned otherwise specifically in Annex B. In addition, all building occupancy types shall comply with the following:

a) At least one entrance preferably the main entrance per building shall be accessible. All efforts should be made to make as many/all entrances accessible.

b) All common areas open to public and staff and all facilities provided in a building for

Table 7 Key Accessibility Issues

(*Clause* 13.3.3)

Sl No. (1)	Key Accessibility Issues (2)	Example (3)
i)	Equitable approach to a building, for example designated parking, clear pedestrian routes separate from vehicles and cyclists, no steps or obstacles, short distances from parking and public transport, good signage, good lighting and good contrast	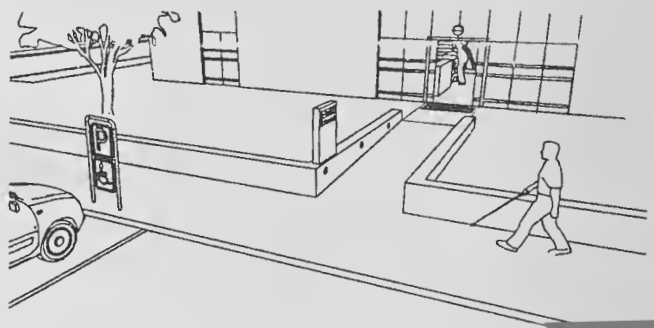
ii)	Equitable entry *via* the same entrances, for example easy to locate main entrances, no steps or obstacles, wide openings, adequate manoeuvring space in front of the door, low operating forces, good signage, good lighting and good visual contrast	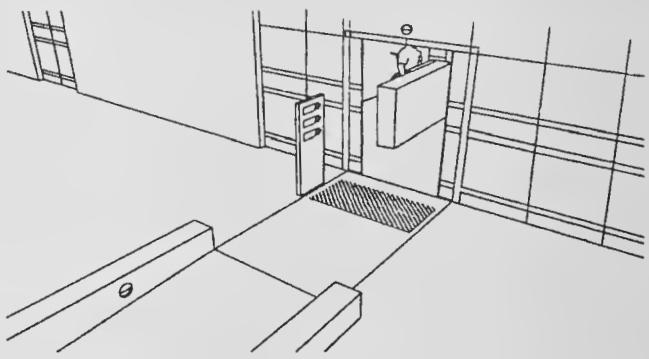
iii)	Equitable use of the same paths in horizontal circulation, for example no steps or obstacles, adequate manoeuvring space, wide door openings, easy to operate doors, resting places, clear layout, good signage, good lighting and good visual contrast	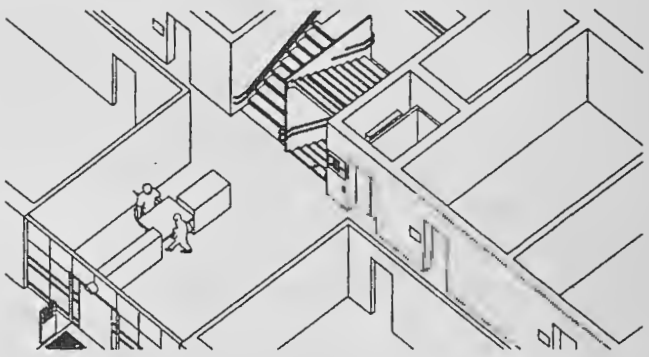
iv)	Equitable access to the same paths in vertical circulation, for example safe stairs, spacious lifts with easy operation, good signage, good lighting and good visual contrast	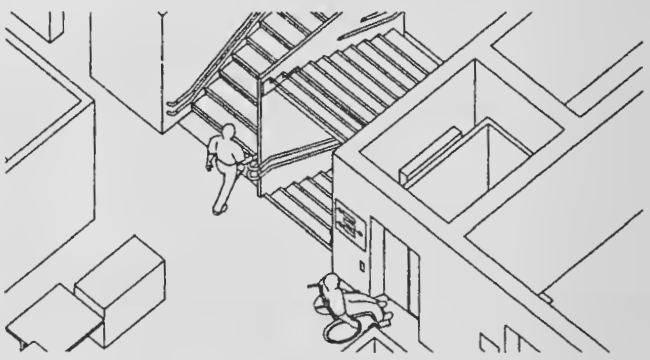
v)	Equitable use of the same rooms, for example ample circulation space and different seating possibilities, good acoustics and hearing enhancement systems, good lighting and good visual contrast	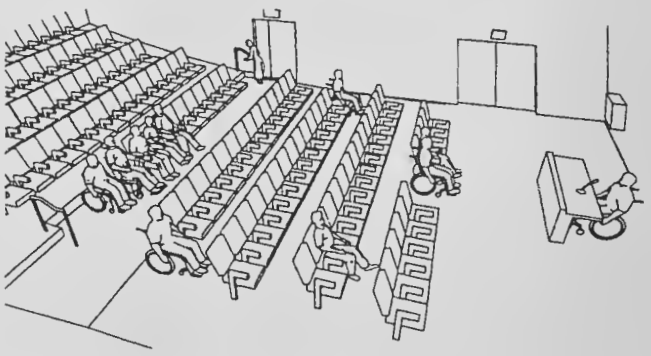

Table 7 — (*Concluded*)

(1)	(2)	(3)
vi)	Equitable use of the same equipment and facilities. for example easy to understand and operate, adequate manoeuvring space and operating height, information *via* two senses	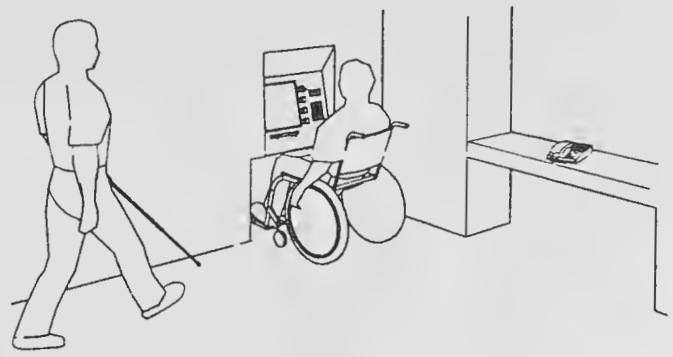
vii)	Equitable use of toilet and sanitary facilities, for example good signage, adequate manoeuvring space, good transfer options, well-placed equipment, easy operation	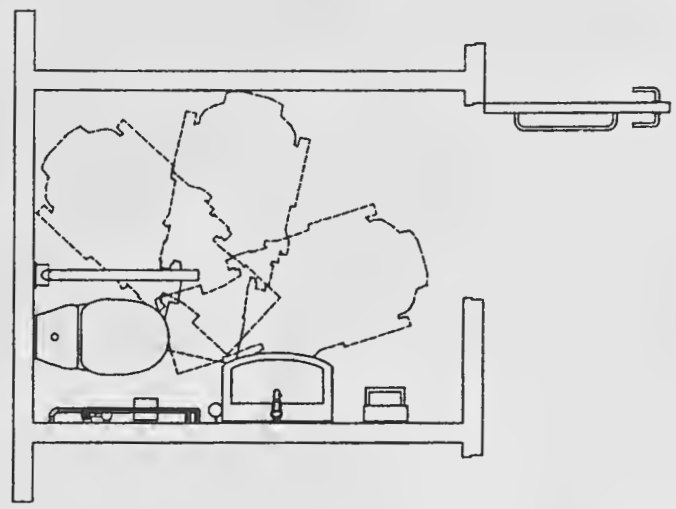
viii)	Equitable means of egress, concepts for emergency planning, for example no steps or obstacles, fire protected lifts, good signage, good lighting, good visual contrast, good fire safety, protection and evacuation, accessible means of egress	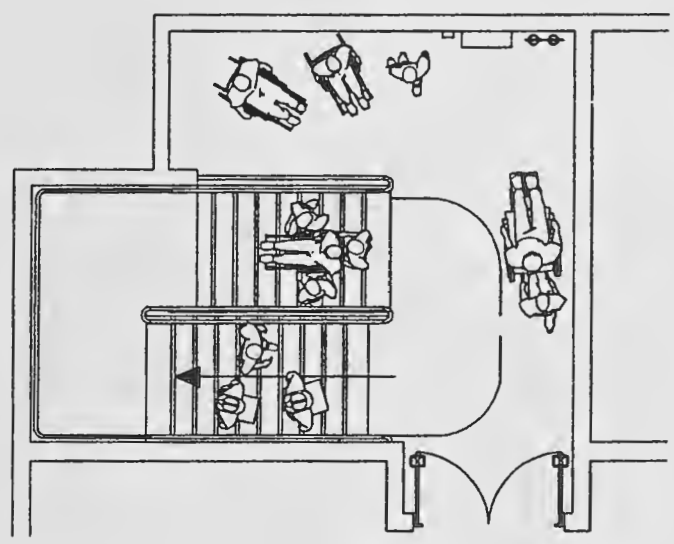
ix)	Important information *via* two senses or more, for example visual, audible and tactile	

Table 8 Minimum Accessibility Provisions in Different Building Occupancies

(*Clause* 13.5)

Sl No.	Category	Type of Built Environment Within the Category	Applicability
(1)	(2)	(3)	(4)
i)	Residential	Public housing including low income housing and housing developed by private developers	a) All common and communal areas, such as, approach, entrances/exits, lifts, stairs, lobbies, clubs, religious facilities, parking, sports facilities/parks and recreation areas, etc, and associated sanitary and other facilities therein. b) 5 percent houses to be accessible meeting accessibility requirements, preferably on ground floor. c) In all other 95 percent houses, minimum universal design features, such as, minimum clear door widths of: main entrance, rooms, kitchen and that of at least one toilet and sanitary room in each house. Such toilet and sanitary room in the house shall be the one having access from the living/drawing room and their size shall comply with those given in **B-9** to allow the occupants to adapt to their needs to facilitate ageing-in-place and disabled friendly environment. NOTE □ The provisions given in (c) are minimum prescriptions with the objective to progressively move towards universal design of the buildings and the built environment, to be usable by all people, to the greatest extent possible irrespective of their age, situation, abilities, gender or any other diversity.
ii)	Hotels/hospitality centres	Hotels, dormitories, lodging and rooming houses, such as inns, clubs, motels and guest houses	Minimum five percent of the total rooms including their toilet room, shower room, balcony, etc, shall be accessible and preferably be provided on the ground floor for ease of evacuation in case of an emergency. All other rooms shall have universal design features (without specific adaptations like handrails/grab bars, etc). This would include minimum clear door widths of 900 mm of all entrances including those of sanitary rooms and balcony areas; and minimum passage width of 1 200 mm in the rooms and required turning radius. In accommodations having more than one toilet/sanitary room, one such facility shall be accessible. In case of accessible accommodations, a choice of right or left hand transfer to the toilet and shower shall be provided.
iii)	Educational buildings	Schools, colleges, classrooms, libraries, assembly points, halls, staff rooms, laboratories, play grounds	a) All teaching/administrative and common areas frequented by staff/students. b) In libraries all open book stacks. Few enclosed rooms in library for those with hearing and vision impairments who may need assistance while reading. c) In laboratories, equipment and facilities.
iv)	Hospitals/ health facilities	Hospitals/clinics/diagnostic centres/pharmacy, etc	All public areas to be accessible, including OPDs, IPDs, wards, toilets, changing rooms, sample collection rooms, x-ray rooms, patient examination rooms, medical distribution rooms/centres.
v)	Assembly buildings	Stadia, theatres, lecture halls, spectator seating in sports centres and all other type of assembly halls with fix seatings, by whatever name called	To all common areas/facilities open to public and staff. Number of designated seating areas to be as per **B-12.3**.
vi)	Public transit buildings	Bus terminus, airports, railway/metro stations, organized inter-change points/transit junctions, taxi stands	All public areas used by passengers and staff including but not limited to drop off areas, parking, boarding/transfer areas, waiting areas/lounges, custom areas, baggage halls, booking halls, inquiry offices, ticket counters, shops, banks, etc.
vii)	Heritage buildings/ sites	All heritage sites/buildings protected by concerned authorities and open to public, interpretation centres, ancillary services/ facilities	a) Reasonable access to all public areas without affecting the historical character of the building. b) Alternative solutions and innovative methods that do not conflict with conservation/preservation requirements should be explored.

Table 8 — (*Concluded*)

(1)	(2)	(3)	(4)
viii)	Public toilets		To be provided in accordance with **B-9.15**.
ix)	Cafeterias and restaurants		To be provided in accordance with **B-15**.
x)	Sports buildings		a) Sports halls, administration and common areas. b) At least one changing room and shower room to be provided at every place where such facility is provided. c) Spectators seating areas for wheelchair users as per assembly buildings above.
xi)	Mercantile buildings	Shops, malls, large multi-storey department stores and super markets, etc	At least one trial room for each group of such facility. Where only one is provided, it shall be accessible.

public use, such as, waiting areas, seating spaces, coffee shops, display areas, merchandising departments, service areas, ticket counters and refreshment stands shall be accessible to all persons with disabilities. These shall also include facilities like, lobby toilets, lifts, saloons, bars, restaurants, eateries, clubs, swimming pool, parking, fitness centres/gymnasiums, religious facilities, sports facilities/parks and recreation areas, etc, within an occupancy.

c) In all buildings, accessible toilet and sanitary room(s) shall be provided in accordance with **B-9**. Such facility shall be provided in each toilet group in a building.

14 SPECIAL REQUIREMENTS OF LOW INCOME HOUSING IN URBAN AREAS

Special requirements of low income housing shall be as given in Annex C. For detailed information in this regard, reference may be made to the accepted standard [3(3)].

With the exception of requirements given in Annex C, requirements of building shall be governed by the provision of this Code.

15 SPECIAL REQUIREMENTS FOR CLUSTER PLANNING FOR HOUSING

Special requirements for cluster planning for housing shall be as given in Annex D. With the exception of requirements given in Annex D, requirements of building shall be governed by the provision of this Code.

16 SPECIAL REQUIREMENTS FOR LOW INCOME HABITAT PLANNING IN RURAL AREAS

Special requirements for low income habitat planning in rural areas shall be as given in Annex E. With the exception of requirements given in Annex E, requirements of building shall be governed by the provision of this Code.

17 SPECIAL REQUIREMENTS FOR DEVELOPMENT PLANNING IN HILLY AREAS

Special requirements for development planning in hilly areas is given in Annex F. With the exception of requirements given in Annex F, requirements of building shall be governed by the provision of this Code.

18 FIRE AND LIFE SAFETY

For requirements regarding fire and life safety for different occupancies, reference shall be made to Part 4 'Fire and Life Safety' of the Code.

19 DESIGN AND CONSTRUCTION

For requirements regarding structural design, reference shall be made to Part 6 'Structural Design' of the Code. For requirements regarding construction (including management and safety), reference shall be made to Part 7 'Construction Management, Practices and Safety' of the Code.

20 LIGHTING AND VENTILATION

20.1 For requirements regarding lighting and ventilation for different uses and occupancies, reference shall be made to Part 8 'Building Services', Section 1 'Lighting and Natural Ventilation' of the Code.

20.1.1 *Lighting and Ventilation of Rooms*

Rooms shall have, for the admission of light and air, one or more openings, such as windows and ventilators, opening directly to the external air or into an open *Verandah*.

20.1.2 Notwithstanding the area of openings obtained through **20.1**, the minimum aggregate area (*see* Notes 1 to 3) of such openings, excluding doors inclusive of frames, shall be not less than,

a) one-tenth of the floor area for hot-dry climate;

b) one-sixth of the floor area for warm-humid climate;

c) one-eighth of the floor area for temperate and composite climate; and

d) one-twelfth of the floor area for cold climate.

NOTES

1 If a window is partly fixed, the openable area shall be counted

2 No portion of a room shall be assumed to be lighted, if it is more than 7.5 m away from the opening assumed for lighting that portion.

3 The area of openings as given in (a) to (d) above shall be increased by 25 percent in the case of a kitchen [*see* **12.3.3**(d)].

21 ELECTRICAL AND ALLIED INSTALLATIONS (INCLUDING LIGHTNING PROTECTION OF BUILDINGS AND SOLAR ENERGY UTILIZATION)

21.1 For requirements regarding electrical installations in buildings including lightning protection of buildings, reference shall be made to Part 8 'Building Services Section 2 Electrical and Allied Installations' of the Code.

21.2 Solar Energy Utilization

The solar panels can be provided on roof tops and integrated photovoltaic panels on walls, windows as well as solar photovoltaic (PV) banks on open areas.

21.2.1 *Solar Photovoltaic Power Generation System*

All plots having size 500 m^2 and above shall install solar photovoltaic power generation system. This should also be encouraged for plots smaller than 500 m^2. The power generated may be used for in-house utilization or for transfer to the grid. The Authority shall have required provisions in the building bye-laws and mechanism for required clearances and approvals. The Authority shall also specify minimum generation requirement. The following may be used as a guide:

Sl No.	*Building Type*	*Plot Size*	*Generation Requirement*
(1)	(2)	(3)	(4)
i)	Residential (Plotted houses)	100 m^2 and above	1 kWp or 5 percent of connected load, whichever is higher
ii)	Residential (Group housing)	All sizes	Minimum 5 percent of connected load
iii)	Business, educational buildings having connected load of 30 kW and above	500 m^2 and above	5 kWp or 5 percent of connected load, whichever is higher
iv)	Mercantile, hotels, motels, assembly, industrial and institutional buildings	500 m^2 and above	for buildings having connected load of: a) *50-1 000 kW* — 10 kWp or 5 percent of connected load whichever is higher b) *Above 1 000 kW* — 50 kWp or 5 percent of connected load whichever is higher

21.2.2 *Solar Water Heating System*

The following building occupancy types shall install solar assisted water heating system for supplying hot water:

a) Residential buildings (except hostels of educational buildings and plotted houses) having plot area 4 000 m^2 and above;

b) Plotted houses having plot area of 250 m^2 and above;

c) Hostels for schools, colleges and training centres for more than 100 students;

d) Institutional buildings; and

e) Assembly buildings

The Authority shall have required provisions in the building bye-laws and mechanism for required clearances and approvals. The Authority, considering the availability of solar energy for harnessing, shall decide the minimum capacity be installed subject to a minimum of 25 litre per day hot water yield for each bathroom and kitchen.

For solar water heating system and their installation reference shall be made to accepted standards and good practice [3(4)].

22 AIR CONDITIONING, HEATING AND MECHANICAL VENTILATION

For requirements regarding design, construction and installation of air conditioning, heating and mechanical ventilation systems, reference shall be made to Part 8 'Building Services, Section 3 Air Conditioning, Heating and Mechanical Ventilation' of the Code.

23 ACOUSTICS, SOUND INSULATION AND NOISE CONTROL

For requirements regarding the desired noise levels and sound insulation in different occupancies, reference shall be made to Part 8 'Building Services, Section 4 Acoustics, Sound Insulation and Noise Control' of the Code.

24 HEAT INSULATION

For calculation of solar radiation on buildings and recommended limits of thermal transmittance of roofs and walls for different parts of the country and heat transmission losses due to different constructions, reference may be made to good practice [3(5)].

25 INSTALLATION OF LIFTS, ESCALATORS AND MOVING WALKS

Provision for lifts shall be made for buildings 15 m or more in height. For requirements regarding planning, designing and installation, etc, of lifts and escalators, reference shall be made to Part 8 'Building Services, Section 5 Installation of Lifts, Escalators and Moving Walks' of the Code.

26 INFORMATION AND COMMUNICATION ENABLED INSTALLATIONS

For requirements regarding information and communication enabled installations in buildings, reference shall be made to Part 8 'Building Services, Section 6 Information and Communication Enabled Installations' of the Code.

27 PLUMBING SERVICES (INCLUDING SOLID WASTE MANAGEMENT)

For requirements regarding water supply, drainage and sanitation, solid waste management and gas supply, reference shall be made to Part 9 'Plumbing Services (including Solid Waste Management)' of the Code.

28 SUSTAINABILITY

For requirements regarding sustainable buildings and built environment, reference shall be made to Part 11 'Approach to Sustainability' of the Code.

29 ASSET AND FACILITY MANAGEMENT

For requirements regarding asset and facility management in respect of existing buildings and services thereof, reference shall be made to Part 12 'Asset and Facility Management' of the Code.

ANNEX A

(*Clauses* 10.1 *and* 10.4)

OFF-STREET PARKING SPACES

A-1 The off-street parking spaces shall be as given in Table 9.

Table 9 Norms for Off-Street Parking Spaces

(*Clause* A-1)

Sl No.	Occupancy	One Car Parking Space for Every				
		Population Less than 50 000	Population Between 50 000 and 200 000	Population Between 200 000 and 1 000 000	Population Between 1 000 000 and 5 000 000	Population Above 5 000 000
(1)	(2)	(3)	(4)	(5)	(6)	(7)
i)	Residential a) Multi-family	—	—	a) 2 tenements having built-up area 101 to 200 m^2	1 tenement of 100 m^2 built-up area	a) 1 tenement of 75 m^2 built-up area
				b) 1 tenement of built-up area above 200 m^2		b) ½ tenement of built-up area above75 m^2
	b) Lodging establishments, tourist homes and hotels, with lodging accommodation	12 guest rooms	8 guest rooms	4 guest rooms	3 guest rooms	2 guest rooms
ii)	Educational (*see* Note 1)	—	—	70 m^2 area or fraction thereof of the administrative office area and public service areas	50 m^2 area or fraction thereof of the administrative office area and public service areas	35 m^2 area or fraction thereof of the administrative office area and public service areas
iii)	Institutional (Medical)	20 beds (Private) 30 beds (Public)	15 beds (Private) 25 beds (Public)	10 beds (Private) 15 beds (Public)	5 beds (Private) 10 beds (Public)	2 beds (Private) 5 beds (Public)
iv)	a) Assembly halls, cinema theatres	120 seats	80 seats	25 seats	15 seats	10 seats
	b) Restaurants	60 seats	40 seats	20 seats	10 seats	5 seats
	c) Marriage halls, community halls	600 m^2 plot area	400 m^2 plot area	200 m^2 plot area	50 m^2 plot area	25 m^2 plot area
	d) Stadia and exhibition centre	240 seats	160 seats	50 seats	30 seats	20 seats
	e) Sport complex (without stadium), parks and multipurpose open spaces	—	—	1 000 m^2 plot area	500 m^2 plot area	250 m^2 plot area
v)	a) Business offices and firms for private business	300 m^2 area or fraction thereof	200 m^2 area or fraction thereof	100 m^2 area or fraction thereof	50 m^2 area or fraction thereof	25 m^2 area or fraction thereof
	b) Public or semi-public offices	500 m^2 area or fraction thereof	300 m^2 area or fraction thereof	200 m^2 area or fraction thereof	100 m^2 area or fraction thereof	50 m^2 area or fraction thereof
vi)	Mercantile (*see* Note 2)	300 m^2 area or fraction thereof	200 m^2 area or fraction thereof	100 m^2 area or fraction thereof	50 m^2 area or fraction thereof	25 m^2 area or fraction thereof
vii)	Industrial	400 m^2 area or fraction thereof	300 m^2 area or fraction thereof	200 m^2 area or fraction thereof	100 m^2 area or fraction thereof	50 m^2 area or fraction thereof
viii)	Storage	—	—	500 m^2 floor area or part thereof	250 m^2 area or fraction thereof	125 m^2 area or fraction thereof

NOTES

1 In the case of auditoria for educational buildings, parking space shall be provided as per Sl No. (iv).

2 For plots up to 50 m^2, as in the case of shops, parking spaces need not be insisted upon.

3 For other institutions, transport/communication centre, parking space requirement shall be assessed based on the proposed building.

4 In case of permitted mixed residential-commercial or mixed residential-industrial areas the parking requirements shall be double the number for residential use.

5 The requirements specified in this table shall not be applicable for buildings meant for parking alone, including the multi-level car parking buildings which shall be as decided by the Authority.

6 Designated accessible parking spaces shall be provided in accordance with **B-3** for the occupancies specified in **13**.

ANNEX B

[*Clauses* 4.6.1.3(g), 13.3.1, 13.4 *and* 13.5]

ANTHROPOMETRICS AND REQUIREMENTS FOR ACCESSIBILITY IN BUILT-ENVIRONMENT FOR ELDERS AND PERSONS WITH DISABILITIES

B-1 ANTHROPOMETRICS

Adequate space should be allocated for persons using mobility devices, for example wheelchairs, crutches and walkers, white cane etc, as well as those walking with the assistance of others. The dimensions prescribed in **B-1.1** to **B-1.4** may be used for guidance while designing facilities and equipment to be used by persons with disabilities.

B-1.1 Mobility Devices and Space Allowance

B-1.1.1 *Wheelchair*

The basic elements of wheelchairs (manual, electric and any others) and terms and definitions for these elements are as defined in the accepted standard [3(6)]. Basic elements of a wheelchair (folding, adult size) are also shown in Fig. 12.

Wheelchair requirements are given in the accepted standards [3(7)].

B-1.1.1.1 Some of the dimensions of a standard wheelchair are extremely important and helps to arrive at requirements for space allowance, reach range, etc, of a wheelchair user. Electric wheelchair may be of a large dimension, much heavier and do not have the same manoeuvrability/capability as manual wheelchairs.

B-1.1.1.2 Manual wheelchair dimensions are as follows (*see* Fig. 12):

a) Overall length : 1 000 mm -1 100 mm
b) Overall width, open : 650 mm - 720 mm
c) Overall width, folded : 300 mm - 330 mm
d) Overall height : 910 mm - 950 mm
e) Seat height from floor at the front : 480 mm - 510 mm
f) Distance between seat and footrest : 400 mm - 450 mm
g) Arm rest height from seat : 220 mm - 230 mm
m) Seat depth : 420 mm - 440 mm
n) Clearance of foot-rest from floor : 90 mm - 200 mm
p) Clearance of frame from floor : 90 mm, *Min*
q) Wheelchair footrest : 350 mm (deep)
r) Wheelchair castor width : 12 mm
s) Weight of the wheelchair (basic model) : 25 kg, *Max*

The following form important considerations in deciding various space requirements to ensure functionality for wheelchair users:

1) Arm rest height from floor : 760 mm
2) Lap height : 675 mm

NOTE — The dimensions given above are from the point of view of better understanding and appreciation of various needs emanating therefrom. However, considering various aspects including diversity of population, stature, age, gender, etc, the

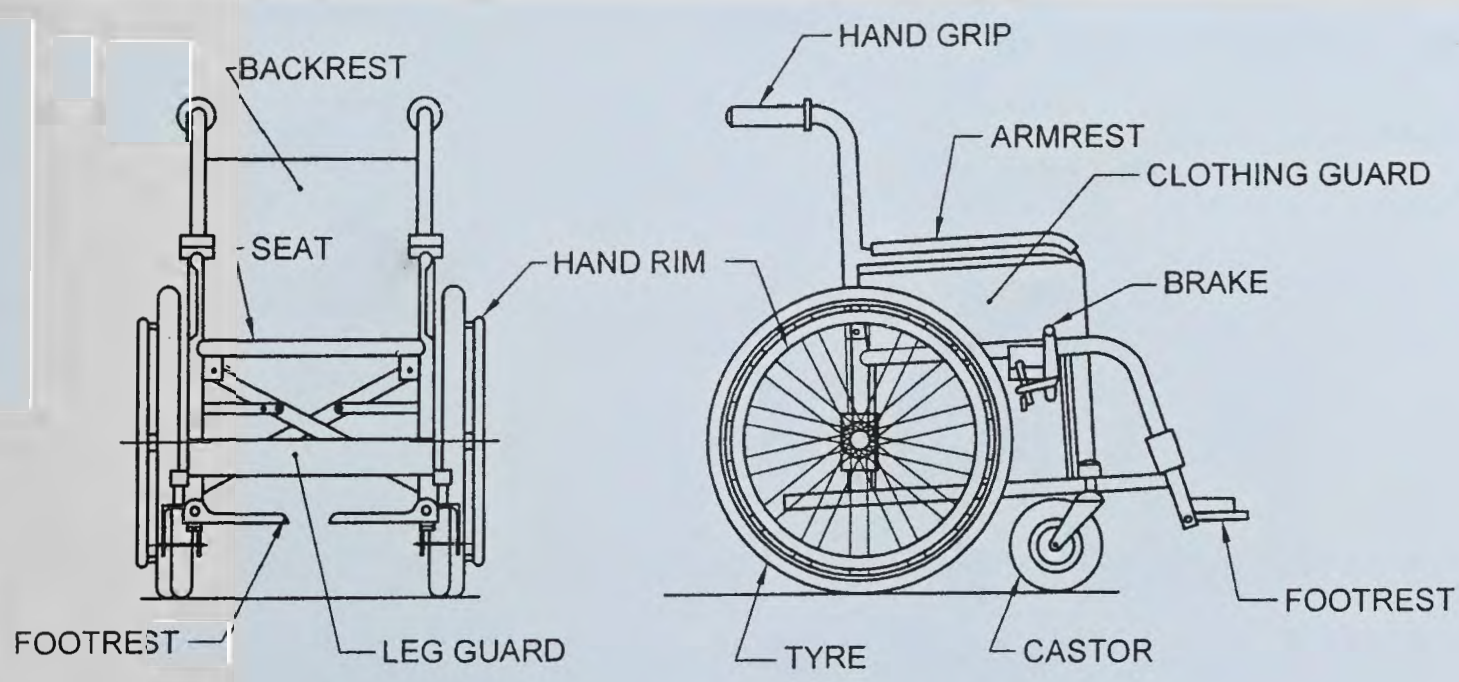

FIG. 12 NOMENCLATURE OF BASIC ELEMENTS OF WHEELCHAIR

dimensions and ranges thereof as may be applicable have been prescribed in these provisions given hereinafter.

B-1.1.1.3 A wheelchair has a footplate and leg rest attached in front of the seat. The footplate extends about 350 mm in front of the knee. The footplate may prevent wheelchair users from getting close enough to an object/site. Hence, at least 350 mm deep and 700 mm high space under a counter, stand, etc, shall be provided (*see* Fig. 13).

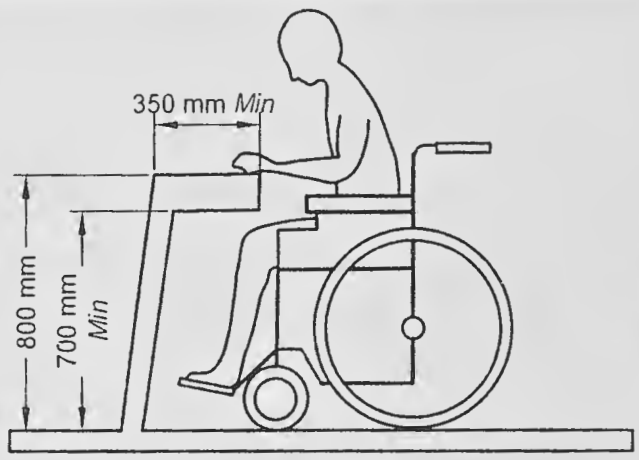

FIG. 13 NECESSARY SPACE UNDER COUNTER OR STAND FOR EASE OF WHEELCHAIR USERS

B-1.1.1.4 *Clear floor space for wheelchair user*

The minimum clear floor or ground area required for accommodating a single, stationary wheel chair and occupant is 900 mm × 1 200 mm (*see* Fig. 14). Where transfer from the wheelchair is involved, the clear space should preferably be 900 mm × 1 350 mm.

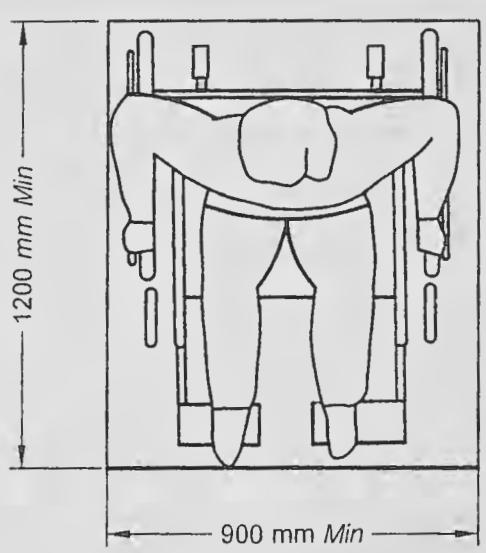

FIG. 14 CLEAR FLOOR SPACE

B-1.1.1.5 *Circulation dimensions*

The minimum clear floor ground area for a wheelchair to turn is 1 500 mm, whereas comfortable is 1 800 mm and it is ideal to provide 2 000 mm (*see* Fig. 15).

B-1.1.2 *Space Allowance for Crutch Users*

Although people who use walking aids can manoeuvre through door openings of 900 mm clear width, they

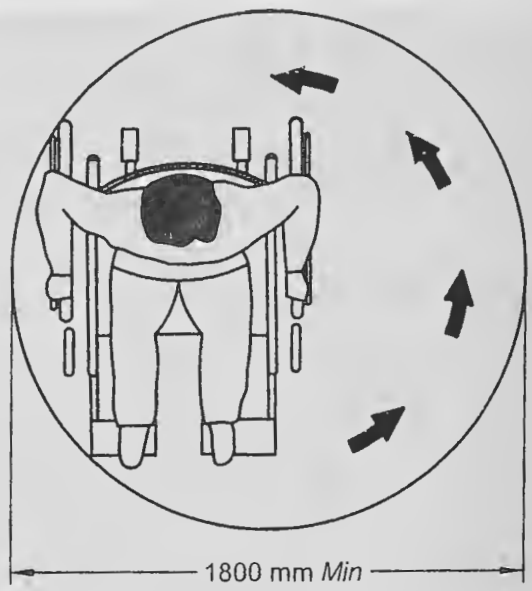

FIG. 15 PREFERRED COMFORTABLE TURNING RADIUS

need wider passageways for comfortable gaits as shown in Fig. 16. Crutch tips, often extend down out at a wide angle, and are hazardous in narrow passageways where they might not be seen by other pedestrians.

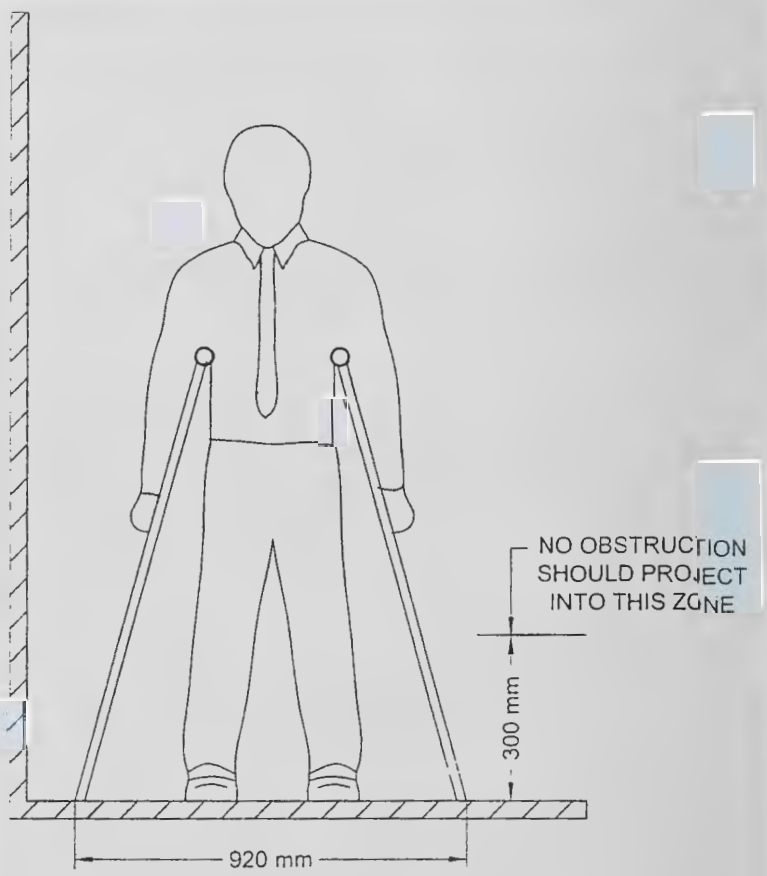

FIG. 16 PASSAGEWAY REQUIRED FOR PEOPLE WHO USES WALKING AIDS

B-1.1.3 *Space Allowance for White Cane Users*

Following shall be ensured for white cane users:

a) Protruding objects, such as directional signs, tree branches, wires, guy ropes, public telephone booths, benches and ornamental fixtures shall be installed with consideration of the range of the white cane of a person with vision impairment.

b) A barrier to warn blind or visually impaired person shall be provided under stairways or escalators so that they don't accidently enter

in to them.

c) Walkways, halls, corridors, passage ways, aisles, or other circulations spaces shall have clear headroom to minimize the risk of accidents.

d) Adequate space allowance should be made considering that the radial range of white cane is a band of 900 mm wide (*see* Fig. 17).

e) Any obstacle above 300 mm cannot be detected by the white cane. If there are projections above this height then the same has to be treated in accordance with **B-2.6.2**.

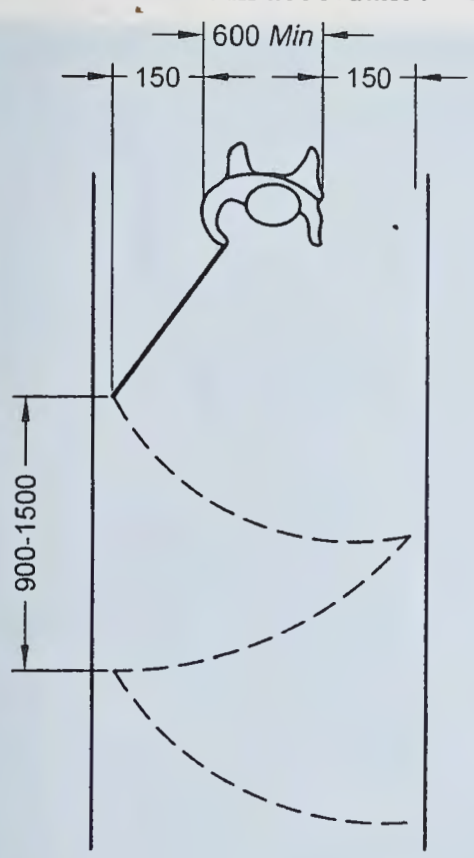

All dimensions in millimetres.

FIG. 17 SPACE ALLOWANCE (RADIAL RANGE) FOR PEOPLE USING WHITE CANES

B-1.2 Reach Range

A wheelchair user's movement pivots around its shoulders (*see* Fig. 18). The range of reach (forward and side; with or without obstruction) of a wheelchair users, as given in **B-1.2.1** to **B-1.2.3** shall be taken in to consideration.

B-1.2.1 *Forward Reach*

The maximum forward reach without obstruction is 1 200 mm from the floor and the minimum forward reach without obstruction is 400 mm from the floor as shown in Fig. 19.

The maximum forward reach over an obstruction is 1 000 mm from the floor as shown in Fig. 20, which also indicates the touch reach and grasp reach.

B-1.2.2 *Side Reach*

The maximum side reach without obstruction is 1 300 mm from the floor and the minimum side reach is 250 mm as shown in Fig. 21.

The maximum side reach over an obstruction of size 860 mm high × 500 mm deep is 1 200 mm from the floor as shown in Fig. 22, which also indicates the touch reach and grasp reach.

B-1.2.3 *Common Reach Zone*

As part of the common reach zone. the comfortable reach zone when seated on a wheelchair is between 900 mm and 1 200 mm and the maximum reach zone is between 1 200 mm and 1 400 mm (*see* Fig. 23).

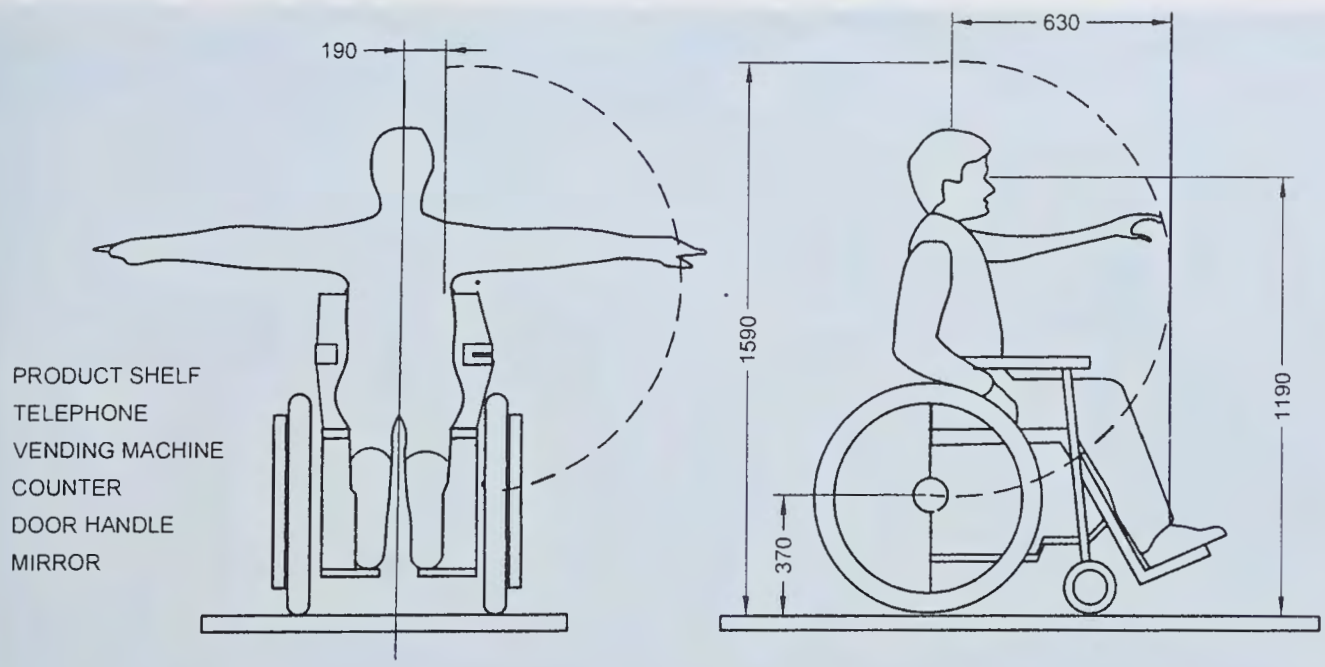

All dimensions in millimetres.

FIG. 18 RANGE OF REACH OF WHEELCHAIR USER

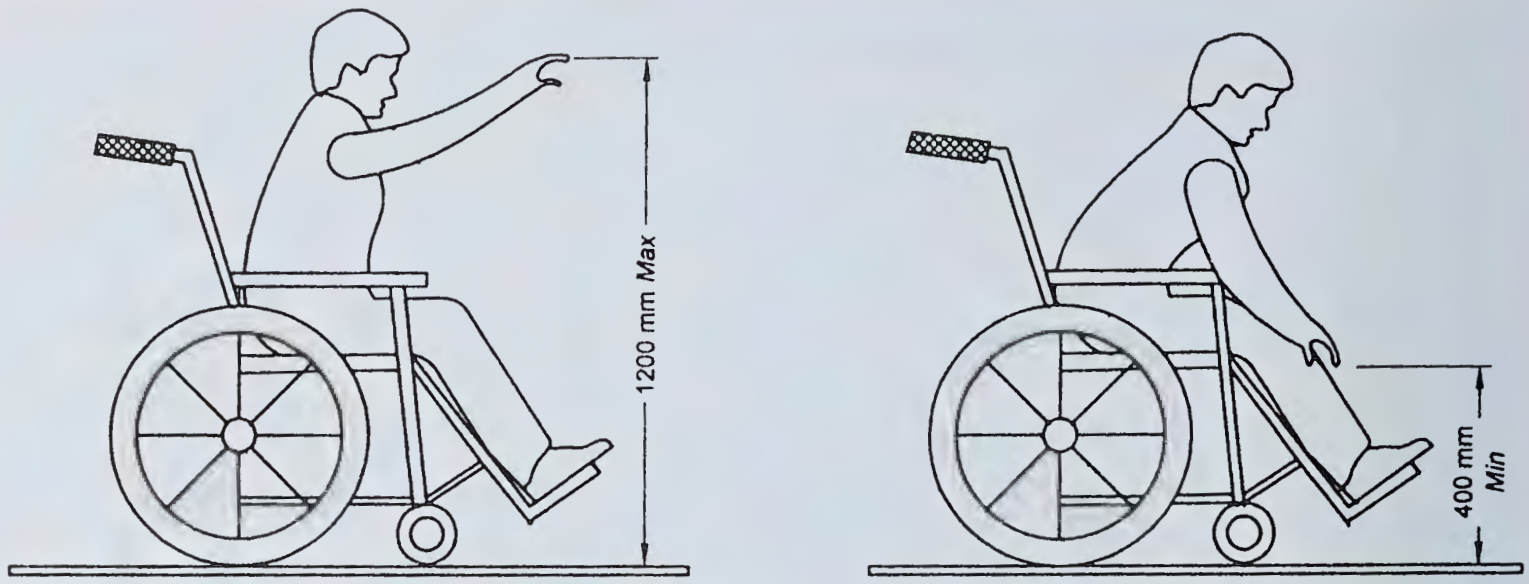

FIG. 19 FORWARD REACH WITHOUT OBSTRUCTION

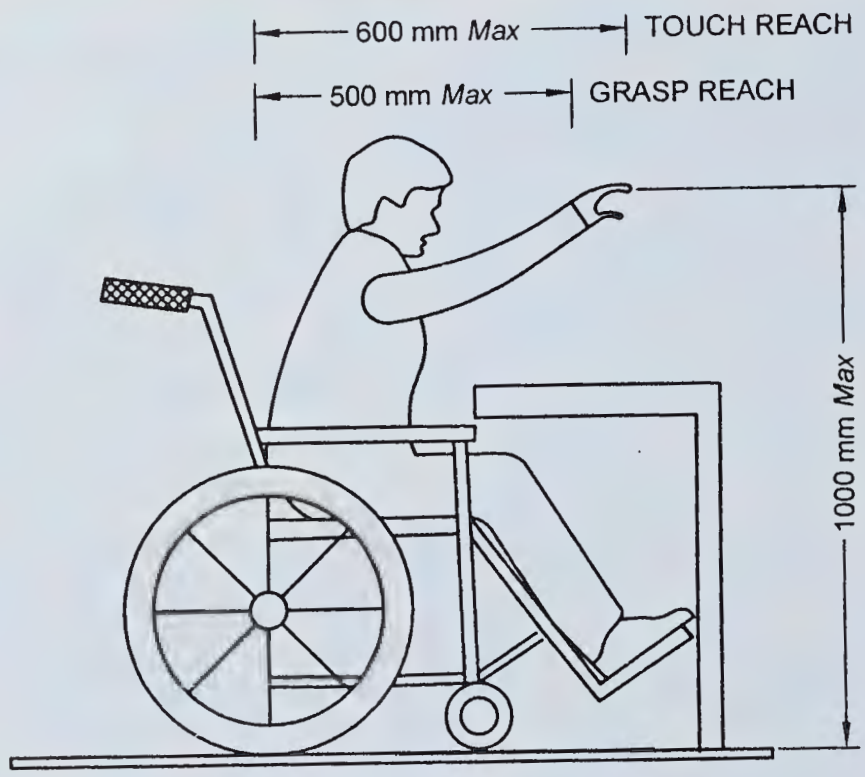

FIG. 20 FORWARD REACH OVER OBSTRUCTION

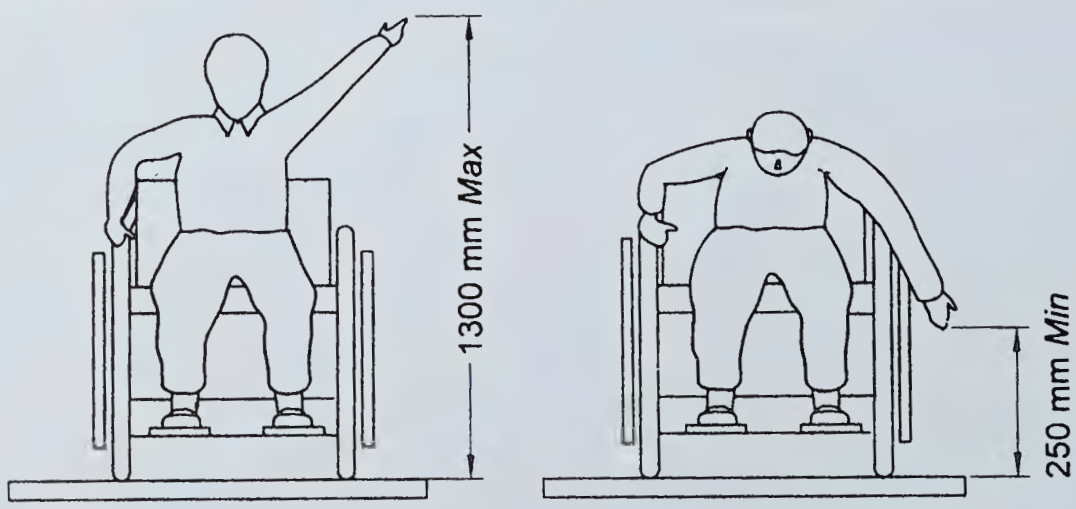

FIG. 21 SIDE REACH WITHOUT OBSTRUCTION

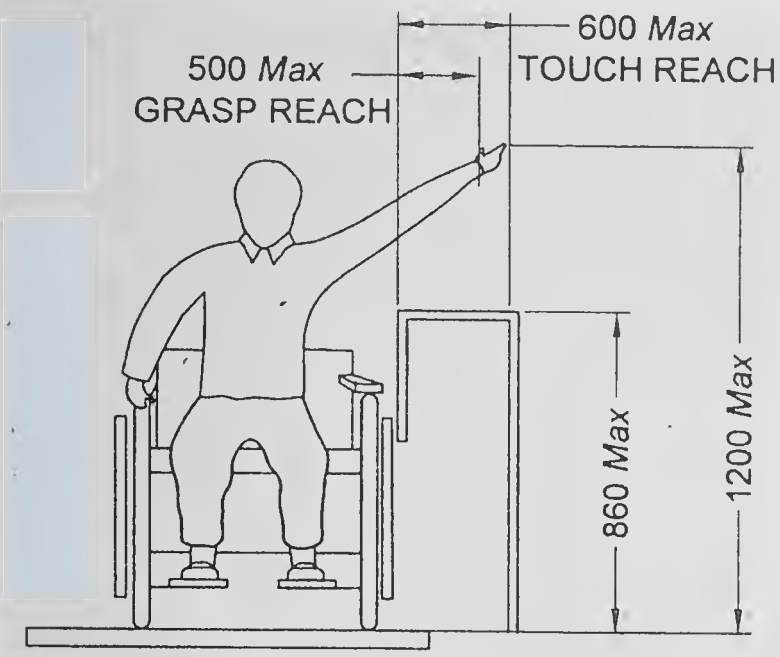

All dimensions in millimetres.

FIG. 22 SIDE REACH OVER OBSTRUCTION

B-1.3 Vision Zone

Different fields of vision are given in Fig. 24. All signage should be designed based on these dimensions.

Map and information panels along pathways shall be placed at a height between 900 mm and 1 800 mm (*see* Fig. 25).The smallest letter shall not be less than 15 mm.

B-1.4 Heights and Widths

B-1.4.1 *Wheelchair Users*

The average height of a person seated on a wheelchair is generally less than 1 200 mm.

B-1.4.2 *Standing Person*

The average height of a standing person is generally less than 2 000 mm.

B-1.4.3 *Height of Controls*

a)	Height of controls from floor level	: 400 mm - 1 200 mm
b)	Height for switches (power)	: 400 mm - 500 mm
c)	Height for switches (lights)	: 800 mm - 1 200 mm
d)	Height of door handles	: 800 mm - 1 100 mm
e)	Opening controls for windows	: 800 mm - 1 100 mm
f)	Space required under the counter for wheelchair footrest	: 350 mm deep

B-1.4.4 *Entrance/Exit Door*

a)	Minimum width of entrance/ exit door (*see* Fig. 43)	: 900 mm
b)	Minimum front approach doorways space (*see* Fig. 44 and Fig. 45)	: 600 mm
c)	Minimum latch side approach doorways space (*see* Fig. 44)	: 1 250 mm

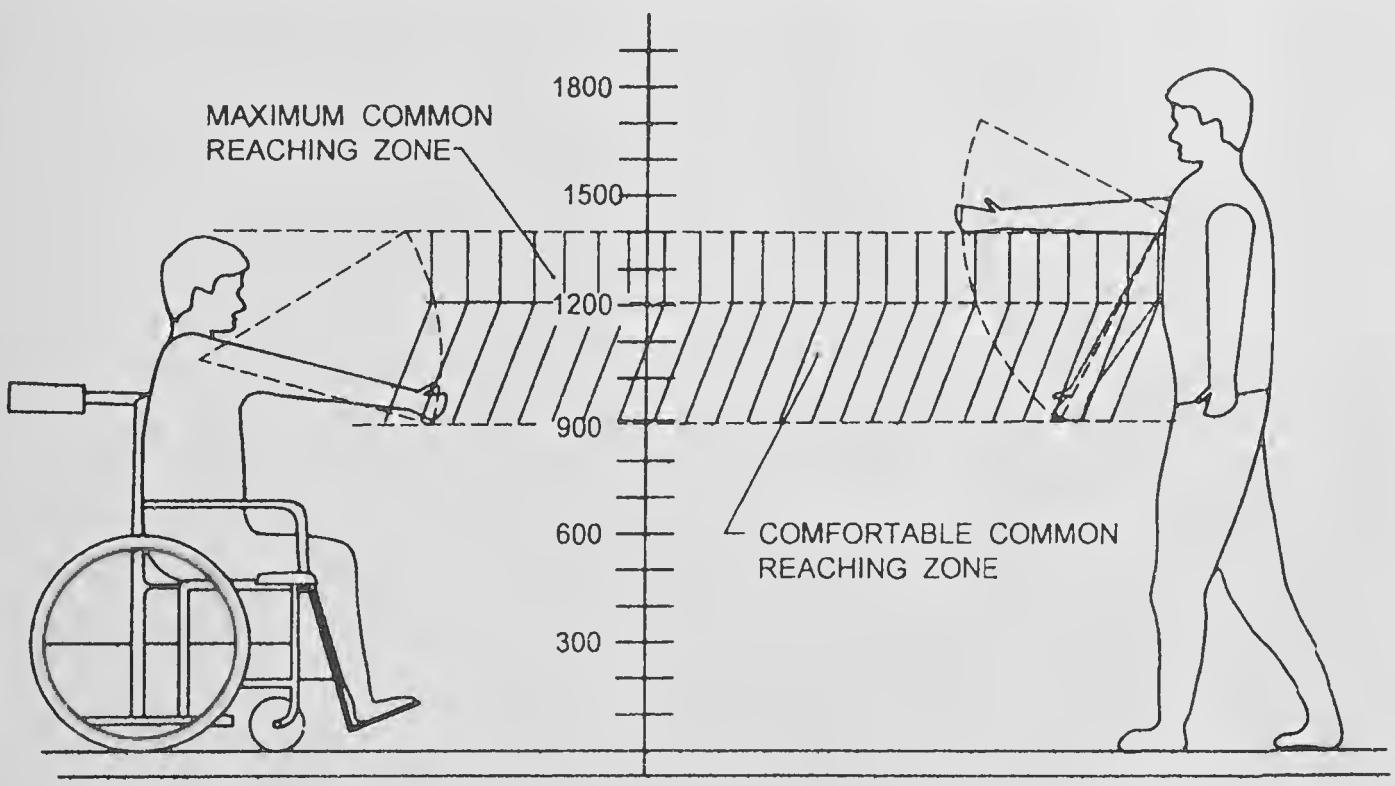

All dimensions in millimetres.

FIG. 23 COMMON REACHING ZONE

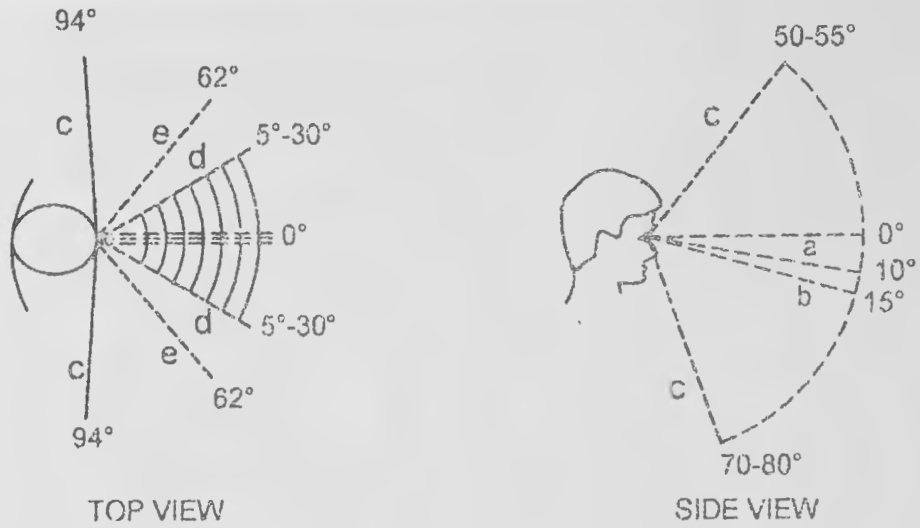

Key

a Normal optical axis, standing person
b Normal optical axis, sitting person
c Limit of field of vision
d Normal angle of vision
e Maximum angle of vision

FIG. 24 FIELD OF VISION

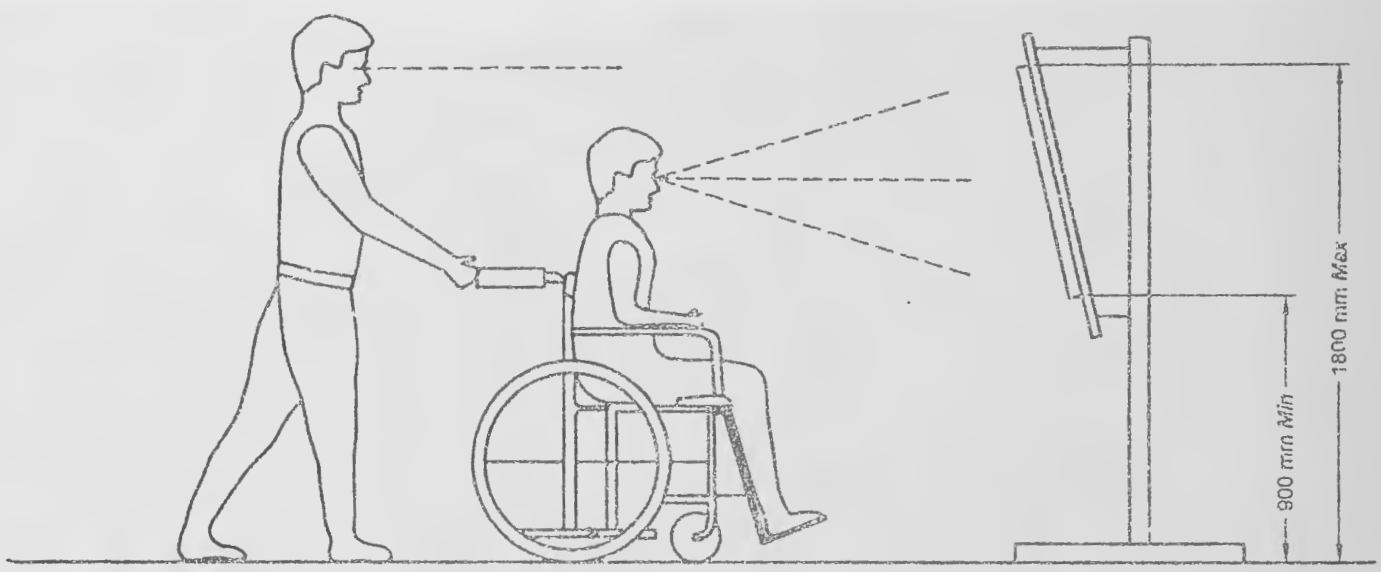

FIG. 25 VISION ZONE

B-2 SITE PLANNING AND DEVELOPMENT

B-2.1 General

Site development is the most effective means to resolve the problems created by topography, definitive architectural designs or concepts, water table, existing streets, and typical problems, singularly or collectively, so that ingress and egress to buildings by persons with disabilities can be facilitated while preserving the desired design and effect of the architecture. Each building and its site shall be planned and designed as an integral unit from the very beginning of the design process. Equipment and materials causing allergic reactions shall as far as possible be avoided in dwellings and buildings.

The provisions of accessibility in outdoor built environment covered herein pertain to the immediate outdoor environment of a building or of a building complex. However, these may be considered by the Authorities and concerned parties for suitably applying the same at township/city level.

B-2.2 Walkways and Pathways

B-2.2.1 *General*

Walkways and pathways (used here interchangeably) shall meet the following general requirements:

a) Walkways shall be smooth, hard and have levelled surface suitable for walking and wheeling. Irregular surfaces as cobble stones, coarsely exposed aggregate concrete, bricks, etc. often cause bumpy rides and shall be avoided.

b) Minimum walkway width shall be provided as per **B-2.2.2**. The width of footpath shall be in accordance with **4.3.2.1.1**.

c) The walkway shall not have a gradient exceeding 1:20. If the slope or any part of a walkway on an accessible route to a building exceeds 1:20, it shall be designed and constructed as a ramp in accordance with **B-6.2**.

d) Where pathway meets the road, a kerb shall be provided; which shall be designed in accordance with **B-2.3**.

e) The cross-fall gradient across an accessible route shall not exceed 1:50 (20 mm/m), except when associated with a dropped kerb.

f) The requirements for drainage of pathways shall be as per **B-2.2.5**.

g) When walkways exceed 60 m in length, it is desirable to provide rest area adjacent to the walk at convenient intervals of 30 m in the form of benches/resting seats. For comfort, seat height shall be between 450 mm and 500 mm, and the seating shall have a back rest and arm rests at 700 mm height. One side of seating may be without arm rest to address the transfer needs of persons with disabilities. A colour contrast should be provided around the seating area for ease of identification by persons with low vision.

h) Texture change in walkways adjacent to seating shall be provided for persons with vision impairment by means of warning blocks (*see* **B-2.5**).

j) Gratings and manholes should be avoided in walks.

k) Walks or driveways shall have a non-slip surface. Care shall be taken to ensure that adjacent surface materials do not display different slip resistance characteristics, particularly at the edges of changes of level or gradients.

m) Such walks shall be of a continuing common surface not interrupted by steps or abrupt changes in level.

n) Wherever walks cross other walks, driveways, or parking lots, they shall blend to a common level.

p) Obstacles, such as objects or signs mounted on walls, columns or free-standing supports along the walking path shall be avoided. These shall however be regulated in accordance with **B-2.6.1**. Bollards along or on the walking pathway shall also be regulated in accordance with **B-2.6.1**. Any protruding object projecting into a walkway shall be treated in accordance with **B-2.6.2**.

B-2.2.2 Width of the Walkway/Pathway

B-2.2.2.1 The unobstructed width of the pathway shall be,

a) not less than 1 800 mm for two-way traffic (*see* key 1 of Fig. 26); which may be reduced to a minimum of 1 500 mm, provided that a passing and turning space of at least 1 800 mm × 2 000 mm should be provided for every 25 m (*see* keys 2 and 5 of Fig. 26); and

b) not less than 1 200 mm for one-way traffic (*see* key 3 of Fig. 26); which may be reduced to a minimum of 1 000 mm, provided that a passing and turning space of at least 1 800 mm × 2 000 mm should be provided for every 25 m (*see* keys 4 and 5 of Fig. 26).

B-2.2.2.1.1 The width of footpath shall be in accordance with **4.3.2.1.1**.

B-2.2.2.2 *Passing space for wheelchair users*

A path whose surface width is less than 1 800 mm (*see* **B-2.2.2.1**) and whose overall length is more than 50 m, shall be provided with a passing place or places. Passing places should be a maximum of 25 m apart. This does not apply to a landing forming part of a sloped path, a ramp, steps or a stair.

Passing place for two people using wheelchairs shall be a minimum width of 1 800 mm for a minimum length of 2 000 mm (*see* examples in Fig. 27).

NOTE — Passage widening can be associated with intersections, turns and doorways so as to appear as integrated design features or enhancements.

B-2.2.2.3 For wheelchair manoeuvrability at turnings, minimum turning radius shall be required in accordance with **B-5.2.3** and **B-5.2.4**.

B-2.2.3 *Stepped Path and Stair*

For ambulant people, a stepped path can provide a safer and more assuring means of access than a sloped path or a ramp. Wherever the rise of a ramp exceeds 300 mm, an additional flight of steps shall also be provided. An isolated single step is not acceptable. Where required on a continuous accessible path of travel, tactile warning indicators shall be located at both the top and bottom of stairways. The surface width of a stepped path and stair shall be not less than 1 200 mm and it shall meet the other requirements of **B-6.3**.

B-2.2.4 *Support and Guidance by a Handrail on Paths*

Support and guidance by a handrail shall be provided on stepped paths. A handrail shall be provided on each

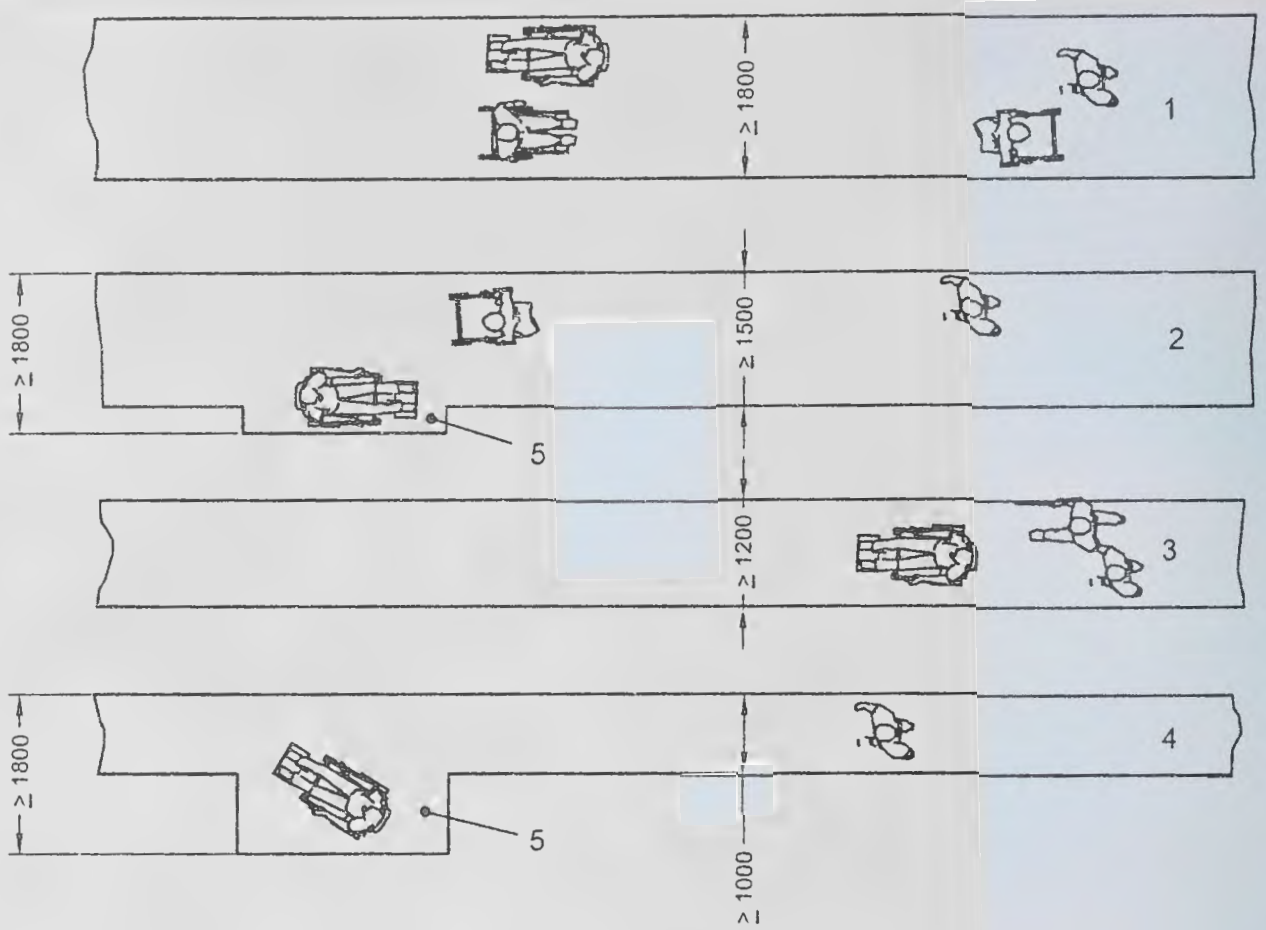

Key

1 and 2 For two-way traffic

3 and 4 For one-way traffic

5 Passing and turning space every 25 m (only acceptable for wheelchair users under exceptional circumstances)

All dimensions in millimetres.

FIG. 26 DIFFERENT SURFACE WIDTHS OF THE PATH DEPENDING ON TRAFFIC

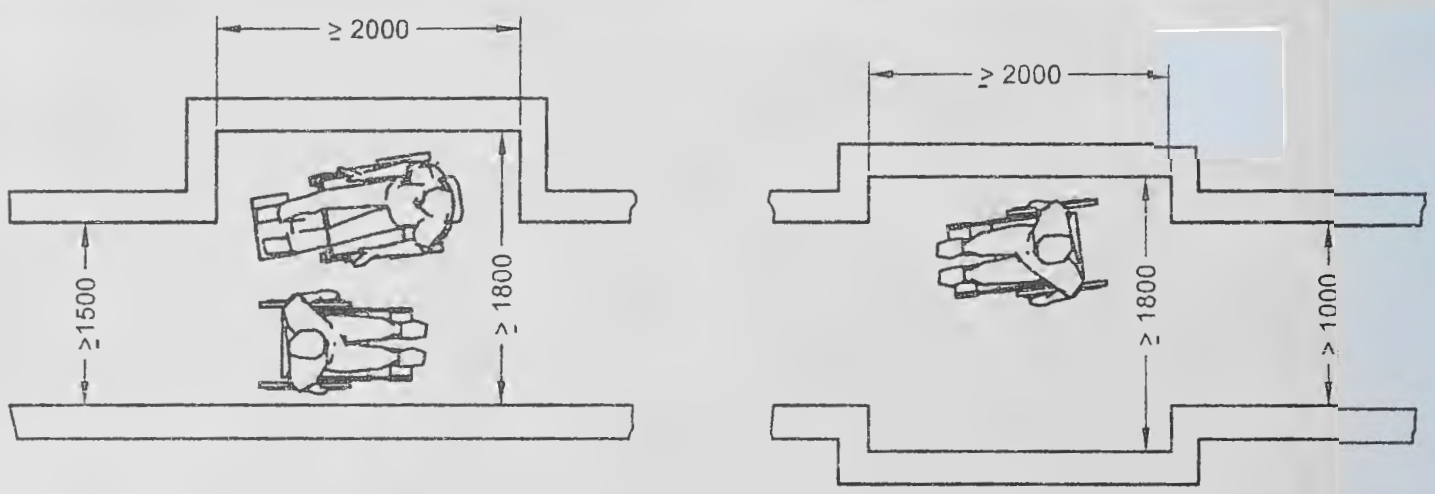

All dimensions in millimetres.

FIG. 27 EXAMPLES FOR PASSING PLACES FOR WHEELCHAIR USERS

side of a flight of steps consisting of two or more risers and each riser shall be not more than 150 mm high. A handrail shall be provided on both sides of a channel that can subdivide a flight of steps. For requirements of handrails, reference shall be made to **B-5.5.2**.

B-2.2.5 *Drainage of Path/Access Routes*

The cross-fall of a level or sloped path, a stepped path, a ramp, or a landing, that is provided to permit drainage of surface water, shall be in accordance with **B-2.2.1**(e).

The top, bottom and landings of steps and ramps shall be properly drained in order to avoid water flowing down steps and ramps.

A dished channel should not be constructed within the boundaries of a path or ramp. Dished channels shall have a maximum width of 150 mm and a maximum drop into gulley of 5 mm.

A drainage grating that is within the boundaries of a path or a ramp shall be set flush with the surface (*see* **B-2.4**).

B-2.2.6 *Guarding along Paths and Ramps*

Providing protection at the side of the path protects people who use wheelchairs and ambulant people from injuring themselves as the result of a fall. Examples of protection against falling are shown in Fig. 28.

a) If a level or sloped path is bounded on one or both sides by terrain that slopes downwards by up to 30° from the horizontal, a firm and level margin of at least 600 mm shall be provided at the relevant side or sides.

b) If a sloped path or ramp is bounded on one or both sides by terrain that slopes downwards by more than 30°, an upstand of minimum height of 150 mm shall be provided at the relevant side or sides. Upstands shall have a minimum difference in LRV of 30 points in relation to the ramp.

c) If a path, or a sloping path, stepped path, ramp, terrace or other unfenced platform rises more than 600 mm above the adjacent ground, it shall be provided with guarding. If the adjacent ground is firm and level with the path for 600 mm, no guard is needed.

Guarding shall be designed to discourage a user, particularly a child, from climbing on it.

B-2.3 Kerb Ramp/Dropped Kerb

B-2.3.1 *General*

It is a ramp built on a footpath or pavement to accommodate the change in level towards vehicular areas to allow easy and continuous access. Kerb ramps shall be provided at pedestrian crossings and at each end of the footpath of a private street or access road.

Kerb ramps shall be provided where the vertical rise is less than 150 mm. They shall meet the following requirements:

a) They shall have a slip-resistant surface.

b) They shall avoid raised traction strips in order to reduce the hazard to everyone.

c) They shall be designed not to allow water accumulating on the walking surface.

d) Handrails may not be provided with kerb ramps.

e) They shall not project into the road surface.

f) They shall be so located and also protected to prevent obstruction by parked vehicles.

g) They shall be free from any obstruction such as signposts, traffic lights, etc.

h) They shall not encroach into a roadway, as it is dangerous for users and obstructive for vehicles.

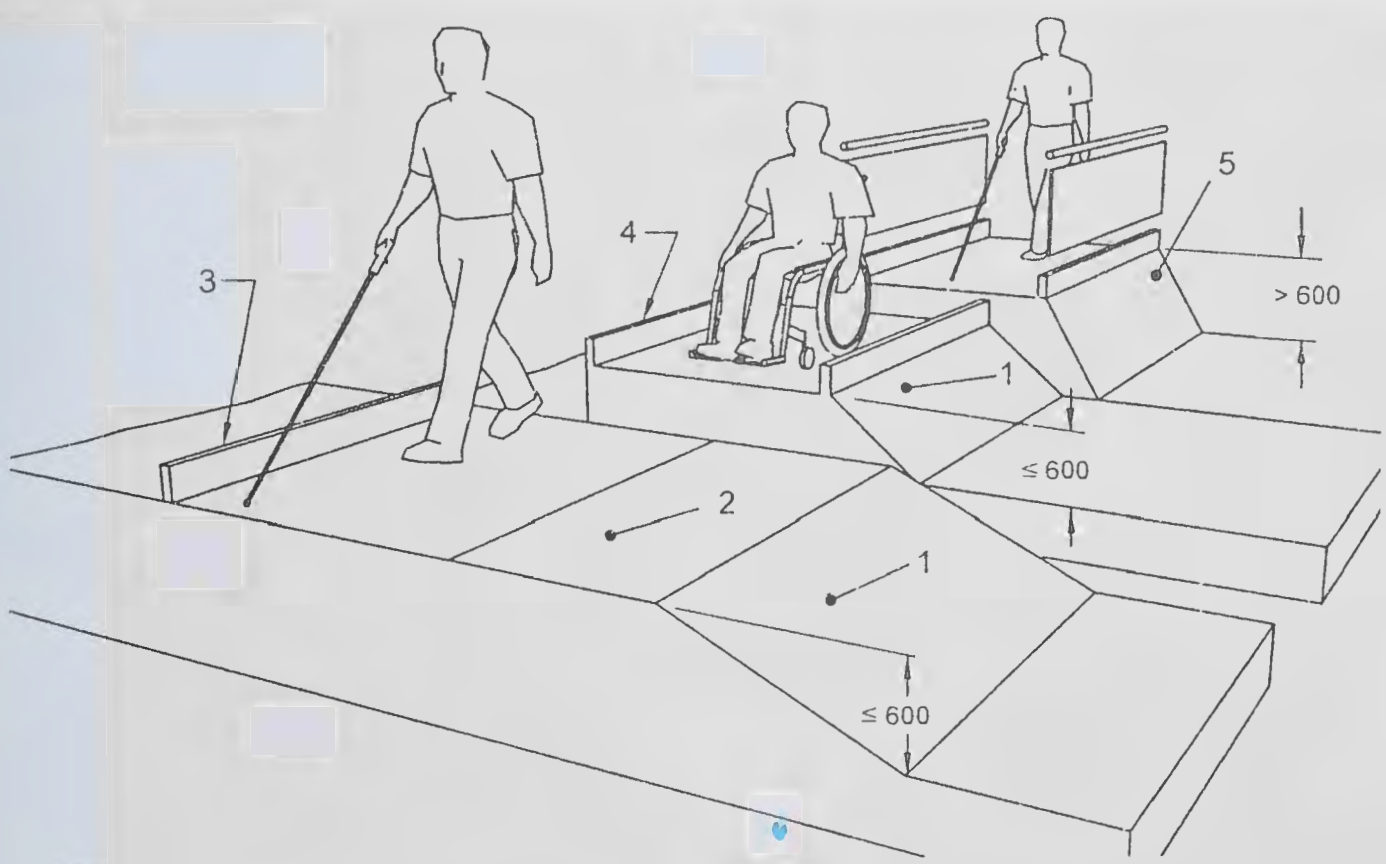

Key

1 Downward slope less than 30°

2 Level margin minimum 600 mm wide

3 Upstand where the difference in level is 600 mm or less

4 Upstand with a minimum difference in LRV of 30 points in relation to the path or ramp

5 Upstand with guarding where the difference in level is greater than 600 mm

All dimensions in millimetres.

FIG. 28 EXAMPLES OF PROTECTION AGAINST FALLING

j) They shall be so located to enable users to have an unobstructed view of traffic approaching from any direction.

k) They shall be provided with adequate visual and tactile warning.

m) TGSI (warning type) shall be provided to notify the presence of traffic and shall have a minimum luminous contrast of 70 percent with the adjoining surfaces for the elderly and persons with visual impairment.

Typical kerb ramp requirements and kerb extension at street intersections are shown in Fig. 29 and Fig. 30.

B-2.3.2 *Gradient*

The gradient of a kerb ramp shall not be steeper than 1:12.

B-2.3.3 *Width*

The kerb ramp shall not be less than 1 200 mm in width. It shall provide a clearance of at least 800 mm at the back of the kerb ramp on the footpath (*see* Fig. 29).

B-2.3.4 *Flared Sides*

Kerb ramps shall have flared sides where pedestrians are likely to walk across them as shown in Fig. 29 and the gradient of the flared side shall not be steeper than 1:10.

B-2.4 Levels, Grooves, Gratings and Manholes

B-2.4.1 *Passing over Different Levels and Grooves*

Vertical level changes up to 6 mm may not need edge treatment. Changes in level between 6 mm and 12 mm shall be levelled off with a slope no greater than 1:2. The edge shall be rounded off or bevelled.

B-2.4.2 *Gratings and Manholes*

Gratings and manholes should be avoided on walkways/pathways. If unavoidable, gratings shall have spaces not greater than 12 mm wide in one direction to prevent a wheelchair from getting its casters caught in a drainage ditch or grating cover. Also, the grating bars shall be perpendicular to the travel path in such a way that its longer dimension is perpendicular to the dominant direction of movement. Grating shall be flushed with finished ground level and shall be treated with a non-slip finish (*see* Fig. 30).

B-2.5 Tactile Ground Surface Indicators (TGSI) — Tactile Guiding and Warning Blocks

Tactile ground surface indicators or tactile guiding and warning tiles/blocks aid blind and vision impaired pedestrians negotiate the built environment, and shall be of the dimensions as given in Fig. 31.

NOTE — Alternatively, other internationally accepted tactile pattern may be accepted by the Authority.

B-2.5.1 Tactile guiding blocks indicate a correct path/route to follow for a person with visual impairment. It is recommended to install one/two rows of tactile guiding blocks along the entire length of the proposed accessible route. Care shall be taken to ensure that there are no obstacles, such as trees, poles or uneven surfaces, along the route traversed by the guiding blocks. Also, there shall be clear headroom of at least 2 100 mm height above the tactile guiding blocks, free of protruding objects such as overhanging tree branches and signage, along the entire length of the walk.

B-2.5.2 Tactile warning blocks indicate an

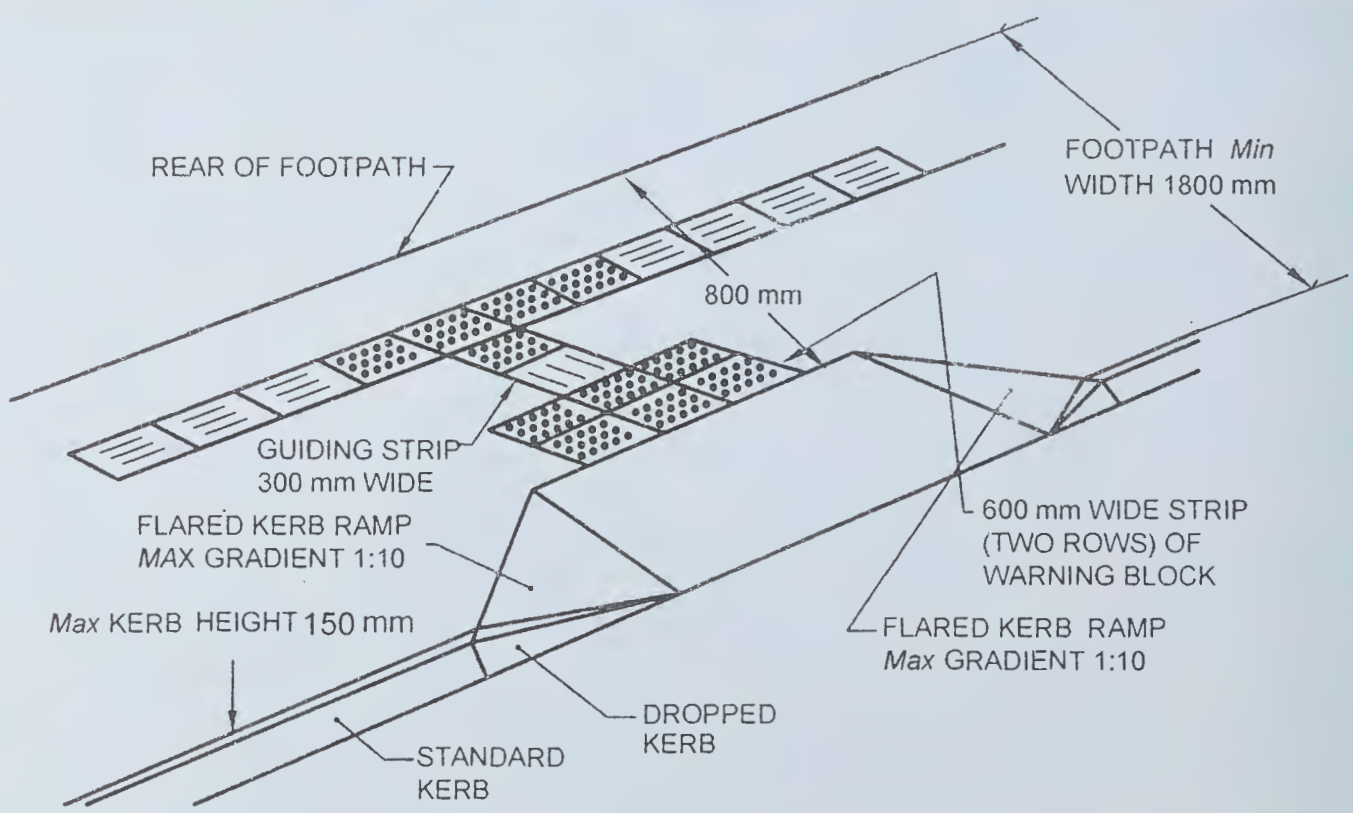

FIG. 29 KERB EXTENSION AT STREET INTERSECTION

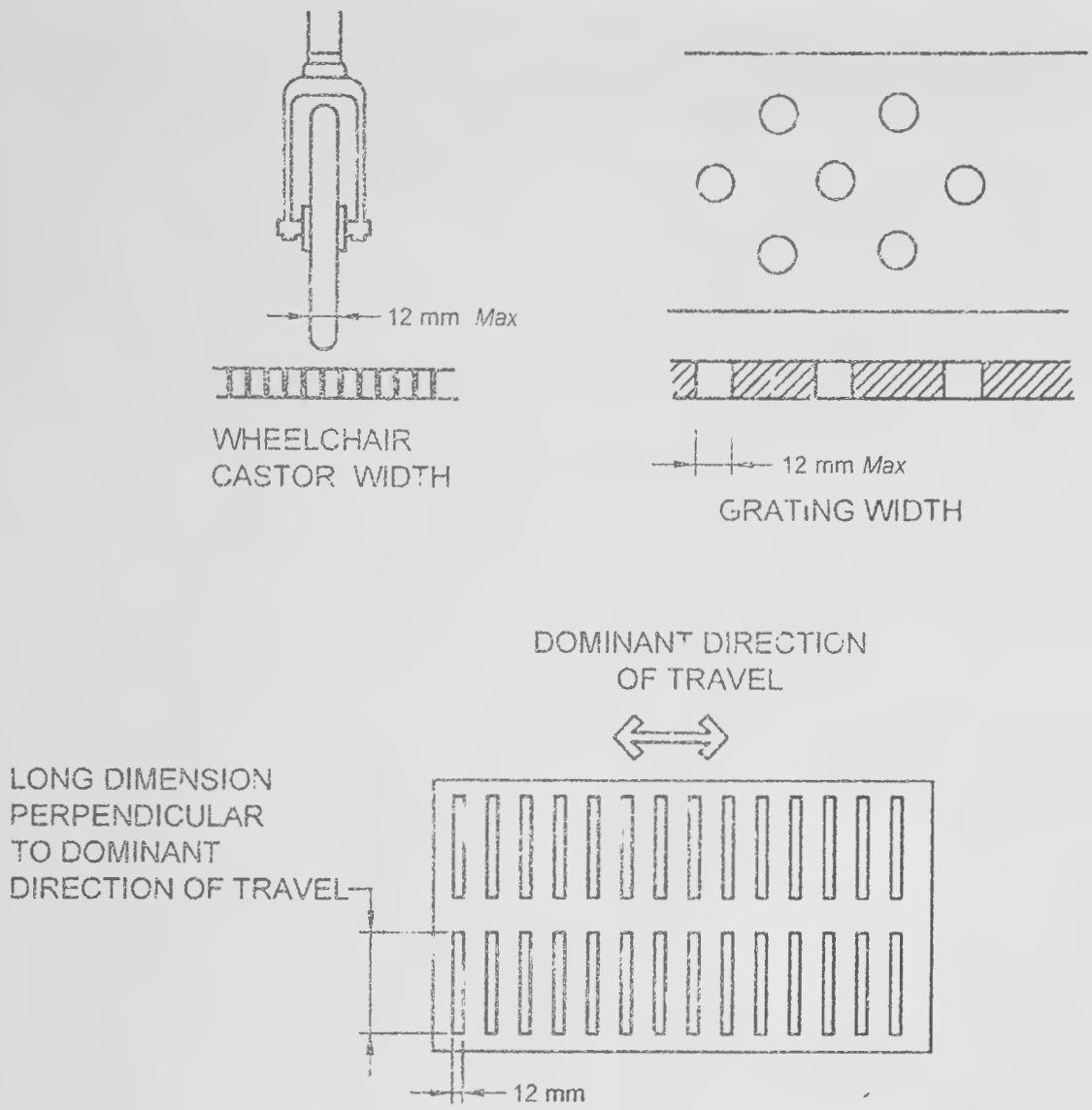

FIG. 30 INSTALLATION OF GRATING

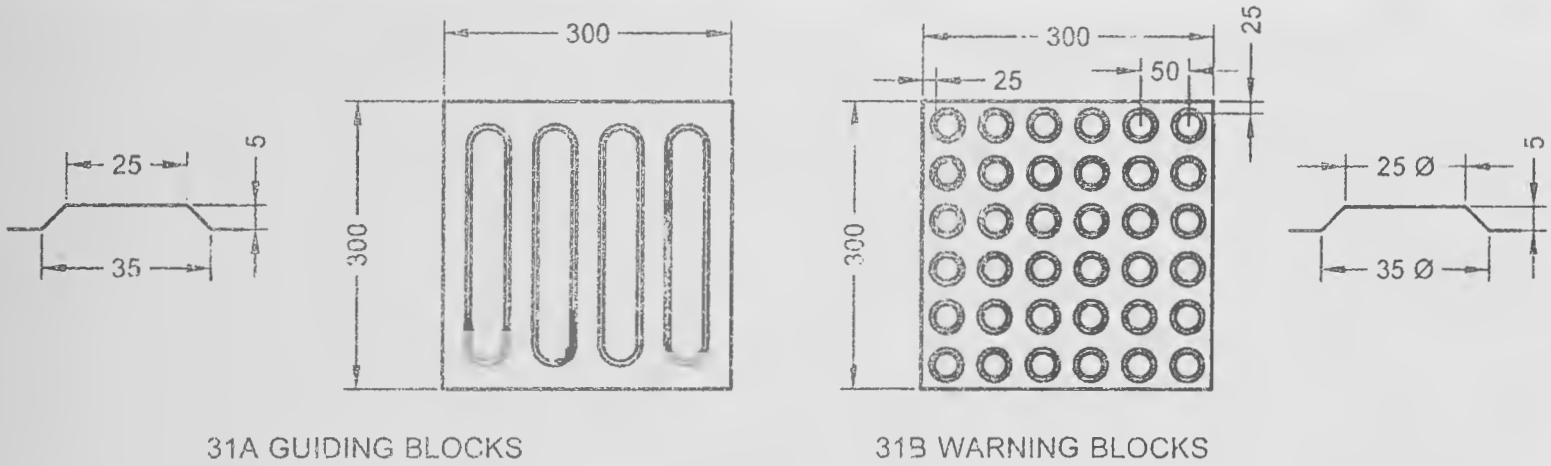

All dimensions in millimetres.

FIG. 31 TACTILE GROUND SURFACE INDICATORS (TGSI)

approaching potential hazard or a change in direction of the walkway, and serve as a warning of the approaching danger to persons with visual impairments, preparing them to tread cautiously and expect obstacles along the travel path, traffic intersections, doorways, etc. They are used to screen off obstacles, drop-offs or other hazards, to discourage movement in an incorrect direction, and to warn of a corner or junction. Two rows of tactile warning tiles shall be installed across the entire width of the designated accessible pathway, before intersections, building entrances, level changes, obstacles such as trees, and each time the walkway changes direction. Warning blocks shall be placed 300 mm from the beginning and end of the ramps and stairs, at landings and entrance to any door.

B-2.5.3 *Places to Install TGSI* (*see* Fig. 32 *and* Fig. 33)

TGSI shall be installed at following places:

a) In open space to orient persons with vision impairment;

b) In front of an area where traffic is present;

c) In front of an entrance/exit to and from a ramp, staircase or multi-level crossing facility;

d) Entrances/exits at public transport terminals

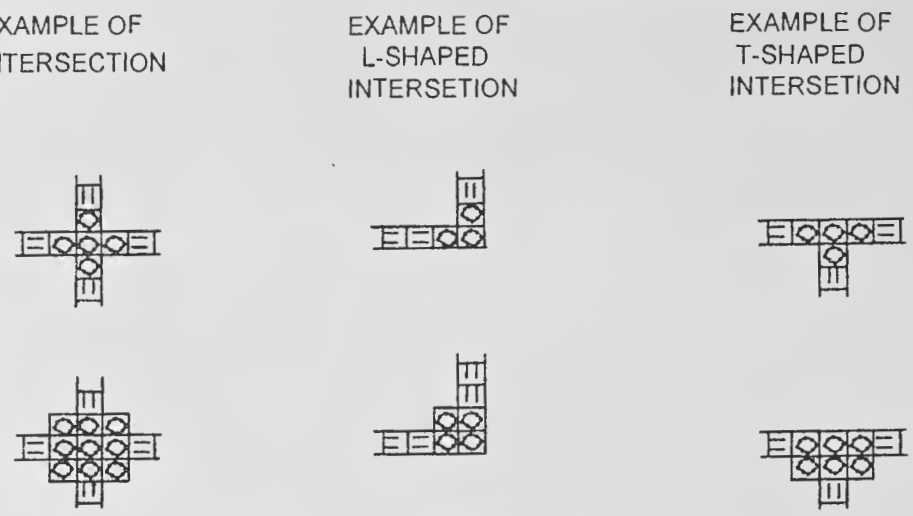

32A ARRANGEMENT OF GUIDING BLOCKS FOR PERSONS WITH VISUAL IMPAIRMENT

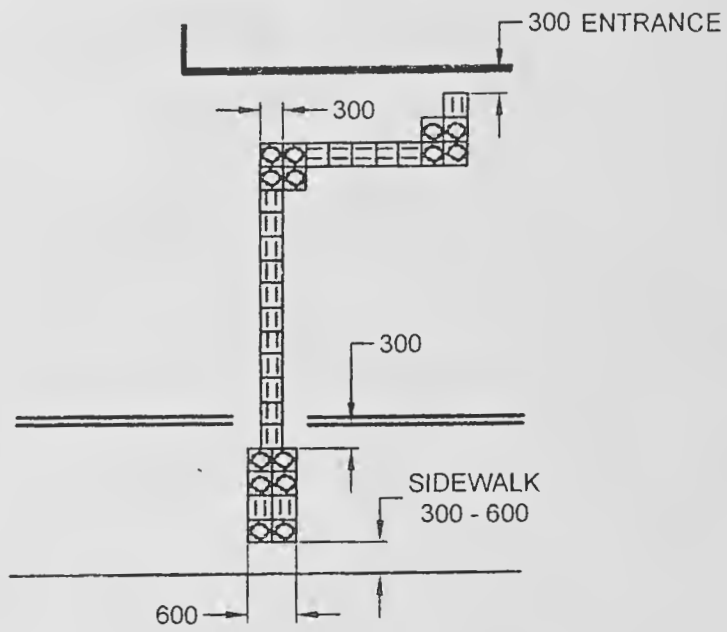

All dimensions in millimetres.

32B GUIDING PATH AND APPROACHING SIDEWALK TO THE BUILDING

FIG. 32 INSTALLATION OF TGSI

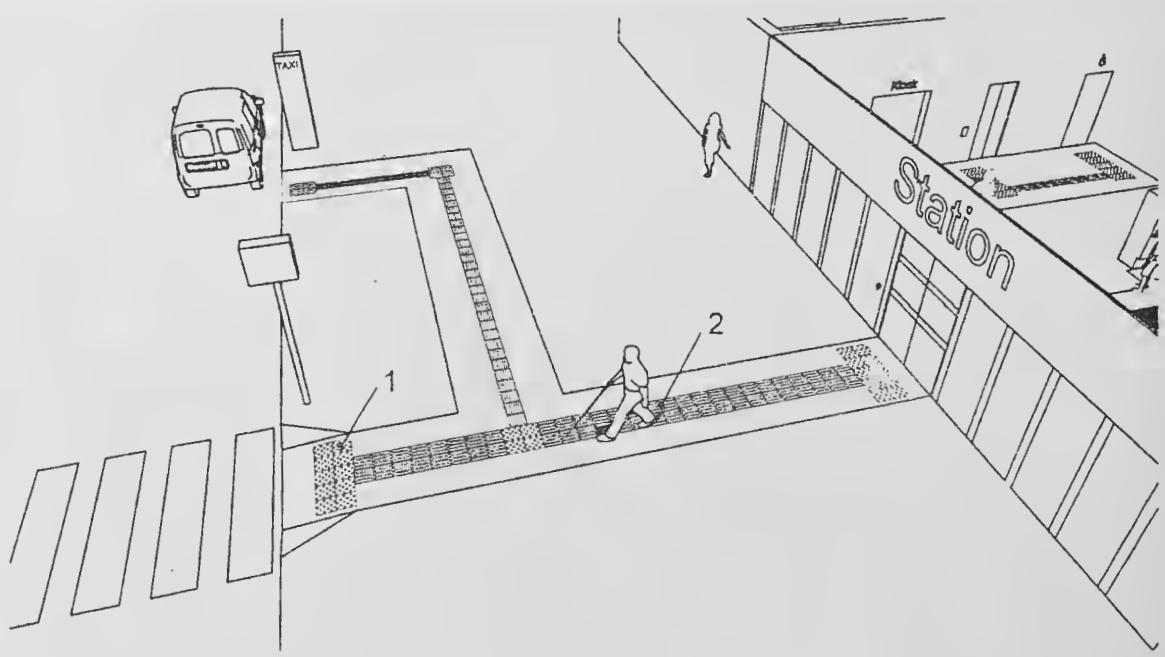

Key

1 Tactile ground surface indicator as attention pattern for decision points or hazards

2 Tactile ground surface indicator as guiding pattern

FIG. 33 EXAMPLE OF TACTILE GROUND SURFACE INDICATORS USED IN OPEN AREAS

or boarding areas;

e) Sidewalk/footpath section of an approach road to a building; and

f) From a public facility to the nearest public transport station.

B-2.6 Barriers and Hazards

B-2.6.1 Obstacles, such as objects or signs mounted on walls, columns or free-standing supports along the walking path shall be avoided. Unavoidable free standing posts or columns within access routes on pathways shall leave at least unobstructed walking width of 1 000 mm and be clearly marked with visual indicators. Visual indicators at least 75 mm in height with a minimum visual contrast of 30 points difference in the LRV value of the colours to the background shall be placed; one at a height between 800 mm and 1 000 mm above floor level, and the other between 1 400 mm and 1 600 mm above floor level.

Bollards, short vertical posts generally arranged in a line to guide traffic and protect from vehicle intrusions, shall have a maximum height of 1 000 mm. Bollards, where installed within the access route shall have a minimum clear spacing between them of 1 000 mm so as to provide clear passage width for movement of wheelchairs.

B-2.6.2 *Protruding Objects*

Unavoidable protruding objects shall not reduce the minimum clear width of an accessible route or manoeuvring space. Protruding objects in the access route shall contrast visually with the background environment.

Objects with a height lower than 1 000 mm can create a hazard for blind or partially sighted people. Permanent equipment that cannot be located outside the boundaries of a path shall be,

a) designed to be easily seen with a minimum difference in LRVs of 30 points to the background;

b) shielded to protect against impact; and

c) accompanied by a feature that warns of the presence of a potential hazard and is detectable for a person using a white cane or stick (*see* Fig. 34).

The headroom along a path shall be maintained at a height of not less than 2 100 mm above the surface of the path.

Any objects projecting more than 100 mm between 300 mm and 2 100 mm above ground level into an access route shall be clearly visible and detectable with a cane (*see* Fig. 34).

When a projecting obstacle exists, a protective guard shall be provided at ground level, under the projecting object, such as, a kerb or fixed element at a height of 100 mm-300 mm as cane detection. Cane detection shall not be set back more than 100 mm from the face of the projecting object. Wing walls, side partitions, alcoves or recesses are solutions for projecting elements where free space under the object is needed. Winged protection shall extend continuously between 300 mm and 1 000 mm above the floor and shall contrast visually with the background.

B-2.6.3 *Headroom*

Where headroom is less than 2 100 mm from the

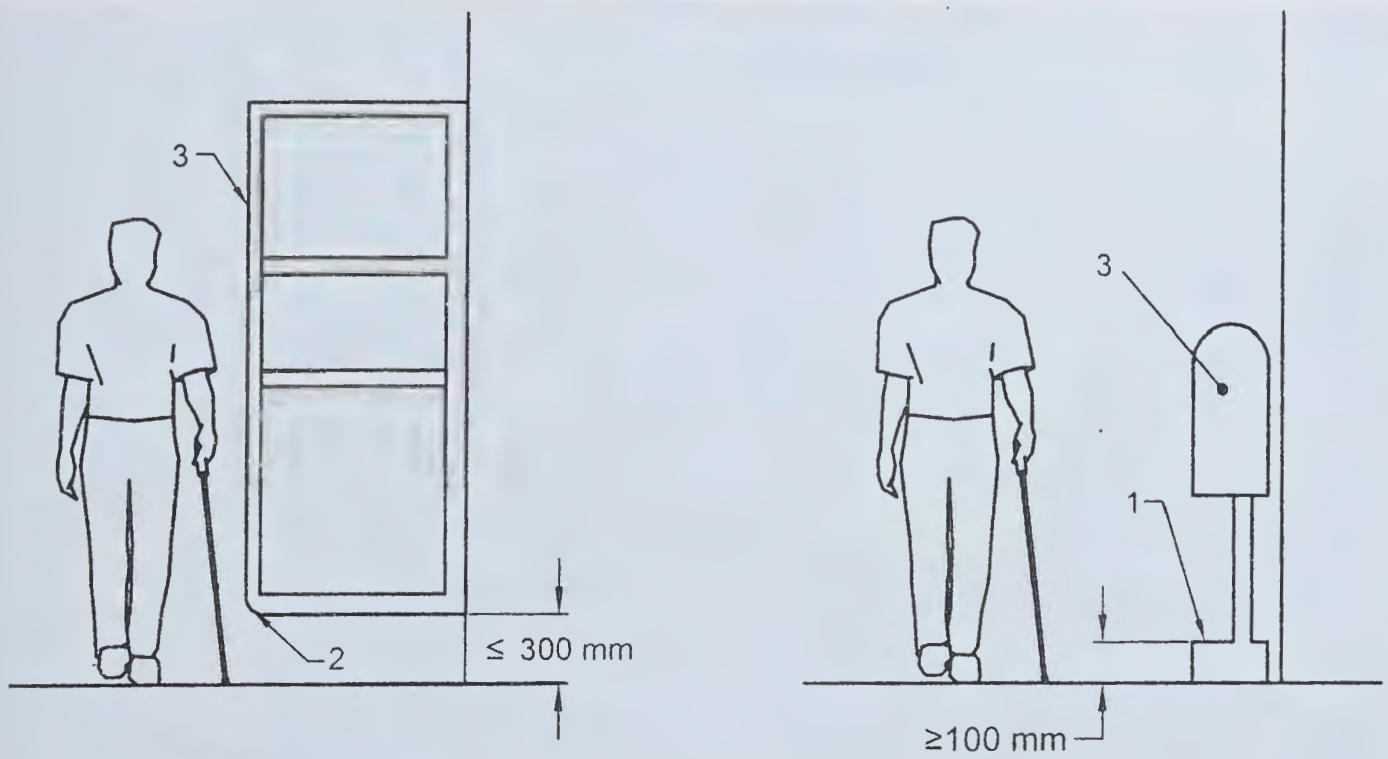

Key

1 Base plinth detectable with cane if a projecting object is more than 100 mm above floor level

2 Winged protection between 300 mm and 1 000 mm above floor level, contrasting visually with the background and detectable with a cane

3 Difference in light reflectance value to background – minimum 30 points

FIG. 34 SOLITARY OBSTACLES

finished floor level, a warning guardrail or other suitable barrier shall be provided for detection, having its leading edge at or below 680 mm above the finished floor level, such as to enable easy detection with a white cane (*see* Fig. 35).

B-2.6.4 *Identification*

Appropriate identification of specific facilities within a building used by the public is particularly essential to the persons with visual impairments. Raised letters or numbers shall be used to identify rooms or offices. Such identification shall be placed on the wall, to the left of the door, preferably at a height of 1 500 mm from the floor and comply with the requirements given in **B-24**.

B-2.6.5 *Warning Signals*

Following requirements with respect to warning signals near barriers shall be complied with:

a) Audible warning signals shall be accompanied by simultaneous visual signals for the benefit of those with hearing disabilities.

b) Visual signals shall be accompanied by simultaneous audible signals for the benefit of the blind and visually impaired people. To assist blind people, lettering and symbols on signs should be raised for tactile reading.

c) Information based on colour codes only should be avoided; colour blind people may find them difficult to understand.

d) Signs should be designed, located and illuminated as per **B-24**.

B-2.6.6 *Hazards*

B-2.6.6.1 Where hazards on the direct line of pedestrian travel such as stairs, escalators and moving walks or ramps with a slope of more than 1:16 cannot be avoided, tactile warning indicators and visual markings shall be provided. Every effort shall be exercized to obviate hazards to persons with disabilities.

B-2.6.6.2 Access panels in walls or manholes in walks, may be extremely hazardous, particularly when in use/ open, and shall be avoided. When manholes or access panels are open and in use. or when an open excavation exists on a site, particularly when it is in proximity of normal pedestrian traffic, barricades shall be placed on all open sides, and warning devices shall be installed.

B-2.7 Lighting for Walkways

Lighting for walkways shall be as given below:

a) Lighting should illuminate the walkway; lighting fixtures not exceeding a height of 4 m from ground level should be provided.

b) Lighting shall be provided every 20 m to 30m, focusing light not on the car lanes, but on the walkways.

c) A white light source, for example high-pressure sodium, is preferable in city and town centres for the aesthetic effect and for better colour definition, which benefits those with poor sight.

d) White lighting at average 35 to 40 lux is recommended to ensure colour contrast of tactile blocks and to ensure visibility at night to persons with low vision.

e) Light pole may preferably be located within the tree-planting zone.

f) Lower level light poles are preferred to avoid shadow where there are high trees.

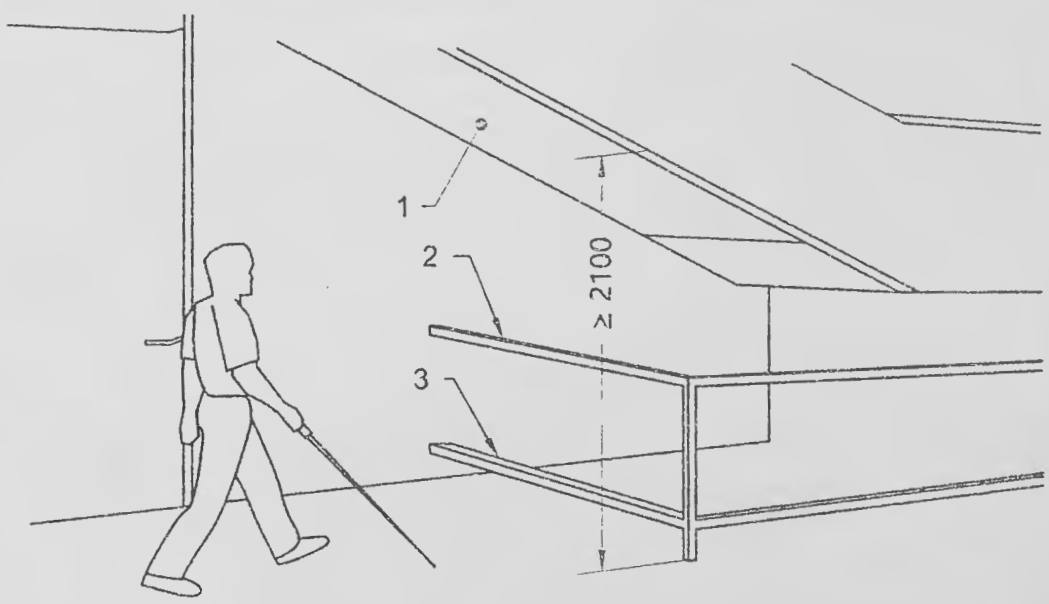

Key

1 Minimum 2100 mm clear height
2 Guardrail against impact, at a height 680 - 700 mm above floor
3 Guardrail detectable with cane, at a maximum height 300 mm above floor

All dimensions in millimetres.

FIG. 35 WARNING GUARDRAIL IN CASE OF INSUFFICIENT HEADROOM

B-3 DESIGNATED ACCESSIBLE PARKING SPACE

B-3.1 Location of Parking

The designated accessible parking spaces that serve a building shall be located as near as possible to the main entrance, and the distance from the accessible parking space to the main entrance shall not be more than 30 m. In case the access is through lift, the parking shall be located within 30 m of the lift lobby. Kerb ramp from parking space to an adjacent higher pedestrian path shall be provided in accordance with **B-3.6**.

Where indoor parking is provided, a suitable passenger lift or separated pedestrian ramp shall be installed to provide access from the parked vehicle to the principal entrance of the building or buildings served by the car parking.

B-3.2 Number of Designated Accessible Parking Spaces

The following minimum requirements concerning the number of parking places shall apply:

a) A minimum of one accessible designated parking space shall be provided in every parking area;

b) For up to 10 parking spaces, one designated accessible parking space shall be provided;

c) For up to 25 parking spaces, two designated accessible parking space shall be provided;

d) For up to 50 parking spaces, three designated accessible parking spaces shall be provided;

e) For up to 100 parking spaces, four designated accessible parking spaces shall be provided;

f) For up to 200 parking spaces, six designated accessible parking spaces shall be provided; and

g) For over 200 parking spaces, six designated accessible parking spaces for 200 parking spaces and one for each additional 100 parking spaces shall be provided.

In specialized facilities such as health care facilities, shopping areas and recreational facilities, a greater number of designated accessible parking spaces should be considered.

B-3.3 Signage for Parking

Signage for designated accessible parking spaces shall meet the following requirements:

a) International symbol of accessibility shall be displayed at approaches and entrances to car parking to indicate the provision of accessible parking lot for persons with disabilities within the vicinity.

b) Directional signs consisting of arrows combined with the international symbol of accessibility shall be placed along the route leading to the accessible parking lot (*see* Fig. 36).

FIG. 36 DIRECTIONAL SIGNAGE LEADING TO DESIGNATED ACCESSIBLE PARKING SPACES

c) Directional signs shall also be displayed to direct persons with disabilities to the accessible parking lot at points where there is a change of direction, or where the location of the accessible parking lot is not obvious or is distant from the approach viewpoints.

d) Accessible parking lot shall be identifiable by the International Symbol of Accessibility placed vertically. The signs shall not be obscured by a vehicle parked in the designated lot.

e) A vertical sign shall be provided, and to make it easily visible, the sign shall be at a minimum height of 2 100 mm. This height is to ensure that the sign does not get hidden behind large vehicles in the parking (*see* Fig. 37).

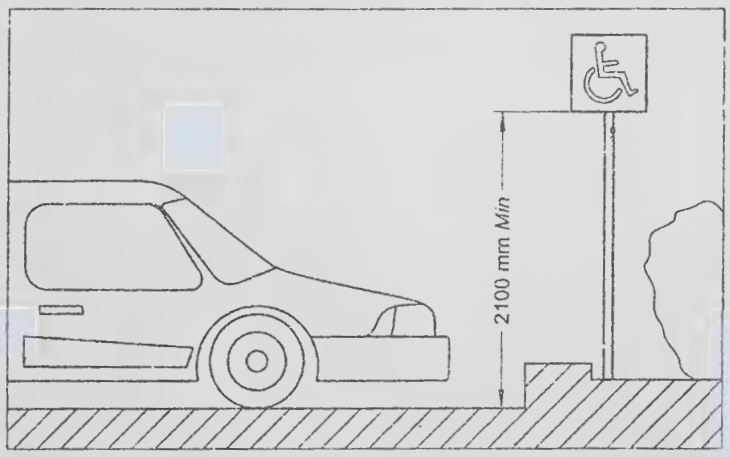

FIG. 37 VERTICAL SIGN AT DESIGNATED ACCESSIBLE PARKING SPACES

f) International symbol of accessibility shall be clearly marked/painted on the floor surface of the designated accessible parking lot for

drivers/riders with disabilities only. The symbol painted on the designated lot shall comply the following:

1) A square with dimensions of at least 1 000 mm but not exceeding 1 500 mm in length:
2) Located at the centre of the parking lot; and
3) Colour of the symbol shall be in contrasting colour scheme of blue and white (*see* **B-24.2.16** and Fig. 105).

B-3.4 Car Park Entrance and Parking Controls

The car park entrance shall have a height clearance of at least 2 600 mm.

If payment machine is provided, it shall provide all control at the height between 800 mm and 1 000 mm (*see* **B-7**).

Access to the machine shall be level along an accessible route and easy to operate. The machine shall be located so that it does not create a hazard or barrier for persons with disabilities.

B-3.5 Accessible Car Parking Space Dimensions and Surface Requirements

The accessible car parking space shall meet the following requirements:

a) The minimum width of the parking space for a car shall be 3 900 mm and the minimum length shall be 5 400 mm. This minimum width includes the transfer area beside the car with a minimum of 1 500 mm.
b) Two accessible parking spaces with one shared transfer area are widely used and shall have a minimum width of 6 300 mm (*see* Fig. 38).
c) It shall have a firm, level surface without aeration slabs.
d) Wherever possible, it shall be sheltered.
e) The transfer zones, both on the side and the rear should have yellow or white cross-hatch road markings (*see also* Fig. 38).
f) The designated accessible parking spaces shall be located on a gradient not greater than 1:50, throughout its length and its width.
g) The accessible route of 1 200 mm width shall be provided for wheelchair users to pass behind vehicle that may be backing out (*see* Fig. 39).
h) *Parking space along the footpath/sidewalk* — For road side parking of an accessible van, the minimum dimensions shall be 9 000 mm × 2 400 mm with a kerb to access the nearest footpath/sidewalk (*see* Fig. 40).
j) *Van parking with auxiliary movable ramps* — The size and design of accessible vehicles may

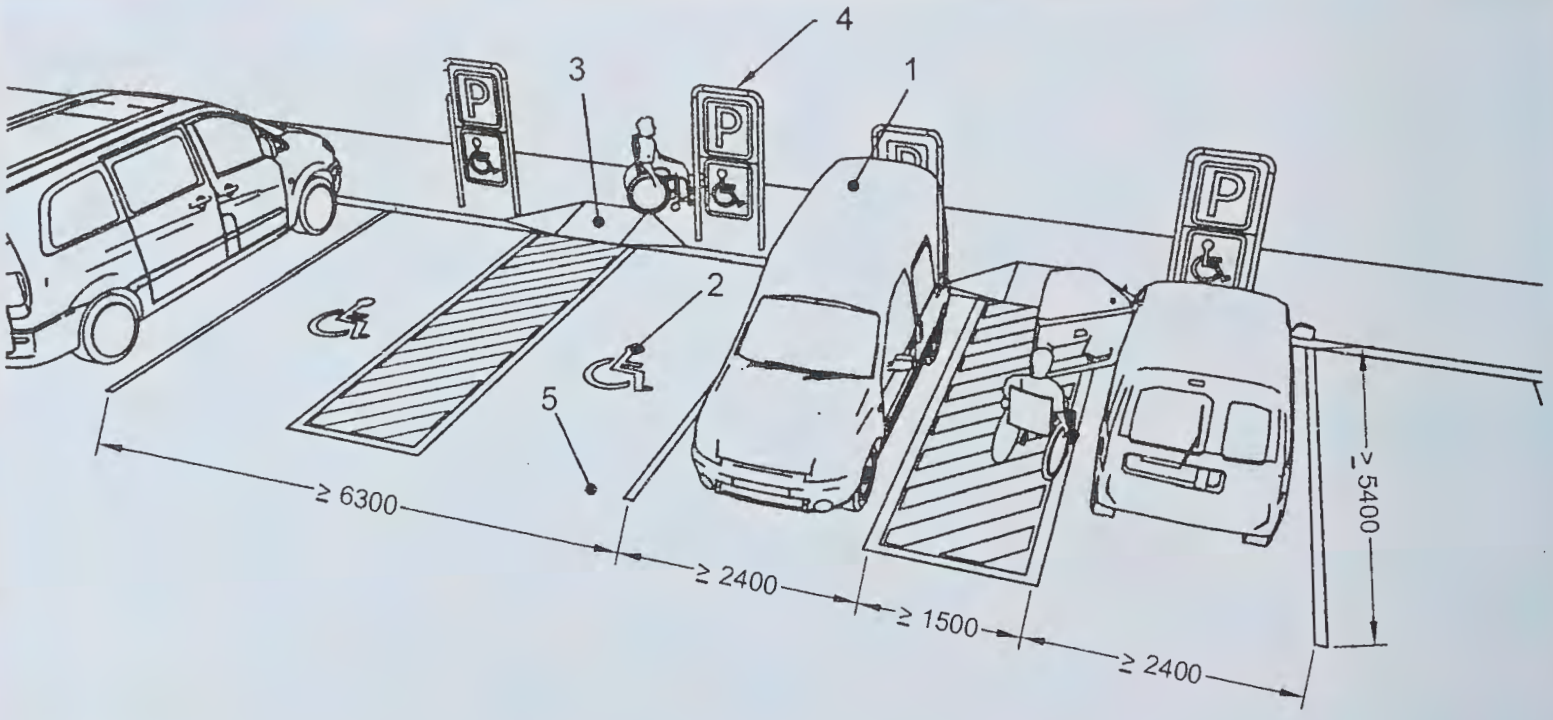

Key
1 Minimum unobstructed height for vans 2 600 mm
2 Symbol of accessibility
3 Kerb ramp
4 Signage, including symbol of accessibility
5 Firm ground

All dimensions in millimetres.

FIG. 38 ACCESSIBLE PARKING SPACES ACCESSIBLE PARKING SPACES WITH ONE SHARED TRANSFER AREA

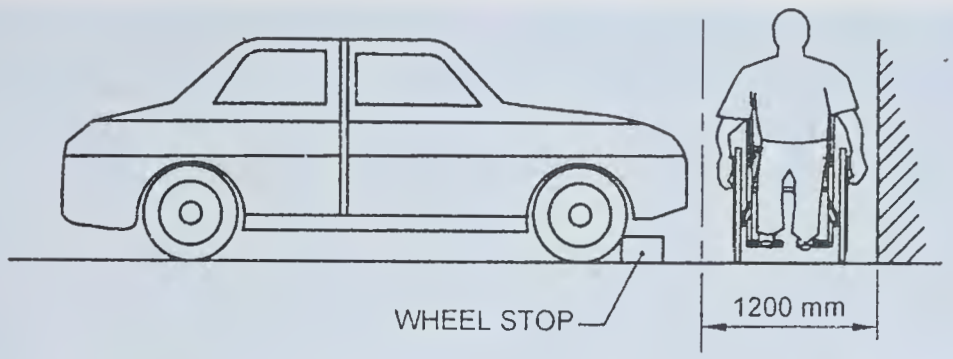

FIG. 39 ACCESSIBLE ROUTE WIDTH FOR WHEELCHAIR USERS TO PASS BEHIND A PARKED VEHICLE

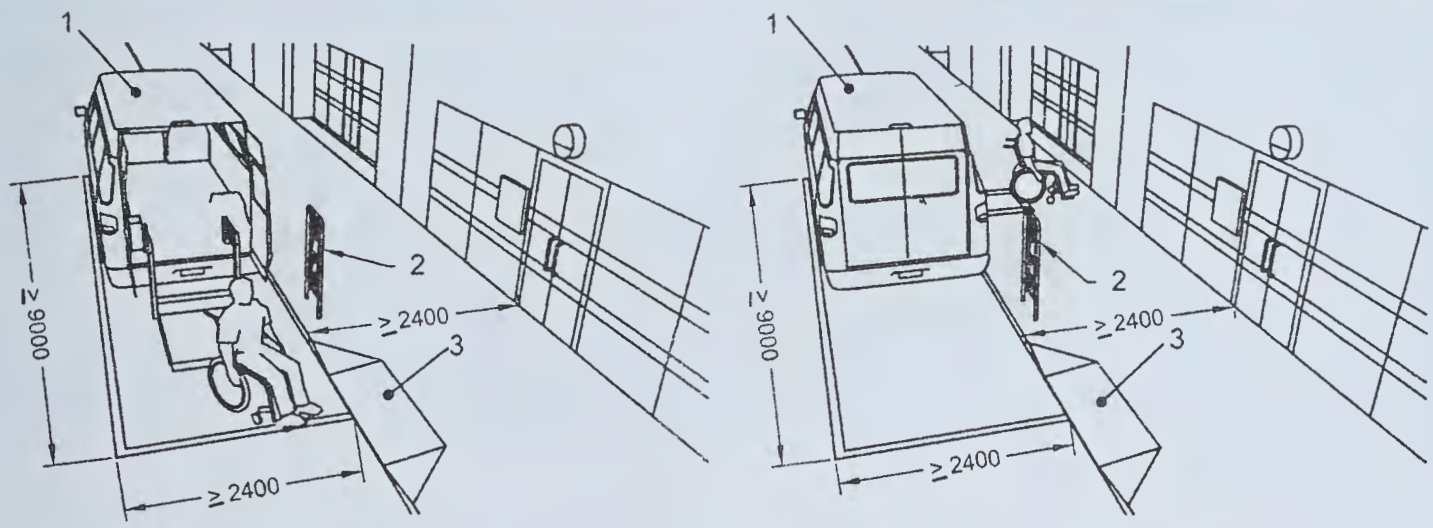

Key

1 Minimum unobstructed height — 2 600 mm

2 Signage, including symbol of accessibility

3 Kerb ramp

All dimensions in millimetres.

FIG. 40 PARKING SPACE ALONG A FOOTPATH/SIDEWALK

vary as some are fitted with ramps or hoists at the side or at the rear. The minimum width of the accessible parking space for a van shall have at least the same dimensions as for car parking spaces (*see* Fig. 37). Transfer areas between spaces may be shared.

For multi-purpose vehicles with hoists or lifts, more space is needed; at least an additional 2 400 mm area beside the van and/or at the rear of the van may be required. The dedicated parking space in this case shall be 4 800 mm wide and 9 000 mm long (*see* Fig. 38 and Fig. 40 for different types of designated parking spaces).

As an alternative, a parking space of 2 400 mm wide × 9 000 mm in length along a footpath may be used, provided the footpath is at least 2 400 mm wide as shown in Fig. 39.

B-3.6 Kerb Ramp from Parking Space to an Adjacent Higher Pedestrian Path

The kerb ramp should be located in close proximity to the designated accessible parking area connecting the accessible path of travel to the main entrance. The kerb ramp width should be a minimum of 1 000 mm. The gradient of the kerb ramp should consider the requirements in **B-2.3**. Kerb ramps shall have a slip-resistant surface. The accessible path to the kerb ramp can be marked with hatching painted on the road surface to prevent people from parking in this area (*see* Fig. 38).

B-4 APPROACH TO THE BUILDING

The entry to the building shall be facilitated by the following:

a) Space should be provided for passenger drop-off points for taxis, public transport and also for large vehicles such as vans, etc, as near as possible to the main accessible entrance. Vehicle drop-off areas should be a minimum of 9 000 mm in length, have a minimum width of 3 600 mm and be served by a kerb ramp.

b) At least one accessible route leading to an accessible entrance of the building shall be provided from the alighting and boarding point of taxi stands and car park lots (*see* **B-3**) for people with disabilities.

c) If there is a difference in level between the carriageway and the footpath, a kerb ramp conforming to **B-2.3** shall be provided to facilitate the setting-down of people close to

the main entrance of a building. This benefits people who need to transfer to and from a wheelchair and others.

An appropriate tactile ground surface indicator (TGSI) should be provided to lead vision impaired persons to the main entrance where no other clues indicate the path to the building.

d) Building shall have all accessible entrance doors complying with **B-5.3**.

e) The accessible entrance, if different from the main entrance, shall be located adjacent to the main entrance and not at the rear of the building. The accessible entrance shall be clearly signed and easy to locate.

f) Symbol shall be displayed at all other non-accessible entrances to direct persons with disabilities to the accessible entrance.

B-5 ACCESS AT ENTRANCE AND WITHIN THE BUILDING

B-5.1 General Requirements

a) Access to the building entrance shall be in accordance with **B-4**.

b) A clear, firm and level landing of at least 1 800 mm 1 800 mm shall be provided on either side of the entrance door.

c) The width of the accessible entrance door shall not be less than 900 mm and the width of the corridors or passageways leading to and from such access door shall not be less than 1 200 mm.

d) In multi-storey buildings, the accessible entrance shall have an accessible route leading to the lifts.

e) Internal floor surfaces shall be of materials that do not impede the movement of wheelchairs. If mat is provided it shall be in level with the floor finish.

f) Persons with visual impairments find it easier to locate doors if there is a texture difference in the floor around the doorway from the rest of the flooring. It is generally good practice to recess foot mats in the floor on either side of the door but care shall be taken to ensure that the top end of the mats are flush with the rest of the flooring.

g) In addition to the tactile pavers (TGSI) leading to the main entrances, beepers may be put at all main entrances to enable people with visual impairments to locate them.

h) Tactile layout plan of the building should be provided at the entrance for people with visual impairment .

j) Glazed entrance doors shall have manifestations on the glass as per **B-5.3.13**.

B-5.2 Internal Corridors and Accessible Routes

B-5.2.1 *General*

The main horizontal circulation design shall be level on each floor in order to ensure that the building is accessible to all people. Horizontal circulation shall be without steps. Where differences in level cannot be avoided, ramps or lifts shall be provided in accordance with **B-6**.

Buildings should be designed, constructed and managed so that the internal layout is accessible and easily understood. All aspects of horizontal circulation, including corridors, should be designed to facilitate ease of movement for all people.

In order to avoid a tripping hazard (especially during a fire evacuation), where a raised threshold is necessary at a door opening, its maximum height shall be 12 mm, and those exceeding 5 mm shall be bevelled, and shall have a minimum difference in LRV of 30 points compared to the floor.

Routes should preferably intersect at right angles to each other and be easy to follow. To facilitate people with visual impairments, routes should have detectable cues and different visual contrast from the surroundings. For orientation and wayfinding in very complex buildings and across large areas, guidance may be provided by tactile ground surface indicators and visual, audible and tactile information, including egress and evacuation.

NOTE — Handrails can provide support for people with impaired mobility, guidance for people who are blind or have impaired vision, and can also support Braille information or tactile information.

B-5.2.2 *Internal Passages*

Intensity in use of the corridor shall be a criterion when establishing the minimum width and length of the corridor (*see* Fig. 41). The minimum unobstructed width of corridors shall be 1 500 mm, with a preference for a width of 1 800 mm.

Where less than 1 800 mm wide, a corridor shall be provided with passing places, 1 800 mm wide and at least 1 800 mm in length at reasonable intervals. These dimensions shall be exclusive of handrails and any other projections, for example portable fire extinguishers, notice boards, etc.

Adequate circulation space, where a doorway exists, shall be provided (*see* **B-5.3**).

Changes of direction within a corridor shall have a turning circle with a diameter of 1 500 mm or more, clear of any obstructions (*see* Fig. 42).

The minimum clear height of corridors shall be 2 100 mm.

Hanging objects on walls should be avoided, except when they comply with **B-2.6.2**. The minimum unobstructed width shall remain 900 mm.

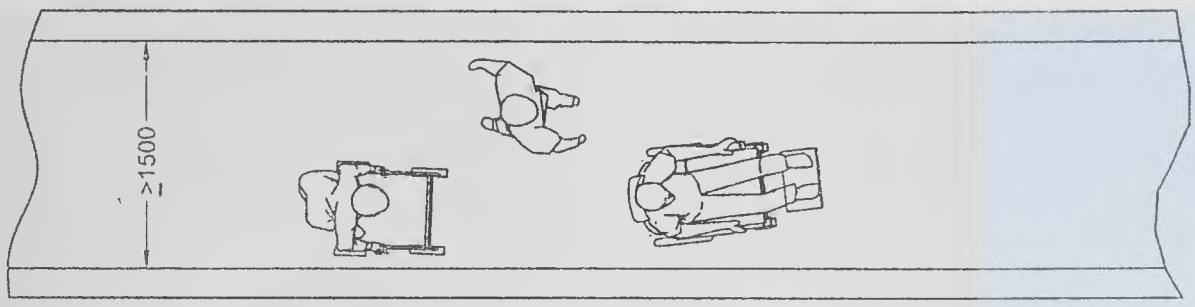

41A MINIMUM UNOBSTRUCTED WIDTH OF CORRIDOR

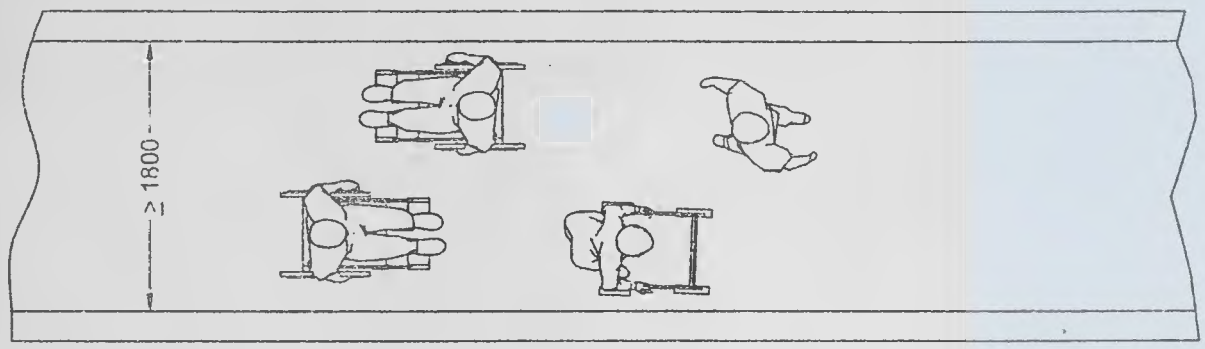

41B PREFERRED CORRIDOR WIDTH

All dimensions in millimetres.

FIG. 41 DIFFERENT CORRIDOR WIDTHS DETERMINED BY THE INTENSITY OF USE

B-5.2.3 *Turning Space for 90° Turn of a Wheelchair in Corridors*

The manoeuvring zone required for a wheelchair to make a 90° turn shall be designed according to Fig. 42.

It shall have no gradient, and it shall not be less than 1 500 mm wide and 1 500 mm long in the direction of travel.

B-5.2.4 *Circulation Space for 180° Wheelchair Turn*

The space required for a wheelchair to make a 180° turn shall be not less than 2 000 mm in the direction of travel and not less than 1 800 mm wide.

For landing dimensions, *see* **B-6.2.6**.

B-5.2.5 *Resting Benches/Seats*

In long paths of travel resting areas shall be provided at frequent intervals not exceeding 30 m complying with **B-2.2.1** (g).

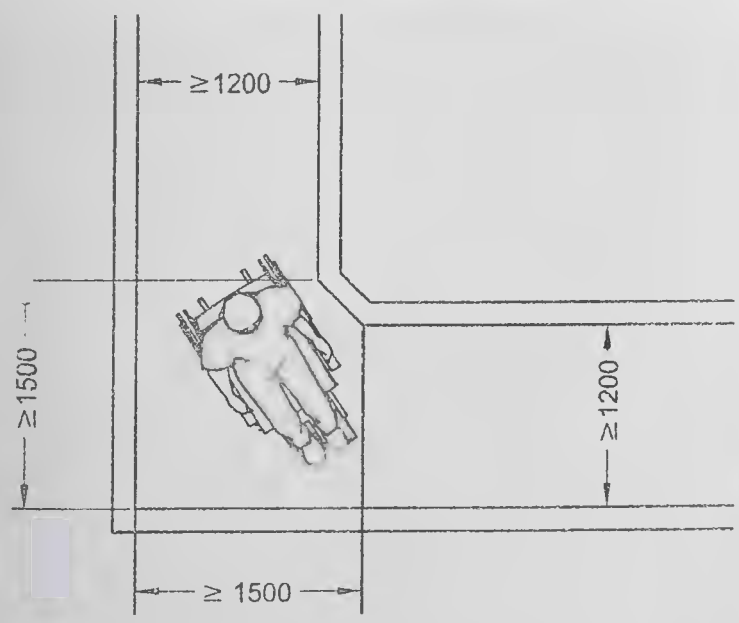

All dimensions in millimetres.

FIG. 42 SPACE REQUIRED FOR 90° TURN

B-5.2.6 *Protruding Object*

Obstacles, projections or other protrusions shall be avoided in corridors, passageways or aisles. Long paths of travel shall be avoided and resting areas shall be provided at frequent intervals not exceeding 30 m. For provision of unavoidable obstacles and protruding objects and protection therefrom, requirements given in **B-2.6** shall be followed.

B-5.2.7 *Floors in Corridors*

B-5.2.7.1 Floor surface shall be stable, firm, level and slip-resistant, preferably of matt finish and shall not have any projections, drops, or unexpected variation in level that may impede the easy access by persons with disabilities. Following requirements shall also be complied with:

a) Complex patterns shall be avoided.

b) Floor patterns that could be mistaken for steps, for examples stripes, shall not be used for floors in corridors.

c) Floors shall be levelled. If this is unavoidable, the slope of floors shall be no greater than 1:20. If greater slope is adopted, floor shall be designed as ramp.

B-5.2.7.2 For people with low vision, lines of brightly coloured fluorescent tape may be placed on the floor surface to assist mobility in poor lighted areas.

B-5.2.7.3 Carpeting should be avoided in circulation areas/accessible routes. In case, Where, carpets are used in circulations areas, they shall,

a) not be deeper than 12 mm;

b) shall be securely fixed;

c) have firm cushion, pad or backing; and

d) exposed edges of carpets be fastened to floor surface and trimmed along the entire length of the exposed edge.

B-5.2.8 *Lighting in Corridors and Manoeuvring Zone*

Lighting in the corridor and manoeuvring zone shall be even, diffused and without glare, reflections or shadows. Minimum illumination level at the corridor and manoeuvring zone shall be 100 lux.

B-5.2.9 *Doors Leading into Corridors*

Doors shall conform to **B-5.3** and shall not open outwards from rooms directly into a frequently used corridor, with the exception of doors to accessible toilets and service ducts. Where a door opens into an infrequently used corridor such as emergency exit, the corridor width shall allow a clear space of 900 mm within the corridor when the door is open. Such doors shall be located clear of any sloping floor surfaces in the corridor. Any door that opens towards a frequently used corridor should be located in a recess at least as deep as the width of the door leaf.

B-5.3 Doors

B-5.3.1 *General*

The doors shall meet the following general requirements:

a) Doorways shall be levelled.

b) Doorways shall be easy for people with vision impairment to locate and identify.

c) Wherever revolving doors or turnstiles are installed, they shall be supplemented with an alternate side-hung (swing type) door with 900 mm minimum clear opening width.

d) Bathroom (toilets/washroom) doors should swing out/should be two way opening type so that the person inside does not fall against the door and block it. In case there is not much space available, consideration should be given to the use of sliding or folding doors, which are easier to operate and require less wheelchair manoeuvring space.

e) Door should not be too heavy to operate and shall not require a force of more than 22 N to operate.

f) Automatic doors shall have a push button system to open them.

g) All external doors shall have warning blocks installed 300 m before the entrances for aid of visually impaired users.

h) The leading edge of any door that is likely to be held open, especially those which are opening into corridors or circulation areas, shall contrast visually with the remaining surfaces of the door and its surroundings on its both sides by a 25 mm wide high-contrast manifestation, to help identification by visually impaired people. The architrave/door frame shall also contrast visually with the wall surfaces surrounding the doorway.

j) Low-hanging door closers that remain within the opening of a doorway, when the door is open or that protrude hazardously into regular corridors or traffic ways when the door is closed, shall be avoided.

k) All glazed doors shall have a highly visible contrasting frame with manifestations in a contrasting colour complying with the requirements given in **B-5.3.13**. Colour should contrast with the background visible through the door, whether on the inside looking out or on the outside looking in.

m) Tactile warning should be provided at approach to automatic doors complying with **B-2.5**.

n) Automatic doors, where provided should have guard rails, power floor mats, push or kick plate, horizontal or vertical sensing device and the doors should remain fully open until area is cleared by user. Sliding automatic doors are safer than swinging automatic doors.

p) Doors which remain ajar are extremely hazardous for vision impaired people. Doors are best fully open or completely closed; therefore, where appropriate, automatic door closure devices should be considered.

q) Entrance shall be well illuminated with even lighting between entrance and reception area.

r) Door hardware shall comply with the requirements in **B-5.3.6**.

B-5.3.2 *Clear Width*

B-5.3.2.1 The minimum clear opening of doorways shall be 900 mm, measured between the face of the door and the face of the door stop with the door open at 90° as illustrated in Fig. 43.

B-5.3.2.2 In case, the door has two independently operated door leaves, at least one active leaf shall comply with **B-5.3.2.1**.

B-5.3.3 *Thresholds*

There shall be no thresholds (doorsills). If thresholds are unavoidable, they shall not exceed 12 mm and those exceeding 5 mm shall be bevelled and contrast visually

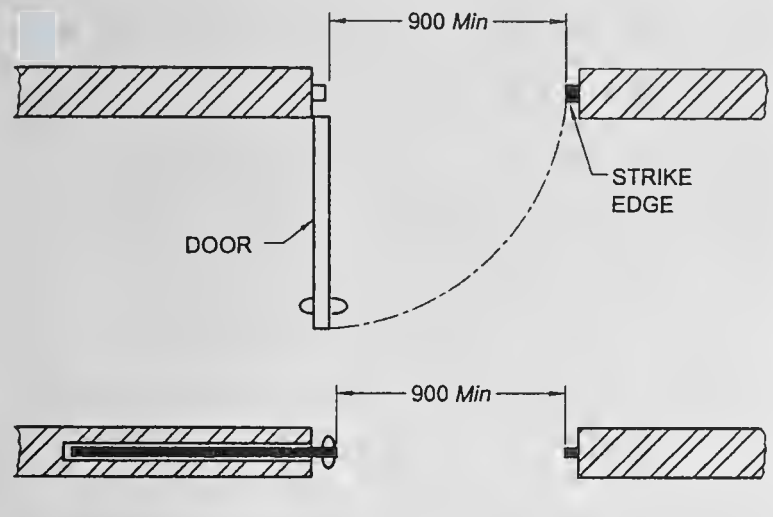

All dimensions in millimetres.

FIG. 43 MINIMUM CLEAR OPENING OF DOORWAYS

with the adjacent floor. A minimum difference in LRV of 30 points compared to the floor shall be provided.

B-5.3.4 *Manoeuvring Space at Doors*

To enable wheelchair users to approach doors, manoeuvring space as given below shall be provided. In narrow spaces, sliding doors may be preferable.

A minimum distance of 600 mm shall be provided beyond the leading edge of door to enable a wheelchair user to manoeuvre and to reach the handle.

Wheelchair manoeuvring spaces shall be free of any obstructions and be provided on the side of the door handle in the following manner (*see also* Figs. 44 and 45):

a) On the pull side, a minimum space of 600 mm;

b) On the push side, a minimum space of 300 mm; and

c) For two-way swing door, a minimum space of 300 mm.

B-5.3.5 *Two Doors in Series*

The minimum space between two hinged or pivoted doors in series, shall be 1 500 mm plus the width of the door swinging into that space, as shown in Fig. 46.

B-5.3.6 *Door Hardware*

Operable devices such as handles, pulls, latches and locks shall meet the following requirements:

a) They shall be operable by one hand.

b) They shall not require fine finger control, tight grasping, pinching or twisting to operate.

c) They shall be mounted at a height of 850 mm to 1 100 mm from the floor (*see* Fig. 47).

d) For easy identification by persons with visual impairment, all door furniture shall contrast visually with the surface of the door;

e) The location and design of latch and push/pull handles shall be consistent throughout a building.

f) To facilitate the closing of a door by wheelchair users (for example a water-closet compartment, that does not have a self-closing mechanism), the door shall have a horizontal handle, provided on the closing face of the door, approximately 760 mm from the floor.

B-5.3.7 *Door Handles*

The door handles shall conform to **B-7**. The following are recommended for door handles:

a) Push-pull mechanisms that require no grasping;

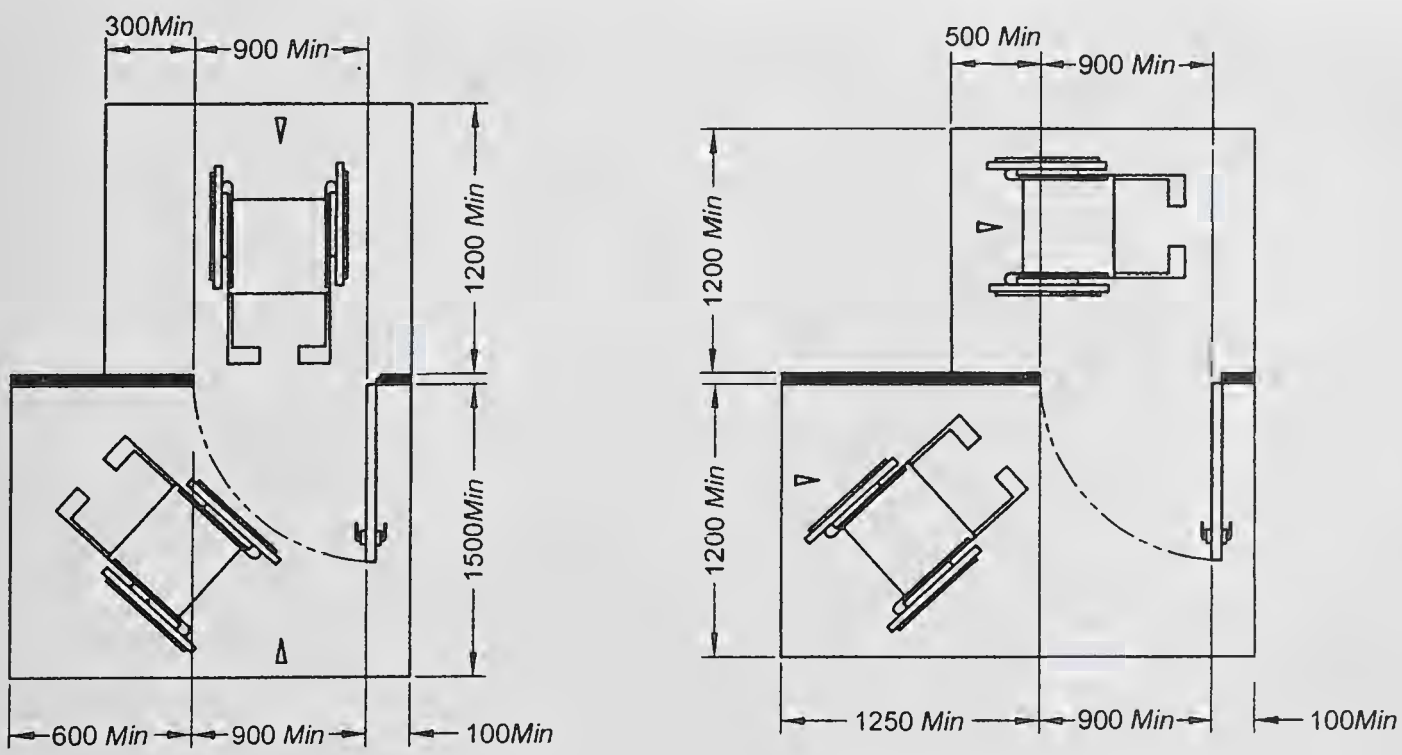

44A FRONT APPROACH

44B LATCH SIDE APPROACH

All dimensions in millimetres.

FIG. 44 MANOEUVRING SPACE NEEDED BY WHEELCHAIR USERS TO APPROACH DOORS

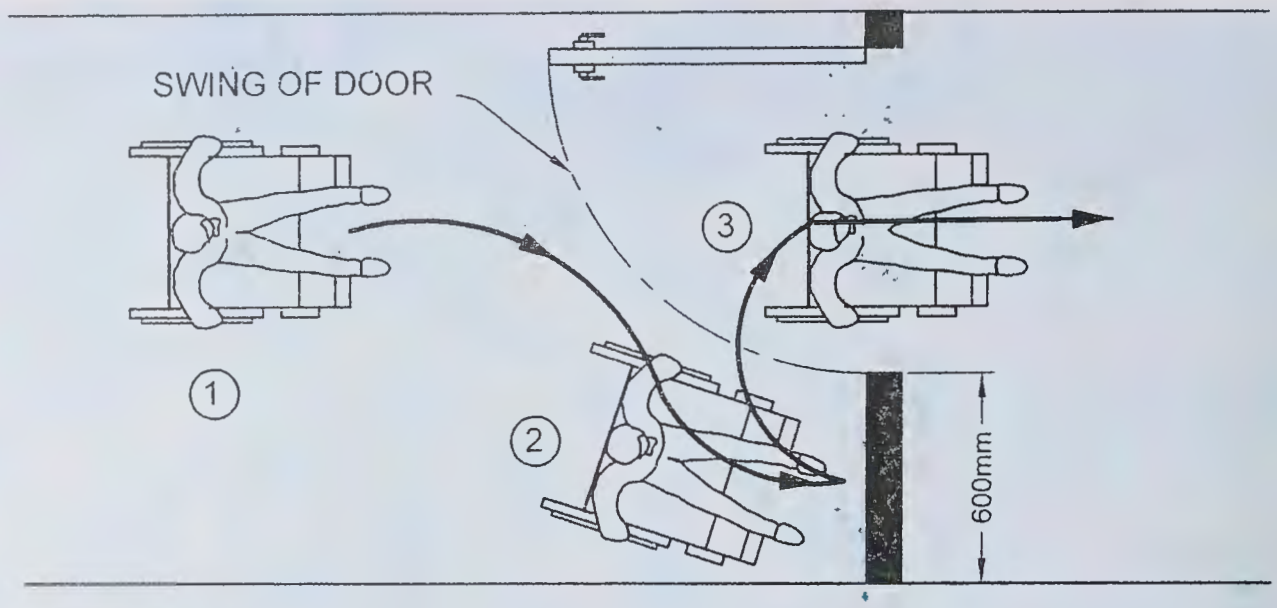

FIG. 45 POSITION TAKEN BY A WHEELCHAIR USER WHEN NEGOTIATING DOOR IN PASSAGE WAY

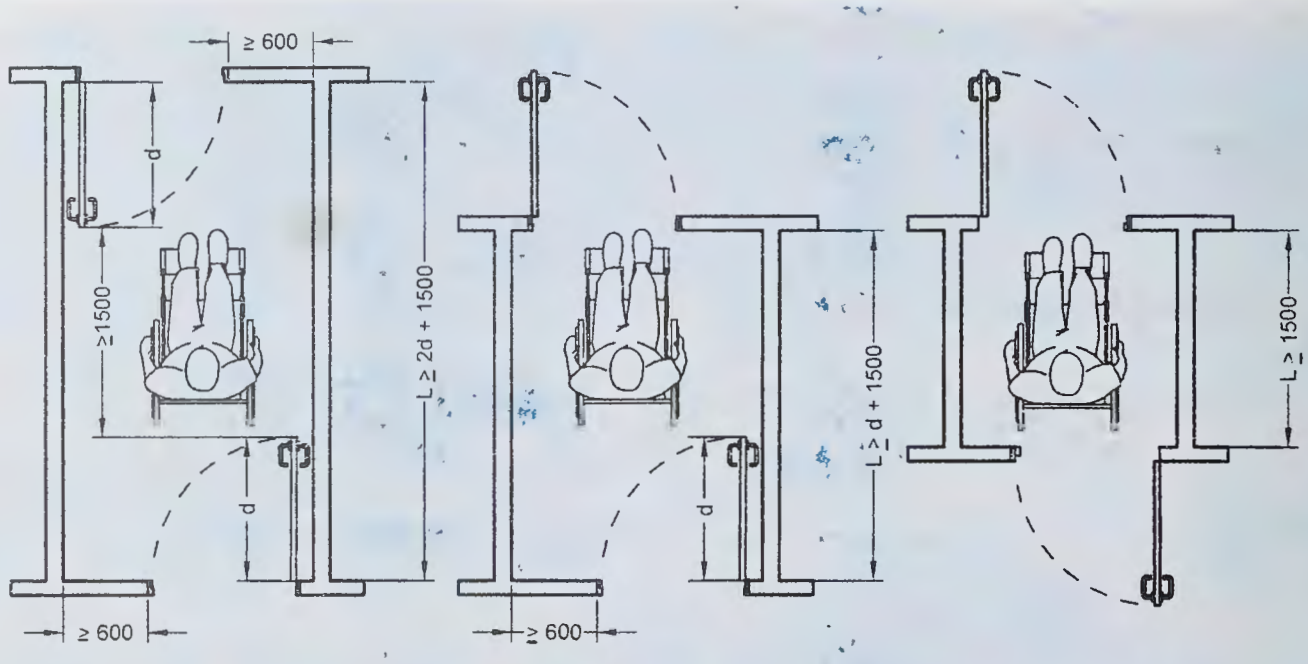

All dimensions in millimetres.

FIG.46 SPACE BETWEEN TWO HINGED OR PIVOTED DOORS IN SERIES

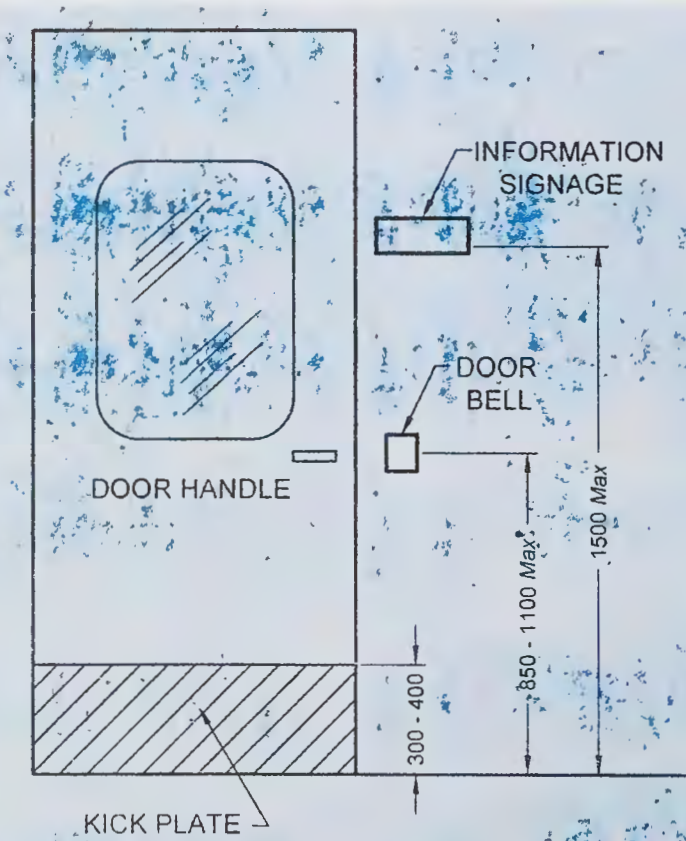

All dimensions in millimetres.

FIG. 47 DOOR HARDWARE LOCATION

b) Lever handles to be preferred on latched doors;

c) It is safer to use D-shaped handles as they reduce the risk of catching on clothing, or injuring from the exposed lever end; and

d) Doorknob is not recommended, as it does not provide adequate grip for persons with impaired hand functions.

B-5.3.8 *Sliding/Folding Doors*

Operating hardware should be exposed and usable from both the sides when the door is fully open.

B-5.3.9 *Door Closure*

The sweep period of the door should be adjusted, so that from an open position of 90°, the door does not take less than 3 s to move to a semi-closed position.

B-5.3.10 *Vision Panel*

All two-way swing doors or doors in general circulation areas shall be provided with vision panels giving a visibility from a height of 800 mm to 1 500 mm (*see* Fig. 48). This will enable both the wheelchair user and the ambulatory disabled to be noticed by a person on the opposite side in order to prevent him/her from being accidentally struck by the door.

B-5.3.11 *Kick-Plate*

Kick-plates of not less than 300-400 mm height are recommended for doors in high-use in order to protect the push side of doors from damage (*see* Fig. 47 and Fig. 48).

B-5.3.12 *Door Identification*

To help people with impaired sight to see doors, the door and frame should be in a colour which contrasts with the adjoining wall. The door shall not be of a highly polished/reflective material such as stainless steel.

B-5.3.13 *Glass Doors*

The presence of a glass door shall be made apparent, with permanent uninterrupted visual manifestation at two levels (hand and eye level), within 800 mm to 1 000 mm from the floor and within 1 400 mm to 1 600 mm from the floor, contrasting visually with the immediate background with a difference in LRV of 30 points seen through the glass in all light conditions (*see* Fig. 49). The width of the manifestation shall be minimum 75 mm. The edges of a glass door shall also be apparent when the door is open. An additional visual manifestation placed at a height of 100 mm to 300 mm is recommended (*see* Fig. 49). Visual manifestation consisting of two separate colours with a minimum difference in LRV of 60 points are recommended to enable lighting conditions and backgrounds to be taken into account.

If a glass door is adjacent to, or is incorporated within, a fully glazed wall, the door and wall shall be clearly differentiated from one another, with the door more prominent. To achieve this, the door may be framed on both sides and also on the top by an opaque high-contrast strip at least 25 mm wide.

Glass that is silvered or highly reflective should be avoided and any free-standing edges of glazed screens should have a strip contrasting visually with the surroundings against which they are seen.

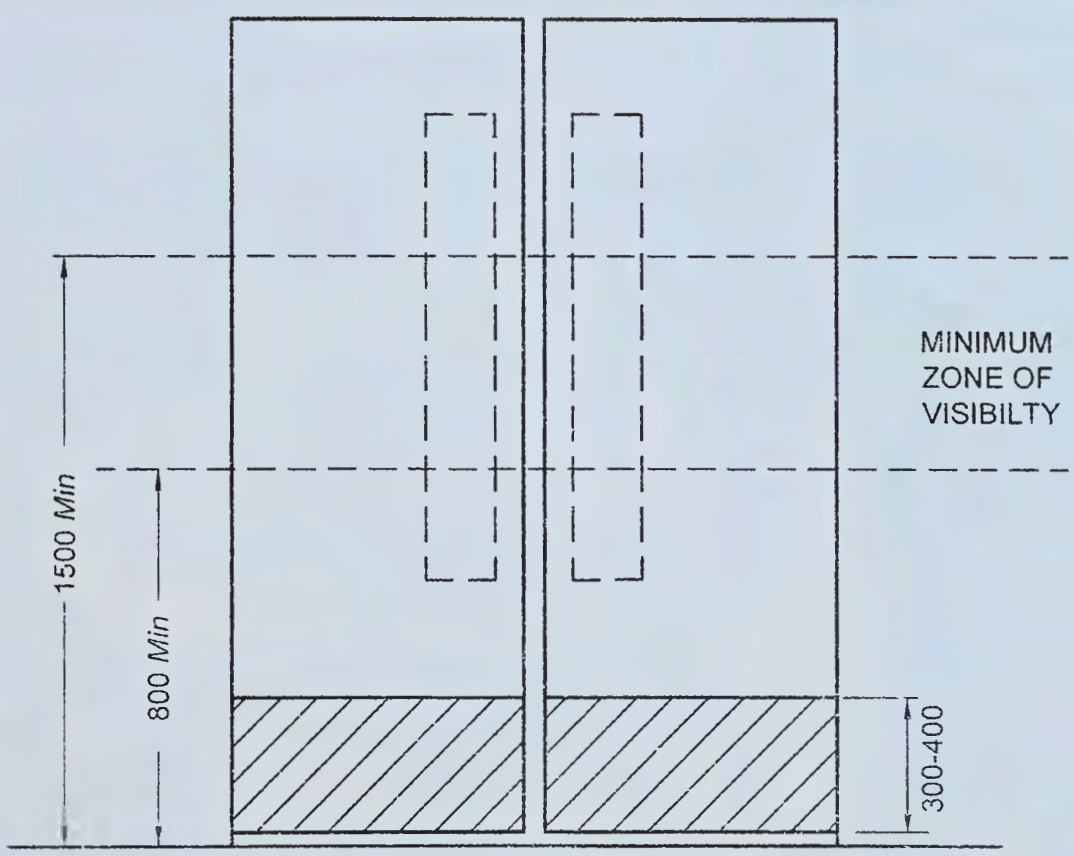

All dimensions in millimetres.

FIG. 48 VISION PANEL

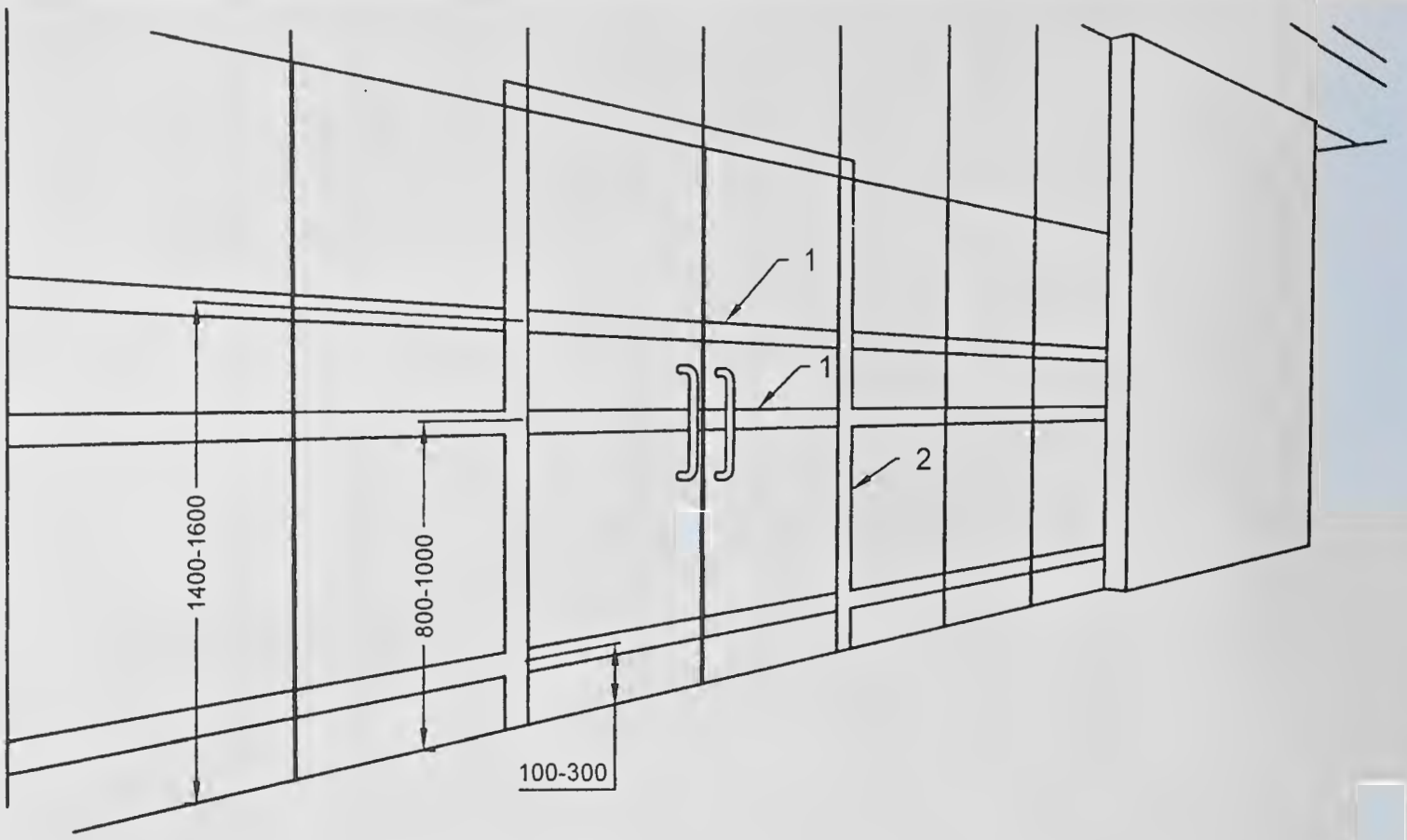

Key

1 Visual marking (manifestations), minimum width 75 mm, two separate colours with a minimum difference in LRV of 30 points

2 Visual marking on door frame, minimum width 50 mm

All dimensions in millimetres.

FIG. 49 PERMANENT MANIFESTATION ON GLASS DOOR

B-5.4 Windows

The windows shall meet the following general requirements (*see* Fig. 50):

a) Windows shall have handles/controls in accordance with **B-7** and **B-5.3.7**.

b) They shall provide an unobstructed viewing zone for wheelchair users between 600 mm and 1 400 mm.

c) Curtain or venetian blind controls/ropes shall be at 800-1 000 mm height from the finished floor level for wheelchair users/short stature persons.

B-5.5 Handrails and Grab Bars

B-5.5.1 *General*

Handrails/grab bars are extremely important features and shall be designed to be easy to grasp and to provide a firm and comfortable grip so that the hand can slide along the rail without obstruction. Many persons with disabilities rely upon handrails/grab bars to maintain balance or to prevent serious falls. Handrails are used as a locational and mobility aid by persons with visual impairments and as a support for persons with mobility impairments. The handrail/grab bars shall be securely fixed to the wall. To aid identification, the colour of the handrail/grab bar shall contrast with the wall behind.

B-5.5.2 *Specific Requirements for Handrail*

B-5.5.2.1 Handrails shall (*see also* Fig. 51),

a) be securely fixed and rigid; the fastenings and the materials shall be able to withstand a minimum point load, both vertical and horizontal of 1.7 kN;

b) be slip-resistant with round ends;

c) have a circular section of 38-45 mm in diameter;

d) be free of any sharp or abrasive elements;

e) have continuous gripping surfaces, without interruptions or obstructions that may break a hand hold;

f) contrast with the wall behind; and

g) may be provided with Braille/tactile markings at the beginning and at the end to give information to people with visual impairment.

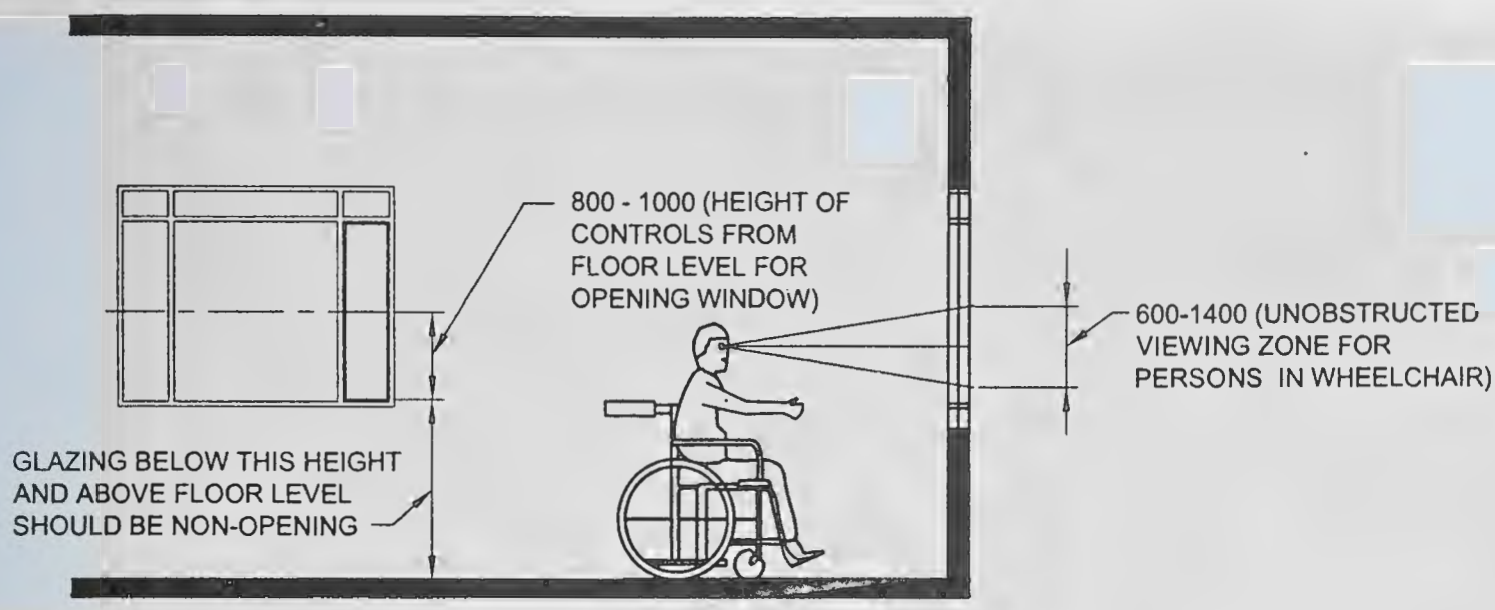

All dimensions in millimetres.

FIG. 50 REQUIREMENTS FOR WINDOWS

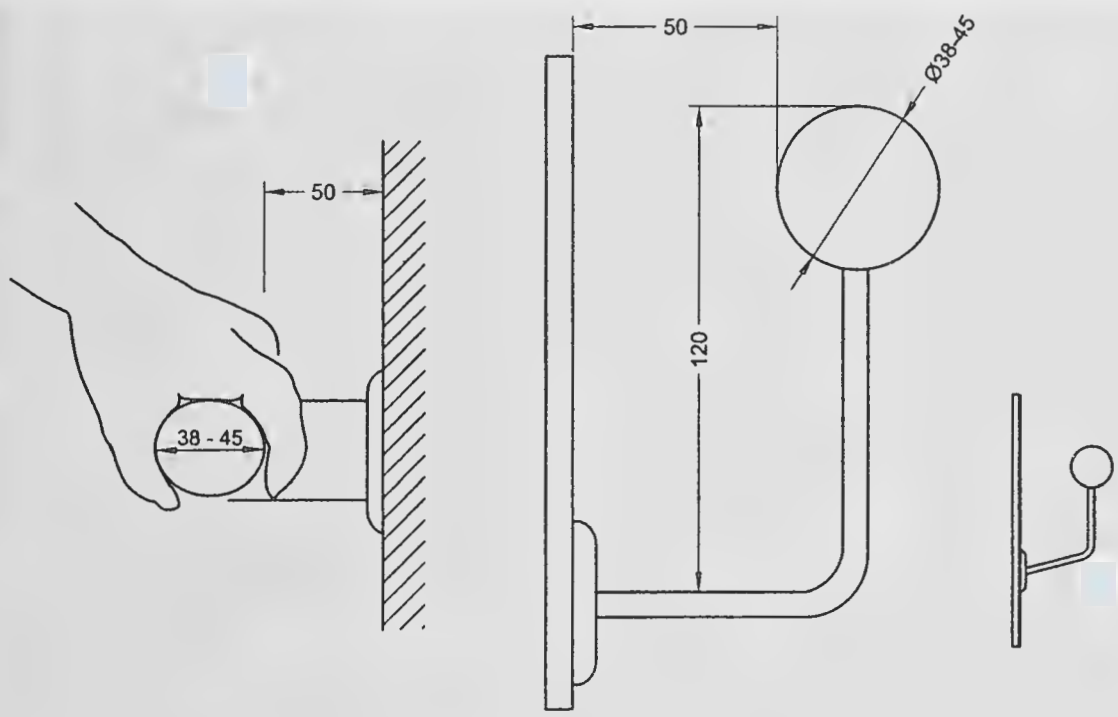

All dimensions in millimetres.

FIG. 51 HANDRAILS

B-5.5.2.2 For stepped path, stairs and ramps, handrails shall meet the following requirements (*see* Figs. 52, 53 and 54):

a) They shall be provided on both the sides;

b) They shall be continuous, even at the landings;

c) They shall extend at least 300 mm beyond the first and last nosing. A handrail shall not project into a transverse circulation path unless it is continuous and intended to form part of the guidance along that path. The end of the horizontal extension should be turned towards the wall on the closed side of the ramp or stairs, or be turned down and terminate at the floor or ground level.

d) They shall have a minimum clear space of 50 mm from the walls; and

e) The height to the top of a handrail shall be between 850 mm and 950 mm above the surface of a ramp, the pitch line of a stair, and the surface of a landing. A second handrail, with a lower profile than the first one, shall be provided. The height to the top of the second handrail should be between 650 mm and 750 mm above the surface of a ramp, the pitch line of a stair, and the surface of a landing. There shall be sufficient distance between the two handrails (say, 200 mm).

f) In case the handrail is enclosed in a recess, the recess shall extend at least 450 mm above the top of the rail.

B-5.5.3 *Grab Bars*

Grab bars shall,

a) be securely fixed and rigid;

b) be slip-resistant with round ends;

c) Preferably have knurled surfaces;

d) have a circular section of 38-45 mm in diameter:

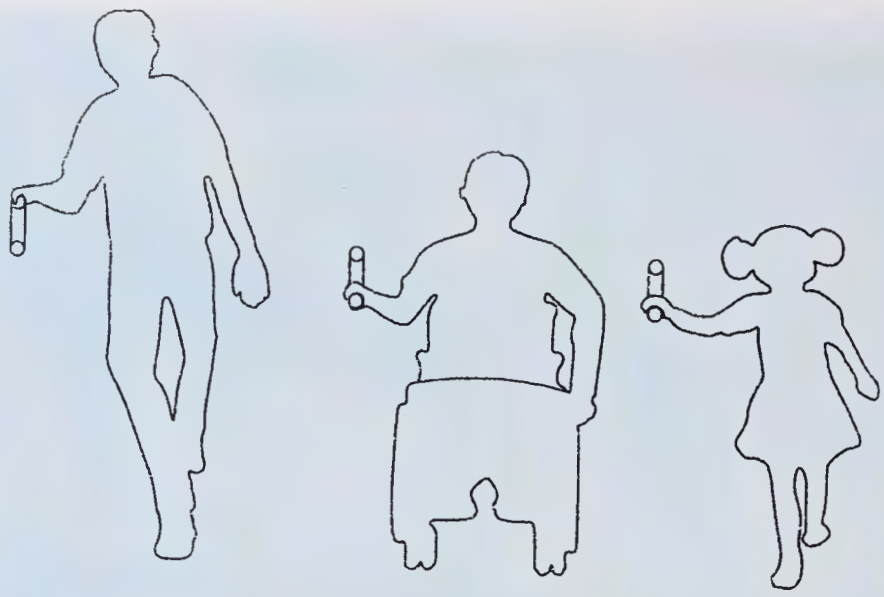

FIG. 52 HANDRAILS AT TWO LEVELS TO HELP CHILDREN AND PEOPLE WITH SHORT STATURE

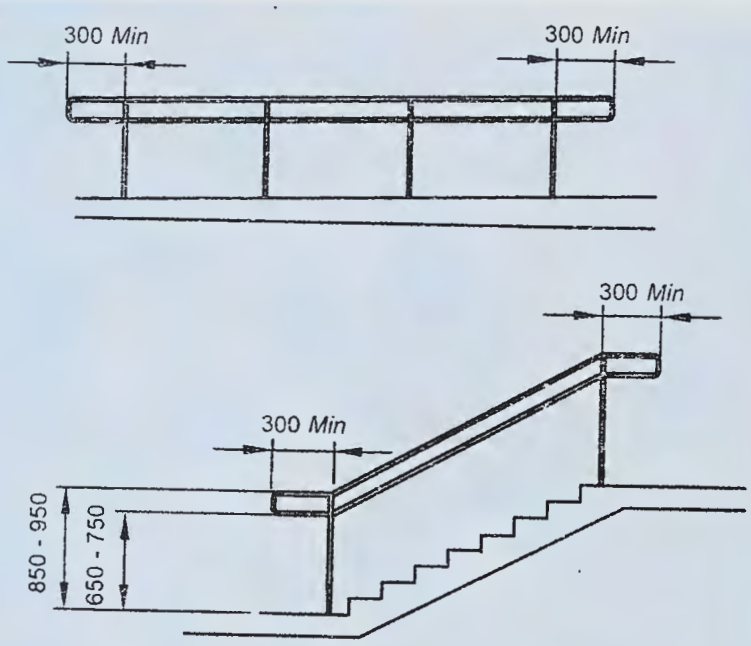

All dimensions in millimetres.

FIG. 53 HANDRAILS FOR STEPS AND STAIRS

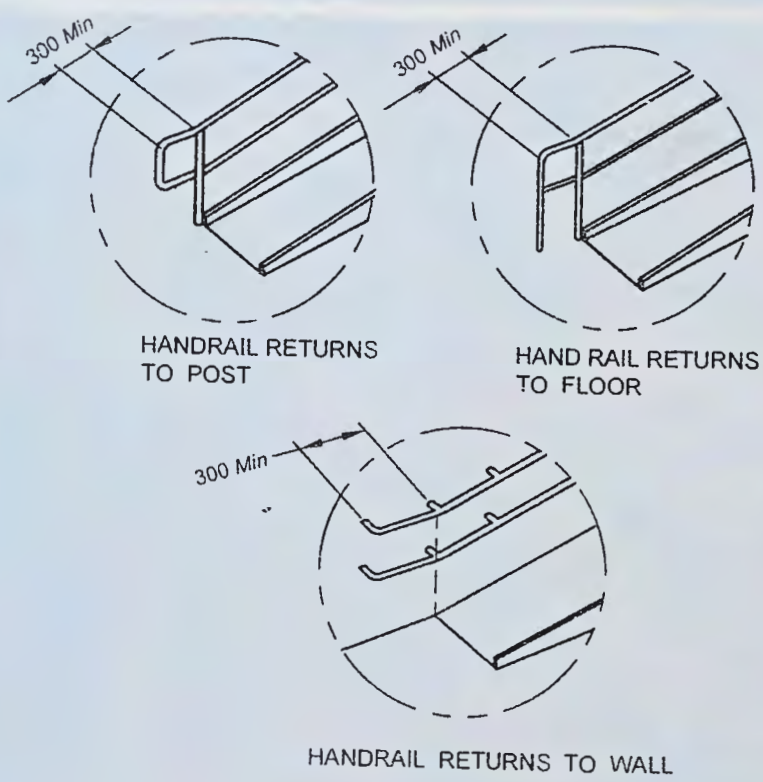

All dimensions in millimetres.

FIG. 54 TYPICAL HANDRAIL EXTENSIONS

e) be free of any sharp or abrasive elements;

f) have a minimum clear space of 50 mm to 65 mm from the wall;

g) be installed at a height of 700 mm to 900 mm;

h) be able to bear a weight of 1.7 kN; and

j) contrast with the wall/surface behind.

B-6 LEVEL CHANGES

B-6.1 General

Vertical circulation and level changes shall be designed, constructed and managed so that they can easily be understood and used by all people. Vertical circulation includes the provision of ramps, stairs and lifts, as well as escalators, moving walks and lifting platforms.

B-6.2 Ramps

A ramp is a sloping pathway leading from one level to another. Ramps of an appropriate design shall be provided at all changes in level other than those served by an accessible lift or accessible lifting mechanism accommodating the specific requirements of persons with disabilities.

B-6.2.1 *General*

Ramps allow persons with reduced mobility to move from one level to another. However, many ambulant persons with disabilities negotiate steps more easily and safely. Hence it is preferable to provide accessibility by both steps and ramps.

Ramps shall meet the following general requirements:

a) Wherever the rise of a ramp exceeds 300 mm, an additional flight of steps shall also be provided as described in **B-6.3**, shall be provided for ambulant persons. An isolated single step is not acceptable hence; a ramp is preferred to a single step.

b) Where there is a large change in elevation that requires multiple ramps and landing combination, other solutions such as lifts should be considered.

c) Ramps should not ideally connect straight to doors as wheelchair users need a levelled platform at the end of the ramp to manoeuvre and negotiate opening the door.

d) A curved ramp is not a preferred design solution. Similarly, a cross fall may put a wheelchair user at risk and may adversely affect steering, particularly on manually propelled chair.

e) Shiny, polished surface materials that cause glare shall not be used for ramps.

f) Single row of tactile warning blocks (TGSI) shall be placed as per **B-2.5** at the beginning and end of each ramp. This shall be placed 300 mm before the beginning and end of each ramp run to indicate the level change to visually impaired persons.

B-6.2.2 *Gradient*

The gradient shall be constant between landings. The minimum specifications for ramp gradients addressing different level differences are given in Table 10 (*see also* Fig. 55).

B-6.2.3 *Width*

The minimum clear width of a ramp (exclusive of handrails) shall be 1 200 mm and shall increase correspondingly as the level difference addressed by the ramp increases as per Table 10.

B-6.2.4 *Surface*

Ramps and landing surfaces shall be non-glary, smooth, level, even and slip resistant even when wet. Outdoor ramps and their surface shall be designed to prevent water from accumulating on the walking surfaces. The surface finish shall be hard and suitable for the volume of traffic that the ramp is likely to experience.

B-6.2.5 Internal ramps should, if possible, be avoided. Where required, internal ramps shall be designed in accordance with the following additional criteria:

a) No series of ramps should rise more than 2 000 mm in total. If this is the case, an alternative should be provided, for example a lift.

Table 10 Requirements for Ramp

(*Clause* B-6.2.2)

Sl No.	Level Difference	Maximum Gradient of Ramp	Ramp Width mm	Handrail on Both Sides	Other Requirements
	(2)	(3)	(4)	(5)	(6)
i)	150 mm to 300 mm	1:12	1 200	√	—
ii)	301 mm to 750 mm	1:12	1 500	√	Landings after every 5 m of ramp run
iii)	751 mm to 3 000mm	1:15	1 800	√	Landings after every 9 m of ramp run
iv)	More than 3 000 mm	1:20	1 800	√	Landings after every 9 m of ramp run

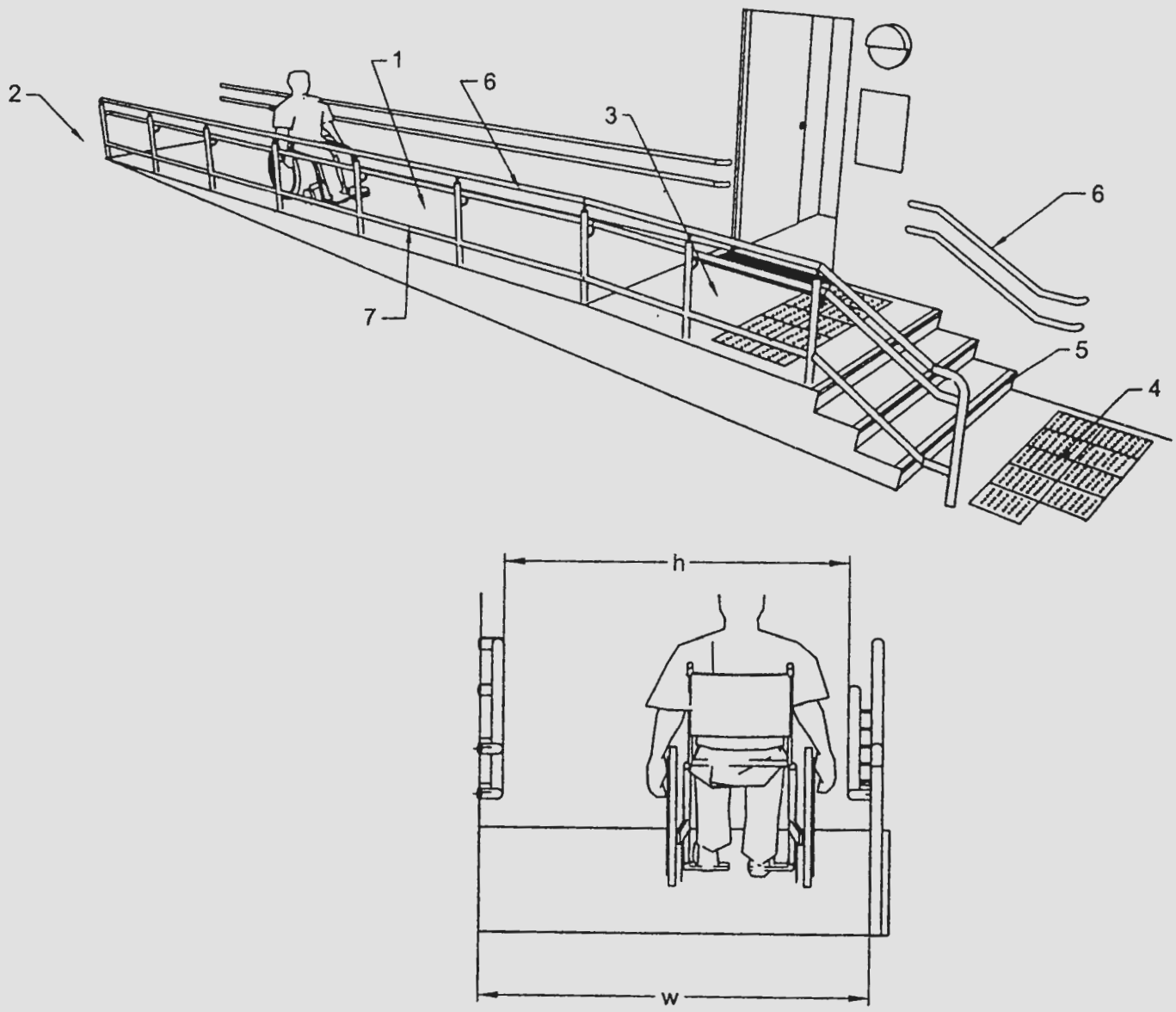

Key

1 Ramp surface (*see* Table 10 for maximum slope and length)
2 Horizontal landing
3 Horizontal landing
4 Tactile ground surface indicator in front of stairs
5 Complementary stairs with markings
6 Handrails on both sides of ramp and stairs
7 Upstand, *Min* 150 mm
h Width between handrails
w Width of ramp surface

FIG. 55 EXAMPLES OF RAMP WITH SLOPE 1:20 AND HORIZONTAL LANDINGS AT BEGINNING AND END

b) An internal ramp should have the lowest practical gradient. In order to avoid trips and falls during a fire evacuation, a gradient of 1:15 should be the maximum permissible gradient within a building.

c) The minimum illumination at the top and bottom of the ramp should be 200 lux and 150 lux in between the bottom and top.

B-6.2.6 *Landings*

An end landing shall be provided at the bottom and the top of a sloped path, a stepped path, or a ramp and also where the run changes direction. The area of the end landing may be a part of the continuing path (*see* Fig. 56). The length of an end landing and an intermediate landing shall be not less than 1 500 mm. Where the ramp run changes direction, the minimum landing dimensions shall be 1 500 mm × 1 500 mm. The area of a landing shall be clear of any obstruction including the path of swing of a door or a gate.

Landings shall also be provided at regular intervals of not more than 9 000 mm of every horizontal run. It shall conform to other provisions of this annex if served by a doorway. If the end landing follows or precedes a turn for a pathway or an entrance, the minimum dimension of the landing shall be minimum 1 500 mm × 1 500 mm.

The width of ramp and consequently the dimension of landing in the direction perpendicular to the direction of ramp shall also be governed by the provisions of Table 10.

B-6.2.7 *Handrails for Ramps*

A ramp run with a vertical rise greater than 150 mm shall have handrails that are on both the sides and comply with **B-5.5.2**.

B-6.2.8 *Edge Protection/Guarding Along Ramps*

Ramps and landings not adjacent to a wall should have an edge protection in form of a 75 mm kerb. Guarding along ramps in pathway shall also meet the requirements in **B-2.2.6**.

B-6.3 Stairs

B-6.3.1 *General*

Steps and staircases are intended as an alternative to lift access in buildings and shall be of adequate design to allow all persons, with or without a disability, to travel safely and independently.

Stairs shall not be the only means of moving between floors. They shall be supplemented by lifts (*see* **B-6.4**) and/or ramps (*see* **B-6.2**). Staircases shall comply with the following general requirements:

a) The materials selected for the surface finish of the stairs shall be firm and slip resistant, especially if surfaces are likely to become wet due to location or use, or if spillage occurs. Slippery surfaces like granite, glazed tiles shall be avoided.

b) Shiny, polished surface materials that cause glare shall not be used for stairs or ramps.

c) Risers, treads, maximum number of risers per flight and minimum width of stairs shall be in accordance with **12.18**.

d) The riser of a step shall not be open.

e) The stairs landing shall be minimum 1 500 mm deep (*see also* **B-6.2.6**). In case of one or two family dwelling units, it may be reduced to 1 200 mm.

f) Steps shall be of a consistent height and depth throughout the staircase.

g) Projecting nosing and open stairs shall not be provided to minimize the risk of stumbling.

h) Spiral stairs shall be avoided.

j) Stairs shall have handrails comply with the requirements given in **B-5.5.2**.

B-6.3.2 *Tactile Warning Blocks (TGSI) for Stairs*

Tactile ground surface indicators (warning type) shall be installed 300 mm before the beginning and 300 mm after the end of each flight of steps to aid people with visual impairments. It shall be in accordance with **B-2.5**.

Tactile warning strips shall also be provided at landings. For landings leading to a floor or those enclosed by wall, railing or balustrade, tactile warning strips of 300 mm in width shall be provided; for those leading to an open space or the entrance/exit of a building, the tactile warning strips shall be 600 mm in width. In this case, Braille and tactile information signs shall be provided on the adjacent wall to indicate the presence

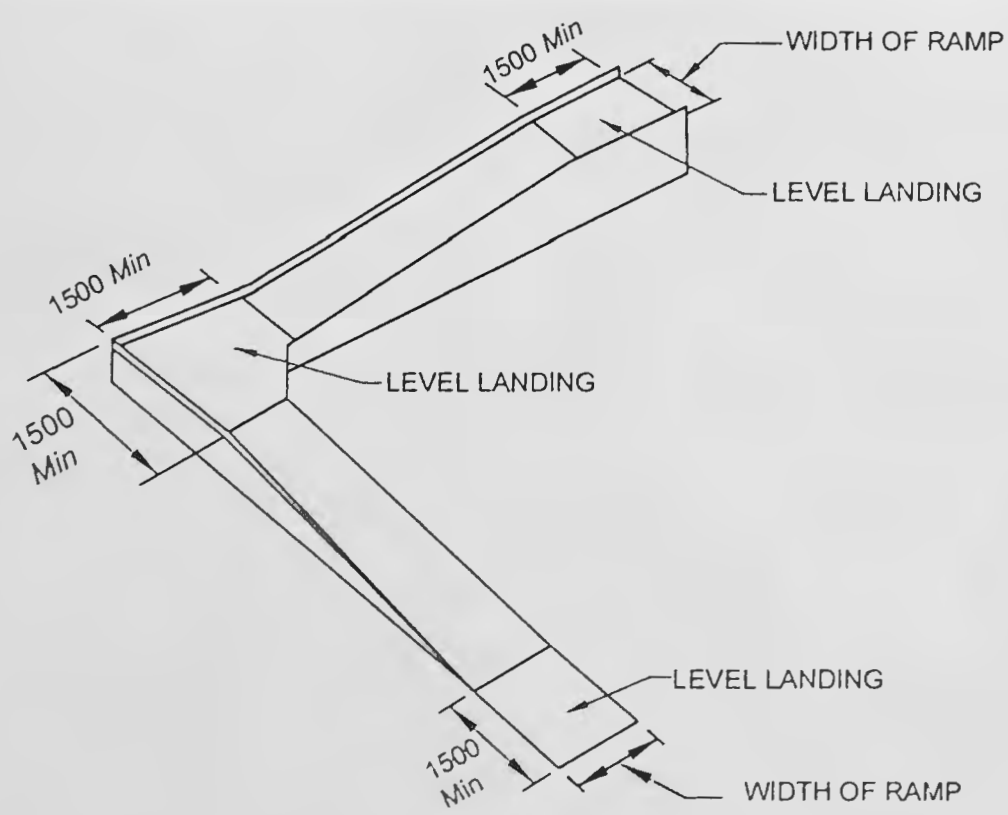

All dimensions in millimetres.

FIG. 56 LANDING DETAILS FOR RAMPS

of an opening. For a staircase with intermediate steps between two flights, the provision of tactile warning strips shall follow the same arrangement.

B-6.3.3 *Avoidance of Projection in the Stairs*

No appliances, fixtures or fittings shall project beyond 90 mm from the surface of any wall in a staircase below a level of 2 000 mm, measured above the treads of the staircase. If such a projection is unavoidable, the same shall also be extended downwards to the level of the treads. However, in no case the width of the staircase shall be less than that prescribed in **12.18**.

B-6.3.4 *Colour Contrasting and Illumination*

There shall be colour contrast between landings, and the steps. Step edges shall contrast in colour to the risers and the treads. Contrast colour bands 50 mm wide shall be provided on edge of the tread. Illumination level of minimum 150 lux shall be maintained on the stairs.

B-6.3.5 *Soffit*

Soffit of the stairs, shall be cordoned off either by building a wall in front of it or by putting handrails to guide persons around the space. It shall comply with the requirements of **B-2.6.3** related to headroom in circulations spaces (*see also* Fig. 35).

B-6.4 Lifts

B-6.4.1 *General*

It is recommended that in multi-storeyed buildings there be at least one lift accessible to transport persons with disabilities at all usable levels. Such lifts shall meet the following general requirements:

a) Lift shall be located on accessible routes.

b) Accessible landings at lift entrance shall be provided on each eligible floors.

c) Lifts shall be marked with the international symbol of accessibility.

d) Directional signs indicating the location of an accessible lift shall be provided at a location that is clearly visible from the accessible building entrance. The directional signs shall incorporate a representation of the International symbol of accessibility (*see* Fig. 57).

e) A sign indicating the number of the floor arrived shall be provided on each lift landing on the wall opposite the lift in big fonts with good colour contrast.

f) It is recommended to install a floor directory of the main facilities and services available on the lift landing, along with an accessible emergency egress route that clearly indicates the location of the nearest refuge area for persons with disabilities.

FIG. 57 WAY FINDING SIGNAGE FOR LIFT LOCATION

B-6.4.2 *Lift Size*

The minimum size of the lift shall be 1 500 mm wide by 1 500 mm deep, that allows easy manoeuvrability of wheelchair users (*see* Fig. 58).

B-6.4.3 *Lift Door*

The clear opening of entrance to the lift car shall be at least 900 mm. The doors shall be constructed as automatic horizontal sliding doors. The lift door shall be contrasting in colour from the adjoining wall. There shall be no difference in level between the lift door and the floor surface at each level. The gap between the lift door and building floor shall not be more than 12 mm.

A non-contact sensor device shall be provided in the door opening to detect an entering or exiting passenger or an assistive device and prevent the risk of the passenger or assistive device from being hit by the leading door panel(s). The sensor device shall cover at least 2/3 of the door height measured from a distance of 25 mm above the door sill. Time of closing of an automatic door shall be more than 5 s and the closing speed shall not exceed 0.25 m/s. The door opening time shall be adjustable to suit the conditions where the lift is installed. A mechanism to increase this time shall be installed to be customized by a user with mobility impairments (for example by means of a button outside the car to call the lift to the floor for it to arrive with extended door opening time, and a button marked with a wheelchair symbol inside the car with the same purpose). Under normal operation the levelling accuracy of the lift car shall be ±12 mm.

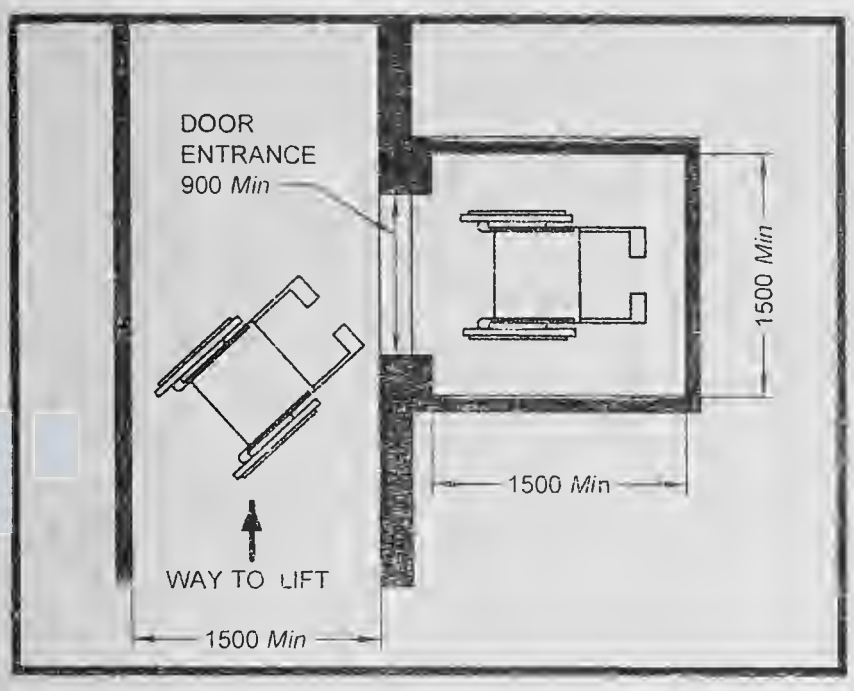

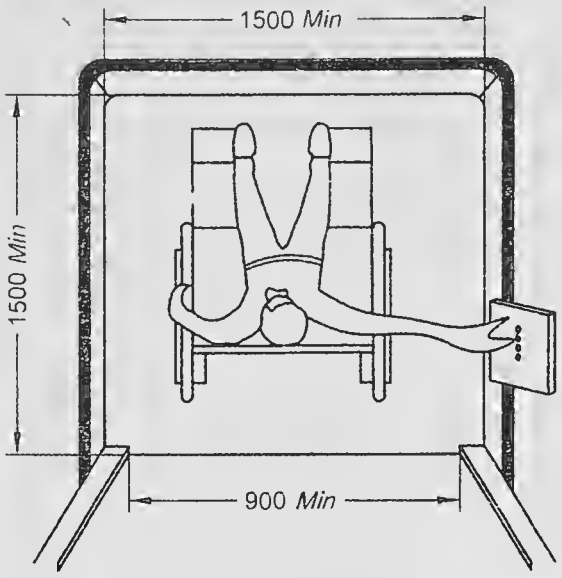

All dimensions in millimetres.

FIG. 58 LIFT SIZE

B-6.4.4 *Call Button*

The call button located outside the lift shall have a clear floor space of at least 900 mm × 1 200 mm with no obstruction placed to prevent a wheelchair user from reaching the call button and shall be installed at a height between 800 mm and 1 000 mm (*see* Fig. 59).

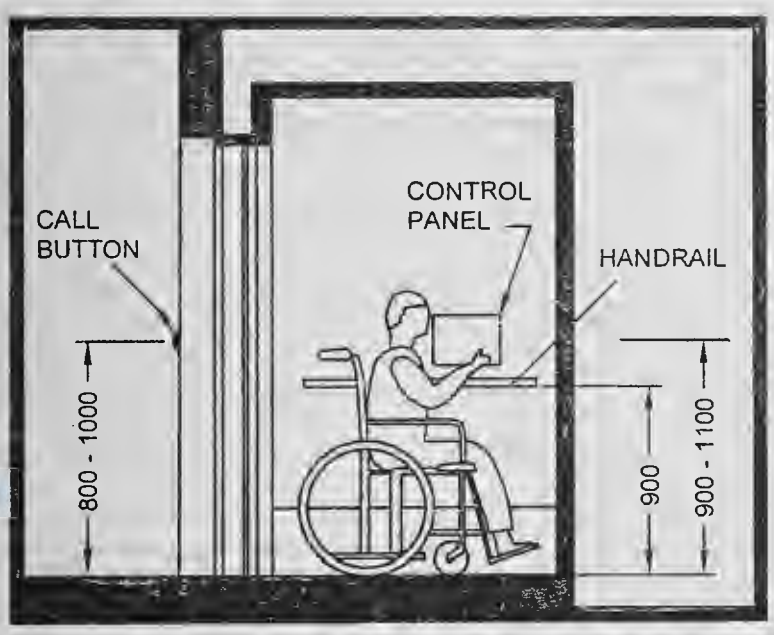

All dimensions in millimetres.

FIG. 59 PLACEMENT OF LIFT ACCESSORIES

B-6.4.5 *Control Panel*

Touch control panels shall not be used in any case as they are not accessible to visually impaired persons. The control panel inside the lift shall meet the following requirements (*see* Fig. 59):

a) It shall be placed at a height of between 900 mm and 1 100 mm from the floor level.

b) The control buttons may be placed either horizontally or vertically within this space.

c) It shall have buttons with Braille/raised letters and in sharp contrast from the background to aid people with visual impairments.

B-6.4.6 *Handrails*

Handrails shall comply with **B-5.5.2** and shall be placed at a height of 900 mm from the floor level. These shall be fixed on both sides and at the rear of the lift.

B-6.4.7 *Audio and Visual Indicators*

The lift shall have a voice announcement system along with a visual display to indicate the floor level and also the information that the door of the cage is open or closed for entrance or exit. The announcement system shall be clearly audible, that is, the announcement shall be of the order of 50 dB.

B-6.4.8 *Other Requirements*

In addition to the requirements given in **B-6.4.1** to **B-6.4.7**, following requirements shall also be complied with:

a) Internal walls shall have a non-reflective matte finish in a colour and tone contrasting with the floor.

b) The floor of the lift car shall be rigid and have a non-reflective matte finish and shall be slip resistant having similar frictional qualities to the floor of the lift landing to decrease the risk of stumbling.

NOTE — A lift floor with a high LVR reassures blind and partially sighted people that they are not stepping in to an open lift shaft.

c) The provision of a mirror on the wall of the lift car opposite the lift door is a positive aid to navigation for wheelchair users. It allows

the wheelchair user to see if anyone is behind them and also to see the floor indicator panel. The mirror should not extend below 900 mm from the lift floor to avoid confusing people with impaired sight.

d) Internal car lighting should provide minimum level of illumination of 100 lux at floor level, uniformly distributed, and avoiding the spotlights.

e) *Emergency warning* — The car shall have an alarm device (two-way communication system) permanently connected to a manned security point according to the following:

   1) The device shall ensure voice communication in both directions with an organization in charge of passenger rescue or with the person in charge of the safety of the building.

   2) The operating force for alarm button shall be minimum 2.5 N and maximum 5 N.

   3) The device shall provide visual and audible information feedback for passengers confirming that, the alarm has been sent, using a yellow enlightened bell-shaped symbol; and the alarm has been received, voice communication established, using the green enlightened symbol consisting of two heads.

For other requirements, reference shall be made to good practice [3(8)].

B-6.4.9 *Use of Lifts for Fire Evacuation*

A fundamental objective of fire engineering design for egress is that there shall be alternative, safe and intuitive means of egress from the scene of a fire; these routes shall be available to all building users.

NOTE — Manual handling of wheelchairs occupied by their users in a fire evacuation staircase, even with adequate training for everyone directly and indirectly involved, is hazardous for the person in the wheelchair and for those people giving assistance. The weight of an average unoccupied powered wheelchair, alone, makes manual handling impractical. Evacuation chair devices can allow vertical movement on stairs of people with mobility impairments. Some evacuation chairs require a wheelchair user to transfer out of their own chair into the evacuation chair. This transfer operation requires manual handling (for example handling of one work colleague by others), and there is a risk of injury during the transfer process or if the wheelchair user uses an oxygen tube, or has a catheter or a colostomy bag. The transfer can also infringe the independence and dignity of the individual concerned.

Evacuation of occupants through assisted evacuation by use of fireman's lift should be planned while evacuation through designated lifts suitably planned and installed for use of occupants for safe evacuation are desirous to be provided.

Such lifts used for evacuation should be easily accessible, clearly identifiable and be suitably protected from the increase of smoke, heat and flame. The controls for the lift shall be located in the areas where users must wait and this area shall be designed to ensure a tenable environment provided during the entire time that the evacuation is taking place.

Such lifts should not be used for evacuation unless built for this purpose and suitably protected by the building design.

The fire evacuation shall comply with the requirements given in Part 4 'Fire and Life Safety' of the Code and lifts for evacuation including fireman's lift shall comply with the requirements given in Part 8 'Building Services, Section 5 Lifts, Escalators and Moving Walks: 5A Lifts' of the Code.

B-6.5 Escalators and Moving Walks

Escalators and moving walks are very common in public buildings. They can greatly facilitate circulation for all building users in large, extensive and complex modern building types.

However, the location of escalators and moving walks should always be considered in relation to the position of adjacent fire protected lift shafts and lobbies, staircases and their associated areas of rescue assistance.

During normal periods of maintenance and servicing, escalators and moving walks will not be operational.

In the event of a fire emergency, building users attempting to evacuate usually tend to re-trace their routes of entry, whatever the nature of the hazard and wherever it is located. It should be assumed that the electrical supply to escalators and moving walks is terminated or turned off during such emergencies.

For important reasons of safety, therefore, inclined moving walks should comply with the requirements for ramps in buildings with respect to slope and length.

For important reasons of safety, special warning notices and indicators shall be provided at the top and bottom of escalators where step rises reduce suddenly and dramatically when not operational.

Some individuals, in particular older people, might have more than one impairment. Some individuals are not able to use an escalator or moving walk independently and rely on assistance/support being provided by a companion.

Safety shall be the prime consideration when choosing or installing escalators and moving walks.

Lifts are the preferred method of vertical travel for most people with disabilities and in particular wheelchair users.

Persons with a wheelchair generally cannot use horizontal moving walks. An inclination of up to 6° will exclude a majority of wheelchair users from using a horizontal walkway independently. Hence, alternative, like an accessible battery carts, may be provided to them in appropriate cases. Moving walks shall be free of projecting objects and obstacles up to a height of 2 100 mm. A minimum level of illumination of 100 lux shall be provided on moving walks.

A surface of the escalator that contrasts visually with the approach and the use of audible signals or pre-recorded messages that indicate the start and finish of the escalator help blind and partially sighted people. Such signals or recording are not normally provided by the escalator manufacturer as standard.

Signs should be provided to indicate the location of other facilities, such as lifts, and these facilities should be in close proximity to the escalators and moving walks and be easy to find.

Reference shall also be made to other requirements given in **5.2** of Part 8 'Building Services, Section 5 Lifts, Escalators and Moving Walks: 5B 'Escalators and Moving Walks' of the Code.

B-6.6 Vertical and Inclined Lifting Platforms

B-6.6.1 *General*

Where it is impracticable or impossible to provide an accessible lift or a ramp in an existing building, vertical or inclined lifting platforms should be provided as a reasonable alternative for vertical circulation within the building. These are special passenger elevating devices for persons with disabilities. These may have either vertical or an inclined movement. These shall be able to be used safely, independently and also with an accompanying person. All control devices shall also be accessible and usable for powered wheelchair and walking aids users. If driving, guiding or lifting mechanisms present hazards at the sides of a platform, the mechanisms shall be guarded to protect the users. The guarding shall be smooth, hard and continuous.

B-6.6.2 *Vertical Lifting Platforms* (*see* Fig. 60)

For maximum level changes of 2 500 mm, vertical lifting platforms may be installed. For level changes of more than 1 200 mm, the lift shall be placed in a closed structure with doors at different accessible levels. Vertical lifting platforms may have a variety of openings for entry and exit.

B-6.6.3 *Inclined Lifting Platforms* (*see* Fig. 61)

Inclined lifting platforms consist of three elements; a railing, an electric generator and a moving platform. The operating system of the lift may be lateral or

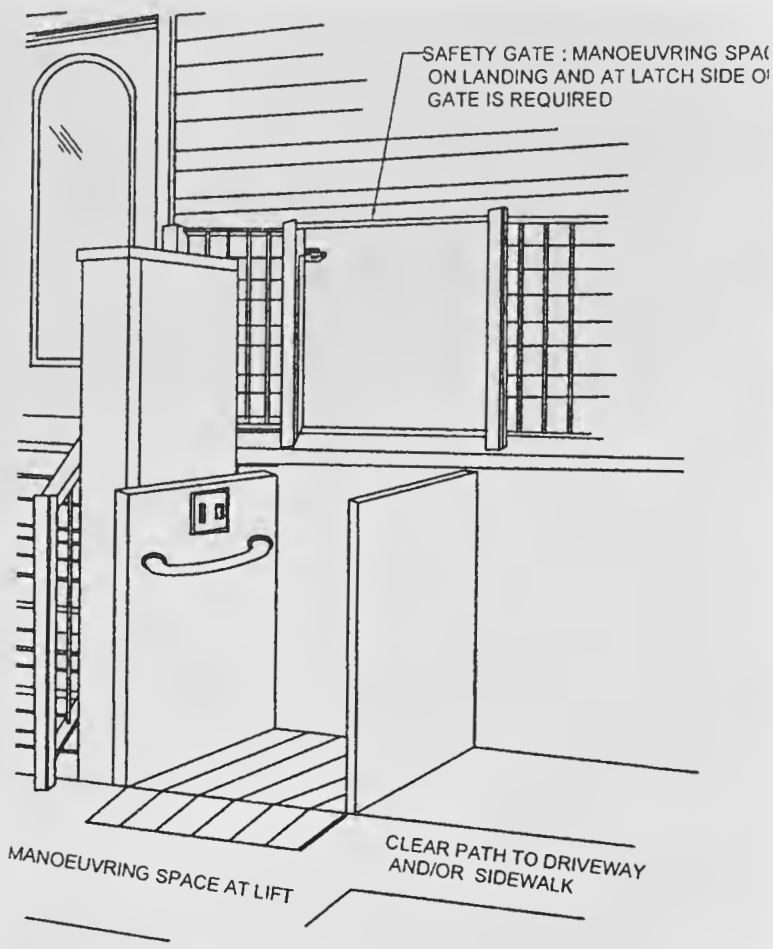

FIG. 60 VERTICAL LIFTING PLATFORMS

suspended. Inclined lifting platforms may be installed along the stair wall as long as they do not obstruct the required width of the exit. The platform may be folded when not in use.

Platform lifts may be installed on all types of stairs including switch back stairs, that is, those with a rotation of 180° and spiral staircases. Inclined lifting platforms are usually used to connect one or more floors or to overcome split levels in existing buildings.

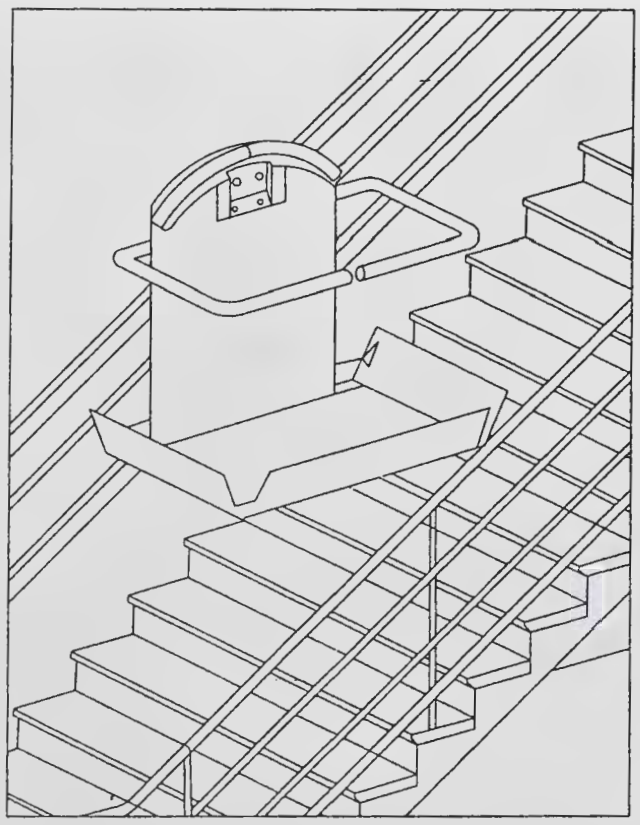

FIG. 61 INCLINED LIFTING PLATFORMS

B-6.6.4 *Platform Lift Dimensions*

The minimum width of the platform lift shall be 1 100 mm and the minimum length shall be 1 400 mm for the use of manual and powered wheelchairs with assistance.

In existing buildings of minor public importance and with few visitors, where sufficient space is not available, other dimensions may be considered, for example 900 mm × 1 250 mm.

B-7 OPERATING CONTROLS AND DEVICES

B-7.1 General

The design and construction of operating controls and devices should be such as to enable them to be operated safely and independently by everybody.

Operating controls and devices include, but are not limited to,

a) door handles and locks;
b) lever, mixer or cross-head taps;
c) activation devices;
d) window openers and locks; and
e) electric outlets and switches.

The operable part of controls shall be located adjacent to the clear floor space. Controls should be easy to use, for example by hands-free operation or by a closed fist or using the elbow. Minimum manual effort should be required, as for opening and closing doors.

All switches and controls should be easy to understand without requiring specialist knowledge.

Sufficient lighting of the control devices and all relevant information should be provided.

Round or oval type door knobs are not suitable for people with mobility impairment, for people of small stature or less strength, and for children.

The use of photoluminiscent pictogram signs shall be provided, where appropriate.

B-7.2 Location, Heights and Distances

Devices, controls (fuse boxes, switches, push-buttons, intercoms, etc), etc, shall be installed at an accessible height for reaching and operating, between 800 mm and 1 100 mm above floor level and shall be located at a minimum of 600 mm with a preference of minimum 700 mm, from any internal corner.

NOTE — As an exception, electrical wall socket outlets, telephone points and TV sockets can be located at a minimum height of 400 mm above floor level.

Requirements and recommendations on lifts landing controls and car controls shall be as per **B-6.4.4**, **B-6.4.5** and good practice [3(8)].

Control devices placed on a horizontal surface should be placed at a height between 800 mm and 900 mm and within 300 mm from the edge of the surface.

Reading metres should be located between 1 200 mm and 1 400 mm from the floor.

Heights of switches, socket outlets, reading controls and controls on a horizontal surface are illustrated in Fig. 62.

Safety provisions as given in Part 8 'Building Services', Section 2 'Electrical and Allied Installations' of the Code shall be followed.

Door handles should be placed according to Fig. 63. In Fig. 63, the figure on the left shows the height of a handle for pushing or pulling the door, the middle figure shows a vertical door handle, and the figure on the right shows an example of a pull rail that may allow a wheelchair user to close the door behind him, for example in a toilet.

If fire and safety related, all controls should be intuitive and obvious to use. Wherever, fire extinguishers are provided, one fire extinguisher should have a maximum weight of 5 kg or 6 litre or even less.

Fire alarm calls should be located between 1 000 mm and 1 100 mm above floor level.

B-7.3 Location of Controls from Walls, Corners and Opening Doors

The minimum distance of the centre of switches and devices to control doors or windows, etc, shall be 600 mm from any internal corner or any projecting element (*see* Fig. 64) and the recommended distance is 700 mm.

Controls for powered door openers to hinged doors should be located so that the doors do not interfere with wheelchairs, canes, mobility aids, etc. Controls for powered door openers to hinged doors should be located at a minimum of 1 000 mm from the swing of the arc of the door so that the door is clear of people in wheelchairs, scooters or other assistive devices (*see* Fig. 65). The opening time shall be sufficient for a person using wheelchair or assisting devices to pass through the door safely before it closes.

B-7.4 Operation

To help people with diverse abilities, the controls as far as possible shall be operable by one hand and require no tight grasping, pinching or twisting of the wrist.

For persons with reduced dexterity or impaired vision, electrical switches should have large push plates.

Grab bars and door or window handles should be at least 80 mm long. Lever handles should be

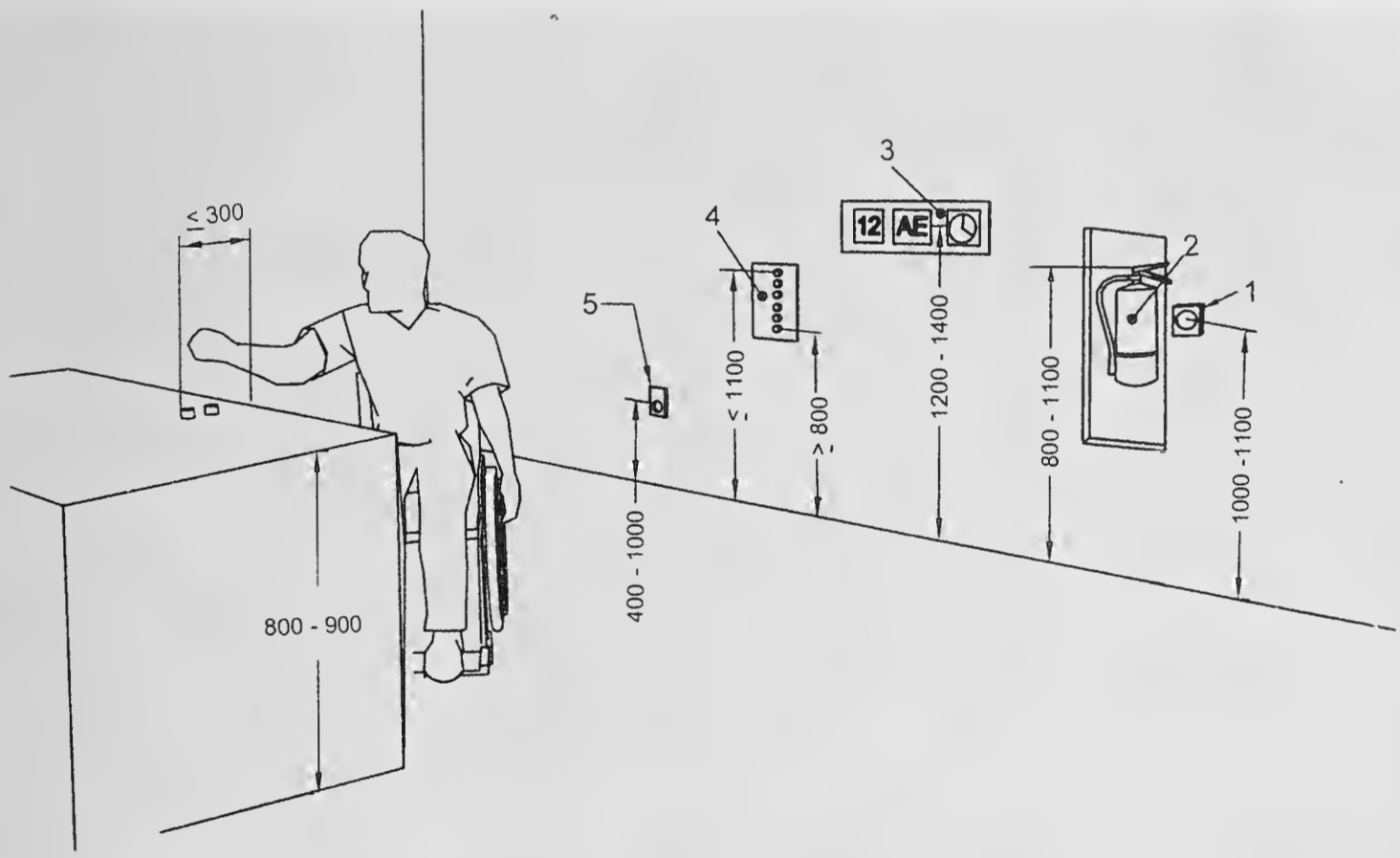

Key

1 Fire alarm, cali point
2 Fire extinguisher
3 Meter indicators
4 Control devices
5 Socket outlets

All dimensions in millimetres.

FIG. 62 HEIGHTS OF SWITCHES, SOCKET OUTLETS, READING CONTROLS AND CONTROLS ON A HORIZONTAL SURFACE

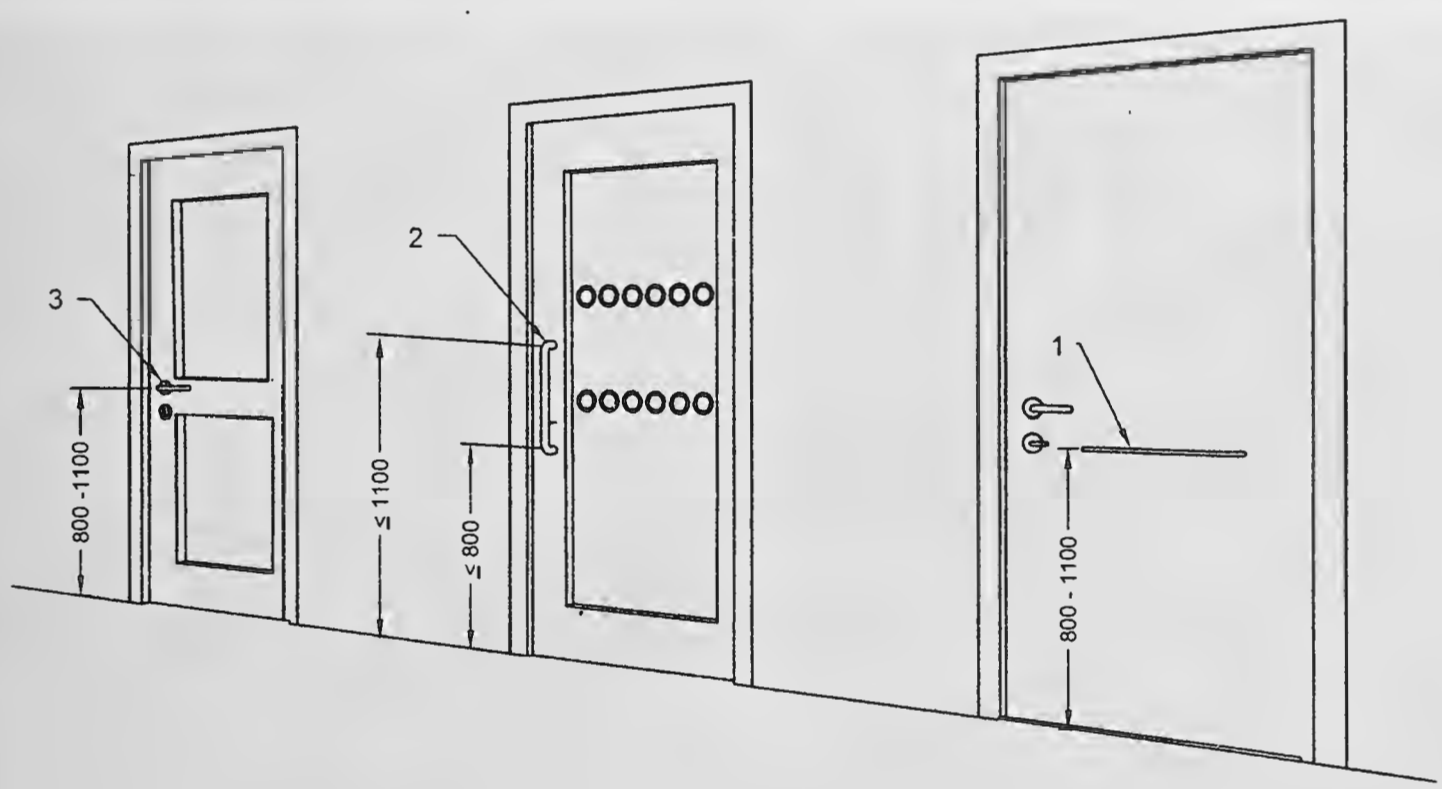

Key

1 Horizontal pull bar, toilet room door
2 Vertical handle
3 Lever type handle

All dimensions in miilimetres.

FIG. 63 DOOR HANDLE TYPES AND HEIGHTS

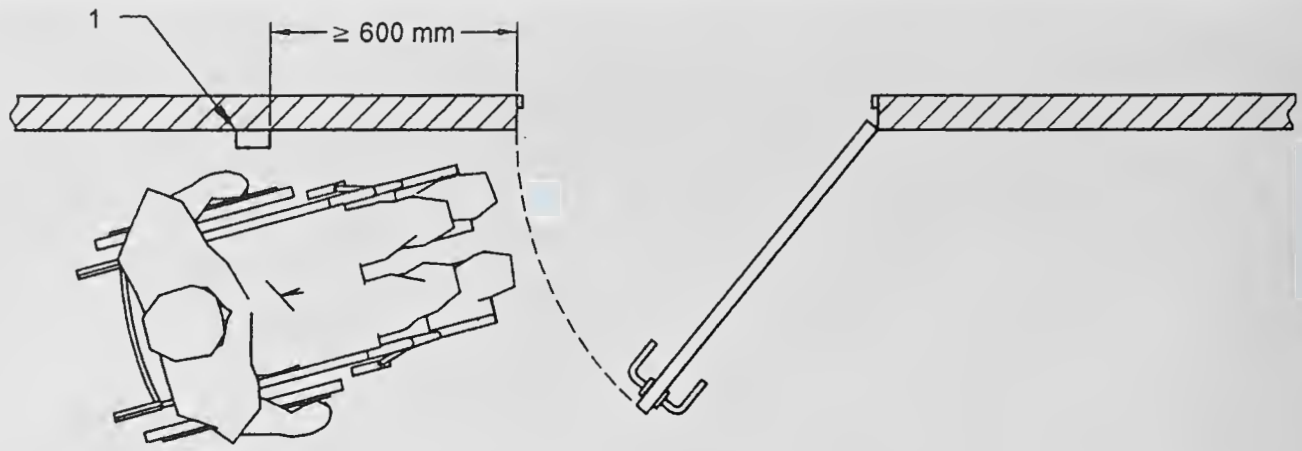

Key
1 Door control, access control

FIG. 64 POSITION OF DOOR AND ACCESS CONTROLS

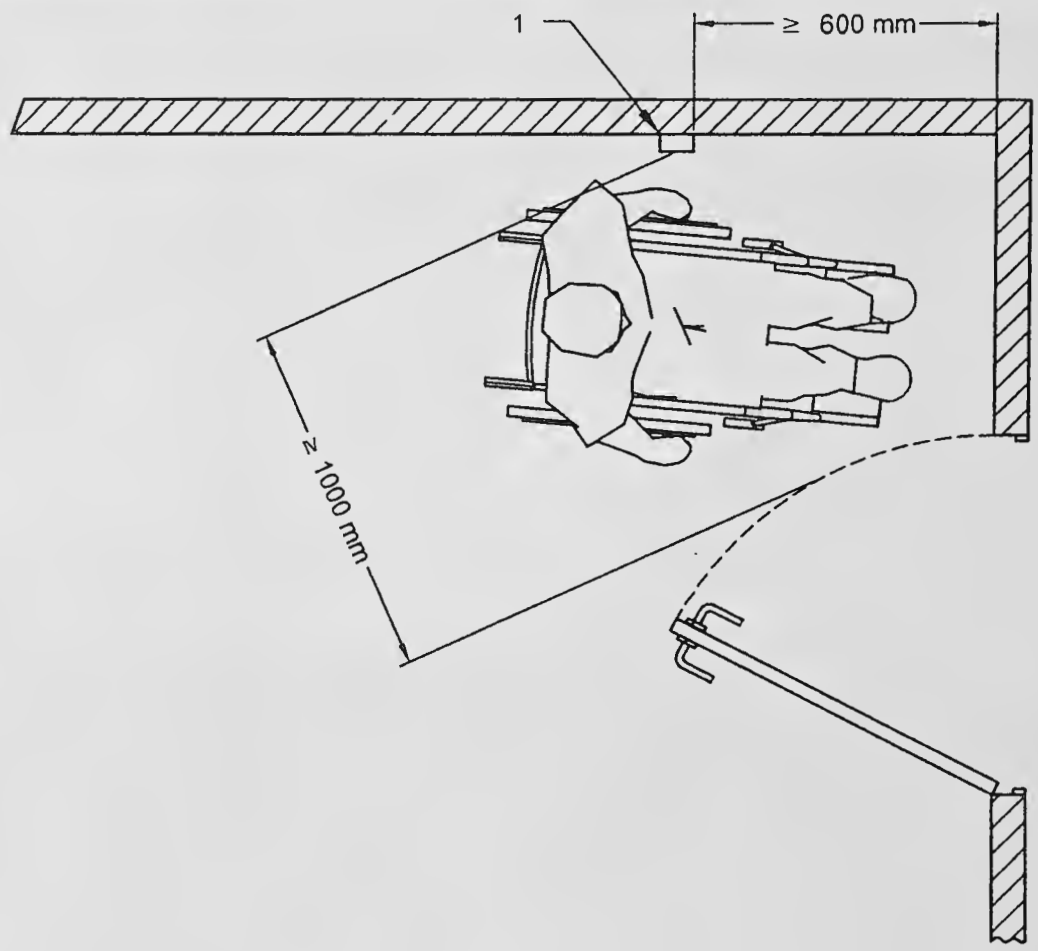

Key
1 Door control, access control

FIG. 65 DISTANCE OF CONTROLS FOR POWERED DOOR OPENERS

between 19 mm and 25 mm in diameter; 'D-Lever' handles are preferred (*see* Fig. 66). A vertical bar for sliding doors should be 30 mm to 50 mm in diameter. The clearance between the bar and the wall should be 45 mm to 65 mm. The backset of a latch/lock should be a minimum of 30 mm. Other door furniture should be 30 mm from the door edge. Suitable clearance should be provided between adjacent fixtures and fittings to prevent accidental operation.

Operating force on control buttons and push plates should be 2.5 N to 5.0 N. Control for drinking water fountains shall be operable with one hand with an operative force of not more than 20 N.

B-7.5 Identification

Buttons and devices should be identified by visual contrast. Information should be in raised tactile and Braille signage. All important controls should have an integral Braille indication.

B-7.6 Usability

Control devices for different functions should be

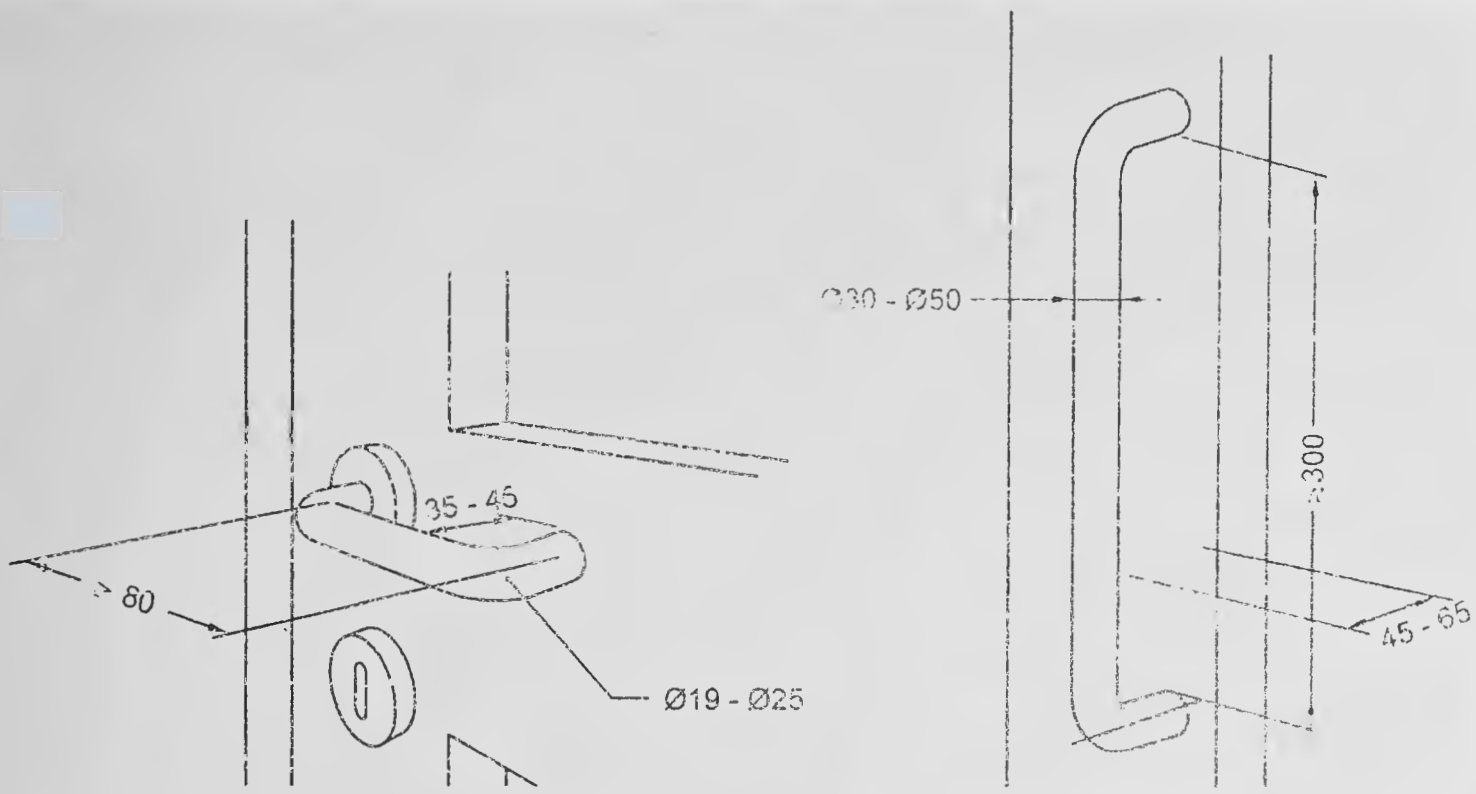

All dimensions in millimetres.

FIG. 66 EXAMPLES OF D-LEVER AND VERTICAL DOOR HANDLES

different. Control devices for similar functions should have a similar design and activation mechanism and be the same for identical functions throughout the facility.

B-7.7 Telephones

B-7.7.1 Telephones shall be on a clear accessible route with approach from the front or the side (*see* Fig. 67). All information should be provided in at least two of visual, oral and tactile forms. The telephone keypad shall have a tactile point on the number five (*see also* **B-7.9**).

B-7.7.2 *Public Telephones*

Public telephones shall be located beside the access route and shall be easily detected by people with vision impairments.

Where more than one public telephones are provided, at least one phone shall be accessible.

A clear knee space of minimum 700 mm in height and minimum 600 mm in depth and 900 mm in width shall be provided underneath to accommodate wheelchair user's knee (*see* Fig. 68).

Counter tops, where provided, shall be between 750 mm and 800 mm from the floor. The depth of the counter top shall be not less than 480 mm.

Side protection shall be considered according to **B-2.6.2**.

The height of all operable parts of the telephone shall be between 800 mm and 1 100 mm. The minimum length of the telephone cord shall be 900 mm.

The international symbol of accessibility shall be displayed to identify the location of such telephones.

If a public telephone is provided in an enclosed booth the opening of the booth shall have a clear width of at least 900 mm. The enclosed space shall have clear unobstructed dimensions of at least 900 mm × 1 200 mm, which should not be restricted by fixed seats.

B-7.8 Mailbox/Dropbox

The mail/drop box slot should be located at the height of maximum 1 200 mm. It should have a clear floor space of 900 mm × 1 200 mm.

B-7.9 Vending Machine, Card Access, Dispensing Machines and Automatic Teller Machines (ATMs), etc

Machines for dispensing money, tickets or small goods should be accessible and should be located on an accessible level. The approach to dispensers should be clear and unobstructed, at least 900 mm wide. A knee space of minimum 700 mm in height and minimum 600 mm in depth and 900 mm in width should be provided to ease access for wheelchair users (*see* Fig. 69). The clear area immediately in front of the machine should be at least 1 500 mm × 1 500 mm to allow a wheelchair user to approach the controls sideways, and to turn around after use and to provide some privacy.

Touch screen ticket dispensers at train/bus stations, etc. should not be the only type of ticket dispenser, as they are inaccessible to people with impaired vision. A numeric keypad should also be provided to make it

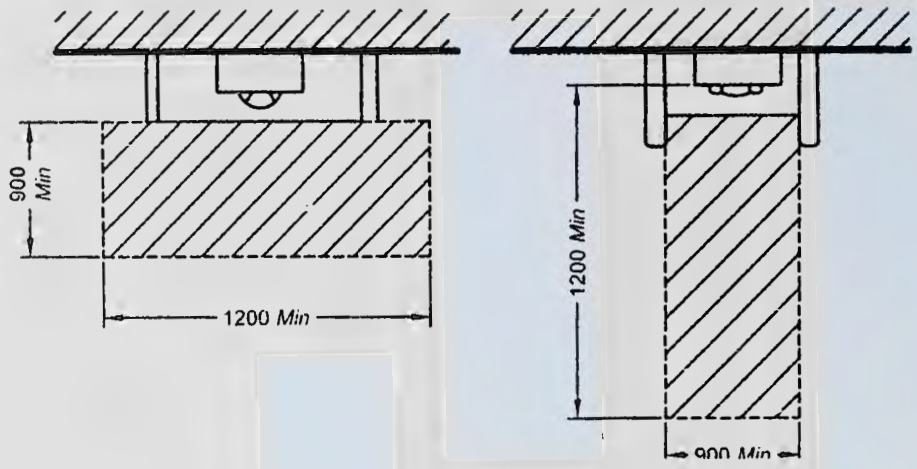

All dimensions in millimetres.

FIG. 67 SPACE ALLOWANCE FOR A WHEELCHAIR USER FOR USING TELEPHONE

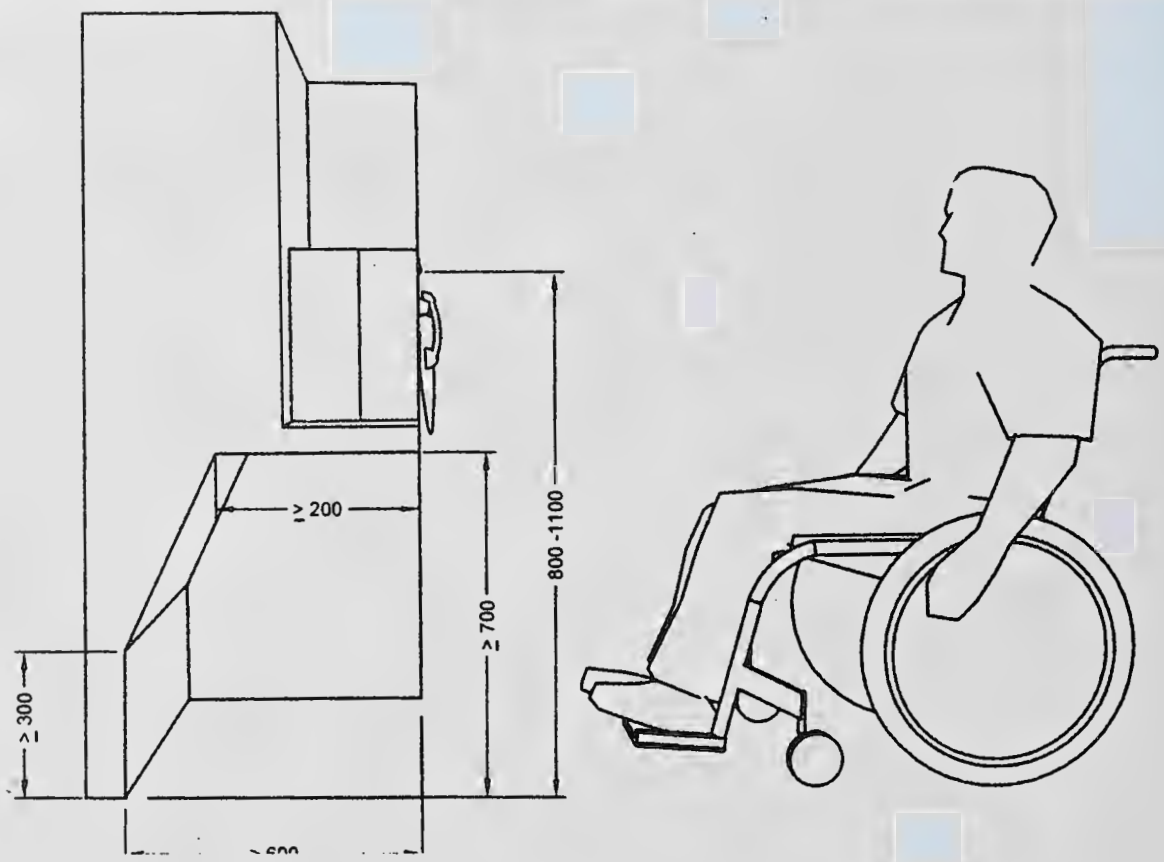

All dimensions in millimetres.

FIG. 68 HEIGHT OF TELEPHONE CONTROLS FOR WHEELCHAIR USERS

accessible for visually impaired users.

Glare from sun, artificial lighting and street lighting on the screen should be avoided.

The operation of the machine should be easy to understand.

Where card access or coin slot is provided, they shall,

a) have a slot located at a height of between 800 mm and 1 000 mm above the floor, preferably between 800 mm and 900 mm,
   1) with its edge bevelled, and
   2) colour-contrasted with the surrounding surface;

b) include tactile graphic symbols on the surrounding surface that,
   1) represent the card, and
   2) identify the orientation of the card/coin insertion; and

c) have both audible (beep) and visual (light) signals to indicate that access has been granted.

Where a keypad is provided, it shall,

1) be located at a height between 800 mm and 1 000 mm from the floor;
2) be colour-contrasted with the background;
3) have characters and symbols on key surfaces

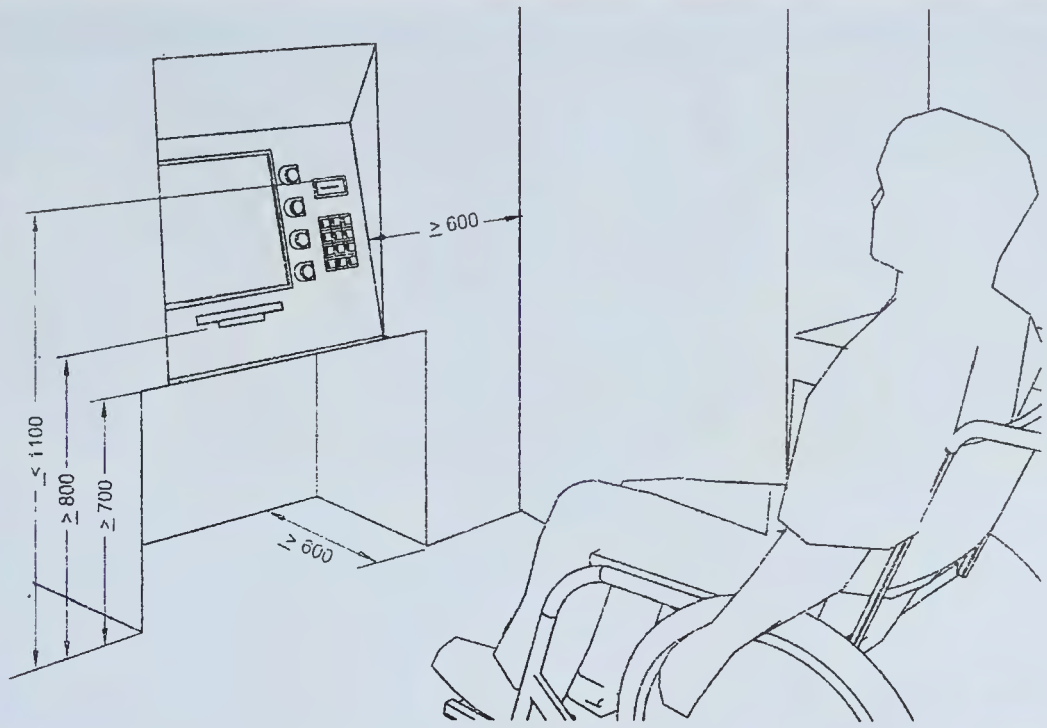

All dimensions in millimetres.

FIG. 69 EXAMPLE OF A VENDING MACHINE

that are colour-contrasted with the key surfaces;

d) where numeric.

1) the keys shall be arranged in a 12-key ascending or descending telephone keypad layout,

2) the number five key shall be tactilely distinct from the other keys; the raised dot on number five shall be 0.7 ± 0.1 mm high and shall have a base 1.5 mm in diameter, and

3) function key surfaces shall have tactile symbols as follows: enter or proceed key: raised circle [o]; clear or correct key: raised left arrow [ ]; cancel key: raised letter × [x]; add value key: raised plus [+] sign; decrease value key: raised minus [–] sign; and

e) have both audible (beep) and visual (light) signals to indicate that access has been granted; and

f) have the keys readable from both a standing and a seated position.

NOTE — For ATMs and similar facilities, other requirements as laid down by the concerned authorities shall be followed.

B-7.10 Security Access Systems

Security access systems shall be designed so as to meet the needs of everyone. This includes the requirements for manoeuvring space and for controls which can be reached comfortably. *See* **B-7.9** for requirements relating to card access and keypads. Security access systems should be usable by everyone. Biometric systems (for example retinal or palm scanners) cannot accommodate all users. To negotiate the security access systems placed at building entrances. such as, airports, railway stations, metro stations, and shopping malls. relevant rules and regulations laid down by the concerned authorities shall be followed.

NOTE — The requirements relating to card access and keypads shall be similar to those for ATMs as laid down by the concerned authorities.

B-7.11 Drinking Water Facility

The drinking water facility (fountains, coolers, taps, etc) shall comply with the following:

a) Wall/Post-mounted cantilevered units shall have a clear floor space of at least 900 mm × 1 200 mm as shown in Fig. 70.

b) The front edge of the unit shall extend 430-480 mm from the wall. It shall have a clear knee space between the bottom of the apron/equipment and floor or ground of at least 900 mm wide, 200 mm deep extending from the front edge of the equipment to back towards the wall, and 700 mm high. It shall have a toe space not less than 900 mm wide, 300 mm high, extending from the back wall to a maximum of 150 mm (*see* Fig. 70).

c) Freestanding or built-in-drinking water units not having a clear space under them shall have a clear floor space of at least 1 200 mm wide × 900 mm in front of the unit as shown in Fig. 71.

d) Spout heights should be between 800-900 mm, measured from the floor to the spout outlet. The maximum distance of the spout from the front edge of the drinking water facility shall be 125 mm. There shall be water glass provision; a minimum 100 mm space below the spout outlet shall be provided to allow for the insertion of a cup or glass.

e) Wall-mounted drinking water provision in an alcove is preferred, because it does not create

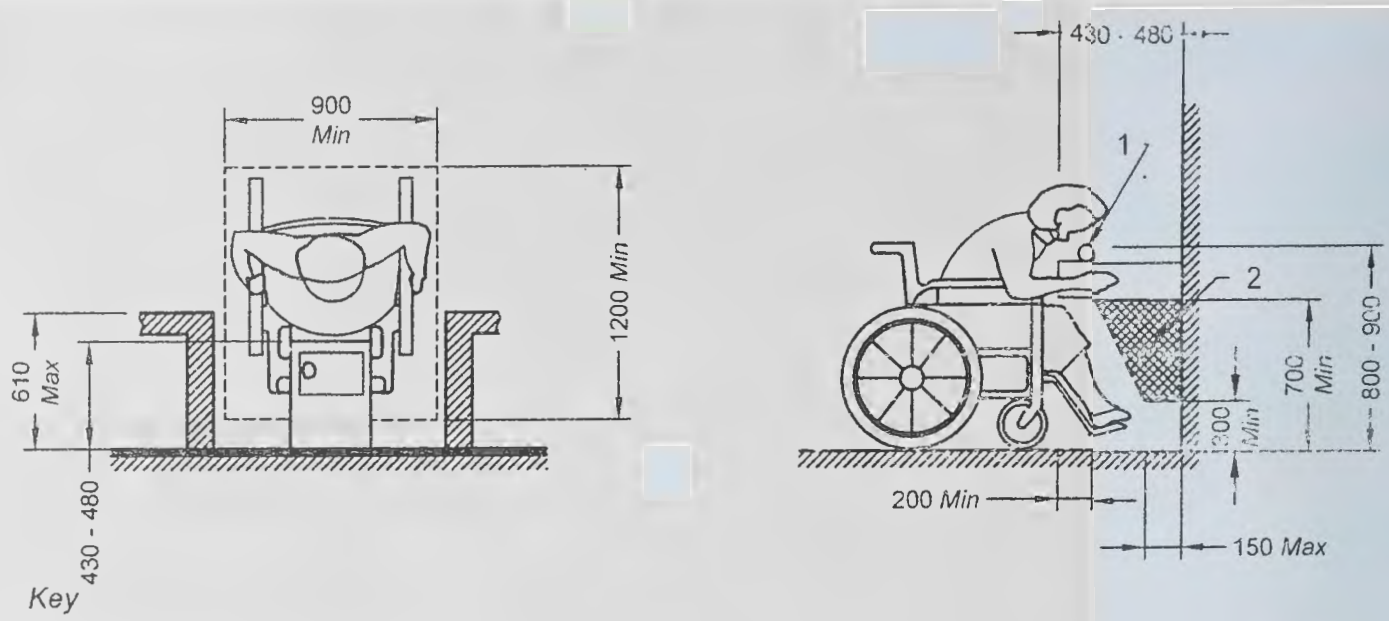

Key
1 Spout
2 Equipment permitted in shaded area

All dimensions in millimetres.

FIG. 70 CLEAR FLOOR SPACE AND KNEE SPACE REQUIREMENT FOR A WALL/POST-MOUNTED DRINKING WATER UNIT

a hazard for persons with visual impairments. The provision of two drinking facilities at different heights is very convenient for standing adults, people in wheelchairs and children. Where only one is provided, it shall be at a height of 700 mm above floor level

4) Controls shall be centrally positioned at the front of the unit or, if at the side, on both sides, not more than 180 mm from the front and shall comply with **B-7**. Control shall be easily operable with one hand with an operative force as given in **B-7**.

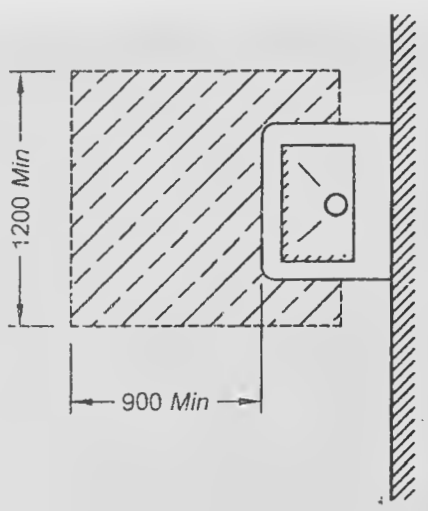

All dimensions in millimetres.

FIG. 71 CLEAR FLOOR SPACE FOR FREESTANDING OR BUILT-IN DRINKING WATER UNIT NOT HAVING CLEAR SPACE UNDER THE UNIT

B-7.12 Dust Bins

Dust bins should be fully accessible and easy to use for everybody.

B-8 SEATING SPACES

B-8.1 General

Seating facilities should be provided in public buildings to provide people with a place to wait and to rest. The location of seats (including reserved areas for wheelchairs) should not disturb the general circulation.

Seating facilities shall have a clear and level floor space of not less than 900 mm × 1 200 mm.

Seats should be designed with armrests to facilitate sitting down and standing up. The seats should also have back rests (*see* Fig. 72).

B-8.2 Seating in Waiting Areas

A range of different types of seating should be provided complying with the following (*see* Fig. 72):

a) Seat height 400 mm to 450 mm,
b) Back support height 750 mm to 790 mm,
c) Seat depth 400 mm to 450 mm,
d) Angle of seat to backrest 100° to 105°,
e) Armrest height 220 mm to 300 mm above seat,
f) Armrest set back from front of seat ≤ 75 mm, and
g) A minimum 150 mm set back under the seat for feet when standing up.

B-8.3 Seating at Desks, Tables, etc

To allow a frontal approach with a wheelchair to a table, desk, counter, telephone, etc, an unobstructed space shall be provided with a minimum free height of 700 mm, minimum free depth of 600 mm (*see* Note) and minimum width of 900 mm to accommodate knees underneath. For footrests, a minimum height of 300 mm is required (*see* Fig. 73).

NOTE — This may overlap the clear floor space by a maximum of 480 mm.

If tables with fixed seats are used, there shall be a place for at least one person in a wheelchair at the table.

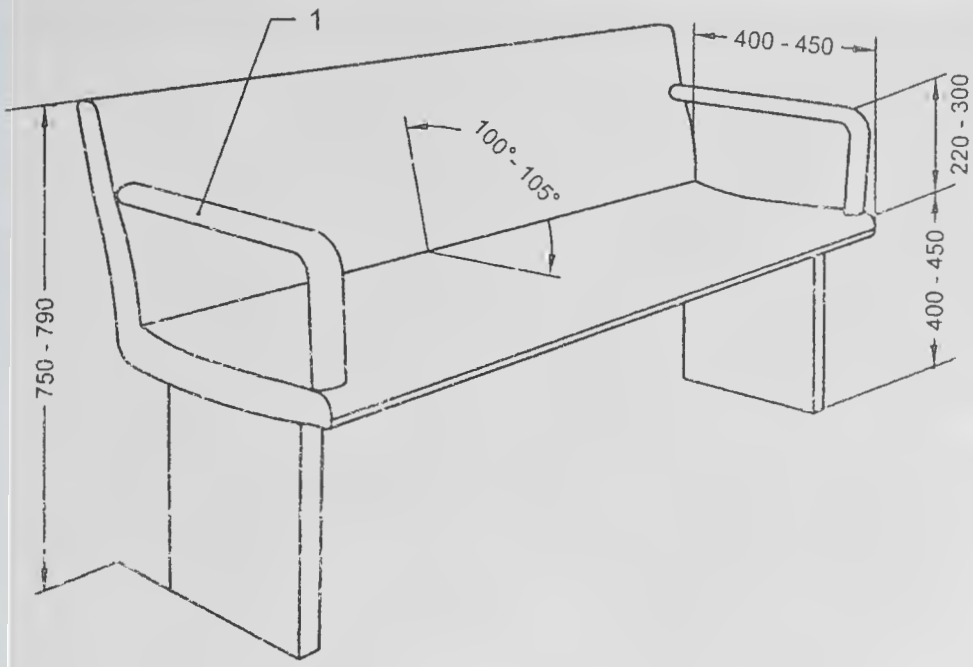

Key

1 Armrests omitted on some benches to allow lateral transfer

All dimensions in millimetres.

FIG. 72 EXAMPLE OF A BENCH WITH ARMRESTS AND BACK SUPPORT

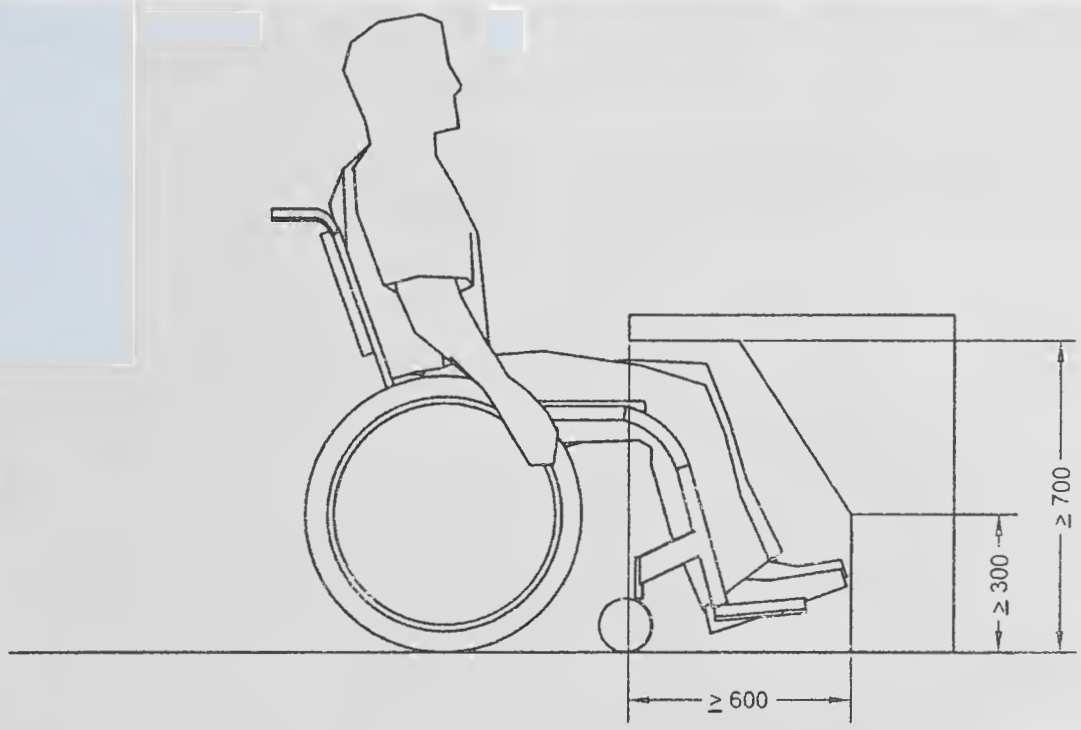

All dimensions in millimetres.

FIG. 73 TABLE AND DESK HEIGHT FOR WHEELCHAIR USERS

B-9 TOILET ROOMS AND SANITARY ROOMS

B-9.1 General

Sanitary facilities shall be designed to accommodate a variety of users. Accessible toilets that can be used by both sexes (unisex accessible toilets) allow the greatest flexibility for people who require assistance hence is the preferred option. Wheelchair accessible unisex toilets should always be provided in addition to wheelchair accessible separate sex toilets. Similarly, a provision of an enlarged cubicle for ambulant disabled people in a separate sex toilet room can also benefit parents with children and people who need an enlarged space (for example those with luggage).

The accessible toilet room shall be located as close as possible to the entrance/reception/waiting area of the building and should be easy to find. It should not be so located that it compromises the privacy of users.

If only one toilet is decided to be provided considering the estimated requirement as per this Code, it shall be Type A unisex accessible toilet (*see* **B-9.2** for types of toilets). Where, more than one accessible toilet is provided, different options exist.

Where sanitary facilities are provided, the following shall also apply:

a) At least one unisex wheelchair user accessible toilet room of Type A, with central placement

of WC, shall be provided, which shall always contain a washbasin.

b) One accessible toilet (Type A or Type B) in single sex toilet block (male and female section of toilet block) shall be provided depending on the footfall and space.

c) When more than one accessible corner toilet of Type B is planned, a choice of layouts suitable for left hand and right hand transfer shall be provided. In case such toilets are located in similar position on each floor of a multi-storey building, it should allow for right and left hand transfer on alternate floors. In any case, a unisex accessible toilet of Type A shall be provided on the ground floor so as to be able to meet the need for both left and right side transfers.

d) In all separate sex toilet/sanitary rooms there shall be provision for one cubicle suitable for use by ambulant disabled.

e) Where urinals are provided, there shall be urinals for wheelchair users and ambulant disabled people.

f) Where there is requirement for only one toilet or sanitary room in a building, a wheelchair accessible unisex toilet of Type A shall be provided but of a greater width to accommodate a standing height washbasin and a urinal.

g) The provision of the accessible toilets shall be such that any wheelchair user/ambulant disabled person doesn't have to travel more than 30 m on the same floor.

h) The design of toilet facilities shall incorporate ease of use for all people and location of fittings should follow a logical sequence.

j) Care shall be taken in placing mirrors and lights to avoid confusion and dazzling for visually impaired users.

k) Soap dispensers and hand towels or driers shall be placed in a convenient and logical position so that they are easy to locate, identify and use.

m) Visual contrast and lighting shall be in accordance with **B-9.16**.

n) An emergency assistance alarm according to **B-9.12**, including a reset control, should be provided in all accessible toilets and sanitary rooms.

p) If facilities are provided such as buttons or taps which operate by use of sensors, accessible signage shall be provided to explain the same.

q) Signage at accessible toilet entrance shall be as per **B-9.18**.

r) Tactile signs should be used beside rather than on doors to indicate 'Ladies' or 'Gents';

s) For the benefit of the persons with vision impairments, all general toilets shall have marked on plates with raised alphabets and braille put on the wall next to the door latch, preferably on the left side. An additional signage shall also be provided on the door at 1 500 mm height. *See also* **B-24** for other requirements of signage.

t) Many persons with visual impairments find it convenient to use the toilets where internal dimensions, accessories and fixtures placement are standardized. A tactile layout of the toilet should be provided on the wall, near the latch side at 900 mm height.

u) A distinct audio sound (beeper/clapper) may be installed above the entrance door for the identification of the toilets by persons with visual impairments.

B-9.2 Wheelchair User Accessible Toilet Rooms

B-9.2.1 This Part gives the characteristics and requirements for the two types of wheelchair user accessible toilet rooms, namely, Type A and Type B.

The clear manoeuvring space of the toilet room shall allow frontal, oblique and lateral transfer. Type A toilet with a central placement of WC allows right and left lateral transfer, and may be more suitable when assistance is needed. Types B only allow one side transfer.

The clear manoeuvring space at floor level in front of the water-closet and the washbasin in case of Type A toilets shall be 1 800 mm × 1 800 mm, except for Type B where it shall be 1 500 mm × 1 500 mm by using the 300 mm space under the washbasin as part of the total manoeuvring space.

The minimum free clearance beside the water-closet shall be 900 mm, whereas 1 200 mm is preferred for lateral transfer and assistance.

NOTE — Minimum clearance of 900 mm accommodates only 65 percent of the wheelchair users, clearance of 1 200 mm accommodates 90 percent of all wheelchair users especially also those who use powered wheelchairs.

The minimum dimensions for a Type A accessible toilet room are 2 200 mm width and 2 300 mm depth, and the minimum dimensions for a Type B accessible toilet room are 1 700 mm width and 2 200 mm depth.

NOTE — In case of existing buildings, as part of exceptional considerations. the measures given above cannot be achieved due to technical reasons, the manoeuvring space at floor level may be reduced, but it should be recognized that such a reduction limits the number of people who can use these toilet rooms.

B-9.2.2 *Type A Toilet Room with Lateral Transfer from Both Sides*

B-9.2.2.1 Type A accessible toilet room has the following characteristics (*see* Fig. 74 and Fig. 75):

a) Lateral transfer from both sides,

b) Manoeuvring space uninterrupted by washbasin and pan,

c) Independent water supply beside water-closet,

d) Horizontal grab rails at both sides, and

e) Toilet paper dispensers on both folding grab rails.

B-9.2.2.2 Type A accessible toilet room shall meet the following requirements (*see* Fig. 74):

a) It shall have minimum internal dimensions 2 200 mm × 2 300 mm.

b) The layout of the fixtures in the toilet shall be such that there is a clear manoeuvring space that provides a wheelchair turning radius of 1 800 mm in front of the water-closet and washbasin in the accessible toilet unit.

c) It shall have all fixtures and utilities arranged in a manner to provide a clear space of 900 mm × 1 350 mm for wheelchair users to access them.

d) It shall have clear space of not less than 900 mm wide next to the water-closet.

e) It shall be equipped with a door complying with **B-9.4**.

f) It shall have a water-closet complying with **B-9.5**, grab bars complying with **B-9.6** and washbasin complying with **B-9.7**.

g) It shall have essential washroom accessories complying with **B-9.8**.

h) It shall have an alarm to seek emergency help, complying with **B-9.12.**

j) It shall have the toilet roll dispenser and hand water faucet mounted below the grab bars and at not more than 300 mm from the front edge of the seat and at a height between 50 mm and 200 mm from the top of the water-closet seat.

k) Cloth hooks should be set at different heights, 900 mm to 1 100 mm, and additionally at least one hook at 1 400 mm; and projecting not more than 40 mm from the wall.

m) Where possible, be equipped with a shelf of dimensions 400 mm × 200 mm fixed at a height of between 900 mm and 1 000 mm from the floor.

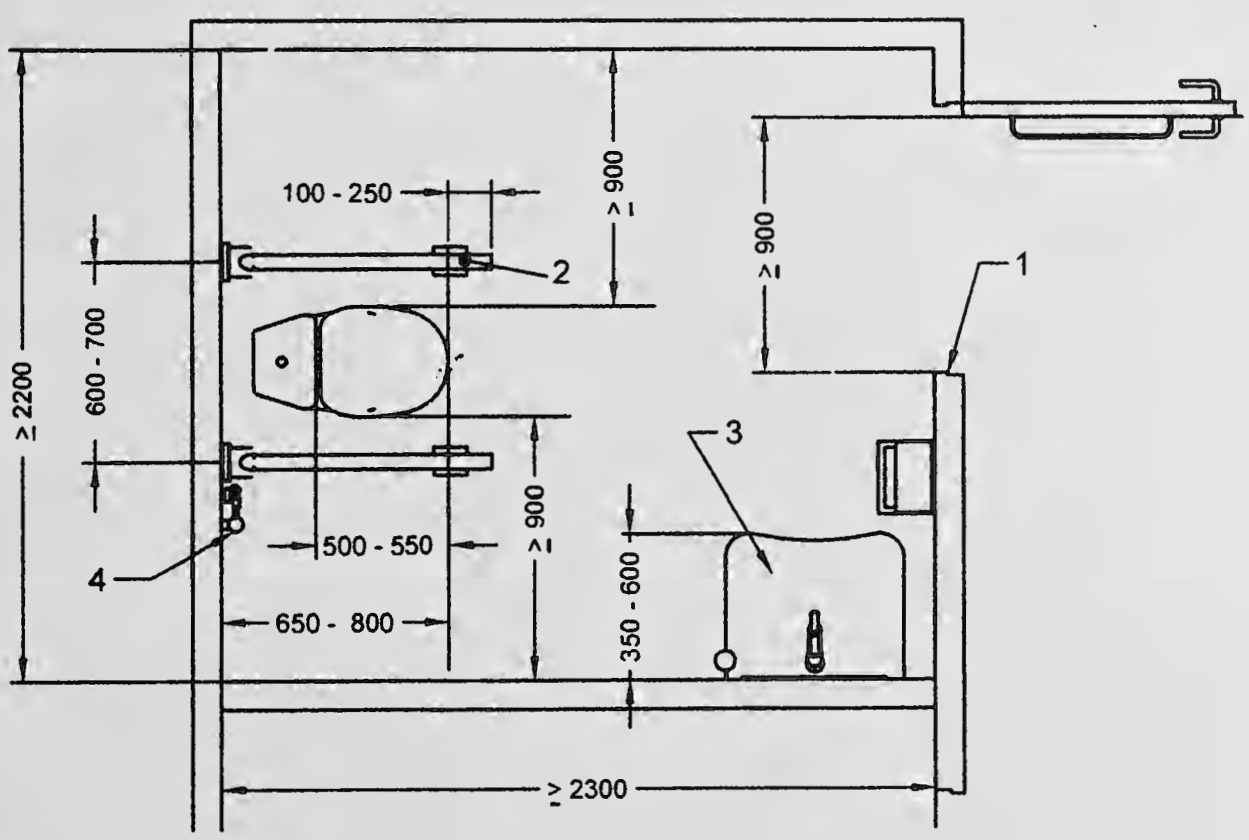

Key

1 Minimum 900 mm

2 Foldable grab bars, both sides

3 Washbasin

4 Independent water supply

All dimensions in millimetres.

FIG. 74 EXAMPLE OF TYPE A TOILET ROOM — LATERAL TRANSFER FROM BOTH SIDES

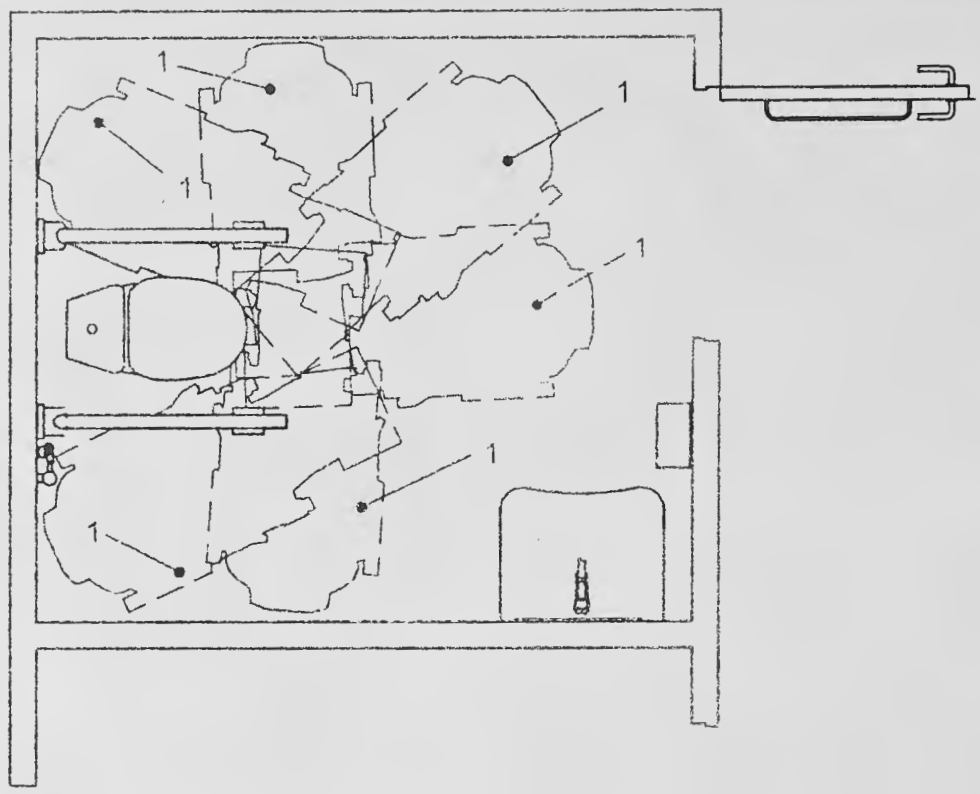

Key
1 Possible transfer positions

FIG. 75 TYPE A TOILET ROOM TRANSFER OPTIONS

B-9.2.3 *Type B Toilet Room with Lateral Transfer from One Side Only*

B-9.2.3.1 Type B toilet has the following characteristics (*see* Fig. 76 and Fig. 77):

a) Lateral transfer only from one side;
b) Manoeuvring space reduced by washbasin;
c) Independent water supply beside water-closet, with floor drain where necessary;
d) Ability to reach small wash hand basin when seated on toilet;
e) Horizontal grab rail on wall beside the water-closet;
f) Vertical grab rail on wall beside the water-closet for getting up and sitting down (slanted grab bars are not preferred);
g) Foldable grab rail; and
h) Toilet paper dispenser fixed on the wall beside the water-closet.

B-9.2.3.2 Type B accessible toilet room shall meet the following requirements (*see* Fig. 76):

a) It shall have minimum internal dimensions of 1 700 mm × 2 200 mm.
b) It shall have all fixtures and utilities arranged in a manner to provide a clear space of 900 mm × 1 350 mm for wheelchair users to access them
c) It shall have clear space of not less than 900 mm wide next to the water-closet.
d) It shall be equipped with a door complying with **B-9.4**.
e) It shall have a water-closet complying with **B-9.5**, grab bars complying with **B-9.6** and washbasin complying with **B-9.7**.
f) It shall have essential washroom accessories complying with **B-9.8**.
g) It shall have an alarm to seek emergency help, complying with **B-9.12**.
h) It shall have the toilet roll dispenser and hand water faucet mounted below the grab bars and at not more than 300 mm from the front edge of the seat and at a height between 50 mm and 200 mm from the top of the water-closet seat.
j) Cloth hooks should be set at different heights, 900 mm to 1 100 mm, and additionally at least one hook at 1 400 mm; and projecting not more than 40 mm from the wall.
k) Where possible, be equipped with a shelf of dimensions 400 mm × 200 mm fixed at a height of between 900 mm and 1 000 mm from the floor.

B-9.3 WC Compartments for Ambulant Disabled People

These compartments meet the needs of ambulant disabled people who require support (*see* Fig. 78 and Fig. 79).

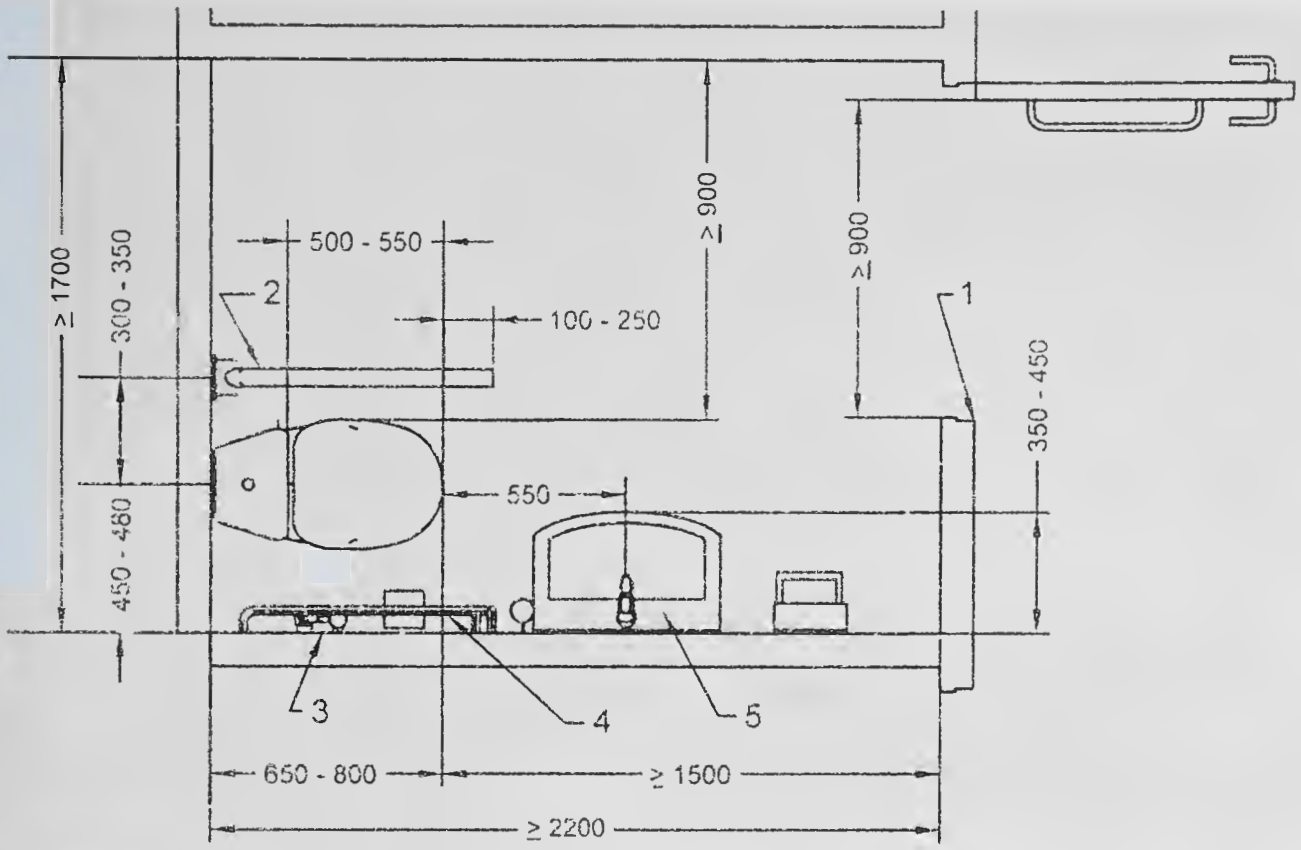

Key

1 Minimum 900 mm
2 Foldable grab bar
3 Independent water supply
4 Grab bar on wall
5 Washbasin

All dimensions in millimetres.

FIG. 76 EXAMPLE OF TYPE B CORNER TOILET ROOM — LATERAL TRANSFER FROM ONE SIDE ONLY

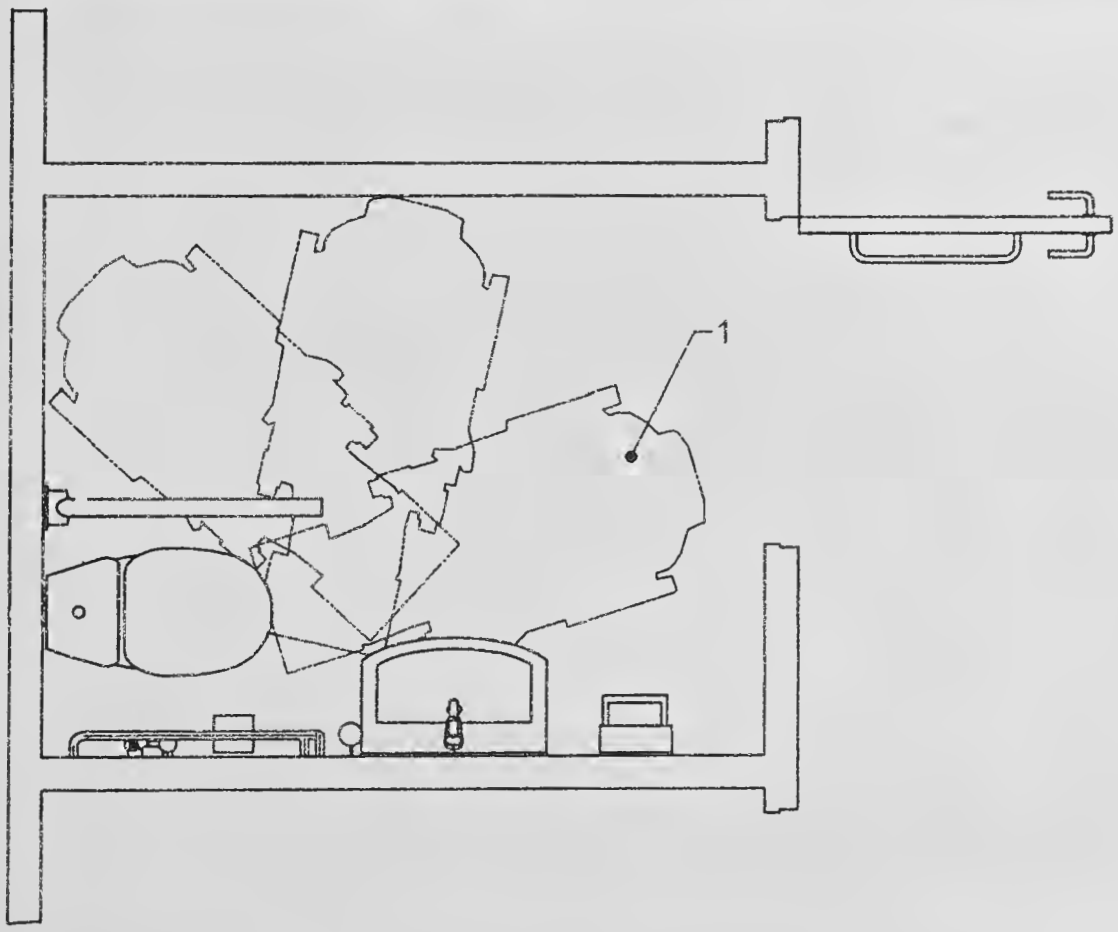

Key

1 Possible transfer positions

FIG. 77 TYPE B TOILET ROOM TRANSFER OPTIONS

This type of compartment is not for the majority of people who use wheelchairs. When located in a single-sex washroom, hand washing facilities will be available communally. Where this is a standalone facility, hand washing facilities shall be provided either in a space adjacent to the WC compartment or in a compartment suitably enlarged to accommodate a wash hand basin.

Such WC compartments shall meet the following requirements:

a) It shall have a clear manoeuvring space of minimum 900 mm × 900 mm in front of the toilet.

b) It shall be equipped with a door complying with **B-9.4** and opening outwards.

c) Water-closet shall comply with **B-9.5**.

d) Grab rails complying with **B-9.6**, horizontal and vertical shall be provided on both sides of toilet.

e) It shall have other toilet accessories and fittings complying with **B-9.8**.

f) It shall have independent water supply beside water-closet, preferably a hand held toilet spray and floor drain, where necessary (*see* **B-9.9**).

B-9.4 Toilet or Sanitary Room Doors

Toilet or sanitary room doors shall comply with **B-5.3**. The toilet door shall either be an outward opening door or two way opening door or a sliding type and shall provide an unobstructed and clear opening width of at least 900 mm; it shall be easy to open and close. There should be no openings under or above the door that compromises on privacy. Doors should be positioned so as not to constitute a hazard.

The toilet door shall be provided with a horizontal pull-bar, at least 600 mm long, on the inside of the door, located so that it is 130 mm from the hinged side of the door and at a height of 900 mm to 1 000 mm. A horizontal pull handle on the inside of the outward opening doors shall be provided at a height of 700 mm above the floor. The door shall be capable of being locked from the inside by a device that is operable by one hand, activated by a force not more than 22 N and which does not require fine finger control, tight grasping, pinching or twisting of the wrist.

B-9.5 Water-Closet

Water-closet shall comply with the following requirements:

a) It shall be so located that the distance between centreline of the water-closet to the adjacent wall in case of corner toilets (Type B) be between 450 mm and 480 mm. The minimum distance of a corner toilet from the edge of the WC seat to the adjacent wall should be 250 mm. In case of Type A toilet, the distance from the edge of the WC seat to the adjacent wall shall be 900 mm, minimum on both sides to allow ease of transfer.

b) The top of the water-closet shall be between 450 mm and 480 mm from the floor.

c) The minimum distance from the front edge of the water-closet to the rear wall should be between 650 mm and 800 mm.

d) There shall be an adequate clear floor space of at least 1 300 mm depth and 900 mm width, both in front and on the transfer side, adjacent to the water-closet.

e) There shall be a suitable back support to reduce the chance of imbalance or injury

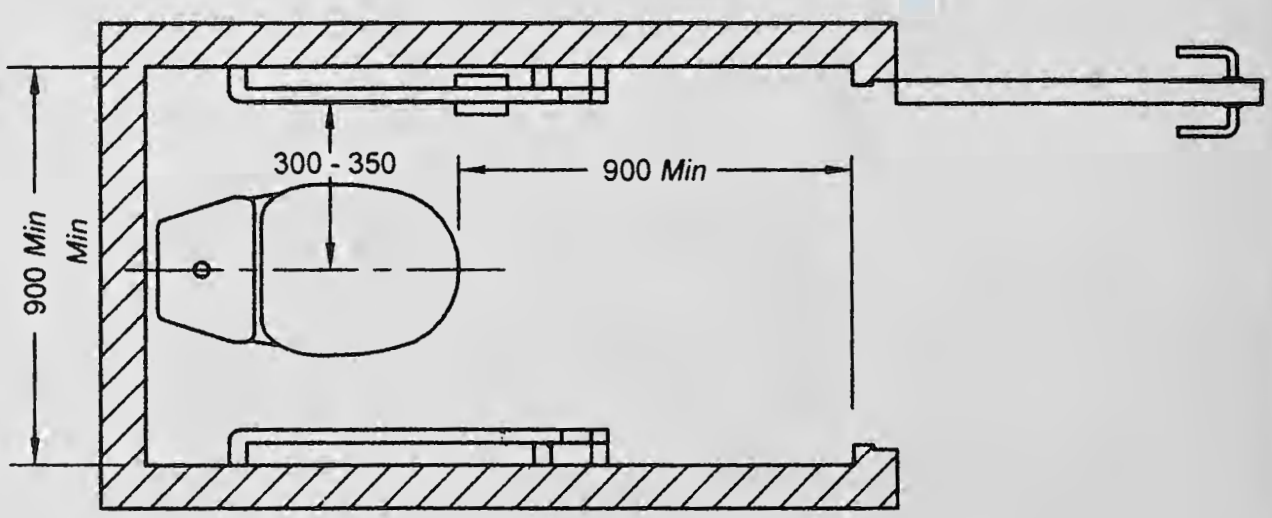

All dimensions in millimetres.

FIG. 78 TOILET FOR AMBULANT DISABLED WITH L-SHAPED GRAB BAR

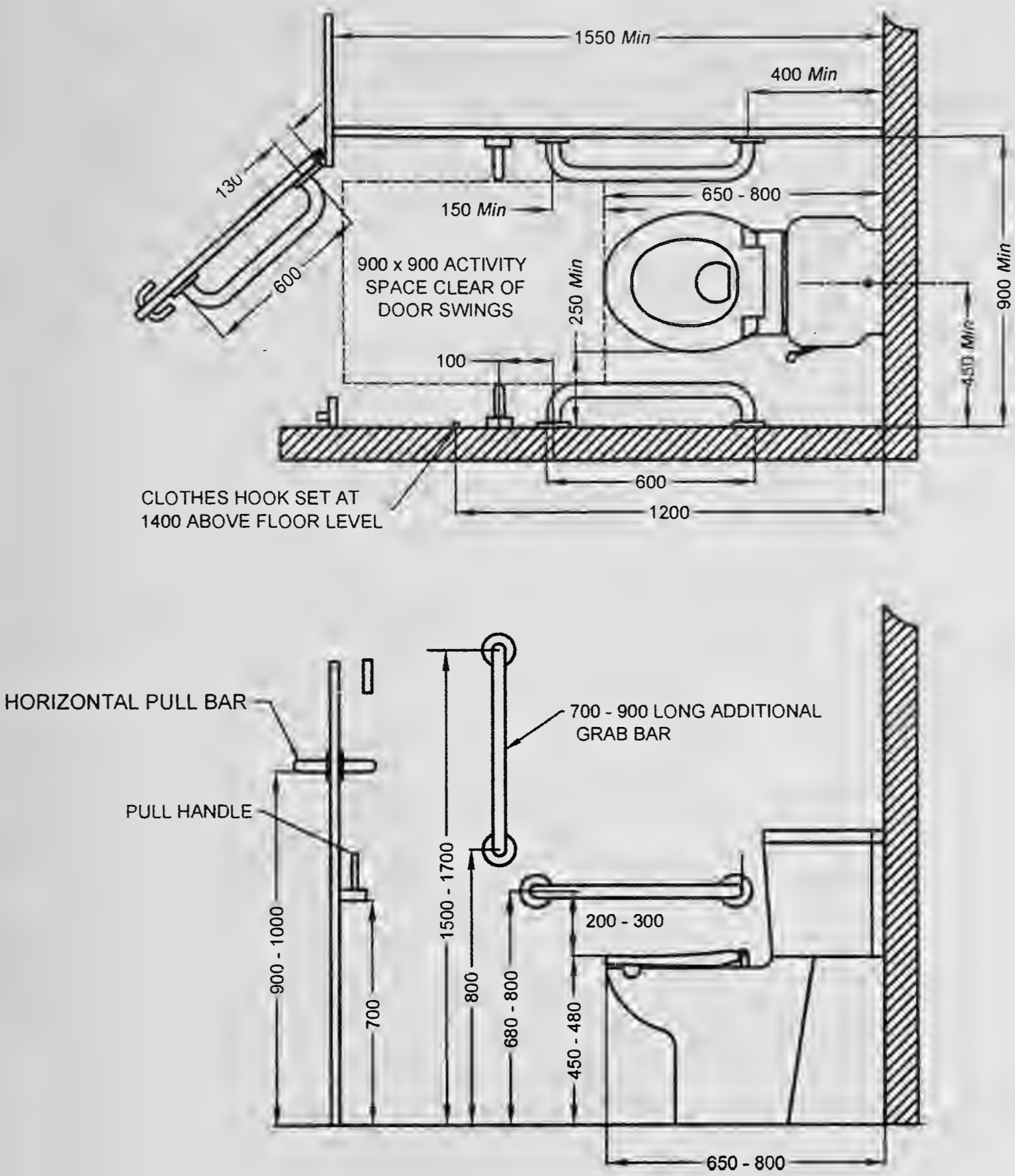

All dimensions in millimetres.

FIG. 79 PLACEMENT OF FIXTURES IN TOILET FOR AMBULANT DISABLED

caused by leaning against exposed valves or pipes. The distance from the seat to the backrest should range between 500 mm and 550 mm.

f) The water-closet shall preferably be of wall-hung or corbel type as it provides additional space at the toe level.

g) Where water cistern is used, the cover shall be securely attached and the flush control shall either be lever type or automatic, and located on the transfer side of the water-closet. The flush control shall not be located more than 1 000 mm from the floor.

h) Toilets for children should have a distance from the centre line to the adjacent wall between 305 mm and 380 mm and the water-closet height shall be between 205 mm and 380 mm.

B-9.6 Grab Bars

Grab bars complying with **B-5.5.3** shall be provided in toilet or sanitary rooms in accordance with this clause.

On both sides of a toilet, a grab bar (whether drop-down or fixed to the wall) shall be provided at a distance between 300 mm and 350 mm from the centre line of the toilet.

On the sides where a lateral transfer is possible, a foldable grab bar (drop-down support bar) shall be provided at a height of 200 mm to 300 mm above the water-closet. The length of the foldable grab bar should overlap the front edge of the water-closet in between 100 mm and 250 mm. The positioning of a foldable grab bar should allow access from a wheelchair when folded up.

Where a wall is beside the toilet, a horizontal grab bar shall be provided at a height of 200 mm to 300 mm above the water-closet, and a vertical grab bar shall exceed from the horizontal grab bar to a height of 1 500 1 700 mm above floor level. The grab bar shall extend a distance of minimum 150 mm to the front edge of the water-closet.

Alternatively, one L-shape grab bar, 600 mm long horizontal and 700-900 mm long vertical shall be mounted on the side wall closest to the water-closet, as illustrated in Fig. 80.

The horizontal grab bar shall be uninterrupted for its full length.

The positioning of accessories such as hand towel, soap, waste bin, etc, should not hamper the use of the grab bar.

The grab bar height for toilets for children should be between 510 mm and 535 mm.

B-9.7 Washbasin

A washbasin complying with following requirements shall be provided within an accessible toilet room (*see* Fig. 81):

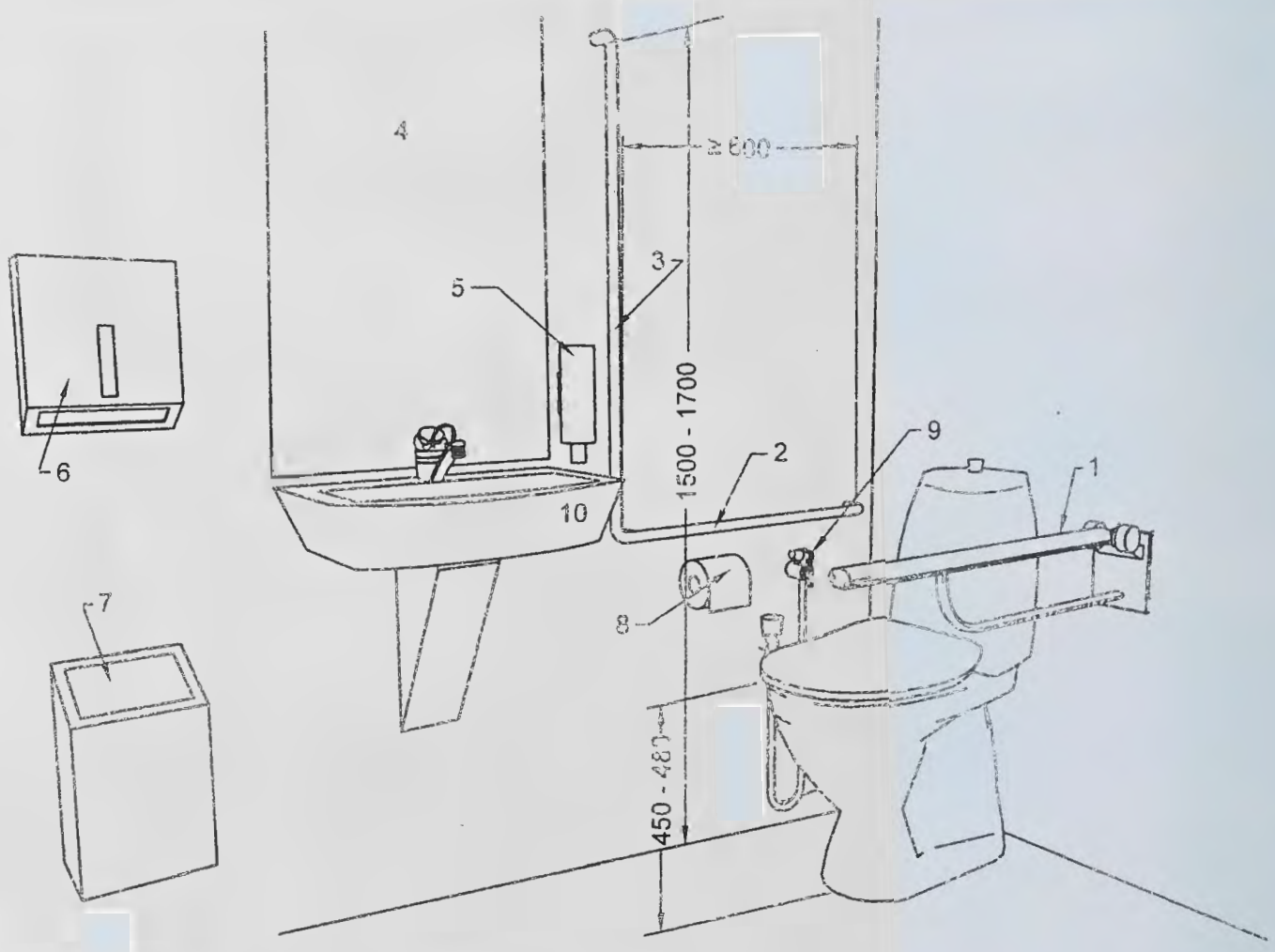

Key

1 Drop down support grab bar at seat height plus 200 to 300 mm
2 Wall mounted horizontal grab bar at seat height plus 200 to 300 mm
3 Wall mounted vertical grab bar
4 Mirror, top height minimum 900 mm, bottom height maximum 900 mm above floor
5 Soap dispenser 800 to 1 000 mm above floor
6 Towels or dryer 800 to 1 100 mm above floor
7 Waste bin
8 Toilet paper dispenser 600 to 700 mm above floor
9 Independent water supply
10 Small finger rinse basin 350 mm maximum projection

All dimensions in millimetres.

FIG. 80 POSITIONING OF GRAB BARS, WATER SUPPLY AND OTHER TOILET ACCESSORIES IN TYPE B CORNER TOILET

a) The positioning of a washbasin should allow access from a wheelchair. It shall provide a minimum clear floor space of 900 mm wide by 1 200 mm deep, of which a maximum of 480 mm in depth may be under the washbasin.

b) It shall be mounted such that the minimum distance between the centreline of the fixture and the side wall is 460 mm; and the top edge of the washbasin is between 750 mm and 850 mm from the floor.

c) The differences in stature may require lower or higher heights of washbasins and it may be advisable to have an inbuilt flexibility to increase or decrease height.

d) The space under the washbasin shall be unobstructed with a knee clearance centred on the washbasin between 680 mm and 700 mm high, and 200 mm deep. In addition, a toe clearance of at least 300 mm high shall be provided (*see* Fig. 82). The front edge of the washbasin shall be located within a distance of 350 mm to 600 mm from the wall, according to Fig. 74.

e) The hot water and drain pipes within the knee space or toe space shall be properly insulated.

f) Automatic or lever type faucets/taps shall be provided complying with B-9.10.

g) In front of the washbasin, space should allow for a frontal or oblique approach by a wheelchair. The reaching distance to the tap control shall be a maximum of 300 mm, according to Fig. 82.

h) Edges on washbasins should be rounded.

j) The mirror above the washbasin shall be positioned to have the bottom edge at a height of not more than 900 mm above the floor, up to a height of 1 900 mm (*see* Fig. 81). If a second mirror is provided, the maximum height above the floor should be 600 mm, up to 1 850 mm. The mirror shall be tilted at an angle of 30° for better visibility of wheelchair user. Care shall be taken in placing mirrors and lights to avoid confusion and dazzling for visually impaired users.

k) A shelf with minimum dimensions of 200 mm × 400 mm should be provided near the washbasin at a height of 850 mm, or combined with the washbasin.

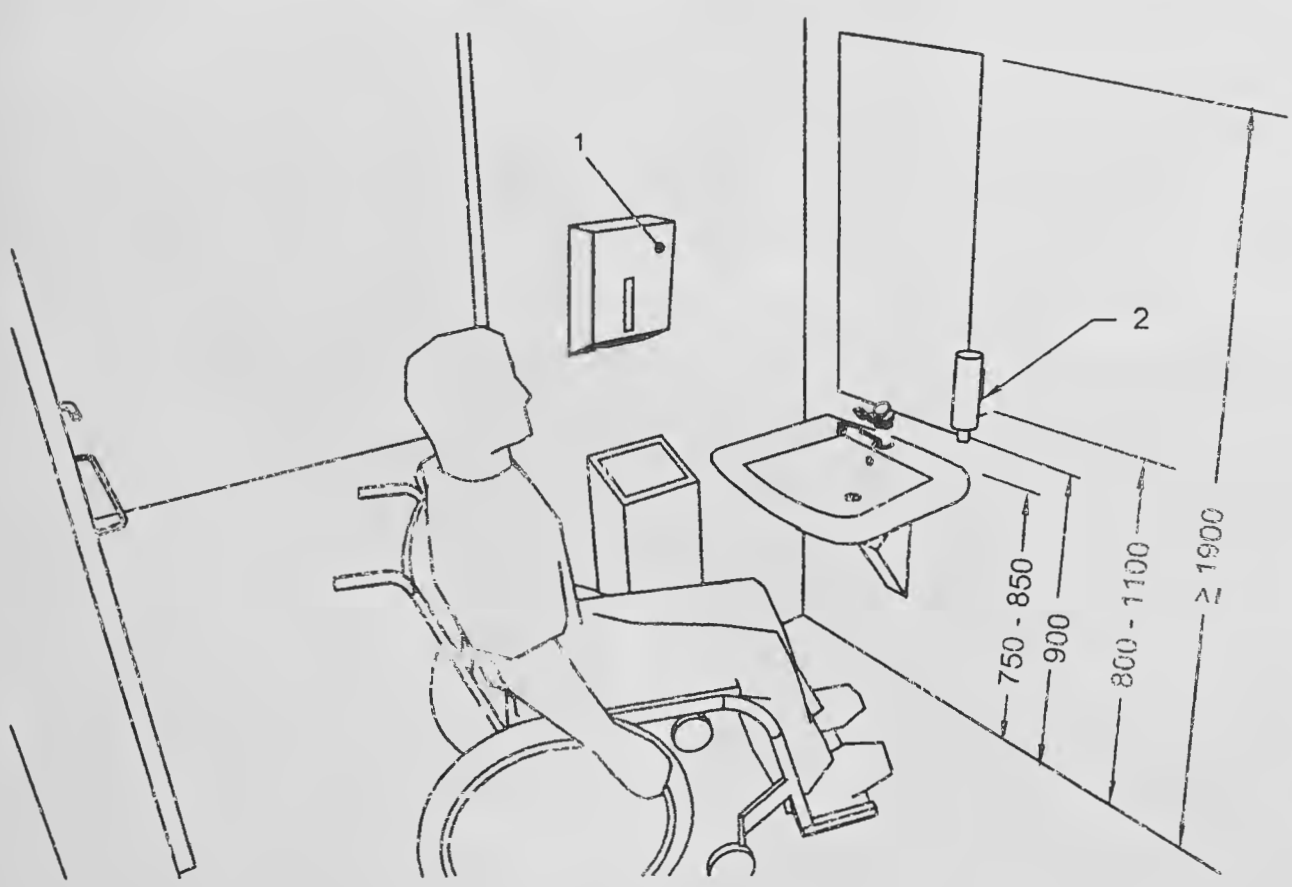

Key

1 Paper towels, 800 to 1 100 above floor

2 Soap dispenser

All dimensions in millimetres.

FIG. 81 PLACEMENT OF WASHBASIN AND MIRROR ABOVE THE WASHBASIN WITH DISTANCE OF SANITARY APPLIANCES

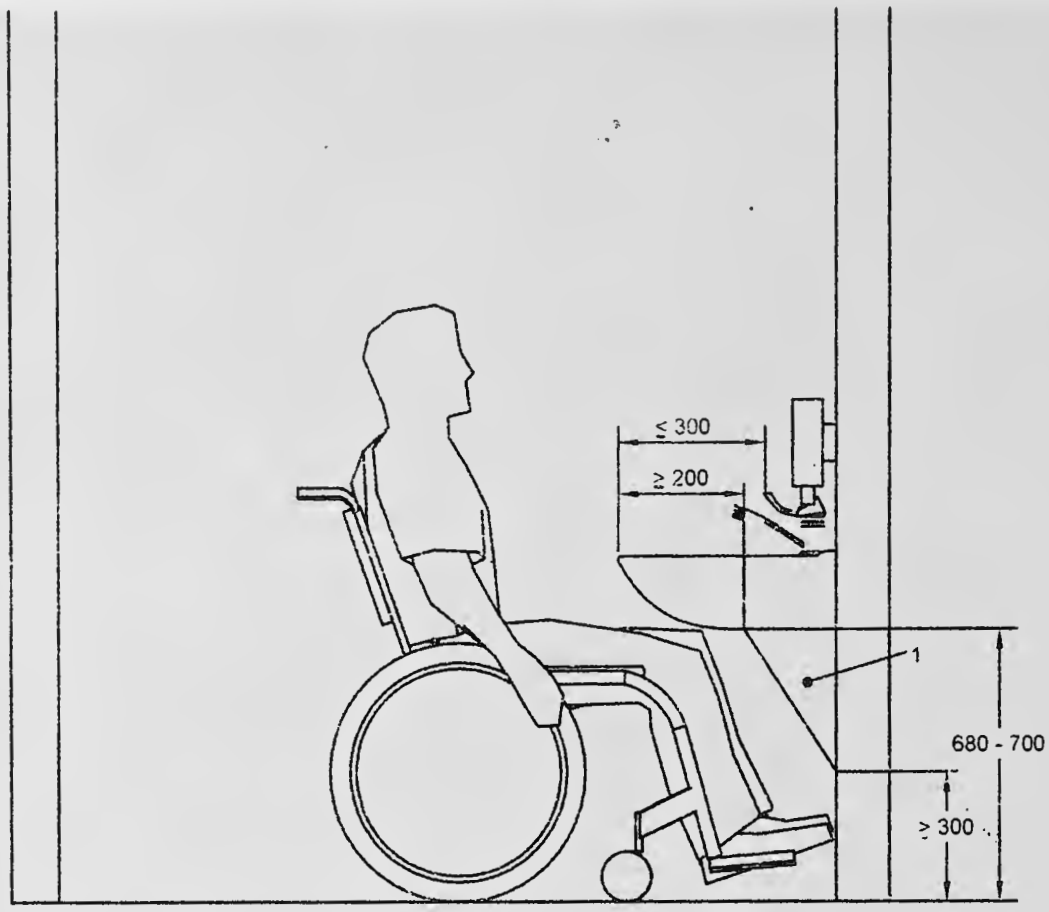

Key

1 Concealed piping

All dimensions in millimetres.

FIG. 82 WASHBASIN WITH KNEE/TOE CLEARANCE

B-9.8 Other Toilet Accessories and Fittings

All other fittings, for example the water tank, hand dryer, towel, soap dispensers, waste bins, hand-held shower, etc. should be set at a height between 800 mm and 1 100 mm from the floor (*see* Fig. 80). Coat hooks should be set at different heights, 900 mm to 1 100 mm, and additionally at least one hook at 1 400 mm. Accessories shall be placed in close proximity to the basin, to avoid a person with wet hands wheeling a chair.

Dispensers for toilet paper shall be reachable from the water-closet, either under the grab bar or on the side-wall of a corner toilet at a height between 600 mm and 700 mm from the floor (*see* Fig. 80).

Light switches should be fixed inside all accessible toilet cubicles or the lighting should automatically switch on when someone enters the room. Timed light switches should not be installed or used.

Needle boxes to safely dispose of needles (for example from diabetes patients) should be provided.

If a sanitary bin is supplied, it should be reachable from the water-closet. Sanitary bins with non-touch opening devices are preferred.

Non-touch soap dispensers are preferred.

B-9.9 Water Supply

An independent water supply (hand-held shower) shall be provided next to the toilet. An alternative such as a combination bidet and rear side pan/built-in bidet can be installed.

B-9.10 Taps

Taps should be mixer, lever or sensor operated to aid operation, complying with requirements given in **B-7**. The tap controls should be set no more than 300 mm from the front of the washbasin. It is recommended that a thermostat be installed to limit the temperature of the hot water to a maximum of 40°C in order to prevent scalding. Hot and cold water taps should be identifiable by both colour and tactile markings.

B-9.11 Urinals

Wheelchair users may be able to pull themselves to a standing position to use a urinal, or they may be able to use a urinal from their wheelchair. Ambulant persons with disabilities, for example crutch users, may need support in front of urinals. Bowl urinals are preferable to slab urinals for the benefit of visually impaired.

When wall hung urinals are fitted in the washroom, it is recommended that at least one of these have its rim set at a height of 380 mm for wheelchair users and at least one have its rim set at a height of 500 mm for standing users/ambulant disabled. When installed, both should be equipped with a vertical grab rail. Urinals shall be minimum 360 mm deep measured from the outer face of the urinal rim to the back of the fixture.

The lower urinal position as shown in Fig. 83 is also beneficial to a person of lower stature. Where an

accessible urinal is provided, the accessible approach to the same shall be ensured. This wall hung urinal should be set clear above the floor level, without any raised access platform and with a clear floor area in front of the urinal of at least 760 mm wide and 1 220 mm deep to allow forward approach for ambulant disabled and minimum of 900 mm × 1 350 mm for wheelchair users to use the urinals (*see* Fig. 84). Urinals should contrast visually with the wall to which they are attached.

B-9.12 Alarm

An assistance alarm, which can be reached from changing or shower seats, from the WC and by a person lying on the floor, shall be provided in all accessible toilets and accessible sanitary rooms. This alarm should

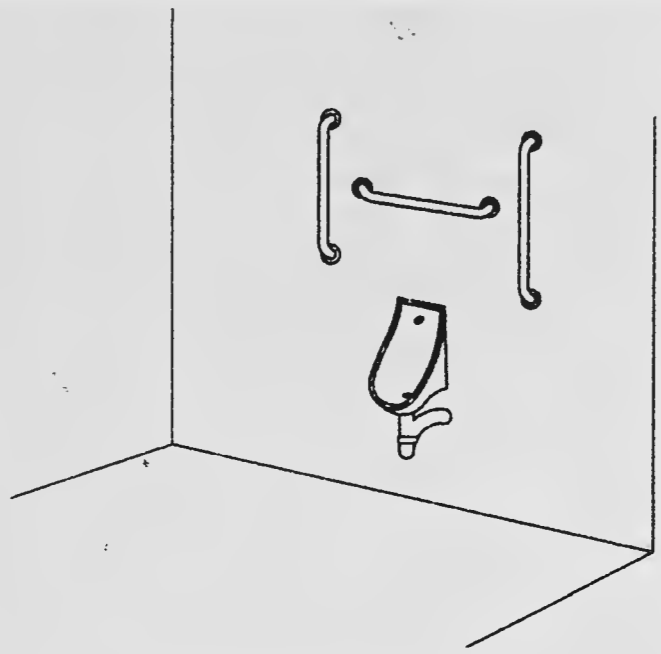

FIG. 83 URINAL FOR WHEELCHAIR USERS

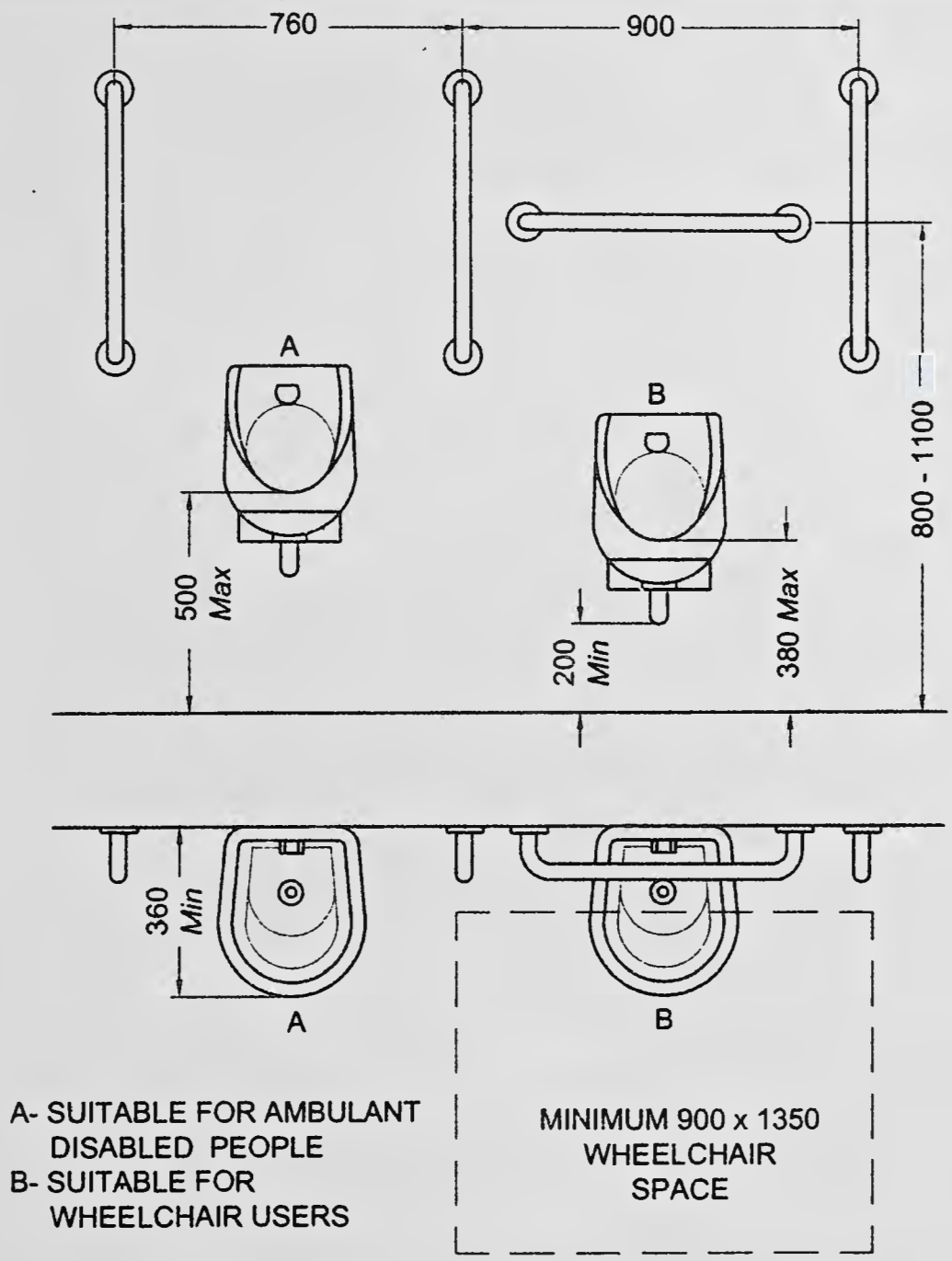

NOTE — Urinals shall be minimum 360 mm deep measured from the outer face of the urinal rim to the back of the fixture. Space below the urinal set for wheelchair users should be kept free of pipework up to a height of 200 mm above floor and up to a depth of 360 mm from the outer face of the urinal rim.

All dimensions in millimetres.

FIG. 84 CLEAR FLOOR SPACE AND MOUNTING HEIGHTS FOR URINALS

be connected to an emergency help point, or where a member of staff can assist.

Visual and audible feedback should be provided to indicate that, when the alarm has been operated, the emergency assistance call has been acknowledged and action has been taken.

It should take the form of a pull cord, coloured red, with two red bangles of 50 mm diameter, one set at a height between 800 mm and 1 100 mm and the other set at 100 mm above floor level.

A reset control shall be provided for use if the alarm is activated by mistake. It shall be reachable from a wheelchair and, where relevant, from the WC, the tip-up seat in a shower or changing facility, or the bed in an accessible bedroom. The reset control shall be easy to operate and located with its bottom edge between 800 mm and 1 100 mm above floor level.

For a corner toilet room, the reset button should be above the fixed horizontal grab rail beside the toilet paper holder.

The marking of the reset control shall be both visible and tactile.

B-9.13 Emergency Warning Alarm

A visual emergency alarm shall be provided to alert people who are deaf or hard of hearing in the event of an emergency.

B-9.14 Shower and Changing Rooms

Showers and changing rooms can be used by people with different disabilities and different supporting aids, for instance, wheelchair users, ambulant disabled people, etc, using their own wheelchairs or special shower chairs.

B-9.14.1 *Shower/Changing Room Size and Space*

The shower/change area shall have level entry and have no fixed elements that prevent front and side access.

A self-contained individual shower room or changing room shall have minimum interior dimensions of 2 000 mm × 2 200 mm (*see* Fig. 85 and Fig. 86). *See* **B-9.14.6** for other requirements of individual shower room.

A shower room incorporating a corner accessible toilet room shall have minimum interior dimensions of 2 400 mm × 2 500 mm (*see* Fig. 87). In such cases, the manoeuvring areas may overlap, as shown in Fig. 87.

The minimum clear floor space or wet showering area should be 900 mm × 1 350 mm, with a transfer area of also 900 mm × 1 350 mm in the shower room (*see* Fig. 88).

If two or more shower recesses are provided, at least one shall have the seat on the opposite side.

B-9.14.2 *Shower Floor and Drainage*

The floor in the shower recess shall have a gradient between 1:50 and 1:60 sloping to a floor drain. The area outside the shower recess shall have a gradient between 1:70 and 1:80 draining towards the shower recess.

The floor of the shower shall be slip-resistant even when wet.

The transition into the shower recess shall be level without a step down or a kerb. Where unavoidable the kerb shall not be more than 12 mm high bevelled at a slope of 1:2.

The waste outlet should be centrally located and be a round type outlet, not a channel type, to ensure the stability of the shower chair.

B-9.14.3 *Shower Seat*

The shower should be fitted with a wall mounted, easily operable foldable seat that folds in an upward direction. If a foldable seat is provided, its minimum size shall be 450 mm × 450 mm, and, when folded down, have its top surface set between 450 mm and 480 mm above finished floor and spaced a maximum of 45-50 mm from the rear wall.

The shower seat shall be positioned such that the distance between the centerline of the shower seat and the adjacent wall is 450 mm to 480 mm, and the distance between front edge of the shower seat and the rear wall is 650 mm.

Enclosures for the shower cubicle shall not obstruct transfer from wheelchair onto shower seat.

The fastenings for grab bars and the construction of the foldable seat shall be able to withstand a force of 1.1 kN applied at any position and in any direction.

NOTE — Shower wheelchairs are sometimes used instead of shower seats.

The foldable seat shall have the following features:

a) Self-draining;
b) Slip-resistant and stable;
c) Foldable in an upwards direction; when folded, it shall not present a hazard and the grab rail shall be accessible from the foldable seat;
d) Rounded front corners (radius 10 mm to 15 mm); and
e) Rounded top edges (minimum radius of 2 mm to 3 mm).

The foldable seat should preferably be height adjustable.

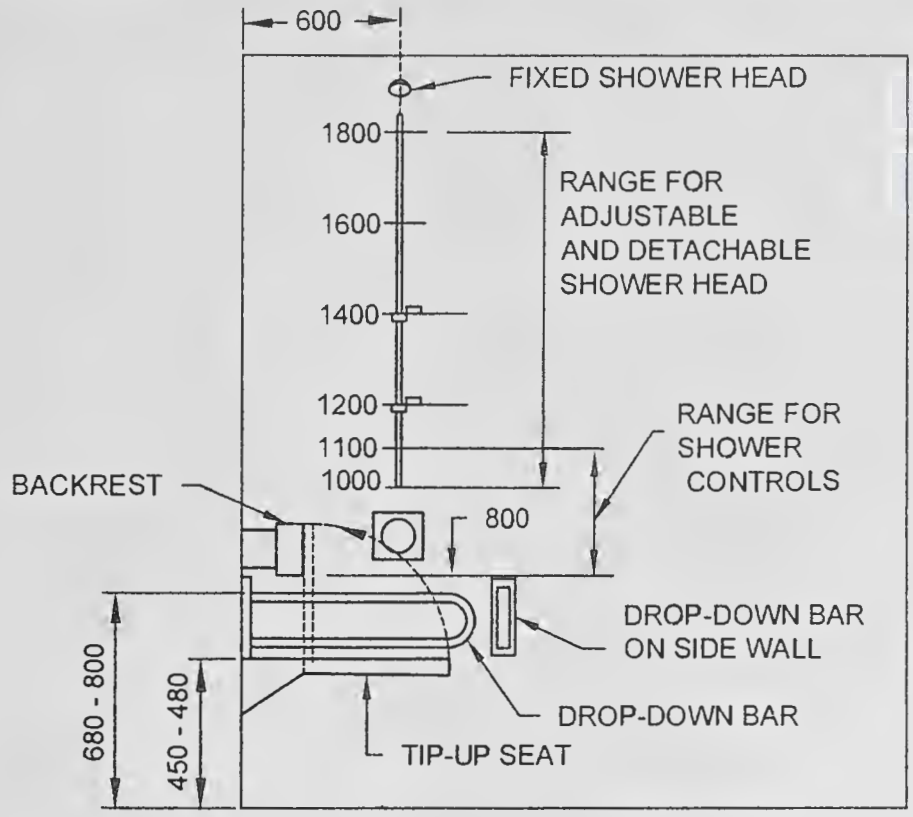

ELEVATION

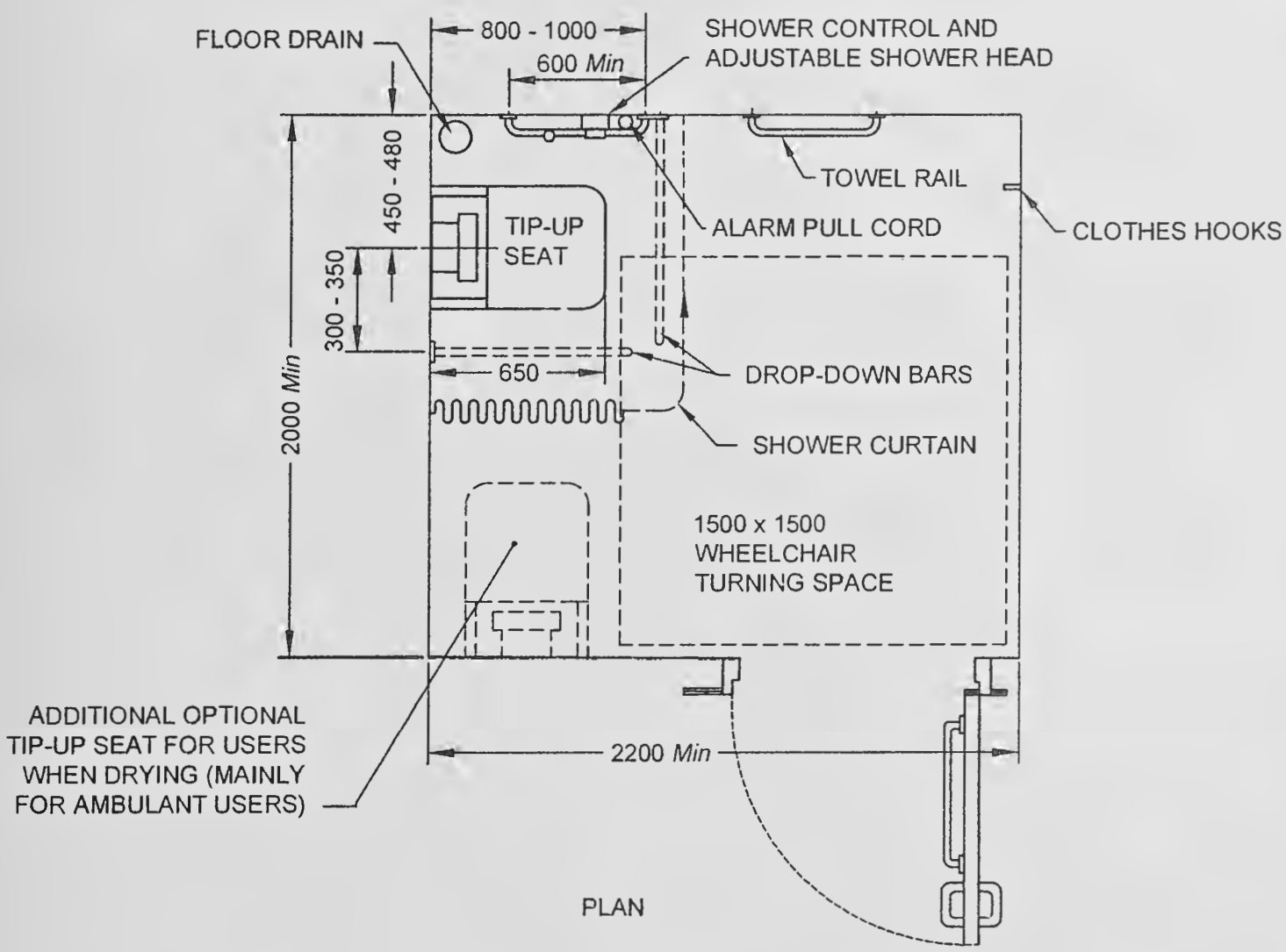

PLAN

NOTE — Alarm pull cord, horizontal and vertical grab bars, shower curtain bar and towel rail not shown in elevation for clarity.

All dimensions in millimetres.

FIG. 85 SELF-CONTAINED SHOWER ROOM FOR INDIVIDUAL USE

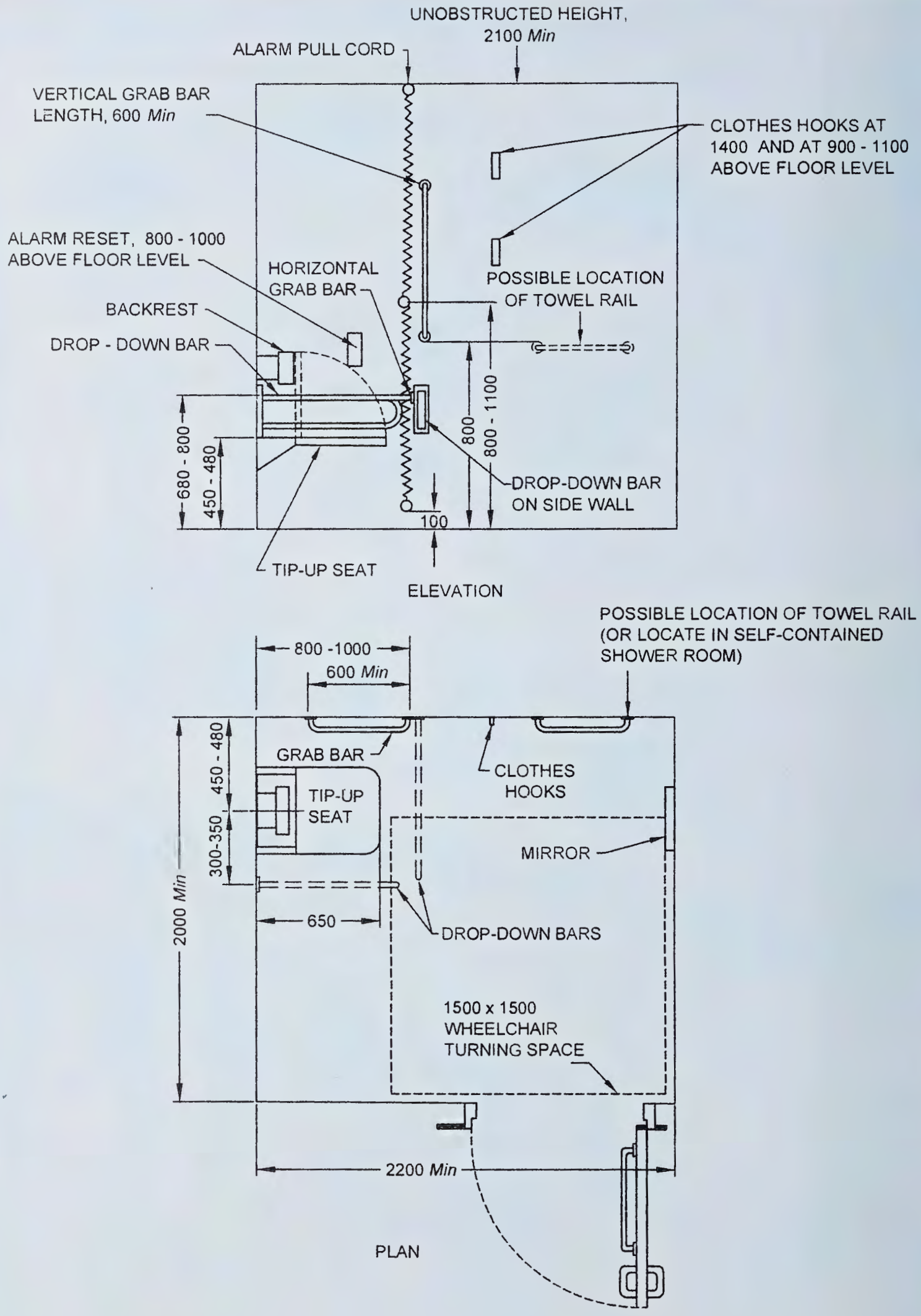

All dimensions in millimetres.

FIG. 86 SELF-CONTAINED CHANGING ROOM FOR INDIVIDUAL USE

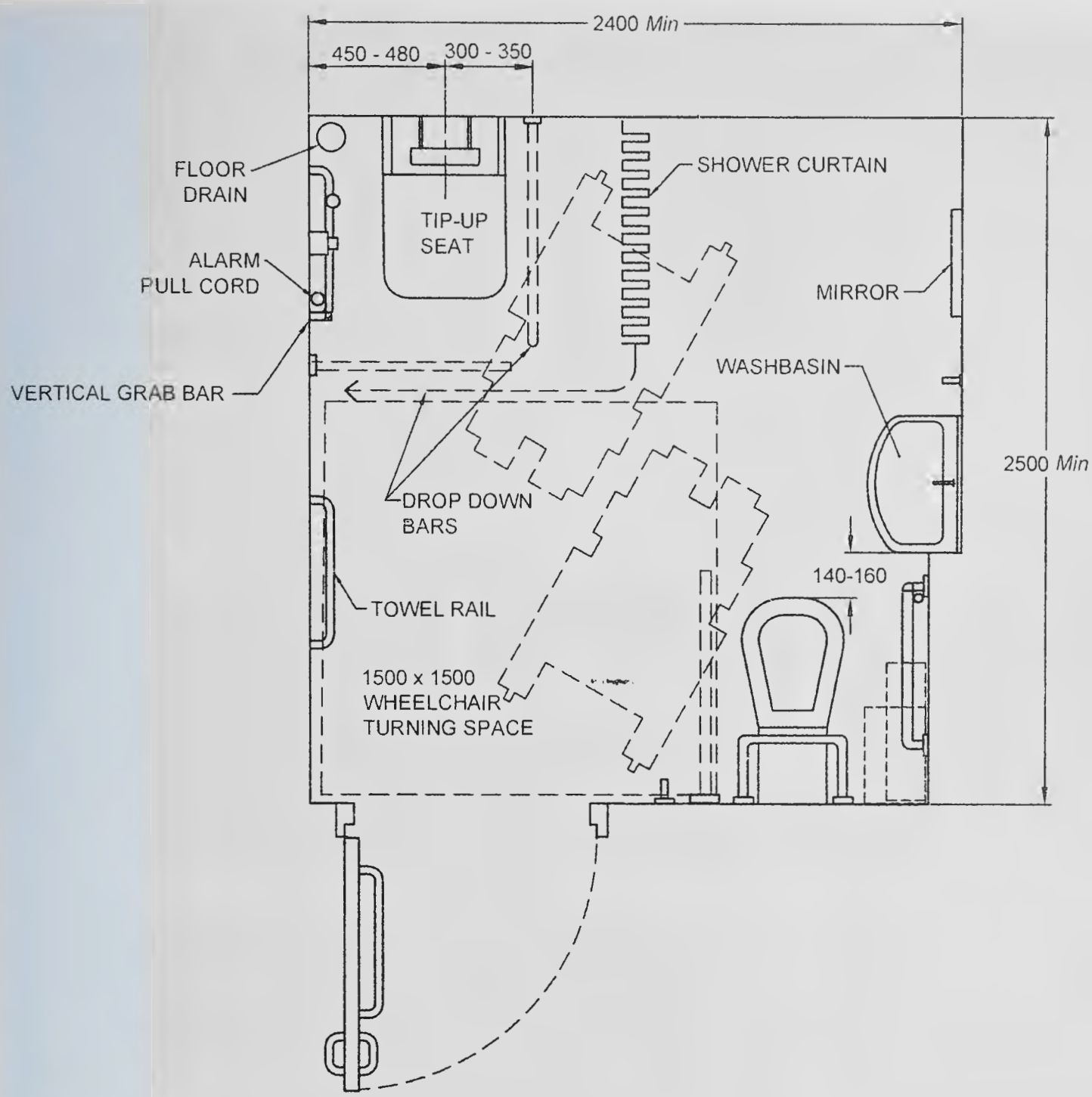

NOTES

1 Layout shown for right-hand transfer to shower seat and water closet.

2 The larger washbasin are set back 200 mm to maintain the correct relationship of its leading edge with the water closet.

All dimensions in millimetres

FIG. 87 SHOWER ROOM INCORPORATING AN ACCESSIBLE CORNER TOILET FOR INDIVIDUAL USE

B-9.14.4 *Grab Bars*

Grab bars in shower shall be set according to **B-9.6** and Fig. 87. The shower area shall be fitted with at least one vertical grab bar which may hold the flexible shower head.

B-9.14.5 *Stationary, Fittings and Accessories*

The length of the flexible (adjustable and detachable) shower hose (telephone shower/ handheld shower), shall be 1 500 mm minimum. The handheld shower head should be provided between 1 000 mm and 1 200 mm above the finished floor. The shower hose fitting should be a minimum 1 300 mm above floor level.

Shower controls and folding seat shall be set according to Fig. 88. Controls shall comply with **B-7**.

The shower room shall be equipped with a door complying with **B-9.4**. Assistance alarm(s) shall be provided in accordance with **B-9.12**.

B-9.14.6 *Individual Shower Room*

A clear floor space of at least 1 350 mm × 900 mm shall be provided on the clear side of the foldable seat, to allow access from a wheelchair, in addition to the manoeuvring space of 1 500 mm (*see* Fig. 85).

The screening of a shower recess shall be either a curtain or a door system that maintains the required circulation and manoeuvring space and does not interfere with the level entry.

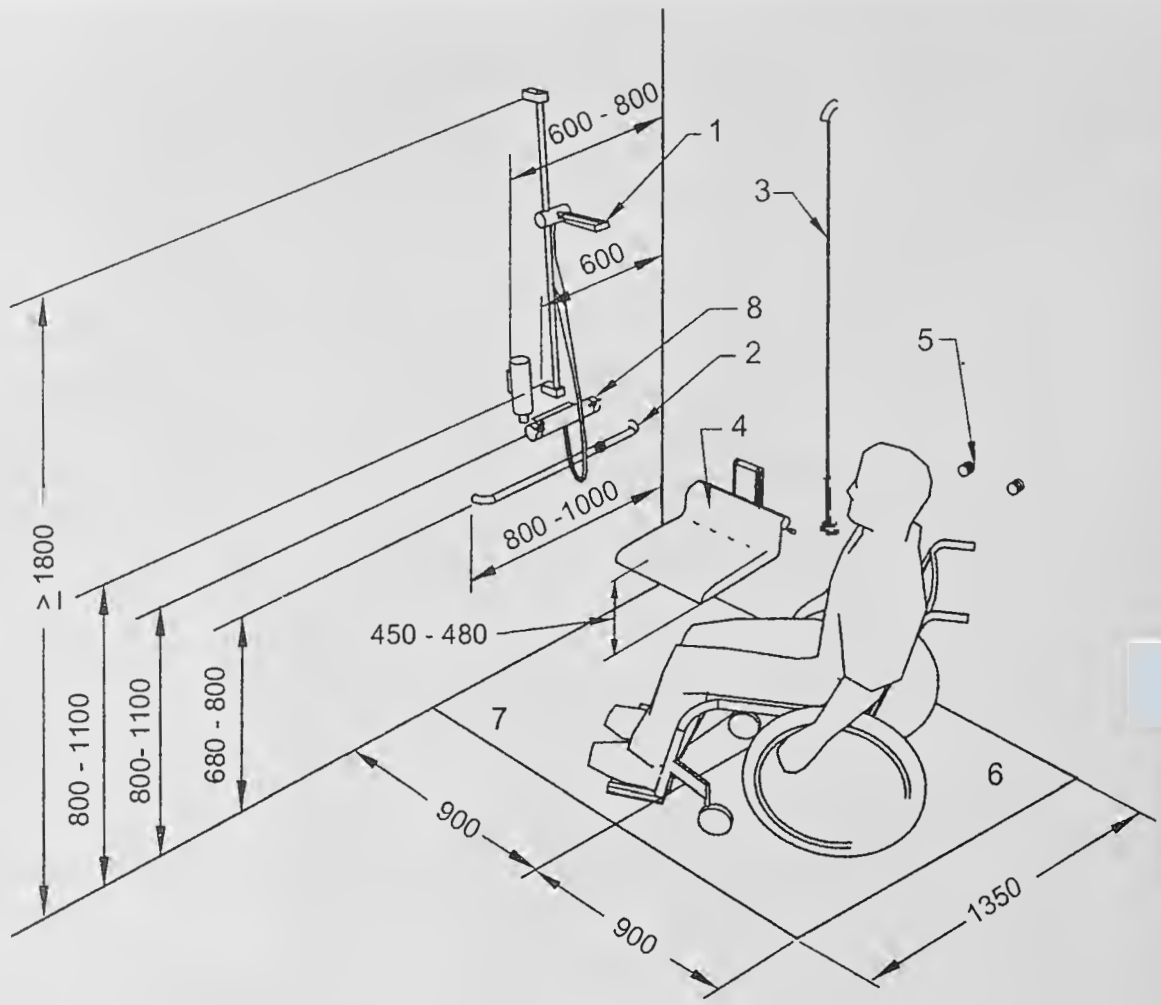

Key

1 Hand-held shower head
2 Horizontal grab bar
3 Vertical grab bar
4 Foldable shower seat
5 Towel hooks
6 Transfer area
7 Wet showering area with gradient 1 : 50 to 1 : 60
8 Shower controls

All dimensions in millimtres.

FIG. 88 EXAMPLE OF A SHOWER PLACE WITH GRAB RAILS, ADJUSTABLE SHOWER HEAD AND FOLDING SEAT

A shower head support grab bar shall be fixed on the wall in the position shown in Fig. 88.

A hand held detachable shower head shall be provided with a flexible hose of minimum length 1 200 mm, and it shall be able to reach within 100 mm of the shower floor.

An adjustable shower head holder shall be provided to support the shower head, and shall,

a) be installed on the shower head holder support grab bar as shown in Fig. 88;
b) allow the graspable portion of the shower head to be positioned at various angles and heights; and
c) allow the graspable portion of the shower head to be located at heights between 1 000 mm and 1 800 mm above the finished floor.

The fastenings, materials and construction of the seat shall withstand a force of 1.1 kN applied at any position and in any direction.

Grab bars shall be fixed on the walls in the positions shown in Fig. 88. All other devices, for example taps, soap holder, shall be situated in an accessible range between 900 mm and 1 100 mm.

B-9.15 Public Toilets

Public toilets shall also comply with the overall requirements under **B-9** with respect to the facilities provided therein so as to ensure that the same are accessible. In all public toilets, the following shall be provided:

a) Male section shall have one urinal with support grab bars for ambulant disabled and at least one urinal for children at a lower height;
b) Both male and female section shall have one WC for ambulant disabled;
c) One Type A unisex accessible toilet room with independent entrance; and
d) Depending on footfall, one Type B accessible toilet in both male and female toilet groups.

B-9.16 Contrast and Lighting

Fixtures and fittings in sanitary facilities should visually

contrast with the items and surface on which they are positioned. Use of the same colour everywhere, for example white basins and white tiles, etc, shall be avoided and colour and tonal contrast should be used to differentiate elements in the environment.

Light switches should be fixed inside all accessible toilet cubicles or the light should automatically switch on when someone enters the room. Timed light switches should not be installed or used.

The minimum illumination measured at 800 mm above floor level shall be 200 lux in the area of the washbasin.

B-9.17 Floor Surface

The floor surface shall be slip resistant, anti-glare and firm.

B-9.18 Signage

Signage shall be clearly visible incorporating the international symbol of accessibility and shall comply with the requirements given in **B-24**. Signage for unisex accessible toilet, toilet for ambulant disabled, unisex change rooms or fitting rooms, unisex shower rooms shall be as shown in Fig. 89. Signage for Type B accessible toilet shall also indicate available transfer option, that is, right hand or left hand as shown in Fig. 90.

B-10 RECEPTION AREAS, COUNTERS, DESKS AND TICKET OFFICES

B-10.1 Hearing and Lip-Reading

Reception areas, counters, ticket offices, especially in

FIG. 89 SIGNAGE FOR DIFFERENT SANITARY FACILITIES

FIG. 90 SIGNAGE INDICATING TRANSFER OPTIONS (RIGHT HAND OR LEFT HAND) IN UNISEX ACCESSIBLE TOILET

noisy environments or those equipped with a separating security screen, should have at least one position fitted with a hearing enhancement system (for example induction loop system) to assist hearing-aid users, as described in **B-21**, and be clearly marked with the appropriate signage/symbol.

Positioning of service counters in front of windows where bright sunshine may come should be avoided as it causes the user's face to be in shadow and hence difficult to lip-read. Service counters equipped with a service screen are particularly difficult. Reflections and glare should be avoided.

B-10.2 Location

Counters and reception desks should be located and clearly identified so that they are easily recognizable from a building entrance. Information reception areas should be positioned near the main entrance. Entrance flooring systems or tactile ground surface indicators can help in locating reception counters for people who have vision impairment. Such products should be designed to minimize trip and slip hazards.

General design requirements for colour and visual contrast should be considered (*see* **B-24.3**).

B-10.3 Space to Manoeuvre

Counters, desks and ticket offices should be accessible to wheelchair users on both sides. A clear manoeuvring space at least 1 500 mm × 1 500 mm shall be provided in front of the counter on the receptionist's side and on the visitor's side: 1 800 mm × 1 800 mm is preferred.

B-10.4 Height

B-10.4.1 The counter level shall be between 750 mm and 800 mm from the floor. Clear knee space underneath shall be minimum 700 mm (*see also* Fig. 91).

B-10.4.2 Reception desks where writing is done by the visitor (for example at hotel receptions) should allow frontal approach by wheelchair users with space to provide clearance for wheelchair user's knees. The counter level and clear knee space underneath shall be as per **B-10.4.1**. At least a part of the desk should also be at a height suitable as a writing place for standing people, between 950 mm and 1 100 mm (*see* Fig. 91).

B-10.5 Lighting

To facilitate lip reading, lighting should provide even illumination. The reading and writing surfaces at counters, desks and ticket offices shall be illuminated to a level of at least 200 lux in the room, and on the desk in a range of 350 lux to 450 lux.

B-10.6 Ticket Systems

If a queue number ticket system is used, it shall be suitably designed to be accessible. All control devices shall be located according to **B-7**. All necessary information shall be given in simple wording with sufficient visual contrast and based on the two-sense-principle (*see* **B-7**, **B-21**, **B-24.1.2**, and **B-24.3**). The ticket machine and the calling system shall provide visual and audible output.

B-11 CLOAKROOM

Attended cloakrooms are staffed rooms where bags/luggage/other articles can be stored securely. Typically, a ticket or receipt is given to the customer, with a

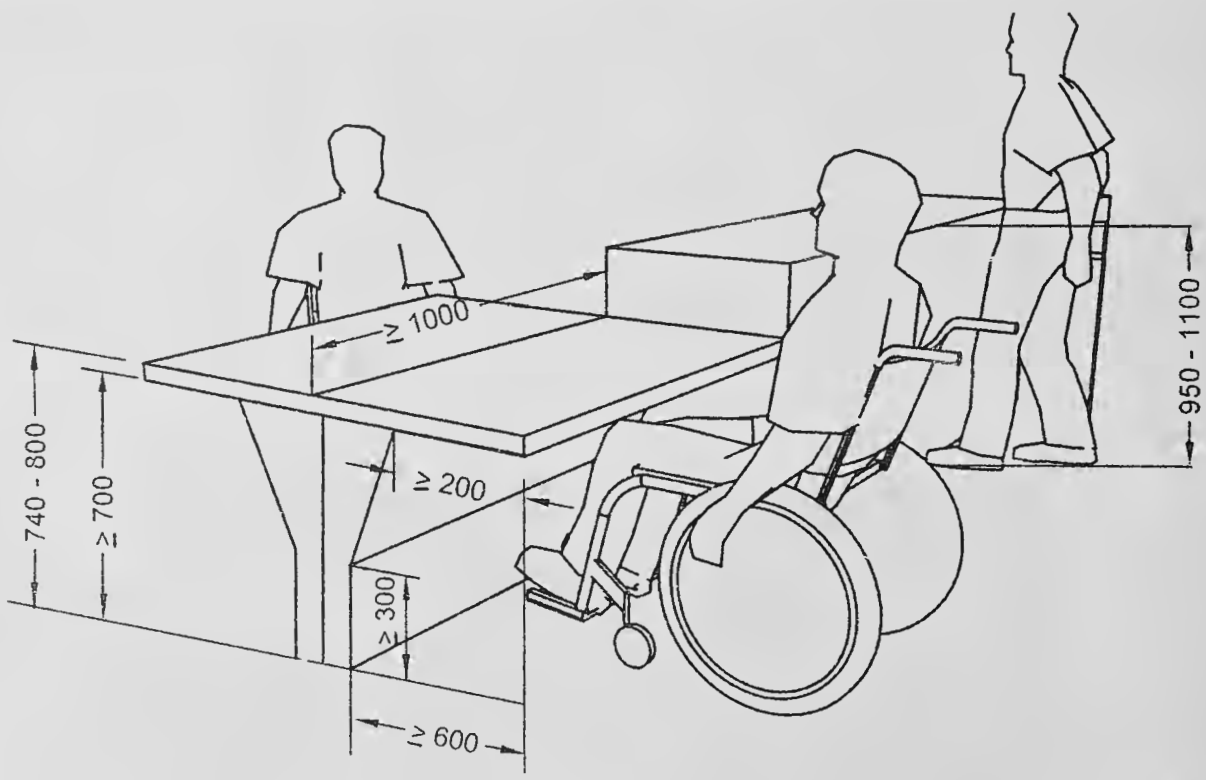

All dimensions in millimetres.

FIG. 91 HEIGHTS OF COUNTERS SUITABLE FOR WHEELCHAIR USERS AND PEOPLE STANDING

corresponding ticket attached to the garment or item. A cloakroom shall comply with the requirements given for reception/counters (*see* **B-10**).

B-12 AUDITORIUMS, CONCERT HALLS, SPORTS ARENAS AND SIMILAR SEATING

B-12.1 Hearing Enhancement Systems

A hearing enhancement system should be provided. The system should also be provided on the stage/platform (*see* **B-21**).

B-12.2 Lighting for Sign Language Interpretation

Adequate provision should be made to facilitate sign language and lip reading. Lighting on the faces and hands of presenters and people signing should be provided at an angle of 45° to 50° from horizontal at ceiling level for people with a hearing impairment to be able to read the presenter's lips and the signer's lips and hands. A suitable contrasting backdrop should be provided, to assist in reading the presenter's lips and hands.

B-12.3 Designated Seating Areas for Wheelchair Users

At least 1 percent of seats shall be designated as seating areas (*see* **B-8** for requirements of seating spaces) for wheelchairs users, with a minimum of two.

For total seats exceeding 51, it is recommended to provide the designated seating areas in the following manner:

a) Total seats 51 to 100, minimum three designated seating areas for wheelchair users;
b) Total seats 101 to 200, minimum four designated seating areas for wheelchair users; and
c) One additional seating area should be provided for every two hundred additional seats or part thereof.

These spaces should be integrated among other seats and allow two wheelchair users to stay together. It is recommended that the armrest on the seats at the end of the row lift up to allow people to transfer from the wheelchair onto a seat. To accommodate groups of wheelchair users, in an auditorium with fixed seats, a minimum of 15 seats shall be foldable or removable to increase the number of designated areas for wheelchair users when necessary.

Some seats should be wider in order to allow larger size people to sit properly.

B-12.4 Access to Stage and Backstage

Access to the stage and to the backstage area shall be provided. Adequate provision should be made to direct the user to the designated spaces.

B-12.5 Row and Seat Numbers

The row and seat numbers should be legible to people who have impaired vision. They should be tactile, of adequate size and have enough visual contrast to the background on which they are mounted. The requirements given in **B-24** should also be considered.

B-12.6 Accessible Changing Rooms

The minimum number of accessible changing rooms should be provided depending on the type and use of the building.

In the event that changing rooms are provided alongside a toilet area, these should comply with the specifications given in **B-9.14**.

A fixed bench should be set at a height of 450 mm to 480 mm above floor level. The bench should be no less than 500 mm wide, 2 000 mm in length, and be provided with a grab bar at a height of 700 mm to 800 mm with a clearance of between 50 mm and 65 mm from the wall.

A clear space of 1 500 mm × 1 500 mm shall be beside the bench.

Coat hooks should be set at different heights, 900 mm to 1 100 mm, and additionally at least one hook at 1 400 mm.

Coat hooks, benches, locker handles and other furnishings should offer good colour and tonal contrast to their backgrounds. Non-slip floor surfaces should be used, and good lighting as well as matte finished surfaces and furnishings should be provided.

An alarm/call bell/switch may be provided (*see* **B-9.12**).

Changing rooms shall have a minimum area of 4 m^2.

B-13 CONFERENCE ROOMS AND MEETING ROOMS

The requirements for sufficient acoustic provision shall be provided in conference rooms and meeting rooms. Accessible toilet facilities, as per **B-9** should be as near as possible to such rooms. A sound augmentation system should be provided. Reverberation time for speech, music, etc, should be as per Part 8 'Building Services', Section 4 'Acoustics, Sound Insulation and Noise Control' of the Code.

All equipment in conference rooms shall be usable by people chairing or participating in the meeting and shall be at a height between 800 mm and 1 000 mm. *See also* **B-7** for requirements of controls and operating devices.

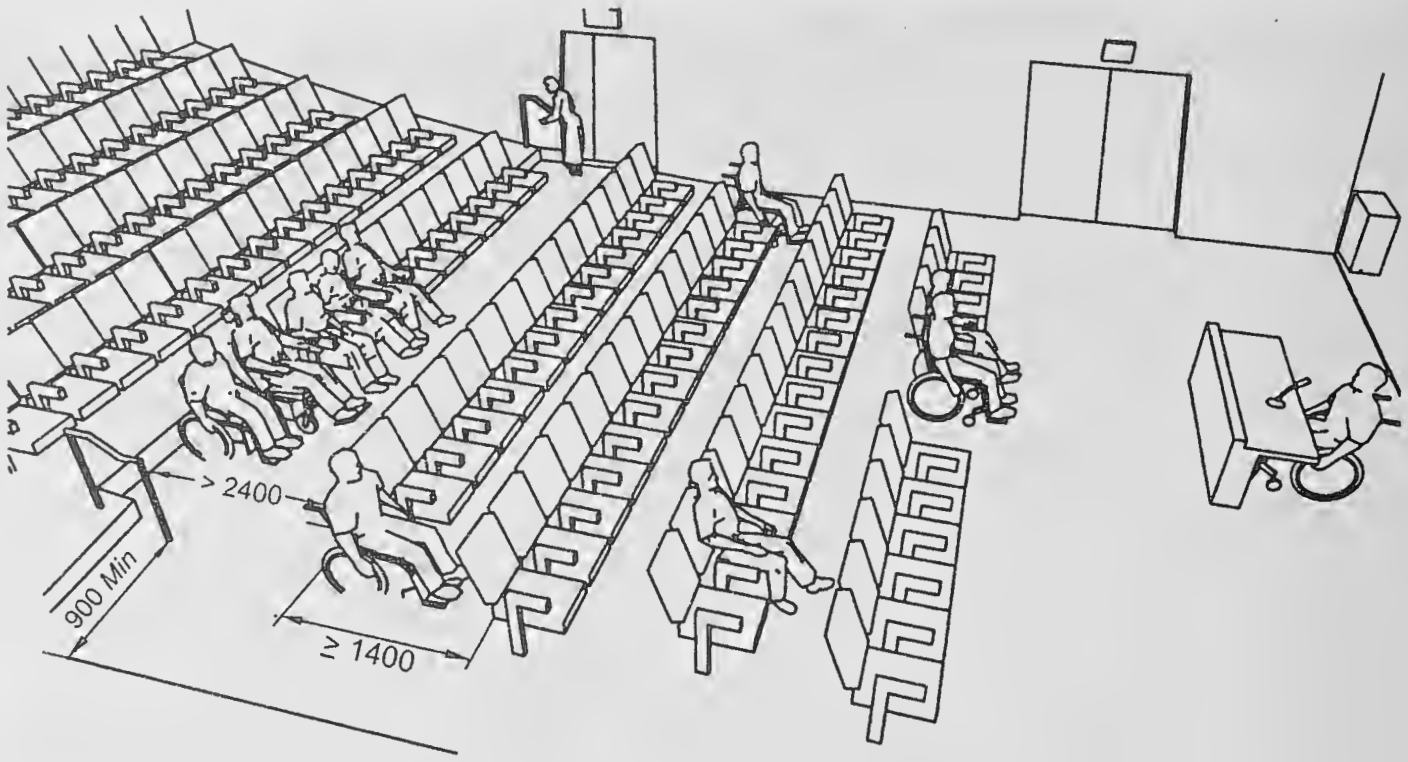

All dimensions in millimetres.

FIG. 92 EXAMPLES OF VIEWING SPACES FOR WHEELCHAIR USERS

B-14 VIEWING SPACES IN ASSEMBLY AREAS

B-14.1 Floor Area

The floor area for a wheelchair viewing space shall be connected to an accessible path of travel and shall meet the following requirements (*see* Fig. 92):

a) It shall be at least 900 mm × 1 400 mm;

b) The depth of the row shall be minimum 2 400 mm;

c) It shall have clear and level surface;

d) It shall have sufficient manoeuvring space;

e) Spaces for several wheelchair users shall be provided. They shall be located beside regular seating rows, for the wheelchair user to be able to stay by his/her accompanying person, if relevant; and

f) It is recommended that the armrest on the seats at the end of the row (aisle seats) lift up to allow wheelchair users to transfer from the wheelchair onto a seat.

Some seats should be provided with foldable armrests, considering transferences (*see* **B-12.3**); some other seats should be wider, considering larger size people.

B-14.2 Sight Lines

Wheelchair user viewing spaces shall provide viewing spaces that are,

a) comparable to those for all viewing positions with a minimum unobstructed eye level up to 1 200 mm; and

b) not reduced or obstructed by standing members of the audience.

Row and seat number identification signs shall be legible to persons who are visually impaired (*see* **B-24**).

B-15 BARS, PUBS, RESTAURANTS, ETC

In restaurants a minimum of 25 percent of the tables shall be usable by wheelchair users according to **B-8.3**. In bars, a minimum of 25 percent of bar counters shall not be more than 800 mm height, and shall have an unobstructed lateral access for wheelchair users.

Sufficient manoeuvring space between tables and the route to the accessible toilet facilities shall be provided.

The general design requirements for colour and visual contrast should also be considered, as described in **B-24.3**.

In self service restaurants, tray slides and counters shall be mounted at 800 mm from the floor for wheelchair users. Food shelves shall be mounted at a maximum height of 1 200 mm and aisle space of minimum 900 mm shall be provided. Where stools and high tables are provided, low tables suitable for wheelchair users shall be provided. Cantilevered table or tables with straight legs at each corner are preferable to central pedestals that might restrict wheelchair access.

B-16 TERRACES, *VERANDAHS* AND BALCONIES

Terraces, *Verandahs* and balconies shall be accessible to all people, including people with mobility impairments.

Parts of these facilities should be covered with a canopy, to give shelter against the weather (sun/rain/snow).

Walking surfaces shall be slip resistant.

B-17 ACCESSIBLE BEDROOMS IN NON-DOMESTIC BUILDINGS

The access to accessible bedrooms in non-domestic buildings (that is hotels, guesthouses, etc) shall comply with the requirements outlined in this annex and in particular with **B-4** and **B-5**. The minimum number of accessible bedrooms in non-domestic buildings shall be in accordance with Table 8.

Rooms accessible for wheelchair users shall be designed for two beds. If a single bedroom accessible for wheelchair users is provided, a queen size bed is preferred, 1 500 mm width × 2 000 mm length.

Free space on at least one of the long sides of the bed shall be provided. This space should be 1 500 mm, and shall not be less than 1 200 mm. At the foot of the bed, at least 1 200 mm is required (*see* Fig. 93 and Fig. 94).

Sufficient clear manoeuvring space is needed to gain access to facilities, including the shower.

There should be a bench for luggage at a height between 450 mm and 650 mm.

The minimum height of a bed shall be between 450 mm and 500 mm, when it is compressed under a 90 kg weight.

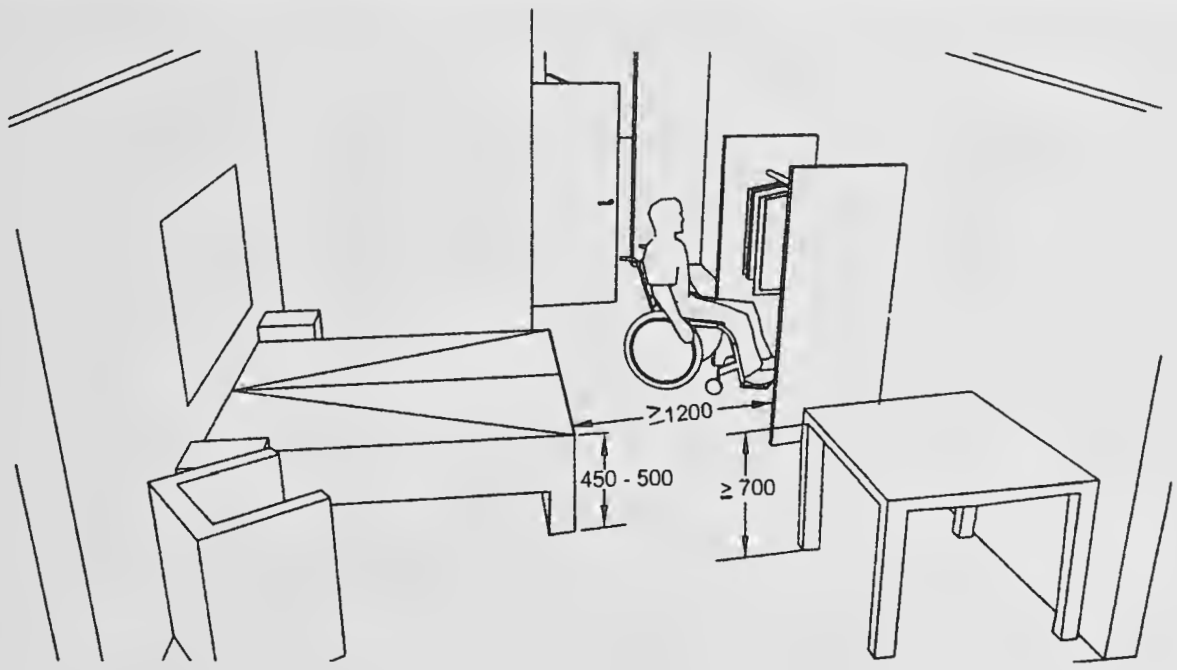

All dimensions in millimetres.

FIG. 93 EXAMPLE OF SPACE ALLOWANCES FOR ACCESSIBLE BEDROOM

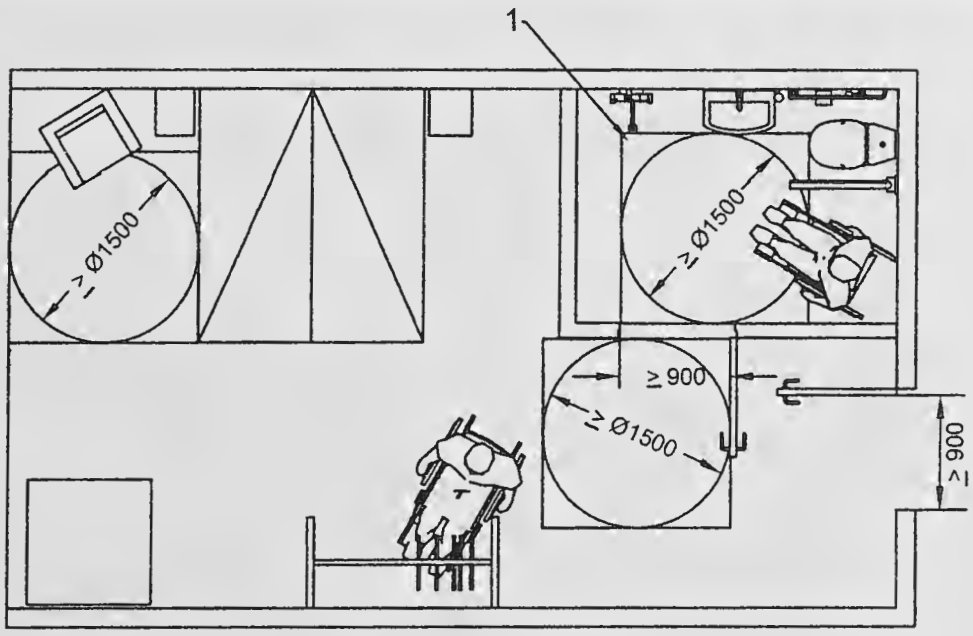

Key

1 Shower area

All dimensions in millimetres.

FIG. 94 EXAMPLE OF SPACE ALLOWANCES FOR ACCESSIBLE BEDROOM AND TOILET/SANITARY ROOM

For communication for people with hearing, vision and cognitive limitations. *see* **B-21**.

Visual and audible alarm systems shall be accessible to warn people with visual and hearing impairments.

Figures 87 and 88 shall be considered for accessible shower with an accessible toilet.

B-18 KITCHEN AREAS

Kitchen areas shall take into account general design considerations in respect of manoeuvring space, slip resistant walking surface and accessible height of controls and devices. Wheelchair turning radius of at least 1 500 mm should be provided between the counter and the opposite walls. Floor surface should allow for easy wheelchair manoeuvrability. Essential kitchen appliances (oven, refrigerator, etc) should be usable by persons both standing and sitting in a wheelchair, and a worktop should be located beside all appliances.

The sink taps should be reachable and easy to operate with one hand. The sink should be reachable for a wheelchair user. If a knee recess is provided under a sink, its underside should be insulated. Counter tops should be between 750 mm and 800 mm in height and provide for clear knee space for a wheelchair user. The clear knee space for a wheelchair user is at least 900 mm wide, 480 mm deep and 680 to 700 mm high (*see* Fig. 95 and Fig. 96). Counter tops/slabs should have rounded edge. All surfaces should be smooth to facilitate sliding of heavy items from one area to another. Slide-out working spaces are useful in providing an over-the lap working surface. For people with ambulatory disabilities, stools (preferably with

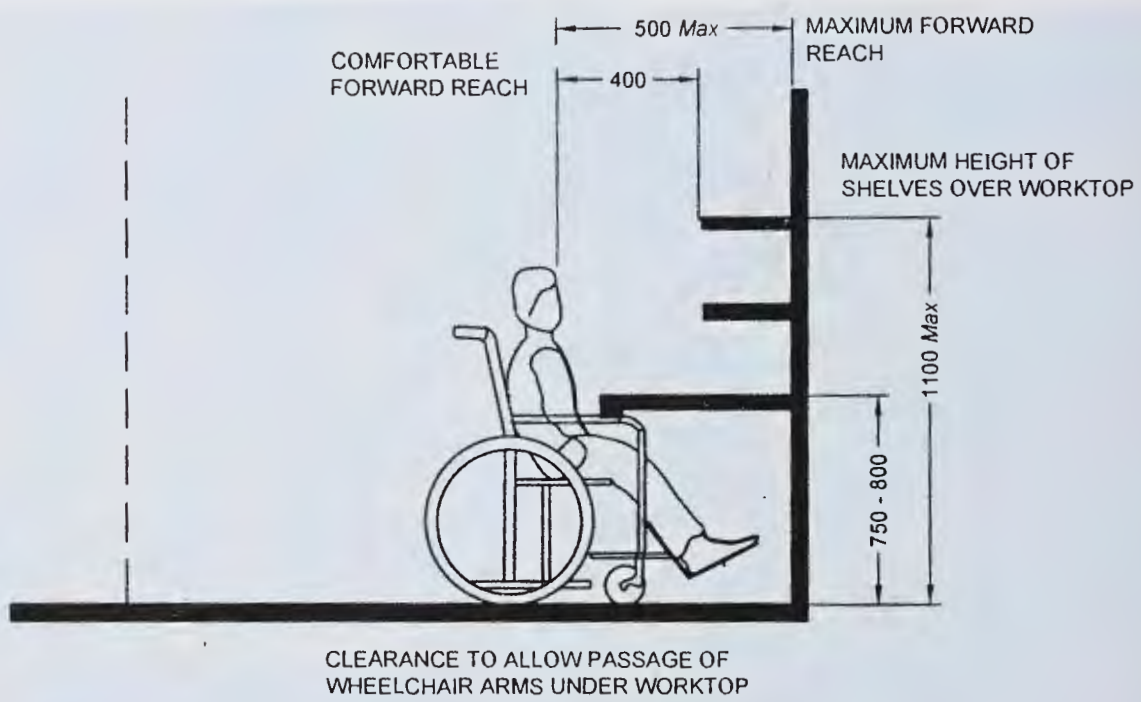

All dimensions in millimetres.

FIG. 95 REQUIREMENTS FOR COUNTER TOP

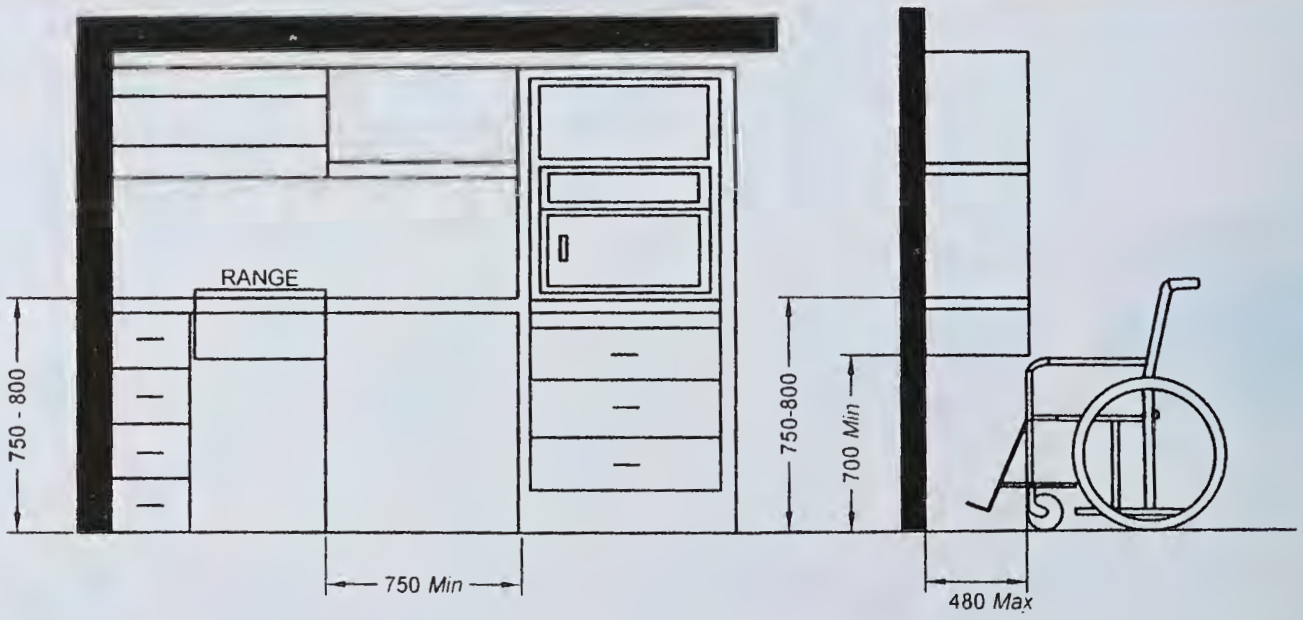

All dimensions in millimetres.

FIG. 96 KITCHEN SHELVES AND CABINETS

back and foot rests) should be provided strategically at the main work area.

A section of the shelves should be within reaching distance for a wheelchair user, between 300 mm and 1 100 mm above floor surface.

All controls and operating mechanisms should comply with **B-7.**

B-19 STORAGE AREAS

The minimum manoeuvring space and reachability for wheelchair users should be taken into consideration when designing and constructing a storage area. Part of the shelves should be within reaching distance for a wheelchair user, between 300 mm and 1 100 mm above the floor. If a door is provided, it should open outwards.

B-20 ACCESSIBLE HOUSING

B-20.1 Exterior, Entrance and Access within the Building

The site planning and development. approach to the building and access at entrance and within the building shall be in accordance with **B-2**, **B-4** and **B-5**.

B-20.2 Interior

B-20.2.1 *Furniture Arrangement*

Sufficient manoeuvring space should be made available (at least 1 500 mm turning radius) for wheelchair user or person ambulating with an assistive device such as a walking frame or a white cane. Clear passage should be allowed from one room to the other. Unrestricted access should be provided to electrical outlets, telephones and wall switches. All controls and operating mechanisms shall comply with **B-7** and a clear floor space for the wheelchair, of at least 900 mm × 1 200 mm should be provided in front of all the utilities and furniture.

B-20.2.2 Floor Surface

Floor surface shall comply with **B-5.2.7**.

B-20.2.3 *Doors and Windows*

Doors and windows shall comply with **B-5.3** and **B-5.4**, respectively.

B-20.2.4 Vertical circulation within the house shall be in accordance with **B-6**.

B-20.3 Bedroom

The bedroom should be planned to provide a 1 500 mm turning in space for wheelchair, at least near all the doors. There should be a clear floor space of at least 900 mm × 1 200 mm in front of all furniture.

The minimum height of a bed shall be between 450 mm and 500 mm, when it is compressed under a 90 kg weight. Stability may be improved by placing the bed against a wall or in corner of the room (except for when the wheelchair user plans to make the bed). The bed should be so positioned so as to provide free space on at least one of the long sides of the bed. This space should be 1 500 mm, and shall not be less than 1 200 mm. At the foot of the bed, at least 1 200 mm is required (*see* Fig. 97).

A bedside table or cabinet between 450 mm and 900 mm from the floor may be useful to hold a lamp, telephone, necessary medications and a call bell if assistance is needed.

Wall hook installed at a height of 1 100 mm to 1 300 mm may be a useful addition to the closet area.

The closet should have a clear floor space of at

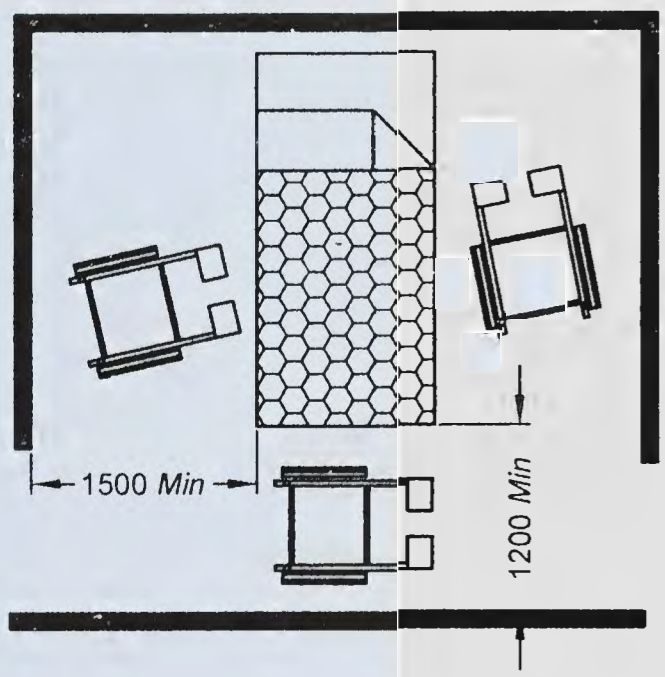

All dimensions in millimetres.

FIG. 97 SPACE AROUND BED

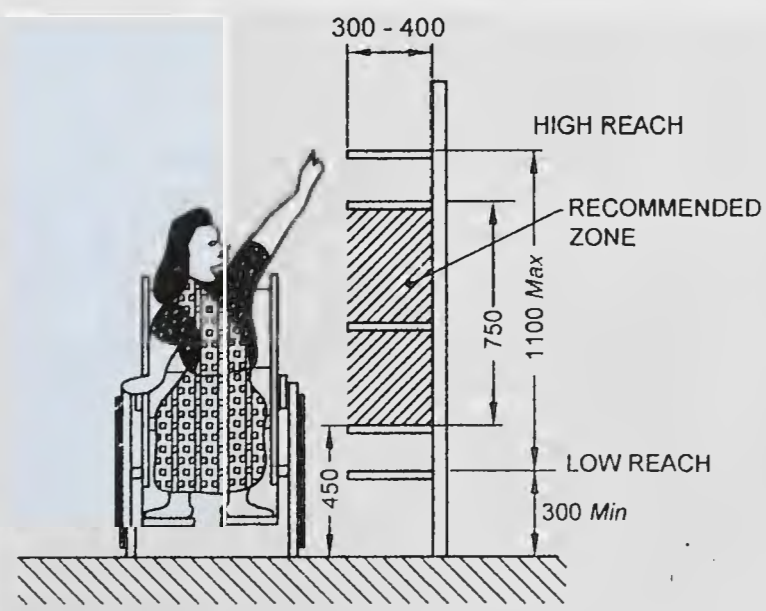

All dimensions in millimetres.

FIG. 98 STORAGE SPACE

least 900 mm × 1 200 mm. It should have the clothes bar at a height of 1 200 mm from the floor. The shelves should be installed at various levels between 300 mm and 1 100 mm from the floor surface (*see* Fig. 98). The door handle should be conforming to **B-7**.

B-20.4 Living Room

At least 1 500 mm turning in space for wheelchair should be provided near all entry points to the living room. A living-dining combination is preferable to a kitchen-dining combination (except when the wheelchair user does the cooking).

The seating space for a wheelchair user at the dining table should provide a clear knee space. The clear knee space for a wheelchair user is at least 900 mm wide, 480 mm deep and 680 to 700 mm high.

Floor surface should comply with **B-5.2.7**.

There should be a clear floor space for the wheelchair of at least 900 mm × 1 200 mm in front of all the fixtures. Chair seat heights should not be less than 500 mm.

Controls and operating mechanisms should comply with **B-7**.

B-20.5 Toilet or Sanitary Room

Toilet or sanitary room shall comply with **B-9**

B-20.6 Kitchen

Kitchen shall comply with **B-18**.

B-21 ACOUSTIC ENVIRONMENT

B-21.1 General

The acoustic environment in a building should be suitable for its intended function for all building users. This includes all hearing people especially the hard of hearing. For deaf and hard of hearing people, good lighting is essential to understand the sign language interpreter and/or optical information devices. Many people with some degree of hearing loss have assistive devices to amplify sound, such as hearing aids or cochlear implants.

However, if the acoustic environment is not supportive of these devices, they do not work effectively. In addition, many people who have a mild or temporary hearing loss and do not have assistive devices may not be able to access information or communicate effectively. Most people with hearing loss and people without hearing loss rely on sight to lip read or interpret facial expressions; therefore where the acoustic environment is regarded as important, suitable lighting, colour and visual contrast should be considered to benefit all building users.

Information normally conveyed in visual form may not be accessible to people who are blind or partially sighted. This information should also be conveyed audibly; the clarity (speech transmission index) of this information is affected by the acoustic environment.

The following design considerations should be taken into account to maximize the functionality of the acoustic environment, and to support the use of assistive devices.

B-21.2 Acoustic Requirements

People with hearing impairments have particular difficulty in making out sounds and words in noisy environments. Adequate sound insulation should minimize noise from both outside and inside the building. Noise can often be mitigated, for example by introducing a buffer zone between a meeting area and extraneous noise, or partitioning a restaurant. The acoustics in a room are essentially connected with its location in the building and with the acoustic insulation of the building elements. The distribution of noise within the room itself and from exterior sources depends on the sound absorption of the surrounding surfaces and furnishing of the room. The calculation of acoustic absorption is significant in rooms where acoustic quality is important and also where noise reduction is required.

Good acoustics shall be achieved by optimizing the reverberation time, by considering the use/purpose of the room and by ensuring a low background noise level. The optimum reverberation time of a room should be determined having regard to the volume and the intended purpose of the room.

The geometry and shape of the room, as well as the distribution of sound absorbing and reflecting surfaces, are important. Surfaces that absorb sound should be carefully selected, as well as surfaces that reflect it. To develop an effective acoustic environment, sound absorbent surfaces can be used on floors and ceilings.

The optimum reverberation times for communication, speech only or music performance are different and depend on the size and shape of the room. Requirements for reverberation time shall be as per Part 8 'Building Services', Section 4 'Acoustics, Sound Insulation and Noise Control' of the Code.

B-21.3 Hearing Enhancement Systems

A hearing enhancement system fitted at an information point can significantly assist communication for a person with a hearing impairment who uses a personal hearing aid, or has a cochlear implant. Hearing aids or cochlear implants may have a Telecoil (T-switch) which

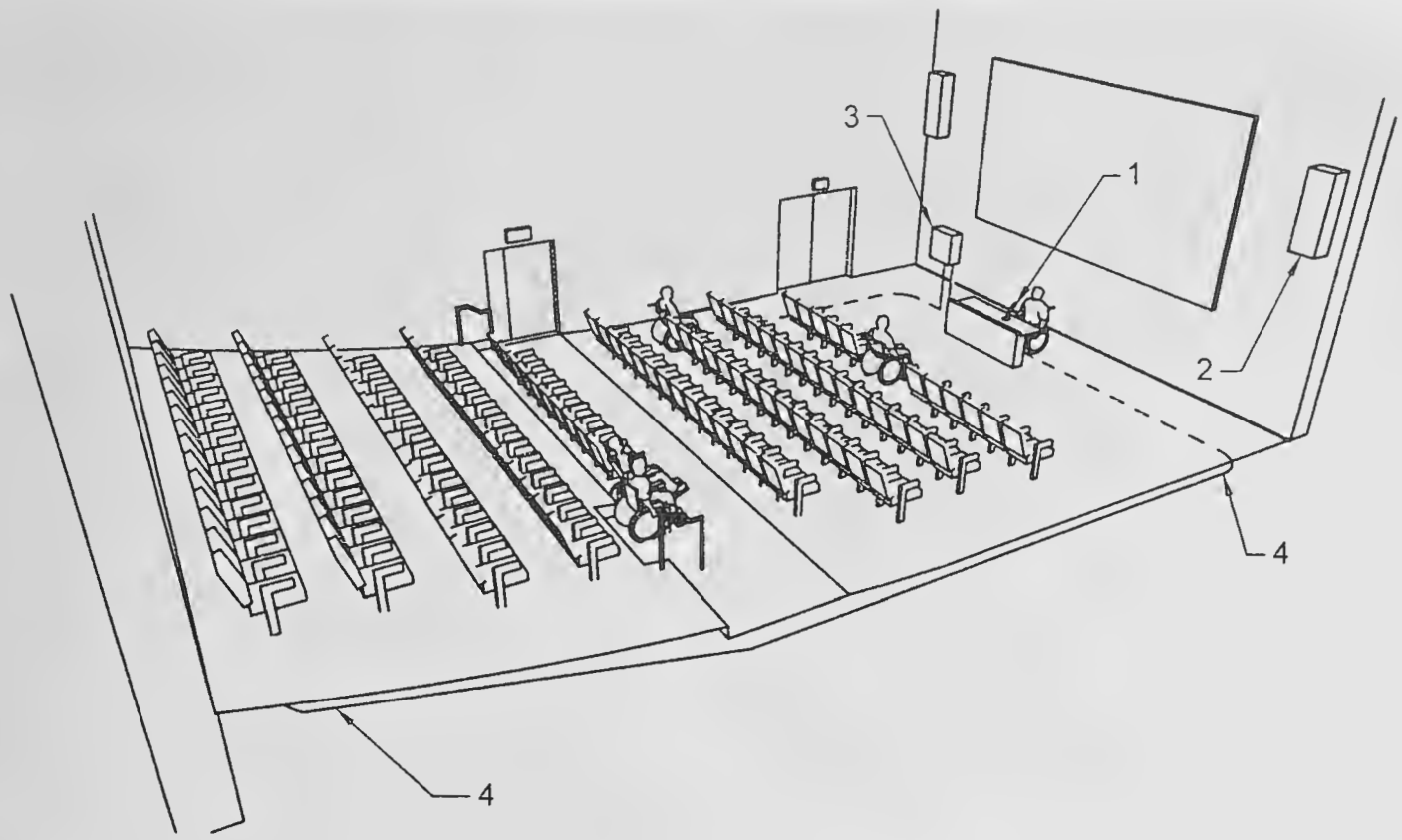

Key
1 Microphone
2 Loudspeakers
3 Induction loop amplifier
4 Induction loop

FIG. 99 EXAMPLE OF INDUCTION LOOP SYSTEM IN CONFERENCE ROOM

allows the listener to receive the sound signal directly.

NOTE — Hearing enhancement systems amplify audible communication and can be helpful to people who have a hearing impairment. They include a direct wire system, an inductive loop system, an infrared system, or a radio frequency system. All of these systems transmit a signal. Special purpose receivers are required for infrared and radio frequency systems, while hearing aids equipped with a T-switch are capable of receiving the signal from an induction loop system. Receivers can be equipped to be compatible with hearing aids.

Hearing enhancement systems, for example induction loops and infrared signal transmitting systems, shall be provided in conference and meeting areas. All seats, including the front scene, should be covered by hearing enhancement systems like induction loops (*see* Fig. 99). Portable hearing enhancement systems may be an alternative.

B-22 LIGHTING

B-22.1 General

The planning of artificial lighting should be co-ordinated with the planning of natural lighting, the choice of surfaces and colours. Lighting can be used to accentuate interior colour, tone and texture schemes, and to facilitate orientation. The lighting should not lead to glare or excessive contrast.

B-22.2 External Lighting

The routes to and around a building shall have sufficient artificial lighting to facilitate awareness of changes of level or gradient. The positioning of lights should not cause glare, reflection or shadows. Ramps, entrances, steps, signage, etc, to the building should be well lit artificially, with an illuminance of at least 100 lux.

B-22.3 Natural Lighting

It should be possible to shade windows from bright light.

B-22.4 Artificial Lighting

Lighting should provide visual conditions consistent with the visual task, orientation and safety. Key factors are,

a) level of illumination of horizontal and vertical surfaces;
b) limitation of glare from a light source or reflections;
c) uniformity and luminance distribution;
d) direction of lighting and shading; and
e) colour rendering.

NOTE — Good artificial lighting where needed is crucial for everyone, ensuring that vision impaired people are able to use buildings safely and conveniently, and that people with hearing impairments are able to lip read.

B-22.5 Lighting to Facilitate Wayfinding

Lighting should facilitate wayfinding. Building elements should be marked by increased illumination.

The lighting in critical locations such as entrances, corridors, stairs, changes of level and workstations should facilitate their identification.

Time dependent switch devices shall have a progressive switch off to reach the next switch. An automatic switch on detection system shall cover the complete surface of ramps and stairs. Lighting shall provide sufficient time necessary for users to travel safely along ramps.

Lighting which switches off when people are still on ramps or stairs should be avoided.

NOTE — Ramps and stairs are the most hazardous places for falls.

B-22.6 Controllable and Adjustable Lighting

All lighting, including natural light, should be controllable to avoid glare. Artificial lighting may be adjustable to suit individual needs.

B-22.7 Light Levels in Different Areas

Good light levels should be provided in hazardous areas such as stairs or changes in levels along a route, around doors and at communication or information systems. A minimum light level should be provided according to the visual task as given in different clauses of this annex.

B-22.8 Lighting in Auditoriums

Lighting conditions that support lip reading and sign language should be provided. The environment should be designed to avoid reflection and glare, and it should be possible to adjust both natural and artificial light.

B-22.9 Glare and Shadows

Lighting should not produce glare. Glare and shadows may be avoided by,

a) shielding or shading light sources;
b) use of indirect lighting;
c) appropriate location of light source in relation to the direction of vision and to the object that is to be observed;
d) up lighters, with light sources at floor or low level, should not be used;
e) avoidance of windows at the end of corridors;
f) avoidance of light sources against dark surfaces by choosing light colours for ceilings or walls; and
g) avoidance of abrupt transitions from light to dark spaces. Indoor and outdoor lighting around the doorway should be suitably adjusted to prevent dazzle when entering or leaving the building.

NOTE — Due to the increase of optical scatter in the eye, the effects of glare are exacerbated for elderly people and for individuals with some types of vision impairments (for example cataracts, corneal edema, and vitreous opacities). Glare can cause discomfort and interfere with task performance by decreasing the perceived contrast in visual displays (that is disability glare).

The provisions given in Part 8 'Building services, Section 1 Lighting and Natural Ventilation' of the Code in respect of glare shall also be complied with.

B-23 EMERGENCY EVACUATION IN BUILDINGS

Means of egress, alarm panel, alerting systems, evacuation plans, emergency evacuation routes, provision of area of rescue assistance/refuge areas and signages in such areas shall be in accordance with Part 4 'Fire and Life Safety' of the Code.

B-24 ORIENTATION AND INFORMATION, SIGNAGE, GRAPHICAL SYMBOLS AND VISUAL CONTRAST

B-24.1 Orientation and Information

B-24.1.1 *General*

The built environment should be designed, constructed and managed to facilitate orientation. Orientation means to find one's way, to avoid obstacles which could cause hazards, and to know when one has reached the destination.

Suitable provision shall be made at the entrance to the building and at decision points within the building to describe the location and nature of the building. In very complex buildings, visual, audible and tactile information should be provided.

Means to achieving satisfactory orientation conditions are,

a) planning layouts;
b) wayfinding and guided paths with TGSI (as given in this annex), other physical support of information (*see* **B-24.3**);
c) signage and symbols (*see* **B-24.2**);
d) visual contrast (*see* **B-24.3**);
e) choice of colours (*see* **B-24.3.2**);
f) avoiding surfaces which might make orientation more difficult;
g) lighting (*see* **B-22**); and
h) visual, audible and tactile information according to the two-sense principle (*see* **B-24.1.2**).

Orientation should be facilitated by differences in acoustics, material, light and colour. The design should indicate the use of the building elements.

To facilitate people with vision impairments who have

some residual vision, routes to be followed should have a difference in luminance to the surroundings (*see* **B-24.3**).

Additional illumination or visual contrast and tactile information, such as a change in material or tactile walking surface indicators, should be provided at decision points such as entrances, staircases, lifts, etc, to assist orientation and wayfinding.

Tactile ground surface indicators should be used to indicate directional orientation information where no other clues indicate the path of travel. Across large areas, halls and complex buildings, blind people need a tactile route or guiding pattern to follow (*see* **B-2.5**).

In complex buildings, an audible beacon should be installed in addition to visual and tactile information to provide information on decision points.

B-24.1.2 *Principle of Two Senses*

Supportive measures for information and wayfinding shall be provided in a format that is accessible to people with sensory impairments according to the principle of two senses, as given below (*see also* **B-6.4.7**):

a) audible/tactile information for people with vision impairments, and
b) visual information for people with hearing impairments.

B-24.1.3 *Audible Information*

Consideration should be given to provide suitable amplification and acoustic conditions; the message should be easily understandable and unambiguous. *See also* the principle of two senses in **B-24.1.2**.

Public address systems should be clearly audible and equipped with a hearing enhancement system as described as given in **B-21**.

Emergency information and warning systems are described in **B-6.4.8**, **B-9.12** and **B-9.13**.

B-24.1.4 *Levels of Information*

Information should be clear, concise, accurate and timely. Clarity of information can be defined as information that is legible and easily understood. Clarity of information therefore presupposes that people are able to distinguish between the different types of information that they receive.

Information can be divided into three levels,

a) *Level 1* — Safety information;
b) *Level 2* — General information; and
c) *Level 3* — Advertising information.

It is important that these three levels of information be clearly distinguished.

Information should be complete but concise. Too much information is difficult for people to retain.

All information provided should be accurate and consistent.

NOTE — Universally accepted pictograms should be used in preference to text.

B-24.2 Signage and Graphical Symbols

B-24.2.1 *General*

Signs should be readable and legible for people who have vision or mental impairments. Well-illuminated, clear and readable signs shall be placed at a consistent height (*see* **B-24.2.4**).

Information with text should be supplemented with graphical symbols to facilitate comprehension for everyone (*see* **B-24.2.16** for graphical symbols).

Signs should be provided in relief and Braille (*see* **B-24.2.10**).

The signs should be made of robust materials and be easy to change, clean and repair. Some suggested materials for signage are wood, acrylic and aluminium composite panel (ACP).

An excessive quantity of signs in close proximity should be avoided, as well as visual material placed too close to wall fixed signs (for example posters, timetables, etc).

Where Braille is used as a complementary or independent feature to tactile signs it should be easy to locate.

B-24.2.2 *Main Types of Signs*

The main types of signs are:

a) *Orientation signs* — Sketches, plans, models, etc.
b) *Directional signs* — Directional information from point A to B.
c) *Functional signs* — Explanatory information.
d) *Informative signs* — Purely informative, for example a name.
e) *Signs for emergency exits* (*see* Part 4 'Fire and Life safety' of the Code).

B-24.2.3 *Placement of Signs*

B-24.2.3.1 *Placement outside the building*

Informative signs shall be located adjacent to the entrance door and be illuminated and clearly visible. The sign shall be placed on the latch side. Design and size of letters shall be in accordance with **B-24.2.5**.

Communication systems shall also be placed on the latch side and preferably in a range of 1 000 mm to 1 200 mm above ground level.

B-24.2.3.2 *Placement in the building*

Orientation signs should be located in accessible places adjacent to, but not directly in, main access routes so that they can be examined without disturbance.

In public buildings there should be an orientation plan immediately inside the main entrance. This plan should follow all relevant design criteria stated in this Part and in **B-24.3**.

Directional signs should clearly direct people to the facilities. They should be located where directional decisions are made and constitute a logical orientation sequence from the starting point to different points of destination. They should be repeated, not too often, but every time there is a possibility of alteration in the traffic direction.

Directional signage to washrooms should be provided in all parts of a precinct or building.

Stairwells should have information signs identifying all points of entry and exit.

Floor numbers shall be located on each floor at top and bottom of stairs, on handrails and on each side of the outer frame of each lift-car entrance on each floor and prominently displayed elsewhere so they are visible from the lift car at each level.

B-24.2.4 *Height and Location of Signs*

Directional and functional signs should be located below 1 600 mm where they are easy to approach, to touch and read the raised signs with the fingers (*see* **B-24.2.10** to **B-24.2.12**).

Signs should be located where they are clearly visible to people who are seated, standing or walking.

Signs should be placed between 1 200 mm and 1 600 mm from the floor or ground surface. It should be possible to approach the sign to be read from a short distance (*see* Fig. 100).

Where it is likely that the sign may be obstructed, as in a crowded situation, the signs shall be placed at a height of at least 2 100 mm above the floor. The same requirement applies to signs fixed to the ceiling or projecting from walls. In that case, there should be two signs; one that can be seen from a distance above other people's heads, one as a complement at the height recommended above.

Where there is sufficient space, door signs shall be located on the latch side of the door within 50 mm to 100 mm of the architrave (*see* Fig. 101).

B-24.2.5 *Font and Size of Lettering*

The fonts should be easy to read. The font style should be a sans serif font similar to Helvetica or Arial medium.

The letter height depends on the reading distance. A letter height between 20 mm and 30 mm for each metre of viewing distance is preferred. The letter height should not be less than 15 mm.

Usage of too many type sizes on any one sign should be avoided. Also italics, script texts, condensed texts, light stems should be avoided. Consistent font stem widths should be used.

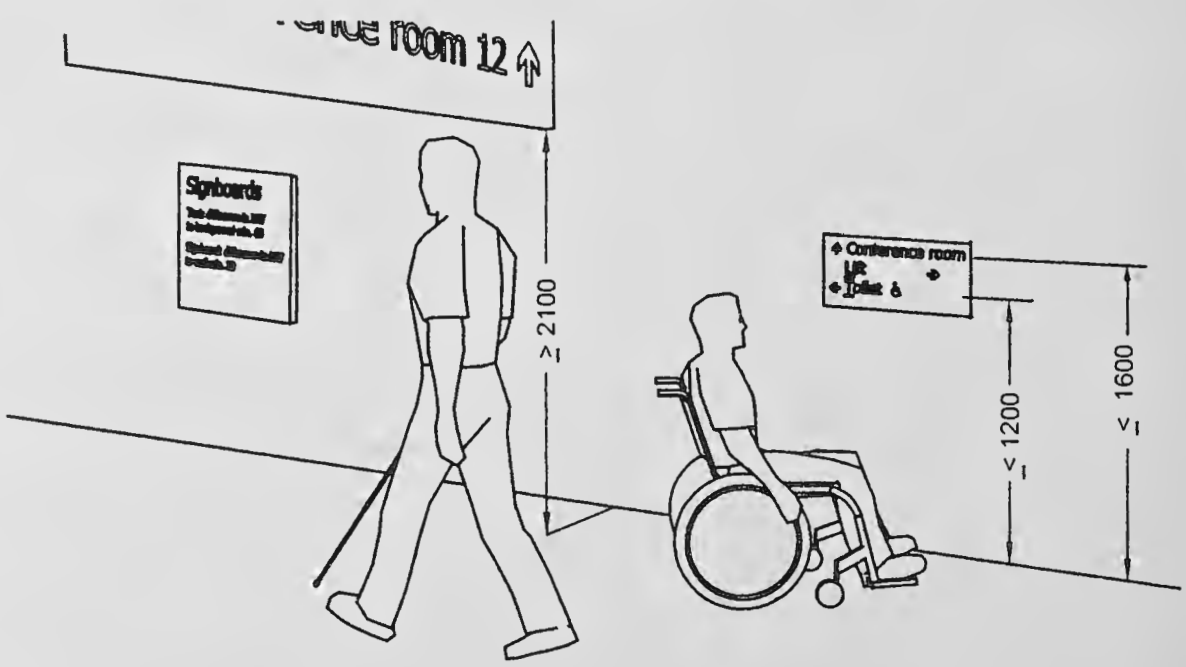

All dimensions in millimetres.

FIG. 100 HEIGHT OF SIGNS

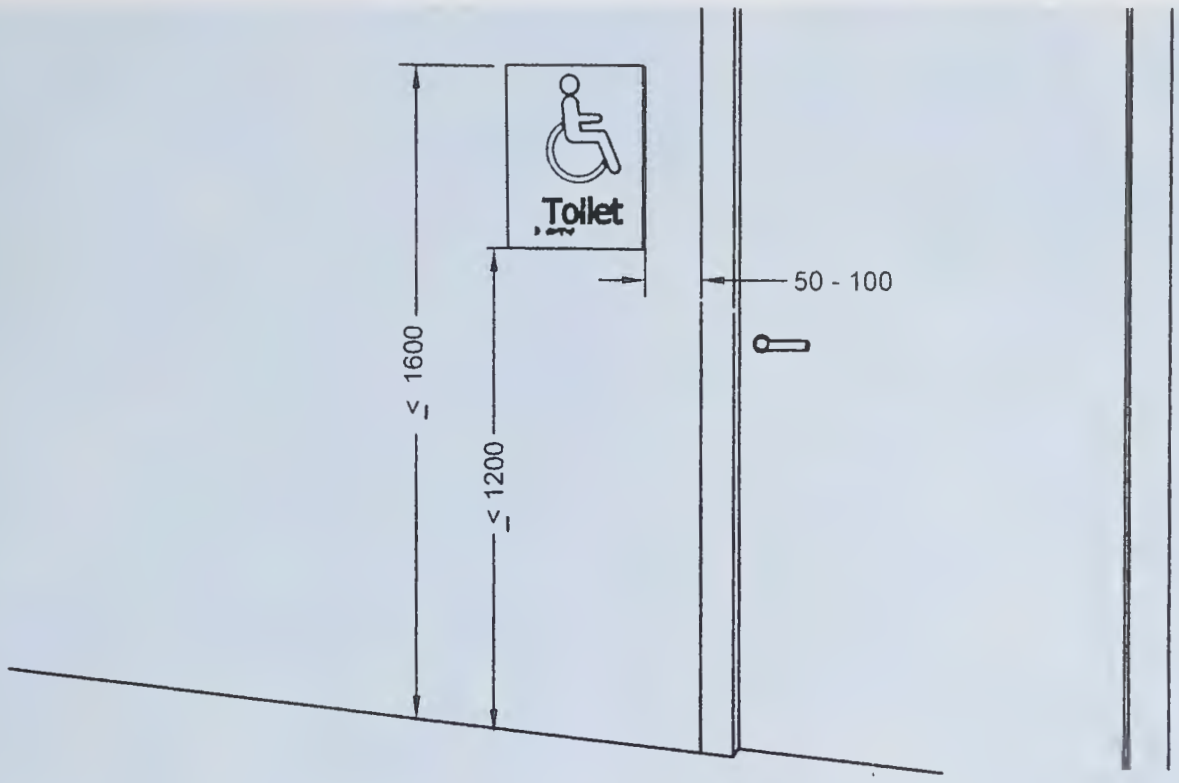

All dimensions in millimetres.

FIG. 101 LOCATION OF DOOR SIGNS ON THE LATCH SIDE OF THE DOOR

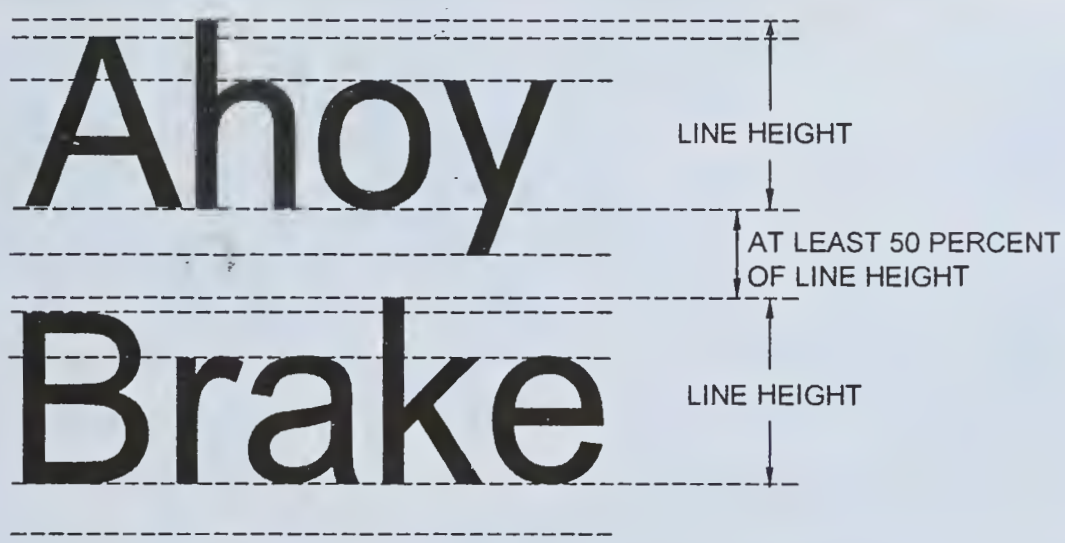

FIG. 102 LINE HEIGHT AND SPACING

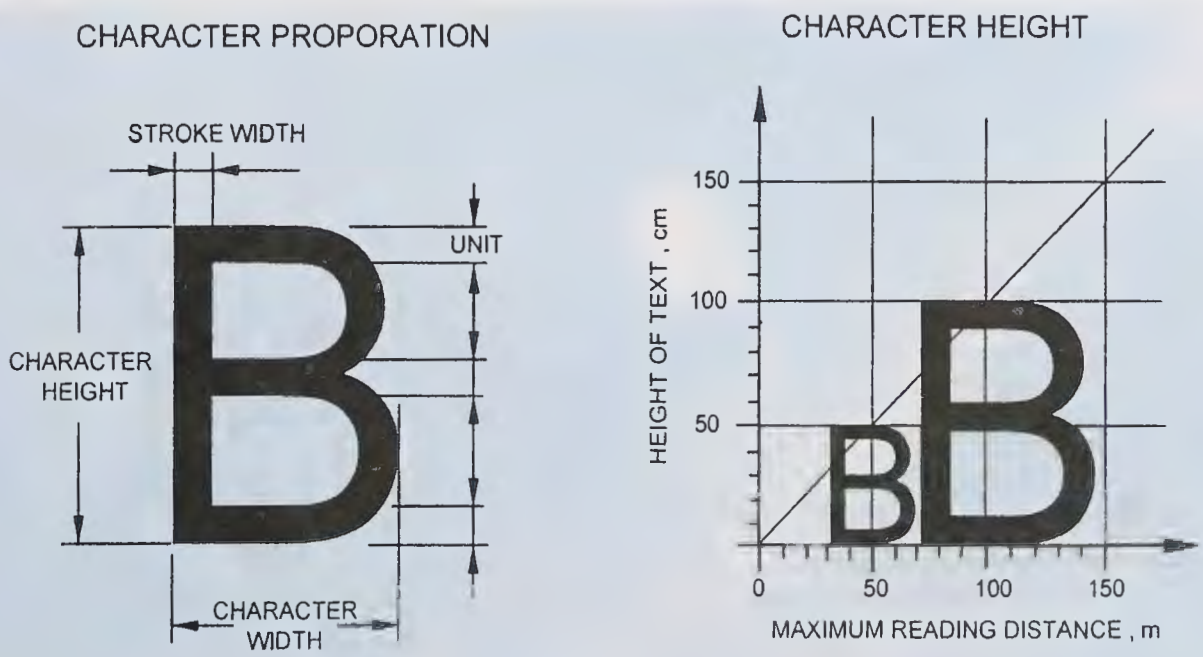

FIG. 103 DIMENSIONS OF CHARACTER IN A SIGNAGE SYSTEM

It is recommended that messages of single words or groups of words begin with an upper case letter and continue with lower case letters (sentence case).

The words should not be placed too close together. Adequate height spacing should separate the lines. Lines of text should be ranged from a vertical line (unjustified).

Signs with a single word may be centre justified, else the text should be left justified.

The spacing between two lines shall be 50 percent of the line height (*see* Fig. 102).

A style shall be chosen based on a character width-to-height ratio within 3:5 and 1:1 and the stroke width-to-height ratio between 1:5 and 1:10. It shall be consistent for each sign (*see* Fig. 103).

B-24.2.6 *Differences in LRV*

Minimum difference in LRV for small targets, such as signs and inscriptions, to signboards, should be 70 points.

Signboards should have a minimum difference in LRV from the background of 30 points.

Red-green combination should be avoided. Difficulties in perception can also appear when using the colours green, olive green, yellow, orange, pink and red (*see also* **B-24.3** for contrast).

B-24.2.7 *Glare Free*

Signs should be glare free when mounted. This depends on how the sign is placed, the material and the illumination. The background, graphical symbols, logos and other features shall be of a matte or low sheen finish.

B-24.2.8 *Illumination*

Signs should be well illuminated with no glare with uniform lighting over the surface of the sign of between 100 and 300 lux. Minimum acceptable level of lighting for directional signage, maps and text panel is 200 lux. Signs can be luminescent or artificially lit.

B-24.2.9 *Understandable*

Signs should be readily understandable. They should be designed so as to be simple and easy to interpret. The message should be unambiguous.

Short sentences and simple words should be used. Abbreviations and very long words are hard to understand and should be avoided.

B-24.2.10 *Provision of Raised Tactile and Braille signs*

Signs on panels in lifts, room numbers of rooms in hotels, doors to public toilets and so on shall be raised tactile and include Braille (*see also* **B-24.2.4**).

The preferred height of raised tactile information is between 1 200 mm and 1 600 mm. Signs with tactile information placed at a lower height should be mounted at an angle from the horizontal (preferably 20° to 30°, maximum 45°).

Key

1 Raised tactile letters and graphical symbols, height 15 mm to 55 mm, minimum relief 0.8 mm (1 mm to 1.5 mm relief is preferred)

2 Braille text

3 Braille Locator

FIG. 104 EXAMPLE OF RAISED TACTILE SIGNS AND BRAILLE

B-24.2.11 *Tactile Letters, Figures, Signs and Graphical Symbols*

The height of letters, figures, signs and graphical symbols shall be between 15 mm and 55 mm (*see* Fig. 104).

The minimum height of its relief shall be 0.8 mm; a height between 1 mm and 1.5 mm is preferred (*see* Fig. 104).

The profile of the relief should be shaped as a rounded upside-down turned letter V.

B-24.2.12 *Braille*

Where an arrow is used in the tactile sign, a small arrow shall be provided for Braille readers.

On signs with multiple lines of text and characters, a semi-circular Braille locator on the left margin shall be horizontally aligned with the first line of Braille text.

Braille should be raised, domed and comfortable to touch. It should be located 8 mm below the bottom line of the text and be left justified.

Common alternative formats may be used to assist people with visual impairments who are best able to interpret information through hearing or touch. Embossed letters, raised pictograms and raised arrows are tactile features that may be incorporated into signs, which may be particularly helpful to persons with visual impairments.

B-24.2.13 *Tactile Symbols*

Tactile symbols applied on handrails, doors, maps or floor plans shall have a raised relief contour similar to tactile letters.

B-24.2.14 *Tactile Maps and Floor Plans*

Only essential information should be included on a tactile map or floor plan.

Tactile maps shall be angled between 20° and 30° from the horizontal for ease of reading, and the bottom edge shall be at a minimum height of 900 mm. The map should have a level of illumination between 350 lux and 450 lux, without glare.

The key should be located at the bottom of the map and left justified. The use of a recessed Braille locator on the left hand side should assist in locating the legend.

The map shall be orientated with the building.

B-24.2.15 *Information Displays*

If video and media information displays are used, they should be placed at a height according to **B-24.2.4** and their lettering, etc, should be in conformity with the recommendations above.

Glare from artificial and natural lighting on the screen shall be avoided by,

a) positioning the display or the screen out of direct light; or
b) shading the display or the screen.

A complementary audible information system should be provided.

B-24.2.16 *Graphical Symbols*

The international symbol of accessibility (*see* Fig. 105) shall be replicated consistently in all wheelchair signage. The preferred colour is navy blue with white lettering.

Graphical symbols should be used in conjunction with building signage system, wherever possible.

Graphical symbols shall be highly contrasted with a minimum difference in LRV of 70 points and properly illuminated. They shall be used on guides and directional signage (*see also* **B-24.3**).

Graphical symbols on directional and door signs should be tactile, and should be accompanied by raised lettering and Braille (*see* **B-24.2.13**). Signs above a height of 1 600 mm do not need to be tactile, nor to include raised lettering or Braille information.

The size of graphical symbols is dependent on the viewing distance (*D*). The minimum size of the inner outline of the frame of graphical symbols (s) can be derived from formula $s = 0.09\ D$, applicable for a viewing distance of 1 000 mm to 10 000 mm.

The following accessible graphical symbols shall be used to denote particular components of a facility. The following facilities for disabled persons shall be marked as:

a) Those relating to people with mobility impairments,
   1) car parking places (parking places, garages);
   2) access and entrances without steps to buildings, especially where they are not identical with the main entrance;
   3) accessible lifts, in cases where not all lifts are accessible; lifting platforms and similar mounting devices;

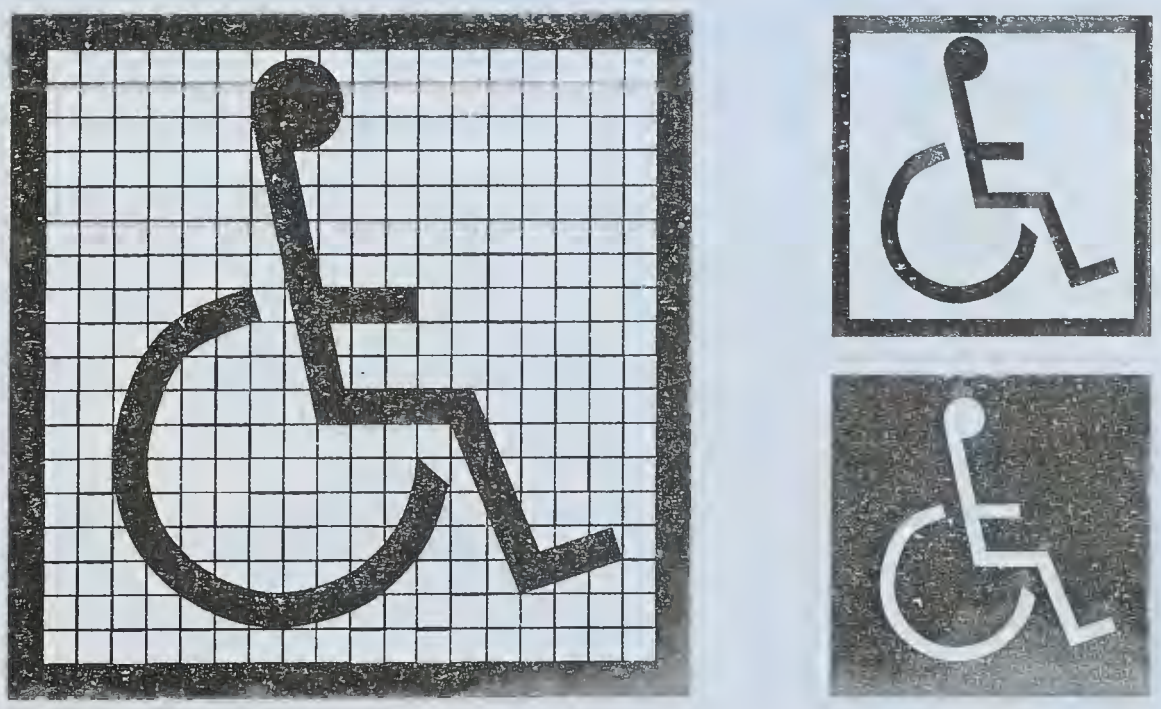

105A PROPORTIONS 105B DISPLAY CONDITIONS

FIG. 105 INTERNATIONAL SYMBOL OF ACCESSIBILITY

NOTE — This graphical symbol also indicate full accessibility or accessible toilets.

FIG. 106 ACCESSIBLE FACILITY OR ENTRANCE

FIG. 107 SLOPED OR RAMPED ACCESS

FIG. 108 TOILETS ACCESSIBLE, FEMALE AND MALE

FIG. 109 TOILETS ACCESSIBLE, FEMALE

FIG. 110 TOILETS ACCESSIBLE, MALE

FIG. 111 ACCESSIBLE LIFT

FIG. 112 ACCESSIBILITY, BLIND OR LOW VISION

FIG. 113 ACCESSIBILITY, LIMITED WALKING CAPABILITY

FIG. 114 ACCESSIBILITY, ASSISTANCE DOG

FIG. 115 ACCESSIBILITY, HARD OF HEARING

FIG. 116 ACCESSIBILITY, PERSONAL ASSISTANT AVAILABLE

FIG. 117 ACCESSIBILITY, VISION IMPAIRED

4) accessible sanitary rooms;
5) wheelchair viewing spaces and accessible seating;
6) changing rooms; and
7) steps or hoists providing access to swimming pools.

b) Those relating to people with vision impairments: locations where audible and tactile information is provided.

c) Those relating to people with hearing impairments,
   1) telephones and emergency call facilities, equipped with sound amplification; and
   2) provision of an assistive listening system.

Some of the graphical symbols relevant to accessibility are shown in Figs. 106 to 118.

B-24.3 Visual Contrast

B-24.3.1 *General*

In order to facilitate orientation and to ensure safe use of an environment, adjacent surfaces, information and potential hazards shall provide a discernible visual contrast.

A minimum difference in LRV shall be provided in relation to the visual task in accordance with Table 11. Additionally, one of the two surfaces should have an LRV value of minimum 30 points for door furniture, 40 points for large area surfaces and 70 points for potential hazards and text information.

The minimum difference in the LRV shall be achieved and maintained throughout the life of the building elements. Deterioration and maintenance shall be considered at installation.

For lighting conditions lower than specified in this Code, the difference in LRVs should be higher.

NOTES

1 The LRV, sometimes also called the luminance reflectance value, or CIE Y value, is expressed on a scale of 0-100, with a value of 0 points for pure black and a value of 100 points for pure white.

2 The perception of visual contrast increases with better lighting conditions.

3 Reflections and glare from shiny surfaces can reduce visual contrast and can confuse people with vision impairments.

NOTE — Fig. 118 is a combination sign which combines a safety sign and one or more associated supplementary signs on the same rectangular carrier. The signs used in the figure are the following:

a) *Running man* (*centre of the combination sign*) — Emergency exit (right hand).
b) *Arrow* (*right*) — Supplementary arrow sign used with the emergency exit sign to indicate its location in the right direction.
c) *Supplementary sign* (*opposite to the arrow*) — Full accessibility or toilets accessible.

FIG. 118 ACCESSIBLE EMERGENCY EXIT ROUTE

Table 11 Minimum Difference in LRV According to the Visual Task

(*Clause* B-24.3.1)

Sl No.	Visual Task	Difference on the LRV Scale	Approximate Examples of Colour Contrasting
(1)	(2)	(3)	(4)
i)	Large surface areas (that is, walls, floors, doors, ceiling), elements and components to facilitate orientation (that is, handrails, switches and controls, tactile walking surface indicators, and visual indicators on glazed areas)	≥30 points	
ii)	Potential hazards and self contrasting markings (that is, visual indicator on steps) and text information (that is, signage)	≥70 points	

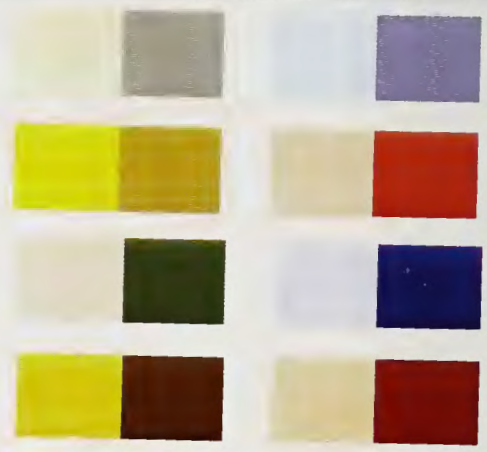

For door hardware (that is, the elements and components to facilitate opening and closing doors) a difference in LRV between the product and its background of at least 15 points and a minimum light reflectance value of 30 points for one of the two surfaces is acceptable.

NOTE — Door hardware is normally positioned at the same height on a door and is either on the left or right side. This makes the location of door hardware easier than other features. In addition, the three-dimensional features of door hardware create shadows and bright spots, which further enhance their location.

Floor patterns should have a visual contrast of less than 20 points difference on the LRV scale.

NOTE — Highly contrasted floor patterns can be perceived as differences in floor level, which may confuse people with vision impairments or cognition capacity. Highly contrasted floor patterns may trigger an attack of vertigo.

B-24.3.2 *Choice of Colours and Patterns*

Different colours should be used for identification of doors, different storeys or departments in a building to aid persons with impaired cognitive ability. The colours used to facilitate orientation shall also provide minimum difference in LRV according to **B-24.3.1**. Combinations of red tones and green tones should be avoided.

Different storeys should be marked with clearly defined large numbers relating to the floor (that is, '2' for the second floor, and so on) both in the stairwells to assist those evacuating and at the lift and stair lobbies on each level.

NOTE — Colour coding floors may not be practical from a long term maintenance perspective.

In case of signage and graphical symbols, contrasting colours shall be used to differentiate the figures from the background on the signboard. The colours of signboard shall also contrast with the surrounding surface so as to be clearly distinguishable (*see* **B-24.2.6**). Information from signs may be conveyed by the colour and brightness differentials between the letter and the background. For graphical symbols, it is preferable to use blue and white colours. Colours same as safety signs shall be avoided in other signs. Primarily red, yellow or green colour is used for safety signs. The colour combinations red/green and yellow/blue should not be used in order to avoid confusing persons who are colour blind. Use of the shades of the same colour in the sign and also use of more than 5 colours in a signage should be avoided.

A preferred schedule of colour contrast for signs from their background is given below:

Sl No.	Background	Sign Board	Legend
(1)	(2)	(3)	(4)
i)	Red brick or dark stone	White	Black, dark green or dark blue
ii)	Light brick or light stone	Black/dark	White or yellow
iii)	Whitewashed walls	Black/dark	White/Yellow
iv)	Green vegetation	White	Black, dark green or dark blue
v)	Back-lit sign	Black	White or yellow

B-25 MANAGEMENT AND MAINTENANCE ISSUES

B-25.1 Effective management of the built environment is essential to ensure that a building can be used by everyone. Management policies and procedures will be required to ensure that accessibility is maintained on an ongoing basis. The following management and maintenance issues, are important factors in ensuring that a building is easily accessed and used by disabled people.

B-25.2 External Issues

a) Keeping external routes, including steps and ramps, clean, unobstructed and free of surface water, dead leaves, lichen, debris, etc;

b) In car parking areas: ensuring that designated spaces are not being used by non-disabled motorists;

c) Where possible, allocating specific designated parking spaces to individual employees, marked by name or number;

d) Checking side-hung doors accompanying revolving doors to ensure they are not kept locked; and

e) Making available auxiliary aids such as portable ramps, and removing them when not in use.

B-25.3 Internal Issues

a) Ensuring that wheelchair spaces are available in seating areas;

b) Ensuring that staff understand the management issues relating to disabled people, including emergency procedures;

c) Ensuring that storage, planters, bins, etc, do not obstruct circulation space, WCs or lift call buttons;

d) Ensuring that cleaning and polishing does not produce a slippery surface;

e) Ensuring that trip hazards, such as at junctions between floor surfaces, are removed;

f) Ensuring access between moveable tables in refreshment areas;

g) Ensuring that in sanitary facilities, written instructions on the use of equipment is displayed beside each item;

h) Ensuring in sanitary facilities, that information is available on the type of sling connector and the types of sling that are compatible with their installed hoist and track;

j) Ensuring that a procedure is set up to respond to alarm calls from sanitary accommodation;

k) Ensuring that waterproof mattress covers can be made available for use in accessible bedrooms in non-domestic buildings;

m) Ensuring that, where floor sockets are provided (for example in meeting rooms), access to sockets is also available at desk level;

n) Ensuring that any temporary barriers that are used to channel customers to reception or serving points, and whose configuration needs to be changed frequently, have a semi-rigid top barrier (for example a spring-loaded band) which contrasts visually with the background against which it is seen; and

p) Ensuring that assistance is made available to carry trays where needed in refreshment areas.

B-25.4 Maintenance Issues

a) Maintaining doors, door closers and building hardware, including checking that the opening forces of self-closing doors are within acceptable limits;

b) Maintaining access control systems;

c) Checking floor surfaces, matting, surface-mounted carpets, etc, re-fixing to the floor where necessary, and replacing where damaged or worn (particularly at entrances to buildings);

d) Maintaining hearing enhancement systems;

e) Maintaining sanitary fittings, including checking that toilet seats are securely fixed, cleaning tap nozzles to ensure correct water flow, emptying and cleaning bins, and keeping equipment clean;

f) Ensuring that adjustable shower heads are lowered to be ready for the next user;

g) Ensuring that emergency assistance pull cords are kept fully extended and in working order at all times;

h) Checking the mountings of all grab bars, and the mechanism of drop-down bars, re-fixing or replacing, where necessary;

j) Servicing of all types of lifts and hoists;

k) Ensuring that facilities, such as lifts, hoists, etc, are in working order between servicing schedules, and providing alternative arrangements in case of facilities being out of order;

m) Maintaining ventilation and heating equipment;

n) Replacing defunct light bulbs and flickering fluorescent tubes quickly; and

p) Keeping windows, lamps and blinds clean to maximize lighting.

B-25.5 Communication Issues

a) Providing information on strobe lighting prior to entry;

b) Removing and/or changing signage as necessary, for example when departments relocate;

c) Providing accurate information on facilities prior to arrival;

d) Providing audio description services;

e) Providing all relevant literature, and reviewing/revising it when necessary;

f) Ensuring that a permanently manned position is available for the emergency lift telephone communications;

g) Updating maps of buildings following changes; and

h) Replacing signs correctly after decoration.

B-25.6 Policy Issues

a) Allocating and reviewing parking spaces;

b) Changing signs when departments move;

c) Reviewing the number of disabled people attending and needing facilities;

d) Establishing and running user groups;

e) Reviewing the number of instruments supporting infra-red systems;

f) Adopting a signage policy;

g) Having the loop position always manned in branches;

h) Providing portable ramps;

j) Arranging audits of journeys made by visitors;

k) Instructing accessibility audits;

m) Ensuring that services are provided when facilities such as lifts break down;

n) Ensuring that responsibilities are defined within the organization;

p) Ensuring that accessibility improvements are picked up whenever possible during maintenance and refurbishment work;

q) Reviewing and improving evacuation procedures;

r) Training of staff;

s) Reviewing all policies, procedures and practices;

t) Reviewing the provision of auxiliary aids; and

u) Considering the impact of background noise (for example music, equipment, ventilation) on people with a range of sensory conditions (hearing, vision, autism). This is especially important in areas where voice communication is necessary, such as reception, meeting and learning spaces.

ANNEX C

(*Clause* 14)

SPECIAL REQUIREMENTS FOR LOW INCOME HOUSING IN URBAN AREAS

C-1 GENERAL

These guidelines cover the planning and general building requirements of low income housing in urban areas, for houses having a maximum plinth area of 40 m^2 including future expansion. The requirement regarding layout planning of low income housing colonies are applicable to public and private agencies/ government bodies. The requirements on design and construction of buildings for low income housing in approved layouts are applicable to all private and public agencies.

C-2 PLANNING

C-2.1 Type of Development

The type of development for low income housing shall be plotted developments as row housing/flatted development as row housing or group housing on cluster pattern (*see* Annex D).

C-2.2 Layout Pattern

C-2.2.1 In the land to be developed, at least 75 percent of the plots may be of the size less than or up to 60 m^2

per dwelling unit in metropolitan towns and 100 m^2 in other towns and hill areas. Remaining 25 percent of the plots may be more than 60 m^2, however, no plot shall be more than 200 m^2. In case of group housing or flatted development at least 75 percent units should have a plinth area (excluding external circulation such as stairs, lifts, lobbies, etc) up to or not exceeding 40 m^2 including future expansion.

C-2.2.2 The mix of plot of different sizes should have a wide range to accommodate the need of lower income group. The project may include more than one site provided they are in the same neighbourhood.

C-2.2.3 The layout should generally conform to the following land use:

Sl No.	*Land Use*	*Percentage of Land Under Each Use*	
		General	Hill Area
(1)	(2)	(3)	(4)
i)	Saleable:		
	a) Residential	50, *Min*	35
	b) Work places, schools institutions, shops, community places, etc	20, *Max*	15
ii)	Non-saleable:		
	Roads, pedestrian paths, drains, public and semi-public open spaces	30, *Max*	50

NOTES

1 Any neighbourhood development should have provision for basic civic and community facilities, however, where such facilities are available in proximity the same could be considered and, in that case, the area under residential use could be increased correspondingly.

2 If land required under statutory provisions of master plan/development plan is proportionately higher but serves larger city needs, readjustment of the recommended land use pattern may be considered. Such provisions should, however, be carefully reviewed by the planning authorities to keep them to the barest minimum levels.

C-2.3 Plot Area

C-2.3.1 *Plot Size*

The minimum plot size with ground coverage not exceeding 75 percent, shall not be less than 40 m^2 in small and medium town and not less than 30 m^2 in metropolitan cities. Plot sizes below 30 m^2 but not less than 15 m^2 may be permitted in case of cluster planning, however, in such cases the ground coverage and FAR shall be 100 percent and 2, respectively (*see also* Annex D for special requirements for cluster planning for housing).

NOTES

1 In exceptional cases in metropolitan cities with population more than 1 million the size of plots may be brought down to 25 m^2 in cases of low income housing colonies located in congested areas as decided by the Authority. In mega cities it may be further reduced to 15 m^2. In such cases where plot size is below 25 m^2, only cluster planning or group housing may be adopted.

2 A minimum of 25 percent of the plot size shall be left open without adversely affecting light and ventilation for habitable spaces and toilet. It shall not be made mandatory to leave set back on any side.

C-2.3.2 *Minimum Frontage*

The minimum frontage of the plot shall be 3.6 m in width.

C-2.4 Density

C-2.4.1 The density norms for plotted development and mixed development shall be as follows:

Sl No.	*Type of Development*	*Range of Densities (Gross)*
(1)	(2)	(3)
i)	Plotted development	65-120 plots per hectare
ii)	Mixed development :	
	a) Small towns	75-100 dwelling units per hectare
	b) Cities	100-125 dwelling units per hectare
	c) Metropolitan cities	125-150 dwelling units per hectare

C-2.4.2 In case of developments with per dwelling unit covered area of 15 m^2, four storeyed walk ups without future incremental growth with maximum densities of 500 dwelling units per hectare shall be permissible. In case of four storeyed walk ups, having two roomed dwelling unit where one room is for future expansion, maximum density of 400 dwelling units per hectare shall be permissible.

C-2.5 Height of Building

The height of building shall not exceed 15 m.

NOTES

1 For buildings up to the height of 15 m, there is no need to provide lifts.

2 Housing for the low-income group shall preferably be up to a maximum of two storeys.

3 Buildings for housing beyond 15 m in height should be resorted to in exceptional circumstances and it should be governed by provisions laid down in this Code.

C-2.6 Cluster Planning

For size of open cluster and open space, set backs, vehicular access and pedestrian paths in cluster

planning, the provisions given in Annex D shall apply.

C-3 GENERAL BUILDING REQUIREMENTS

C-3.1 General

The requirements of parts of buildings shall be as given in **C-3.2** to **C-3.9**.

C-3.2 Plinth

The minimum height of plinth shall be regulated on the basis of environmental and topographical condition and higher plinth height may be required in areas prone to flooding.

C-3.3 Size of Room

C-3.3.1 *Habitable Room*

Every dwelling unit to be provided should have at least two habitable rooms. Even if one room house is provided initially it should be capable of adding a new second room in future. However, in case single room tenements are required to be provided where future additions are not possible, the carpet area of multipurpose single room should be at least 12.5 m^2. Such one room dwelling units with 12.5 m^2 carpet area of habitable space is permitted only in case of on-site rehabilitation of slum dwellers. In a house of two rooms, first room shall not be less than 9.0 m^2 with minimum width of 2.5 m and second room shall not be less than 6.5 m^2 with a minimum width of 2.1 m provided the total area of both the rooms is not less than 15.5 m^2. In incremental housing the bigger room shall always be the first room.

C-3.3.1.1 To facilitate incremental housing in case of flatted development or otherwise, habitable space at mezzanine level may be permitted. The minimum size of such a mezzanine floor should not be lesser than 6.5 m^2 and such a floor should occupy not more than 50 percent of the room area of which it is a part. Such a mezzanine floor should have appropriate openings to facilitate light and ventilation as per **C-3.6**. Minimum clear height below and above the mezzanine floor should be 2.4 m and 2.1 m, respectively.

As far as possible mezzanine floor should have direct ventilation from the external face of the building. Where this is not possible ventilation through main room may be allowed provided total area of openings in the main room is provided taking into consideration area of mezzanine floor.

Such mezzanine floor may be accessible through the main room by a ladder, whose minimum angle with vertical plane should be 22.5°. Height of the riser should be less than 250 mm.

C-3.3.2 *Water-Closet/Bath Room*

a) The size of independent water-closet shall be 0.90 m^2 with minimum width of 0.9 m;

b) The size of independent bath room shall be 1.20 m^2 with a minimum width of 1.0 m; and

c) The size of combined bath room and water-closet shall be 1.80 m^2 with minimum width of 1.0 m.

C-3.3.3 *Kitchen*

The size of a cooking alcove serving as cooking space shall not be less than 2.4 m^2 with a minimum width of 1.2 m. The size of individual kitchen provided in a two-roomed house shall not be less than 3.3 m^2 with a minimum width of 1.5 m.

C-3.3.4 *Balcony*

The minimum width of individual balcony, where provided, shall be 0.9 m and shall not be more than 1.2 m and it shall not project beyond the plot line and on roads or pathway.

C-3.4 Basement

No basement floor shall be allowed.

C-3.5 Minimum Height

The minimum height of rooms/spaces shall be as follows:

a) Habitable room : 2.6 m
b) Kitchen : 2.6 m
c) Bath/water-closet : 2.1 m
d) Corridor : 2.1 m

C-3.5.1 In the case of sloping roofs, the average height of roof for habitable rooms shall be 2.6 m and the minimum height at eaves shall be 2.0 m.

C-3.6 Lighting and Ventilation

The openings through windows, ventilators and other openings for lighting and ventilation shall be in accordance with **20.1.2**.

NOTE — The windows and other openings shall abut onto open spaces either through areas left open within the plot or the front, side and rear spaces provided in the layouts which shall be deemed to be sufficient for light and ventilation purposes. Wherever, ventilation/lighting is provided by means of *Jali* or grill of any material, total area of openings shall be calculated excluding solid portion of the *Jali* or grill.

C-3.7 Stairs

The following criteria shall be adopted for internal individual staircase:

a) *Minimum clear width*:
   1) 2 storeyed — straight : 0.60 m
   2) 2 storeyed — winding : 0.75 m

3) 3 or more storeyed — straight : 0.75 m

4) 3 or more storeyed — winding : 0.90 m

b) *Riser* : 200 mm, *Max*

c) *Tread*

1) 2 storeyed : 225 mm, *Min* (*see* Note)

2) 3 storeyed or more : 250 mm, *Min*

NOTE — This could be reduced to 200 mm as the clear tread between perpends, with possibility of open riser as well as nosing and inclined riser to have an effective tread of 225 mm.

d) *Head room* — The minimum clear head room shall be 2.1 m.

C-3.8 Circulation Area

The circulation area on any floor including staircase, shall not exceed 8 m^2/dwelling unit.

C-3.9 Water Seal Latrine

No building plan shall be approved and no building shall be deemed to have been completed and fit for human occupation unless provision is made for water seal latrine. No dry latrine shall be allowed. Water seal latrines may also be provided on the basis of community toilets or shared toilets as per the recommendation given in good practice [3(9)].

Where leaching pits are used, it should be constructed within the premises of the households as it would be economical as well as facilitate their cleaning. However, where, due to space constraint, construction of pits within the premises may not be possible, pits may be constructed in places like lanes, streets and roads.

In case the pit is located under the road, street or foot path, the inverted level of the pipe connecting the latrine pan with the pit shall be at least 1.1 m below ground level or below the bottom of the water main existing within adistance of 3 m from the pits whichever is more. Construction of such pits may be in accordance with good practice [3(10)].

The water seal latrine should be properly maintained and kept in sanitary condition by the owner or the occupier. The contents of the septic tanks, soak pits, leach pits, etc, should be periodically emptied.

The leach pits should be cleaned only after 2 years of their being put out of service after they were full.

C-4 ROADS AND PATHWAYS

The area under roads and path-ways in such housing projects should normally not exceed 20 percent of the total land area of the project.

Access to the dwelling units, particularly where motorized vehicles are not normally expected should be by means of paved footpaths with a right of way of 6 m and a pathway of 2 m only. The right of way should be adequate to allow for the plying of emergency vehicles and also for road side drains and plantation.

Where pedestrian pathways are not meant for motorable access to the minimum. right of way of such pedestrian pathway shall be 3 m. Where houses are accessible from one side only pathway may be 2 m wide. The maximum length of such pathways should not be more than 60 m.

C-5 OTHER REQUIREMENTS

C-5.1 Requirements of fire safety, structural design, building services and plumbing services shall be as specified in the Code.

C-5.2 One water tap per dwelling unit may be provided, where adequate drinking water supply is available. If supply is inadequate, public hydrants shall be provided. In the absence of piped water supply, hand pumps may be used for provision of water supply.

C-5.3 Recognizing the need for informal use of space for shopping and informal occupation like road side repairs, *Pan* shops, etc, it is suggested that about ¼ of the total shopping area in a layout should be reserved for such informal uses tocater to the needs of low income families.

C-5.4 The infrastructural services shall be provided before the plots are handed over to individual owners.

C-6 SITE AND SERVICES SCHEMES

C-6.1 The developed plot sizes shall be as per **C-2.3.1**. Services should be laid by the agency concerned as per the provisions of the Code. In so far as roads and pathways are concerned, they should be in line with **C-4**.

C-6.2 Site and services schemes should provide for the following:

a) Complete infrastructural needs for a permanent housing, on the periphery of individual plot or a group/cluster plots;

b) A service sanitary core in the plot;

c) A skeletal structure of columns and roof or a developed plinth; and

d) Permission to allow temporary construction on the plot.

While provisions in (a) and (d) are essential for site and services projects, recommendations in (b) and (c) are additional provisions depending upon affordability.

ANNEX D

(*Clause* 15)

SPECIAL REQUIREMENTS OF CLUSTER PLANNING FOR HOUSING

D-1 GENERAL

These guidelines cover planning and building requirements of housing developed as clusters. These requirements are applicable to all housing projects taken up by public, private or cooperative agencies.

D-2 PLANNING

D-2.1 Plot Size

The minimum plot size permissible shall be 15 m^2 with 100 percent ground coverage and an FAR of 2. 100 percent ground coverage and FAR of 2 will be applicable up to plot size of 25 m^2. For plot sizes beyond 25 m^2, provision in accordance with good practice [3(3)] shall be applicable.

D-2.2 Plot/Plinth Area for Slum Resettlement on Same Site

In case of slum resettlement on the same site, minimum area may be reduced to 12.5 m^2 with potential for adding another 12.5 m^2 on first floor with an internal staircase.

D-2.3 Group Housing

Group housing may be permitted within cluster housing concept. However, dwelling units with plinth areas up to 20 m^2 should have scope for adding a habitable room. Group housing in a cluster should not be more than 15 m in height.

D-2.4 Size of Cluster

In ground and one storeyed structures not more than 20 houses should be grouped in a cluster. Clusters with more dwelling units may create problems relating to identity, encroachment and maintenance.

D-2.5 Size of Cluster Open Space

Minimum dimensions of open spaces shall be not less than 6 m or 3/4th of the height of buildings along the cluster open space, whichever is higher. The area of such cluster court shall not be less than 36 m^2. Group housing around a cluster open space should not be normally more than 15 m in height. Maximum cluster courtyard width and breadth shall be 13 m.

D-2.6 Setbacks

No setbacks are needed from the edges of cluster as pedestrian/vehicular access roads surrounding the cluster.

D-2.7 Right to Build in Sky

Pedestrian paths and vehicular access roads to clusters separating two adjacent clusters may be bridged to provide additional dwelling units. While bridging the pedestrian path way minimum clearance should be one storey height, length of such bridging should be not more than two dwelling units. While bridging the vehicular access roads minimum clearance should be 6 m.

D-2.8 Vehicular Access

A right of way of at least 6 m width should be provided up to the entrance to the cluster to facilitate emergency vehicle movement up to cluster.

D-2.9 Pedestrian Paths

Minimum width of pedestrian paths shall be 3 m.

D-2.10 Width of Access Between Two Clusters

Built area of dwelling unit within cluster shall have no setbacks from the path or road, space. Hence, the height of the building along the pathway or roads shall be not less than 60 percent of the height of the adjacent building subject to minimum of 3 m in case of pathway and 6 m in case of vehicular access.

D-2.11 Density

Cluster planning methodologies result in higher densities with low rise structures. With per dwelling unit covered area of 15 m^2 densities of 500 dwelling units per hectare (net) shall be permissible. Densities higher than this should not be allowed.

D-2.12 Group Toilet

Cluster housing for economically weaker section families may have group toilets at the rate of one water-closet, one bath and a washing place for three families. These shall not be community toilets, as keys to these toilets shall be only with these three families, making them solely responsible for the maintenance and upkeep of these toilets.

D-3 OTHER REQUIREMENTS

D-3.1 Requirements of Building Design

With the exception of clauses mentioned above, requirements of building will be governed by the provision of this Code and good practice [3(3)].

D-3.2 Requirements of fire safety, structural design, building services and plumbing services shall be as specified in this Code.

ANNEX E

(*Clause* 16)

SPECIAL REQUIREMENTS FOR LOW INCOME HABITAT PLANNING IN RURAL AREAS

E-1 GENERAL

These guidelines cover planning and general building requirements for low-income houses having a maximum built-up area of 40 m^2 including future expansion, built on notified (as notified by the State Governments) rural areas. The provisions on layout planning of low-income housing colonies in rural areas are applicable to public and private agencies/government bodies. The provisions of this Guide on design and construction of buildings for low income housing in approved layouts are applicable to all private and public agencies.

E-2 SETTLEMENT AND ENVIRONMENT PLANNING

While planning for rural settlements the following factors shall be taken into consideration:

a) Eco-system and biodiversity.

b) Topography with its direct effect on climate, likelihood of natural disasters, natural drainage, etc.

c) Identity of the place rooted in its culture and heritage.

d) Nearness and connectivity with nearby urban centres.

e) Occupation related requirements.

f) Water management.

g) Waste management.

h) Land tenure.

j) Site selected shall be conveniently approachable and suitably developed and shall not be subjected to water logging/flooding.

k) Plot size : 80 m^2, *Min*

m) Density (Gross) : 60 plots per hectare, *Max*

n) Minimum frontage : 6 m

p) Ground coverage : 33 percent (subject to a maximum of 50 percent)

q) Floor area ratio (FAR) : 2, *Max*

r) Open spaces : 1.21 hectare open space for a village with 200 houses

s) Facilities like branch of cooperative bank, a fertilizer depot, a veterinary hospital, market place and a branch of the cooperative consumer store besides facilities for educational and health care should be available within a maximum distance of 5 km from any settlement.

t) Proposed road hierarchy:

Sl No.	*Road Type*	*Road Description*	*Road Width* m	*Function/ Remarks*
(1)	(2)	(3)	(4)	(5)
i)	R1	Road which connects village to nearby areas	9	Widest road
ii)	R2	Road which take major traffic to the village	6	Main village roads with drain on both sides to facilitate drainage system of the village
iii)	R3	Internal village road	4.5	Other village roads
iv)	R4	Internal village road	3	Village lanes

E-3 GENERAL BUILDING REQUIREMENTS (HOMESTEAD)

E-3.1 General

The requirements of parts of buildings shall be as given in **E-3.2** to **E-3.7**.

E-3.2 Plinth

The minimum height of plinth shall be regulated on the basis of environmental and topographical condition and higher plinth height may be required in areas prone to flooding.

E-3.3 Size of Room

E-3.3.1 *Habitable Room*

Every dwelling unit to be provided should have at least two habitable rooms. Even if one room house is provided initially it should be capable of adding a new second room in future. In a house of two rooms, first room shall not be less than 9.0 m^2. with minimum width of 2.5 m and second room shall not be less than 6.5 m^2 with a minimum width of 2.1 m provided the total area of both the rooms is not less than 15.5 m^2. In incremental housing the bigger room shall always be the first room.

E-3.3.1.1 To facilitate incremental housing in case of flatted development or otherwise, habitable space at mezzanine level may be permitted. The minimum size of such a mezzanine floor should not be lesser than 6.5 m^2 and such a floor should occupy not more than 50 percent of the room area of which it is a part. Such a mezzanine floor should have appropriate openings to facilitate light and ventilation as per **E-3.5**. Minimum clear height below and above the mezzanine floor should be 2.4 m and 2.1 m, respectively.

As far as possible mezzanine floor should have direct ventilation from the external face of the building. Where this is not possible ventilation through main room may be allowed provided total area of openings in the main room is provided taking into consideration area of mezzanine floor.

Such mezzanine floor may be accessible through the main room by a ladder, whose minimum angle with vertical plane should be 22.5°. Height of the riser should be less than 250 mm.

E-3.3.2 *Water-Closet/Bath Room*

a) The size of independent water-closet shall be 0.9 m^2; with minimum width of 900 mm.

b) The size of independent bath room shall be 1.2 m^2 with minimum width of 1 m, and

c) The size of combined bath and water-closet shall be 1.8 m^2 with minimum width of 1 m.

E-3.3.3 *Kitchen*

The size of a cooking alcove serving as cooking space shall not be less than 2.4 m^2 with a minimum width of 1.2 m. The size of individual kitchen shall not be less than 3.3 m^2 with a minimum width of 1.5 m. Semi-open spaces with low walls and roof may also be provided for cooking in areas where such provision is suitable with respect to climatic comfort. Provision for smokeless *Chullha* shall be made in all kitchens considering fuel efficiency and health hazard due to smoke inhalation.

E-3.3.4 *Balcony*

The minimum width of individual balcony, where provided, shall be 0.9 m. and shall not be more than 1.2 m and it shall not project beyond the plot line and on roads or pathway.

E-3.4 Minimum Height

The minimum height of rooms/spaces shall be as follows:

a) Habitable room : 2.75 m

b) Kitchen : 2.6 m

c) Bath/Water-closet : 2.2 m

d) Corridor : 2.1 m

E-3.4.1 In the case of sloping roofs, the average height of roof for habitable rooms shall be 2.75 m and the minimum height at eaves shall be 2.10 m.

E-3.5 Lighting and Ventilation

The openings through windows, ventilators and other openings for lighting and ventilation shall be as per in accordance with **20.1.2**.

NOTE — The windows and other openings shall abut onto open spaces either through areas left open within the plot or the front, side and rear spaces provided in the layouts which shall be deemed to be sufficient for light and ventilation purposes. Wherever ventilation/lighting is provided by means of *Jali* or grill of any material, total area of openings shall be calculated excluding solid portion of the *Jali* or grill.

E-3.6 Stairs

The following criteria shall be adopted for internal individual staircase:

a) *Minimum width*:

1) 2 storeyed-straight : 0.60 m

2) 2 storeyed-winding : 0.75 m

3) 3 or more storeyed straight : 0.75 m

4) 3 or more storeyed winding : 0.90 m

b) *Riser* : 200 mm, *Max*

c) *Tread*:

1) 2 storeyed : 225 mm, *Min* (*See* Note)

2) 3 storeyed or more : 250 mm, *Min*

NOTE — This can be reduced to 200 mm as the clear tread between perpends, with possibility of open riser as well as nosing and inclined riser to have an effective tread of 225 mm.

E-3.7 Water Seal Latrine

No building plan shall be approved and no building shall be deemed to have been completed and fit for human occupation unless provision is made for water seal latrine. No dry latrine shall be allowed. Water seal latrines may also be provide on the basis of community toilets or shared toilets as per the recommendation given in good practice [3(9)].

Where leaching pits are used, it should be constructed within the premises of the households as it would be economical as well as facilitate their cleaning. However, where, due to space constraint, construction of pits within the premises may not be possible, pits may be constructed in places like lanes, streets and roads.

In case the pit is located under the road, street or foot path, the inverted level of the pipe connecting the latrine pan with the pit shall be at least 1.1 m below ground level or below the bottom of the water main existing within a distance of 3 m from the pits whichever is

more. Construction of such pits, may be in accordance with good practice [3(10)].

The water seal latrine should be properly maintained and kept in sanitary condition by the owner or the occupier. The contents of the septic tanks, soak pits, leach pits, etc, should be periodically emptied.

The leach pits should be cleaned only after 2 years of their being put out of service after they were full.

Location of sanitary facility either as part of the house or separately shall be decided on the basis of felt perceptions.

E-3.8 The house site shall provide space for storage of food grains and keeping cattle. A manure pit having a minimum area of 1.0 m^2 shall also be catered for. This will take care of composting of biodegradable waste.

E-4 OTHER REQUIREMENTS

E-4.1 Requirements of fire safety, structural design, building services and plumbing services shall be as specified in relevant parts of the Code.

E-4.2 One water tap per dwelling unit may be provided, where adequate drinking water supply is available. If supply is inadequate, public hydrants shall be provided. In the absence of piped water supply, hand pumps may be used for provision of water supply.

E-4.3 Drainage System

E-4.3.1 Water from drains shall be connected to village ponds and appropriate eco-friendly methods like growing of duck weed plants shall be adopted to treat waste water.

E-4.3.2 This treated water may be used for irrigation and agriculture.

E-4.4 Appropriate methods (namely conservation, ground water recharging, rain water harvesting, etc) should be employed to ensure effective water management.

E-4.5 Community Facilities

E-4.5.1 A community hall/*Baraat Ghar* shall be established.

E-4.5.2 Rural development centre shall include *Panchayat Ghar*, a *Mahila Kendra* that may also serve as a vocational training centre.

E-4.5.3 School, health centre, post office, police post, shopping, work sheds for the artisans, telephone facilities, etc, should also be established.

E-4.6 The use (to the extent possible) of locally available building materials and cost effective substitutes for scarce building materials should be deployed. Appropriate technology inputs shall be introduced for improving the local materials or conventional or traditional practices for improved efficiency.

E-4.7 The concept of 'aided self-help' shall be ensured for active participation of the prospective users and association in the construction and development of dwelling units and other community building.

E-4.8 The special needs of women headed households/ single and working women/woman in difficult circumstances should be addressed. The specific requirement of women in terms of providing necessary facilities in homes to lessen their drudgery would be given sufficient attention.

E-4.9 Protecting and promoting our cultural heritage, architecture and traditional skills should be given due importance.

ANNEX F

(*Clause* 17)

SPECIAL REQUIREMENTS FOR DEVELOPMENT PLANNING IN HILLY AREAS

F-1 GENERAL

F-1.1 These guidelines provides requirements relating to development planning and design of buildings in hilly areas. Any area above 600 m in height from mean sea level may be classified as hilly, or any area with average slope of 30° may also be classified as hilly, considering the sensitive and fragile ecosystem of hills and mountains. However, the State Governments may identify and notify areas to be covered under 'Hilly Area', which need to be dealt with special consideration, when developmental activities are taken up.

F-1.2 Strategies for Development in Hilly Areas

Hilly areas have one of the most fragile ecosystems, which need to be conserved. Therefore planning and development strategies for hilly areas shall have to be designed with added sensitivity and stress on integrated development. The development approach shall comprise sound land use planning and settlement planning. Following strategies may be adopted for an integrated planning approach for conservation, preservation and planned development in hilly areas.

a) *Strategy 1: Land Conservation and Optimization*

1) *Environment inventory/impact assessment* — For planning of the new settlements or working out the strategies for the growth of the existing settlements, it is necessary to conduct detailed environmental inventory/impact assessment. The inventory would involve geological investigations, slope analysis, soil, flora and fauna analysis, climatic inventories, vulnerability to natural disasters (such as earthquakes, landslides, floods etc), etc. In addition to this the aesthetic factors, cultural, architectural and historical heritage, scenic/landscape value shall also be taken into consideration.

2) *Identification of developable area* — Identification and quantification of developable area is done by deducting the natural ecological area from the entire township jurisdiction area. Jurisdiction may be large to control the surrounding areas. The classification of land uses should be given only for developable area, while the rest of the ecological area shall be for conservation or restoration.

   Hill Town Developable Area = (Hill town jurisdiction area – Natural Ecological Area)

3) *Land use optimization* — Keeping in view the scarcity of good buildable land and also the high cost of the construction, it is necessary to optimize the use of land by calculation of carrying capacity and land suitability analysis. Sustainable building approach should be adopted, such as use of cost effective and appropriate building materials and technologies.

b) *Strategy 2: Sustainable Development based on Watershed Management*

A watershed, also called a drainage basin or catchment area, is defined as an area in which all water flowing into, goes to a common outlet. People and livestock are the integral part of watershed and their activities affect the productive status of watersheds and *vice-versa*. From the hydrological point of view, the different phases of hydrological cycle in a watershed are dependent on the various natural features and human activities. In hilly areas or where intensive agriculture development is planned, the size of watershed preferred is relatively small. Watershed managements, that is, river basin management also is important in the context of regional planning both in terms of, as a source of water and sources of disaster risk like flood, etc. Efforts shall be made to achieve a balance between beneficiary oriented and infrastructural development programmes, keeping in view the vital importance of ecological restoration and conservation. This may be achieved through,

1) better water and land use and control of soil erosion through watershed management;
2) afforestation, silvi pasture development and replacement of annual crops with perennial shrubs and trees and plantation crops in steep slopes and development of other high value low volume crops linked with processing and marketing; and
3) rural and small industries and electronic

and precision instruments industries may also be promoted taking advantage of favourable weather conditions.

To understand watershed system, data from latest and authentic sources should be collected, simulation models may be used to analyze (drainage pattern modification) scenarios before Development Plan Preparation and formulating building regulations.

F-1.3 In hill areas, the space standards are affected by the following and therefore these factors should be considered while setting norms in such areas:

a) Exposure to sunlight, degree of slopes and accessibility in the form of distance travelled;
b) Minimum needs of the people and the conservation principle;
c) Flexibility in norms and standards to accommodate conditions guided by difficult hill terrain and its geology;
d) Work place and residence relationship;
e) Energy needs;
f) Alternative mode of transportation communication network;
g) Communication network; and
h) Mobile and emergency facilities.

F-2 LAND USE PLANNING

The following land use structure shall be adopted in Development Planning in Hilly areas:

Sl No.	*Land Use*	*Percentage of Developed Area*		
		Small Towns	Medium Towns	Large Cities
(1)	(2)	(3)	(4)	(5)
i)	Residential	50-55	48-52	45-48
ii)	Commercial	2-3	2-3	4-5
iii)	Industrial	3-4	4-5	4-6
iv)	Public and semi-public	8-10	8-10	12-14
v)	Recreational	15-18	15-18	16-18
vi)	Transport and commerce	5-6	5-6	6-8
vii)	Ecological	Balance	Balance	Balance

NOTE — The ecological area (non -developable area) given in the table above for hill towns is applicable for the hill town jurisdiction developable area only. Hill town developable area shall be considered as area under hill town jurisdiction minus natural ecological area. Where non -developable area is defined as earthquake/landslide prone, cliffs and environmentally hazardous area, areas adjacent to faul t lines, areas with slope higher than 45°, flood plain and areas adjacent to major drainage lines for general guidance and all environmentally sensitive areas. Land suitability analysis should be an important tool in first principal approach for deciding o n land use proportions.

F-3 OPEN SPACES

The following norms shall be adopted in development planning in hilly areas:

Sl No.	*Type*	*Area Range* ha	*Area per 1 000 Population* ha	*Remarks*
(1)	(2)	(3)	(4)	(5)
i)	Tot lot	0.03-0.05	—	Minimum width 15 m
ii)	Playground	0.50-1.00	0.12 to 0.20	One for every 5 000 may be combined with schools
iii)	Parks	1.20-2.00	0.12 to 0.20	One for every 10 000 population
iv)	City parks/playgrounds/ *Maidan*/exhibition grounds/ cultural gathering grounds	—	0.12 to 0.20	For the entire town at one or more sites, depending upon design and space availability
v)	Botanical garden	10-20	—	One for every town
vi)	Recreational complex including zoo	10-12	—	One for every settlement with tourist potential

F-4 ROADS AND PATHS

F-4.1 Street orientation shall preferably be east-west to allow for maximum south sun to enter the buildings. The street shall be wide enough to ensure that the buildings on one side do not shade those on the other side.

F-4.2 The following road widths shall be adopted for urban roads in hilly areas:

Sl No.	*Road Type*	*Width* m		
		Open Areas	Built-up Areas	Plains
(1)	(2)	(3)	(4)	(5)
i)	Arterial road	18-24	15-18	50-60
ii)	Sub-arterial road	15-18	12-15	30-40
iii)	Collector road	9-12	7.5-9	20-30
iv)	Local street	4.5-6	3-6	10-20
v)	Loop street (maximum length = 500 m)	4.5	4.5	9
vi)	*Cul-de-sac* (maximum length = 500 m)	4.5	4.5	7.5
vii)	Pedestrian path	1.5-2.5	1-1.5	1.5-4.5

F-4.3 Hill Road Manual (IRC:SP:48-1998), a publication of the Indian Roads Congress shall be referred to for detailed guidelines for planning roads in hilly areas.

F-5 COMMUNITY FACILITIES AND SERVICES

The following minimum norms shall be adopted for community facilities and services in hilly areas:

Sl No.	*Type*	*Population*	*Distance between Two Facilities* km	*Area Range* *ha*
(1)	(2)	(3)	(4)	(5)
i)	*Educational facilities*:			
	a) Primary school	4 000	1-2	0.20 to 0.30
	b) Secondary school (10 + 2)	15 000	5-7	0.30 to 0.50
	c) Industrial training centre	—	8-12	0.30 to 0.60
	d) College	30 000	8-12	2.00 to 3.00
	e) Professional college	30 000	8-12	1.00 to 1.50
	f) University	50 000	8-12	2.00 to 3.00
ii)	*Health*:			
	a) Dispensary	2 500	2-4	0.015 to 0.020
	b) Health sub-centre	3 000	2-4	0.025 to 0.067
	c) Primary health centre (25-50 beds)	20 000	16-20	0.105 to 0.210
	d) Hospital (200-250 beds)	80 000	16-20	0.840 to 2.100
	e) Veterinary centre	1 000	16-20	0.050 to 0.100
	f) Family welfare centre	5 000	5-10	0.025 to 0.050
	g) Maternity home	15 000	5-10	0.025 to 0.050
	h) Nursing home	15 000	5-10	0.050 to 0.075
iii)	*Other facilities*:			
	a) Community welfare centre	16 000	5-7	0.10 to 0.15
	b) Local convenience shopping	10 000	2-4	0.50 to 0.10
	c) Milk booth	10 000	2-4	0.04
	d) Banquet hall	10 000	5-10	0.10
	e) Religious buildings	10 000	5-10	0.10
	f) Cremation ground	10 000	5-10	0.20
	g) Informal bazaar	15 000	5-10	0.10 to 0.20

(1)	(2)	(3)	(4)	(5)
iv)	*Services*:			
a)	Fire station	50 000	—	0.30 to 0.80
b)	General post office	50 000	10-15	0.20 to 0.40
c)	Post office	10 000	5-7	0.10 to 0.15
d)	Rural post office	2 000	2-4	—
e)	Rural post office	1 000	1-2	0.025 to 0.050
f)	Bank (tribal areas)	10 000	16-20	0.100 to 0.150
g)	Telephone exchange	50 000	10-15	0.20 to 0.40
h)	Electric sub-station (66 kV)		—	1.00
j)	Electric sub-station (11 kV)	—	—	0.05
k)	Police chowki	5 000	2-4	0.10
m)	Police station	15 000	5-10	0.50
n)	Disaster management centre	20 000	5-10	1.00
p)	LPG godown	As per requirement	—	0.15

F-6 OTHER ASPECTS FOR PLANNING FOR THE HILLY AREAS

F-6.1 Following aspects should also be considered while planning for land/building development in hilly areas:

a) The hillside with less than 30° slope are in general stable. Therefore, building sites (temporary or permanent) should in general be located on hillside with not more than 30°–45° slope. In areas where most of the land is above 30° slope, spatial regulations should control construction activity on slopes above 30°, provided that appropriate technology is used.

b) The maximum height of the building shall be fixed.

c) Flat land is normally not available in hilly regions. The houses are required to be constructed on partially sloping land made available by cut and fill. It shall be therefore necessary to protect the houses by building retaining walls/breast walls to avoid landslides occurring at time of earthquakes or heavy rains (*see* **F-7.4**).

d) Cut slopes with height less than 5 m or two to three storey heights of residential buildings are in general stable. For higher cut slopes, special investigation should be carried out and details of protection works should be worked out and implemented.

e) Site development in hilly regions consumes about 30 to 40 per cent of total cost of building complex, therefore the following investigations shall be done to obtain the following geotechnical parametres depending upon the size and complexity of the building project:

1) Type of soil rock, weathered or intact, dip of bedding planes, drainage conditions, shear planes, material between the joints, tension cracks, type of plantation, verticality of trunks of the trees, etc.

2) Cliff sides and spur faces need to be protected with appropriate technology including wire netting and/or blowing of RCC along the walls.

3) Thickness of overburden, nature of soil strata, details of soil matrix, etc.

4) Estimation of shear parametres of the in situ soil mass, which will govern the failure.

5) Drainage pattern of the area and permeability tests to observe the drainage conditions.

6) Specific slip zones in the area, if any.

f) Provisions for landslide hazard mitigation, seismic micro zonation and mitigation of liquefaction hazard should be integrated.

F-6.2 Additional Aspects for New Hill Towns

In addition to considerations given in **F-6.1**, following aspects should also be considered while planning for new hill towns:

a) The basic principles of hill architecture should be followed including use of local building materials, slanting roofs, seismic bands in structures, etc, so that they merge in cultural landscape of their regions.

b) Travelling time from nearest town to the new township should be at least 1 h or distance between the new township and the nearest town should be less than 20 km.

c) The new town should be self sufficient in infrastructure and its area should ideally not be less than 40 ha.

d) Provision of facilities for additional (and/or floating) population should be made.

F-7 GENERAL BUILDING REQUIREMENTS

F-7.1 General

The provisions contained in this Part shall apply excepting for the specific provisions given hereunder.

F-7.2 Siting

F-7.2.1 No house shall preferably be located closer than 1 m to another house.

F-7.2.2 No house shall be located closer than 10 m to a steep slope.

F-7.2.3 No house shall be built on a landfill or on the edge of a slope known to have been levelled.

F-7.2.4 Buildings in hills shall be clustered together to minimize the exposure to cold winds. Open spaces provided shall allow for maximum south sun.

F-7.2.5 Buildings shall be located on the south slope of a hill or mountain for better exposure to solar radiation. At the same time, exposure to cold winds may be minimized by locating the building on the leeward side.

F-7.2.6 A minimum clearance of 1.5 m should be provided between toe of boundary wall and building wall.

F-7.3 Passive Systems for Climatic Control

F-7.3.1 Appropriate solar passive methods, such as orientation, double-glazing, trombe walls and solar collectors, shall be adopted to achieve climatic comfort with little use of conventional energy.

F-7.3.2 Care shall be taken in siting and design of buildings to provide passive controls to modify the effect of cold/strong winds.

F-7.4 The houses constructed on sloping land shall be protected by building retaining walls/breast walls [*see* good practices 3(11)] to avoid landslides occurring at time of earthquakes or heavy rains.

F-7.5 Maximum height of plinth level shall be 2.00 m.

F-7.6 On the uphill side of the building on a sloping site, the natural flow of the water shall be diverted away from the foundations.

The slope of ground all around building should be not less than 1:50, built in such a way that rain water does not find way to percolate in ground excessively and moves away quickly to surface drains or away on adjoining hill surface towards natural streams.

A minimum of 0.75 m wide apron should be provided all around the building to prevent entry of water into foundation.

F-7.7 Stepped terrace development and stepped storeyed building construction may be adopted for offices, schools and other building complexes because of following advantages.

a) It results in least hill cutting, disturbance to hill stability and also in least deforestation.

b) Cost of site development works, slope protection and other protection works is reduced considerably.

c) Least load comes on valley side, so danger of foundation failures is avoided.

F-7.8 Disaster Resistance

All necessary steps shall be taken in designing and building in hilly regions to achieve disaster resistance as per the relevant codes and Part 6 'Structural Design' of the Code. All natural disasters likely to affect the locality shall be taken into consideration namely earthquakes, cyclones, avalanches, flash floods, landslides, etc. For guidelines for selection of various landslide control methods for effective correction measures to avoid landslides in hill areas, reference shall be made to good practice [3(12)].

F-7.9 Drainage Facilities

Buildings to be provided with good drainage facilities to prevent excessive saturation of sub-surface formations. Construction should not obstruct existing surface drainage courses.

For guidelines relating to rainwater harvesting in hilly areas, reference shall be made to Part 9 'Plumbing Services (including Solid Waste Management), Section 2 Drainage and Sanitation' of the Code.

F-7.10 The shear walls shall be constructed on all the three sides of parking floor so that it is not a soft storey.

F-7.11 Reference shall also be made to good practice [3(13)] for guidelines relating to siting, design and selection of materials for construction of residential buildings in hilly areas.

F-8 SOLID WASTE MANAGEMENT FOR HILLY AREAS

Cities and towns located on hills shall have location specific methods evolved for final disposal of solid wastes by the concerned Authority. The municipal authority shall set up processing facilities for utilization of biodegradable organic wastes. The inert and non biodegradable waste shall be used for building roads or filling up of appropriate areas on hills. Because of constraints in finding adequate land in hilly areas, wastes not suitable for road laying or filling up shall be disposed of in specially designed landfills.

LIST OF STANDARDS

The following list records those standards which are acceptable as 'good practice' and 'accepted standards' in the fulfillment of the requirements of the Code. The latest version of a standard shall be adopted at the time of enforcement of the Code. The standards listed may be used by the Authority as a guide in conformance with the requirements of the referred clauses in the Code.

In the following list, the number appearing in the first column within parentheses indicates the number of the reference in this Part of the Code.

	IS No.	*Title*
(1)	3861 : 2002	Method of measurement of plinth, carpet and rentable areas of buildings (*second revision*)
(2)	4878 : 1986	Byelaws for construction of cinema buildings (*first revision*)
(3)	8888 (Part 1) : 1993	Guide for requirements of low income housing: Part 1 Urban area (*first revision*)
(4)	12933	Solar flat plate collector — Specification
	(Part 1) : 2003	Requirements (*second revision*)
	(Part 2) : 2003	Components (*second revision*)
	(Part 3) : 2003	Measuring instruments (*first revision*)
	(Part 5) : 2003	Test methods (*second revision*)
	12976 : 1990	Solar water heating systems — Code of practice
(5)	3792 : 1978	Guide for heat insulation of non-industrial buildings (*first revision*)
	11907 : 1986	Recommendations for calculation of solar radiation on buildings
(6)	10976 : 1993 ISO 6440 : 1985	Wheelchairs nomenclature, terms and definitions (*first revision*)
(7)	6571 : 1991	Rehabilitation equipment — Wheelchairs, non-folding, adult size, institutional model — Specification (*first revision*)
	7454 : 1991	Rehabilitation equipment — Wheelchairs, folding, adult size — Specification (*first revision*)
	8086 : 1991	Rehabilitation equipment — Wheelchairs, folding, junior size — Specification (*first revision*)
(8)	15330 : 2003	Installation and maintenance of lifts for handicapped persons — Code of practice
(9)	13727 : 1993	Guide for requirements of cluster planning for housing
(10)	12314 : 1987	Code of practice for sanitation for leaching pits for rural community
(11)	14458	Guidelines for retaining walls for hill area
	(Part 1) : 1998	Selection of type of wall
	(Part 2) : 1997	Design of retaining/breast walls
	(Part 3) : 1998	Construction of dry stone walls
(12)	14680 : 1999	Guidelines for landslide control
(13)	14804 : 2000	Guidelines for siting, design and selection of materials for residential buildings in hilly areas

NATIONAL BUILDING CODE OF INDIA

PART 4 FIRE AND LIFE SAFETY

BUREAU OF INDIAN STANDARDS

CONTENTS

FOREWORD ... 3

1 SCOPE . 7

2 TERMINOLOGY . 7

3 FIRE PREVENTION . [illegible]

4 LIFE SAFETY . 27

5 FIRE PROTECTION . [illegible]2

6 ADDITIONAL OCCUPANCY WISE REQUIREMENTS .. 58

ANNEX A CALORIFIC VALUES OF COMMON MATERIALS . 68

ANNEX B BROAD CLASSIFICATION OF INDUSTRIAL OCCUPANCIES IN TO DIFFERENT DEGREE OF HAZARD . . 69

ANNEX C AVAILABLE DATA REGARDING FIRE RESISTANCE RATING OF VARIOUS BUILDING COMPONENTS . [illegible]2

ANNEX D GUIDELINES FOR FIRE DRILL AND EVACUATION PROCEDURES FOR HIGH RISE BUILDINGS 81

ANNEX E ADDITIONAL REQUIREMENTS FOR HIGH RISE BUILDINGS .. 87

ANNEX F ATRIUM ... 89

ANNEX G COMMERCIAL KITCHENS ... 91

ANNEX H CAR PARKING FACILITIES ... 94

ANNEX J FIRE AND LIFE SAFETY REQUIREMENTS FOR METRO STATIONS ... 96

ANNEX K FIRE AND LIFE SAFETY REQUIREMENTS FOR METRO TRAINWAYS ...103

ANNEX M FIRE PROTECTION CONSIDERATIONS FOR VENTING IN INDUSTRIAL BUILDINGS ..106

LIST OF STANDARDS ..112

FOREWORD

This Code (Part 4) deals with safety from fire. It specifies the demarcation of fire zones, restrictions on construction of buildings in each fire zone, classification of buildings based on occupancy, types of building construction according to fire resistance of the structural and non-structural components and other restrictions and requirements necessary to minimise danger to life from fire, smoke, fumes or panic before the buildings can be evacuated. The Code recognizes that safety of life is more than a matter of means of egress and accordingly deals with various matters which are considered essential to the safety of life. The Code therefore covers provisions relating to means of egress covering various components thereof namely exit access, exit and exit discharge. It also covers provisions relating to fire protection of buildings through portable and fixed firefighting installations.

Fire protection techniques have to be based on the fire behaviour characteristics of different materials and structural elements of buildings. The activities pursued by the occupants of buildings must also be taken into consideration for assessing the extent of hazards, and method should then be devised by which the hazards could be minimised. An indefinite combination of variables is involved in the phenomenon of fire, all of which cannot be quantified. The requirements of this Code should, therefore, be taken as a guide and an engineering design approach should be adopted for ensuring a fire safe design for buildings. Depending upon the type and complexities in a building, qualified and trained fire protection engineers should be associated with the planning of buildings, so that adequate fire and life safety measures could be incorporated in the building design right from the beginning.

Absolute safety from fire is not attainable in practice. The objective of this Part is to specify measures that will provide that degree of safety from fire which can be reasonably achieved. The Code endeavours to avoid requirements that might involve unreasonable hardships or unnecessary inconvenience or interference with normal use and occupancy of buildings, but insists upon compliance with minimum standards of fire safety necessary for building occupants and users. For ensuring compliance of fire protection equipment/installations to the laid down quality requirements, it is desirable to use such equipment/installation duly certified under the BIS Certification Marks Scheme.

While providing guidelines for minimizing chances of occurrence of fire through passive fire protection measures, this Part does not intend to cover all aspects of general fire prevention including sources of ignition. Nor does it cover the prevention of accidental personal injuries during the course of normal occupancy of buildings.

This Part while recognizing that panic in a building on fire may be uncontrollable, deals with the potential panic hazard through measures designed to prevent the development of panic. Experience indicates that panic seldom develops even in the presence of potential danger, so long as occupants of buildings are moving towards exits which they can see within a reasonable distance and with no obstruction or undue congestion in the path of travel. However, any uncertainty as to the location or adequacy of means of egress, the presence of smoke or fumes and the stoppage of travel towards the exit, such as may occur when one person stumbles and falls on stairs, may be conducive to panic. Danger from panic is greater when a large number of people are trapped in a confined area particularly when people are not adequately guided towards egress and safety notifications are not implemented or practiced. Consideration towards announcements and annunciations needs to be given to guide the occupants to safe egress routes and to control panic during situation of distress.

Experience has shown that concealed spaces within a building, such as, space between ceiling and false ceiling, horizontal and vertical ducts and shafts, etc, tend to act as flues/tunnels during a fire. Provision should, therefore, be made to provide fire stopping within such spaces.

Nothing in this Part of the Code shall be construed to prohibit better types of building construction, more exits or otherwise safer conditions than the minimum requirements specified in this Part.

Compliance with this Part shall not be construed as eliminating or reducing the necessity for other provisions for safety of persons using a building or structure under normal occupancy conditions. Nor shall any provision of this

Part be construed as requiring or permitting any addition that maybe hazardous under normal occupancy conditions.

One of the major points brought out in this Part is the limitation of heights and areas of buildings based on fire safety of the occupants. Individual municipal corporations are free to alter Table 2 based on local conditions, but the ratios of areas as maintained in the table for different occupancies and types of construction shall be adhered to.

Advantage has been taken of the developments, particularly in fire resistance rating of materials, designating types of construction in a rational manner and relating the area limitations of different occupancies to different types of construction.

Halons (halogenated hydrocarbons) which exhibit exceptional firefighting and explosion prevention/suppression characteristics have been found to possess high ozone depleting potential. They come under Group II of Annex A of the Montreal Protocol on Substances that Deplete the Ozone Layer, the international environmental agreement for phasing out ozone depleting substances. Due to increasing evidence that the ozone layer is getting depleted at a faster rate than thought earlier, the Code takes into cognizance the need to promote use of halon alternatives as fire extinguishing media.

The first version of this Part was formulated in 1970 and was revised in 1983. Subsequently the first revision of this Part was modified in 1997 through Amendment No. 3 to 1983 version of the Code. This modified version of this Part included few tables for the fire resistance ratings of various building components, such as walls, columns, beams and floors. The requirements for wet riser, down-comer, automatic sprinkler installation, high velocity (10-15 m/s) water spray or foam generating system, etc, for buildings were modified. Annex giving guidelines for selection of fire detectors had been deleted and relevant Indian Standards on fire alarm system and smoke detectors had been referred. Also, an annex for determination of fire loads and flue load density for arriving at the classification of occupancy hazard and calorific values of some common materials were included. Annex for broad classification of industrial and non-industrial occupancies into low, moderate and high hazard had also been included.

The Code was then revised in 2005. In this revision, the significant modifications incorporated were: The text was divided into the following broad clauses: (a) *Fire prevention* — Covering aspects of fire prevention pertaining to design and construction of buildings on passive fire protection measures, also describing the various types of building materials and their fire rating; (b) *Life safety* — Covering life safety provisions in the event of fire and similar emergencies, also addressing construction and occupancy features that are necessary to minimise danger to life from fire, smoke, fumes or panic; (c) *Fire protection* — Covering the significant appurtenances and their related components and guidelines for selecting the correct type of equipment and installation meant for fire protection of the building, depending upon the classification and type of the building. Also, the classification of building based on occupancy was elaborated, wherein, starred hotels were covered as a new Subdivision A-6 under occupancy Group A Residential; heritage structures and archaeological monuments were covered under Subdivision D-3 occupancy Group D Assembly buildings; mixed assembly occupancies were covered as a new Subdivision D-6; underground elevated railways were covered as a new Subdivision D-7 under occupancy Group D Assembly buildings; and TV stations were covered under Subdivision E-5 of occupancy Group E Business buildings. Further, for the external stairs for exit requirements, the width and treads were increased to 1 250 mm and 250 mm, respectively; under the requirements for institutional buildings the clear width of all required exits which serve as egress from hospital or infirmary section was increased from 1.5 m to 2 m. Also, provision of patient-lift was included; and due cognizance of halon phase out programme was taken, while specifying provisions in this Part with respect to fire protection using fire extinguishers/systems.

Based on various comments received from time-to-time, an Amendment No. 2 relating to Part 4 of the 2005 version of the Code, was issued.

In this current revision, the following significant changes have been made:

General:

1) The scope of application of provisions of this Part of the Code for different occupancies has been clarified.

2) Definitions of various new terms have been included and definitions of some of the existing terms have been updated based on latest developments and use.

Fire Prevention:

3) Based on the experience in the use of the provisions of the Code in relation to various occupancies and

subdivision classification under various building occupancy types, the same has been reviewed and updated. Also, mixed occupancy and minor occupancy have been further clarified.

4) Table 1 on fire resistance ratings of structural and non-structural elements has been updated.

5) The provisions relating to fire separating walls, fire separating floors and fire partitions have been detailed.

6) Provisions of fire safety requirements of services shafts have been rationalized and updated.

7) A separate comprehensive clause on electrical power supply distribution for fire and life safety systems has been included.

8) Detailed clauses on air conditioning systems towards safety and smoke control integration have been provided.

9) Glass facade requirements have been detailed towards fire protection and smoke exhaust aspects.

10) A separate comprehensive clause on Fire Command Centre (FCC) has been introduced covering various requirements.

Life Safety:

11) The components of means of egress have been comprehensively brought out covering specific aspects relating to exit access, exit and exit discharge. The relationship of occupant load, exit width requirements and travel distances have also been duly detailed enabling efficient planning for enhanced life safety provisions. The table on capacity factors has been modified based on aspect of width per person approach used globally.

12) Requirement for displaying the occupancy load for assembly buildings and call centres, has been included.

13) The concept of firefighting shaft for safe and efficient use by the fire fighters to access the floor on fire and also allow egress/evacuation of the occupants with simultaneous use of refuge area used as staging of the occupants, have been well integrated, including in the annex for high rise buildings.

14) Aspects of compartmentation with fire barrier and its passive fire safety requirements have been detailed for respective occupancies.

15) Pressurization of exits and smoke extraction requirements for respective areas including car parking have been updated with an approach towards selecting alternative means therefor.

16) The clause on gas supply has been comprehensively updated.

17) The clause on fire detection and alarm system has been completely reviewed and updated as per the latest practices.

Fire Protection:

18) The table on minimum requirements for firefighting installations (erstwhile Table 23 and now Table 7) has been comprehensively updated.

19) Detailed provisions have been included on fire water storage, fire pump room, sprinkler system and various alternative fire suppression systems.

Additional Occupancy-wise Requirements

20) Concept of progressive evacuation in case of hospital buildings has been included in detail to ensure life safety of the inmates.

21) Provisions relating to requirement of refuge area have been updated including for D-6 occupancy and introduced for apartment buildings of height 60 m and above.

22) Separate provisions on atrium have been included in Annex F.

23) Detailed separate provisions have been included on commercial kitchens in Annex G.

24) Detailed separate provisions have been included on car parking facilities in Annex H.

25) Separate provisions on fire and life safety requirements for metro stations and metro trainways have been included in Annex J and Annex K, respectively.

For provisions relating to universal accessibility and barrier-free environment Part 3 'Development Control Rules and General Building Requirements' of the Code may be referred.

All standards cross-referred to in the main text of this Part, are subject to revision. The parties to agreement based on this Part are encouraged to investigate the possibility of applying the most recent editions of the standards.

For the purpose of deciding whether a particular requirement of this Part of the Code is complied with, the final value, observed or calculated, expressing the result of a test or analysis, shall be rounded off in accordance with IS 2 : 1960 'Rules for rounding off numerical values (*revised*)'. The number of significant places retained in the rounded off value should be the same as that of the specified value in this Part.

NATIONAL BUILDING CODE OF INDIA

PART 4 FIRE AND LIFE SAFETY

1 SCOPE

1.1 This Code (Part 4) covers the requirements for fire prevention, life safety in relation to fire and fire protection of buildings. This Code (Part 4) specifies occupancy-wise classification, constructional aspects, egress requirements and protection features that are necessary to minimise danger to life and property from fire.

1.2 The provisions of this Part are applicable to,

a) all high rise buildings; and

b) special buildings, those are,

1) hotel, educational, institutional, business, mercantile, industrial, storage, hazardous and mixed occupancies, where any of these buildings have floor area more than 500 m^2 on any one or more floors;

2) educational buildings having height 9 m and above;

3) institutional buildings having height 9 m and above;

4) all assembly buildings;

5) buildings, having area more than 300 m^2 of incidental assembly occupancy on any floor; and

6) buildings with two basements or more, or with one basement of area more than 500 m^2.

unless otherwise mentioned specifically in the provisions.

NOTE — The owner of the building and parties to agreement, may however, decide to apply the provisions of this Part to buildings other than those given above.

2 TERMINOLOGY

For the purpose of this Part, the following definitions shall apply.

2.1 Assisted Evacuation — Strategy that exists during which a designated person or persons provide assistance, during an emergency, to another person(s) to leave a building or a specific part of the built environment and to reach a final place of safety.

2.2 Atrium — A large-volume space created by a floor opening or series of floor openings connecting two or more stories that is covered at the top of the series of openings and is used for purposes other than an enclosed stairway; lifts hoist-way: an escalator opening: or as a utility shaft used for plumbing, electrical, air conditioning, or communications facilities.

2.3 Authorities Concerned — An organization, office, or individual responsible for enforcing the requirements of a code or standard, or for approving or accepting equipment, materials, an installation, or a procedure.

2.4 Automatic Fire Detection and Alarm System — A system comprising components and sub-systems required for automatically detecting smoke, heat or fire initiating an alarm and other actions as appropriate. This system also includes manually operated electronic fire alarm (MOEFA) system.

NOTE — MOEFA system (with or without automatic fire detection and alarm system) includes all or some of the components such as manual call stations (initiating an alarm for fire and other actions as required), talk-back system and public address system.

2.5 Building — Any structure for whatsoever purpose and of whatsoever materials constructed and every part thereof whether used as human habitation or not and includes foundation, plinth, walls, floors, roofs, chimneys, plumbing and building services, fixed platforms, *Veranda*, balcony, cornice or projection, part of a building or anything affixed thereto or any wall enclosing or intended to enclose any land or space and signs and outdoor display structures. Tents, *Shamianahs*, tarpaulin shelters, etc, erected for temporary and ceremonial occasions with the permission of the Authority shall not be considered as building.

2.6 Building, Height of — The vertical distance measured in the case of flat roofs, from the average level of the ground around and contiguous to the building or as decided by the Authority to the terrace of the last livable floor of the building adjacent to the external wall; and in the case of pitched roofs, up to the point where the external surface of the outer wall intersects the finished surface of the sloping roof; and in the case of gables facing the road, the mid-point between the eaves level and the ridge. Where the building is located in a sloped terrain, height shall be determined from the lowest level (that is approachable by the fire service vehicles) to the terrace level. Architectural features serving no other function except that of decoration shall be excluded for the purpose of measuring heights.

2.7 Combustible Material — A material which either burns itself or adds heat to a fire, when tested for non-combustibility in accordance with accepted standard [4(1)].

2.8 Common Path of Travel — That portion of the exit access which the occupants are required to traverse before two (or more) separate and distinct routes or two (or more) exits become available. Common paths of travel are part of travel distance.

2.9 Covered Area — Ground area covered by the building immediately above the plinth level. The area covered by the following in the open spaces is excluded from covered area (*see* Table 9):

a) Garden, rockery, well and well structures, plant nursery, water pool, swimming pool (if uncovered), platform round a tree, tank, fountain, bench, *Chabutara* with open top and unenclosed on sides by walls and the like;

b) Drainage culvert, conduit, catch-pit, gully pit, chamber, gutter and the like;

c) Compound wall, gate, unstoreyed porch and portico, slide, swing, uncovered staircases, ramp areas covered by *Chhajja* and the like; and

d) Watchman's booth, pump house, garbage shaft, electric cabin or substations, and such other utility structures meant for the services of the building under consideration.

NOTE — For the purpose of this Part, covered area equals the plot area minus the area due for open spaces in the plot.

2.10 Down-comer — An arrangement of firefighting within the building by means of down-comer pipe connected to terrace tank through terrace pump, gate valve and non-return valve and having mains not less than 100 mm internal diameter with landing valves on each floor/landing. It is also fitted with inlet connections at ground level for charging with water by pumping from fire service appliances and air release valve at roof level to release trapped air inside.

2.11 Dry Riser — An arrangement of firefighting within the building by means of vertical rising mains not less than 100 mm internal diameter with landing valves on each floor/landing which is normally dry but is capable of being charged with water usually by pumping from fire service appliances.

2.12 Emergency Lighting — Lighting provided for use when the supply to the normal lighting fails.

2.13 Emergency Lighting System — A complete but discrete emergency lighting installation also fed from the standby power source to the emergency lighting lamp(s), for example, self-contained emergency luminaire or a circuit from central battery (with or without monitoring system) connected through wiring to several escape lighting luminaries.

2.14 Escape Lighting — That part of the emergency lighting which is provided to ensure that the escape route is illuminated at all material times, for example, at all times when persons are on the premises, or at times the main lighting is not available, either for the whole building or for the means of egress.

2.15 Evacuation Lift — Lift that can be used, during an emergency, for self-evacuation.

2.16 Exit — That unobstructed component of means of egress which is between the exit access and the exit discharge or public way. Exit components include exterior exit doors at the level of exit discharge, interior exit stairways, exit passageways, exterior exit stairways and exterior exit ramps (*see* Fig. 1).

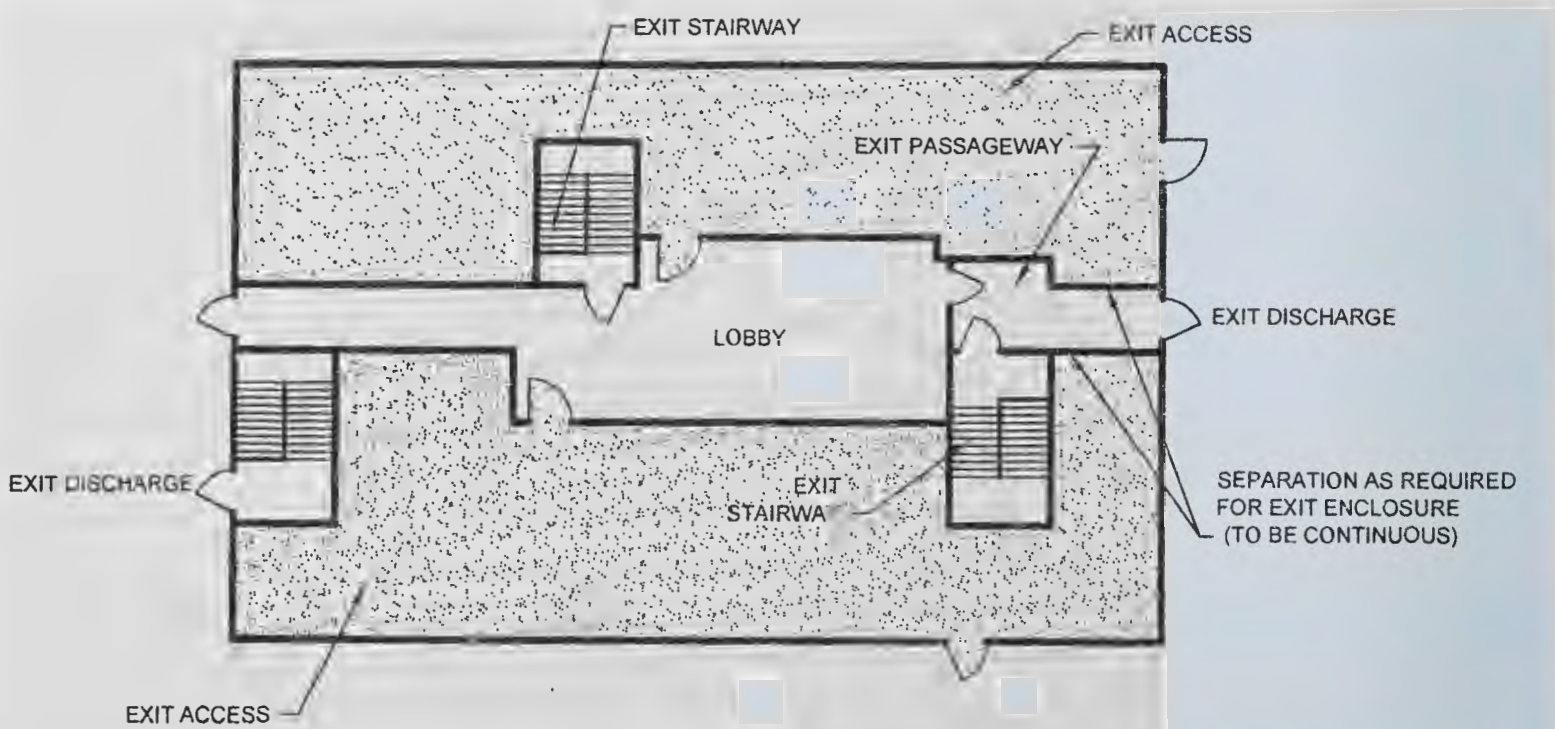

FIG. 1 COMPONENTS OF MEANS OF EGRESS

2.17 Exit Access — That portion of a means of egress that leads to an exit (for example, doorways, staircase lobby, ramps, *Veranda*, corridor or passageway leading to an exit) (*see* Fig. 1).

2.18 Exit Access Corridor — A corridor in exit access which may not necessarily have the requirement of exits being met.

2.19 Exit Discharge — The component of a means of egress between the termination of an exit and a public way (*see* Fig. 1).

2.20 Fire Barrier (or Fire Resisting Barrier) — A fire barrier is a vertically or horizontally aligned member such as a wall or a fire curtain, or a floor. These may be with discontinuities created by openings with a specified fire resistance rating, where such members are designed and constructed with a specified fire resistance rating to limit the spread of fire that also restricts the movement of smoke.

2.21 Fire Compartment — A space within a building that is enclosed by fire barrier or fire resistant walls on all sides, including the top and bottom.

2.22 Fire Door and Fire Door Assembly — Any combination of fire door, frame, hardware and other accessories that together provide a specific fire resistant rating to the opening in terms of its stability, integrity and insulation properties, when installed in the openings in fire separation walls. Fire door is a component of fire door assembly.

NOTES

1 Wherever reference has been made to fire door or fire check door in this Part, the same shall be construed as fire door assembly.

2 Fire doors in exits shall have fire rating as required in this Part to meet the requirement of integrity and stability; and the insulation criteria shall be 20 min.

3 Fire doors in exits shall be provided with intumescent seal.

4 Fire doors in exits shall not be allowed to be on hold open position and kept closed and to close by 'door closure — spring mechanism'.

5 Fire curtains shall not be allowed as fire exits. If so provided for compartmentation, independent fire door shall be provided meeting the requirement for fire door in exits as above (of the width as required) within the prescribed travel distance requirement.

2.23 Fire Exit — A way out leading from exit access with or without panic bar provided on the door.

2.24 Firefighting Shaft (Fire Tower) — An enclosed shaft having protected area of 120 min fire resistance rating comprising protected lobby, staircase and fireman's lift, connected directly to exit discharge or through exit passageway with 120 min fire resistant wall at the level of exit discharge to exit discharge. These shall also serve the purpose of exit requirement/ strategy for the occupants. The respective floors shall be approachable from fire-fighting shaft enabling the fire fighters to access the floor and also enabling the fire fighters to assist in evacuation through fireman's lift. The firefighting shaft shall be equipped with 120 min fire doors. The firefighting shaft shall be equipped with firemen talk back, wet riser and landing valve in its lobby, to fight fire by fire fighters (*see* Fig. 2 for a typical firefighting shaft).

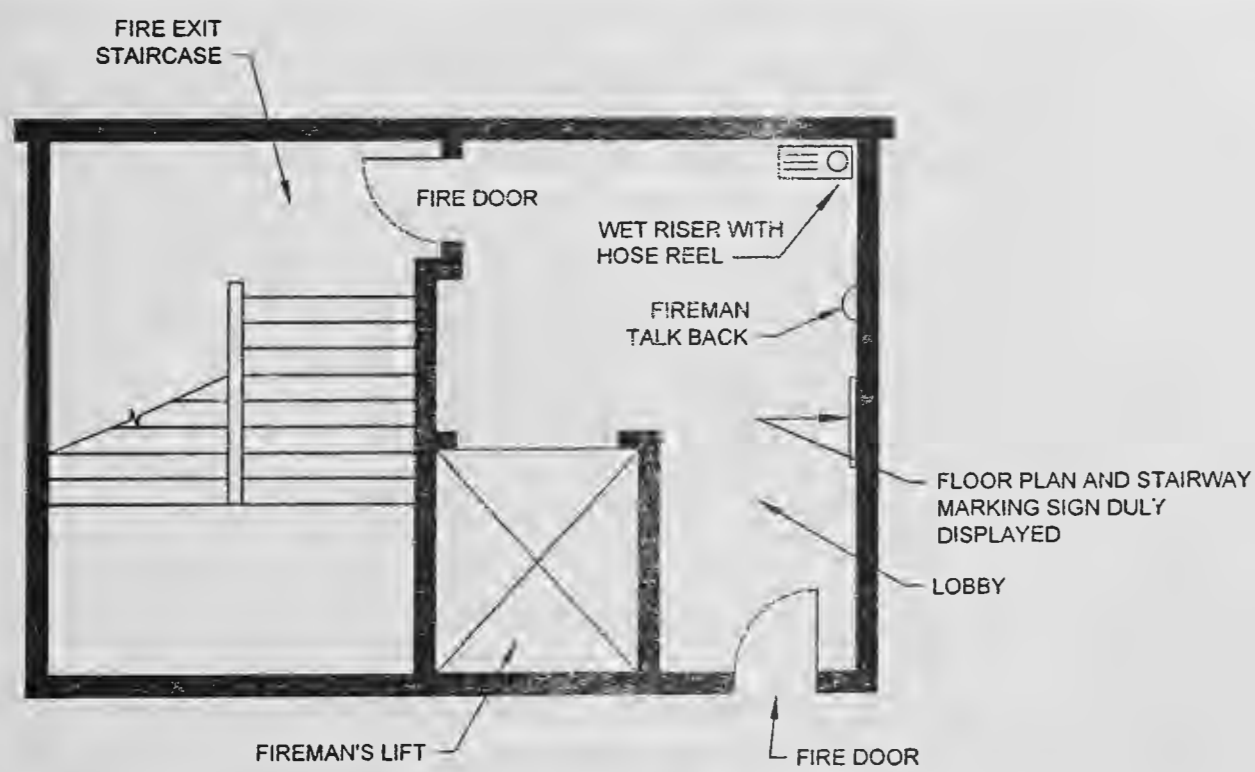

(LAYOUT TO BE PLANNED AS PER PROJECT BASIS MEETING ALL THE REQUIRED DETAILS)

NOTES

1 Where such lobbies and staircase in the firefighting shaft are naturally ventilated/cross-ventilated, the shaft may not.be enclosed and fire door need not be provided.

2 For all enclosed firefighting shaft, the shaft's lobby should have floor plan duly displayed for the information of fire fighters.

FIG. 2 TYPICAL FIRE FIGHTING SHAFT

2.25 Fire Load — Calorific energy, of the whole contents contained in a space, including the facings of the walls, partitions, floors and ceilings.

2.26 Fire Load Density — Fire load divided by floor area.

2.27 Fireman's Lift — A lift or a group of lifts invariably associated with all the features and requirements of a fire-fighting shaft. Such lift(s) are installed to enable fire services personnel to reach different floors with minimum delay, and shall meet the additional features as required in accordance with this Part. This lift also serves the purpose of meeting the requirement of evacuation lift for assisted evacuation.

2.28 Fire Resistance — Fire resistance is a property of an element of building construction and is the measure of its ability to satisfy for a stated period, some or all of the following criteria:

a) *Load bearing capacity* (*Stability*) (*R*) — The ability of a load bearing element to withstand fire exposure without any loss of structural stability.

b) *Integrity* (*E*) — Resistance to penetration of flame and hot gases.

c) *Insulation* (*I*) — Resistance to temperature rise on the unexposed face up to a maximum of 180°C at any single point and average temperature of 140°C.

2.29 Fire Resistance Rating — The time that a material or construction will withstand the standard fire exposure as determined by fire test done in accordance with the standard methods of fire tests of materials/ structures as per the accepted standard [4(2)].

NOTES

1 The requirement of rating of various building elements as given in this Part shall be applicable in accordance with the provisions given in the accepted standard [4(2)].

2 The fire resistance rating shall be specified in terms of minutes.

3 Fire resistance rating for non-structural material/assembly shall bear a label of compliance to such rating as per the approval of competent authority based on testing and evaluation. The label shall be permanently affixed to the material/assembly and may carry other relevant details such as name and type of the product, and manufacturer's details.

2.30 Fire Resistant Wall — Fire resistance rated wall, having opening(s) with specified fire resistant rating, which restricts the spread of fire from one part of a building to another part of the same building.

2.31 Fire Separation — The distance in metre, measured from the external wall of the building concerned to the external wall of any other building on the site, or from other site, or from the opposite side of street or other public space for the purpose of preventing the spread of fire.

2.32 Fire Stop — A fire resistant material, or construction, having a fire resistance rating of not less than the fire separating elements, installed in concealed spaces or between structural elements of a building to prevent the spread/propagation of fire and smoke through walls, ceilings and the like as per the laid down criteria.

NOTES

1 Fire stop assembly for through penetrations is a combination of firestop compatible for use with the penetrant, penetration items such as cables, cable tray, conduits, ducts, pipes, etc, and their means of support through the wall or opening that together restores the fire resistance rating of the fire separating elements in terms of its integrity and/or insulation properties.

2 Fire stop assembly for joints is the one where fire stop with movement capability is used to seal the linear joints between adjacent fire separating elements, to maintain the fire resistance of the separating elements, which should be installed within its tested design limits with regard to size of the joint, type of assembly, and anticipated compression and extension of the joint.

2.33 Fire Suppression Systems

a) *Gas based systems* — Systems that use gaseous agents as fire suppression media, such as, all agents alternate to Halon gases, listed and approved for use by relevant Indian Standards; other methods/types of gas based systems where their protection is equal to or better than what is suggested above for the type of application subject to the acceptance of Authorities concerned may also fall under such systems.

b) *Water based systems* — Systems that use mainly water as firefighting media such as hydrant system, sprinkler system, water spray system, foam system and water mist system.

2.34 Fire Wall or Fire Separating Wall — A fire resistance rated wall having fire protected openings, which restricts the spread of fire and extends continuously from the foundation to the roof (and through the roof at least 1m above the roof in case of combustible roof), with sufficient structural stability under fire conditions to allow collapse of construction on one side or either side without collapse of the wall.

2.35 Floor Area (Gross) — The area of the floor within the inside perimeter of the outside walls of the floor of the building under consideration with no deductions for corridors and passage-ways, stairs, closets, thickness of interior walls, columns, lifts and building shafts or other features.

2.36 Floor Area Ratio (FAR) — The quotient obtained by dividing the total covered area (plinth area) on all

floors by the area of the plot:

$$FAR = \frac{\text{Total covered area of all floors}}{\text{Plot area}}$$

2.37 Fire Exit Hardware — A door-latching assembly incorporating an actuating member or panic bar that releases the latch bolt upon the application of a force in the direction of egress travel, provided on exits.

2.38 High Rise Building — A building 15 m or above in height (irrespective of its occupancy).

2.39 Horizontal Exit — A defend in place or a staging arrangement, providing safety from fire and smoke originating from the area of incidence, by allowing alternative egress from a compartment to an area of refuge or another compartment at or near the same level. This also includes such egress from a compartment to an adjoining building. A horizontal exit shall be through a fire door of 120 min rating in a fire resistant wall. Horizontal exit require separation with the refuge area or adjoining compartment through 120 min fire barrier. The adjoining compartment of the horizontal exit should allow unlocked and ease of egress and exits for the occupants using defend in place strategy.

2.40 Lift Lobby — A space from which people directly enter a lift car(s) and into which people directly enter upon exiting a lift car(s).

2.41 Means of Egress — A continuous way of travel from any point in a building or structure to a public way, consisting of three separate and distinct parts, that is, exit access, exit and exit discharge.

2.42 Means of Escape — A way out of a building or structure that does not conform to the strict definition of 'means of egress' but does provide an alternate way out.

2.43 Metro Station

2.43.1 *Concourse* — Intermediate level(s) or area(s) connecting a station platform(s) to a public way through stairs, escalators or corridors.

2.43.2 *Crush Train Load* — The number of passengers inside a train when it is filled to maximum capacity permissible by rolling stock design.

2.43.3 *Entraining Load* –The number of passengers boarding a train at a platform.

2.43.4 *Headway* — The interval of time between the arrivals of consecutive trains at a platform in a station.

2.43.5 *Mass Rapid Transit* — Any station building or part thereof, permanent or temporary, through which people transit for the duration of time required to enter the building and board the train to depart the station platform or to alight from the train and depart from the station building.

2.43.6 *Non-transit Occupancy* — Occupancy not under the control of the system operating authority.

2.43.7 *Point of Safety* — One of the following: (a) An enclosed exit that leads to a public way or safe location outside the station, trainway, or vehicle, (b) An at-grade point beyond the vehicle, enclosing stations, or trainway, (c) A point on open track beyond the open or enclosed station or enclosed train-way, and (d) Any other location approved by the Authorities concerned.

2.43.8 *Station* — A place designated for the purpose of loading and unloading passengers, including service area and ancillary spaces associated with the same structure.

2.43.8.1 *Composite station* — A transit station that is constructed contiguous with non-transit occupancy.

2.43.8.2 *Enclosed station* — A station or portion thereof that does not meet the definition of an open station.

2.43.8.3 *Open station* — A station that is constructed such that it is directly open to the atmosphere, and smoke and heat are allowed to disperse directly into surrounding open atmosphere.

2.43.9 *Station Platform* — The area of a station immediately adjacent to a guideway, used primarily for loading and unloading passengers.

2.44 Mixed Occupancy — A multiple occupancy where the occupancies are intermingled.

2.45 Multiple Occupancy — A building or structure in which two or more classes of occupancy exist.

2.46 Occupancy or Use Group — The principal occupancy for which a building or a part of a building is used or intended to be used; for the purpose of classification of a building according to the occupancy, an occupancy shall be deemed to include subsidiary occupancies which are contingent upon it.

2.47 Occupant Load — Maximum number of persons that might occupy a building or portion thereof at any one time.

2.48 Place of Comparative Safety — Places within a building where people can stay little longer until evacuation, for example, refuge areas, terrace, fire/ smoke separated compartments, etc.

2.49 Pressurization — The establishment of a pressure difference across a barrier to protect exit, stairway, lobby, exit passageway or room of a building from smoke penetration.

2.50 Pressurization Level — The pressure difference between the pressurized space and the adjoining area served by the pressurized space expressed in Pascal (Pa).

2.51 Public Way — A street, alley, or other similar parcel of land essentially open to the outside air, dedicated, or otherwise permanently appropriated to the public for public use and having a clear width and height of not less than 3 m.

2.52 Ramp — The construction, in the form of an inclined plane that is steeper than or equal to 1 : 20 (5 percent) from the horizontal, together with any intermediate landing, that makes it possible to pass from one level to another.

2.53 Refuge Area — An area within the building for a temporary use during egress. It generally serves as a staging area which is protected from the effect of fire and smoke.

2.54 Roof Exits — A means of escape on to the roof of a building, where the roof has access to it from the ground through alternative stair case or adjacent building.

2.55 Site (Plot) — A parcel (piece) of land enclosed by definite boundaries.

2.56 Smoke Barrier — A continuous membrane, or a membrane, where such membrane is designed and constructed to restrict the movement of smoke.

2.57 Smoke Compartment — A space within a building enclosed by smoke barriers on all sides.

2.58 Stack Pressure — Pressure difference caused by a temperature difference creating an air movement within a duct, chimney or enclosure.

2.59 Travel Distance — The distance to be travelled from any point in a building to a protected exit or external escape route or final exit measured along the line of travel.

2.60 Ventilation — Supply of outside air into, or the removal of inside air from an enclosed space.

2.61 Venting Fire — The process of facilitating heat and smoke to leave a building as quickly as possible by such paths so that lateral spread of fire and heat is checked, firefighting operations are facilitated and minimum fire damage is caused.

2.62 Visual Strobes/Flashing — It is an audio-visual fire alarm for alerting persons with hearing impairment with flashing light. The strobe frequency should be from 0.5 Hz to 4.0 Hz.

NOTE — Care should be taken to ensure that overlapping strobes do not combine to result in a higher frequency of flashing.

2.63 Volume to Plot Area Ratio (VPR) — The ratio of volume of building measured in cubic metre to the area of the plot measured in square metre and expressed in metre.

2.64 Water Based Systems

2.64.1 *Hydrant System* — A distribution system having a network of piping installed underground/above-ground around and/or through inside of a building with internal and/or external hydrants fitted with landing valves at regular intervals according to the occupancy. The distribution system is connected to water supply system for firefighting.

2.64.2 *Automatic Sprinkler System* — A system of water pipes fitted with sprinkler heads at suitable intervals and heights and designed to actuate automatically, control and extinguish a fire by the discharge of water.

2.64.3 *Automatic Water Spray Systems* — A special fixed pipe system connected to a reliable source of fire protection water supply and equipped with water spray nozzles for specific water discharge and distribution over the surface or area to be protected. The piping system is connected to the water supply through an automatically actuated deluge valve which initiates flow of water. Automatic actuation is achieved by operation of automatic detecting equipment installed along with water spray nozzles. There are two types of systems namely high velocity and medium velocity systems.

2.64.4 *Water Mist Systems* — A distribution system connected to a pumping and water supply system that is equipped with nozzles capable of delivering water mist to the part/entire enclosure or area, intended to control, suppress, or extinguish fire and is capable of meeting the specified performance requirements.

2.64.5 *Foam Protection System* — Firefighting systems where foam is made by mechanically mixing air with a solution consisting of fresh water to which a foaming agent (liquid concentrate) has been added. Firefighting foam is a stable aggregation of small bubbles of density lower than oil or water, and shows tenacious qualities for covering horizontal surfaces. There are three types of foam applications that is, low, medium and high expansion foams depending upon the application.

2.65 Wet Riser — An arrangement for firefighting within the building by means of vertical rising mains not less than 100 mm nominal diameter with landing valves on each floor/landing for firefighting purposes and permanently charged with water from a pressurized supply.

NOTE — For definition of other terms, reference shall be made to accepted standards [4(3)].

3 FIRE PREVENTION

3.1 Classification of Buildings Based on Occupancy

3.1.1 *General Classification*

All buildings, whether existing or hereafter erected shall be classified according to use or the character of

occupancy in one of the following groups:

Group A	Residential
Group B	Educational
Group C	Institutional
Group D	Assembly
Group E	Business
Group F	Mercantile
Group G	Industrial
Group H	Storage
Group J	Hazardous

The details of each occupancy and example of buildings in each group are given in **3.1.2** to **3.1.10.**

3.1.1.1 *Minor occupancy*

This is purely incidental to operations in a main occupancy, which shall be considered as part of the main occupancy and shall be classified under the relevant group for the main occupancy.

3.1.1.2 *Mixed occupancy*

Where two or more types of occupancies intermingle in the same building, the entire building shall be treated as mixed occupancy and the same shall comply with **3.1.12.**

3.1.2 *Group A Residential Buildings*

These shall include any building in which sleeping accommodation is provided for normal residential purposes with or without cooking or dining or both facilities, except any building classified under Group C.

Buildings and structures under Group A shall be further subdivided as follows:

Subdivision A-1	Lodging and rooming houses
Subdivision A-2	One or two family private dwellings
Subdivision A-3	Dormitories
Subdivision A-4	Apartment houses
Subdivision A-5	Hotels
Subdivision A-6	Starred hotels

a) *Subdivision A-1 Lodging and rooming houses* — These shall include any building or group of buildings under the same management, in which separate sleeping accommodation on transient or permanent basis, with or without dining facilities but without cooking facilities for individuals is provided. This includes inns, clubs, motels and guest houses.

NOTE — A lodging or rooming house shall be classified as a dwelling in Subdivision A-2, if no room in any of its private dwelling units is rented to more than three persons.

b) *Subdivision A-2 One or two family private dwellings* — These shall include any private dwelling, which is occupied by members of one or two families and has a total sleeping accommodation for not more than 20 persons.

If rooms in a private dwelling are rented to outsiders, these shall be for accommodating not more than three persons per room.

If sleeping accommodation for more than 20 persons is provided in any one residential building, it shall be classified as a building in Subdivision A-1 or Subdivision A-4 as the case may be.

c) *Subdivision A-3 Dormitories* — These shall include any building in which group sleeping accommodation is provided, with or without dining facilities for persons who are not members of the same family, in one room or a series of closely associated rooms under joint occupancy and single management, for example, school and college dormitories, students, and other hostels and military barracks.

d) *Subdivision A-4 Apartment houses* — These shall include any building or structure in which living quarters are provided for three or more families, living independently of each other and with independent cooking facilities, for example, apartment houses, mansions and *Chawls.*

e) *Subdivision A-5 Hotels* — These shall include any building or group of buildings under single management, in which sleeping accommodation is provided, with or without dining facilities for hotels classified up to Four Star Category.

f) *Subdivision A-6 Starred hotels* — These shall include the hotels duly approved by the concerned authorities as Five Star and above hotels.

3.1.3 *Group B Educational Buildings*

These shall include any building used for school, college, other training institutions involving assembly for instruction, education or recreation for not less than 20 students.

Buildings and structures under Group B shall be further subdivided as follows:

Subdivision B-1	Schools up to senior secondary level
Subdivision B-2	All others/training institutions

a) *Subdivision B-1 Schools up to senior secondary level* — This subdivision shall

include any building or a group of buildings under single management which is used for students not less than 20 in number.

b) *Subdivision B-2 All others/training institutions* — This subdivision shall include any building or a group of buildings under single management which is used for students not less than 100 in number.

In the case of temporary buildings/structures which are utilized for educational purposes, the provisions of **3.2.5.3** shall apply.

If residential accommodation is provided in the schools/ institutions that portion of occupancy shall be classified as a building in Subdivision A-3.

3.1.4 *Group C Institutional Buildings*

These shall include any building or part thereof, which is used for purposes, such as medical or other treatment or care of persons suffering from physical or mental illness, disease or infirmity; care of infants, convalescents or aged persons and for penal or correctional detention in which the liberty of the inmates is restricted. Institutional buildings ordinarily provide sleeping accommodation for the occupants.

Buildings and structures under Group C shall be further subdivided as follows:

Subdivision C-1	Hospitals and sanatoria
Subdivision C-2	Custodial institutions
Subdivision C-3	Penal and mental institutions

a) *Subdivision C-1 Hospitals and sanatoria* — This subdivision shall include any building or a group of buildings under single management, which is used for housing persons suffering from physical limitations because of health or age and those incapable of self-preservation, for example, hospitals, infirmaries, sanatoria and nursing homes.

b) *Subdivision C-2 Custodial institutions* — This subdivision shall include any building or a group of buildings under single management, which is used for the custody and care of persons, such as children, convalescents and the aged who are incapable of self-preservation, for example, homes for the aged and infirm, convalescent homes and orphanages.

c) *Subdivision C-3 Penal and mental institutions* — This subdivision shall include any building or a group of buildings under single management, which is used for housing persons under restraint, or who are detained for penal or corrective purposes, in which the liberty of the inmates is restricted, for example, jails, prisons, mental hospitals, mental sanatoria and reformatories.

3.1.5 *Group D Assembly Buildings*

These shall include any building or part of a building, where not less than 50 persons congregate or gather for amusement, recreation, social, religious, patriotic, civil, travel and similar purposes, for example, theatres; motion picture houses; assembly halls; auditoria; exhibition halls; muscums; skating rinks; gymnasiums; restaurants; places of worship; dance halls; club rooms; passenger stations and terminals of air, surface and marine public transportation services; and stadia.

Buildings under Group D shall be further subdivided as follows:

Subdivision D-1	Buildings having a theatrical or motion picture or any other stage and fixed seats for over 1 000 persons
Subdivision D-2	Buildings having a theatrical or motion picture or any other stage and fixed seats up to 1 000 persons
Subdivision D-3	Buildings without a permanent stage having accommodation for 300 or more persons but no permanent seating arrangement
Subdivision D-4	Buildings without a permanent stage having accommodation for less than 300 persons with no permanent seating arrangement
Subdivision D-5	All other structures including temporary structures designed for assembly of people not covered by Subdivisions D-1 to D-4, at ground level
Subdivision D-6	Buildings having mixed occupancies of assembly and mercantile (for example, shopping malls providing facilities such as shopping, cinema theatres, multiplexes and restaurants/food courts)
Subdivision D-7	Underground and elevated mass rapid transit system

a) *Subdivision D-1* — This subdivision shall include any building primarily meant for theatrical or operatic performances and which has a stage, proscenium curtain, fixed or portable scenery or scenery loft, lights, mechanical appliances or other theatrical

accessories and equipment for example, theatres, motion picture houses, auditoria, concert halls, television and radio studios admitting an audience and which are provided with fixed seats for over 1 000 persons.

b) *Subdivision D-2* — This subdivision shall include any building primarily meant for use as described for Subdivision D-1, but with fixed seats up to 1 000 persons.

c) *Subdivision D-3* — This subdivision shall include any building, its lobbies, rooms and other spaces connected thereto, primarily intended for assembly of people, but which has no theatrical stage or permanent theatrical and/or cinematographic accessories and has accommodation for 300 persons or more, for example, dance halls, night clubs, halls for incidental picture shows, dramatic, theatrical or educational presentation, lectures or other similar purposes having no theatrical stage except a raised platform and used without permanent seating arrangement; art galleries, community halls, marriage halls, places of worship, museums, lecture halls, passenger terminals and heritage and archaeological monuments, pool and billiard parlours, bowling alleys, community halls, courtrooms, gymnasiums (without spectator seating), indoor swimming pools (without spectator seating), indoor tennis courts (without spectator seating).

d) *Subdivision D-4* — This subdivision shall include any building primarily intended for use as described in Subdivision D-3, but with accommodation for less than 300 persons with no permanent seating arrangements.

e) *Subdivision D-5* — This subdivision shall include any building or structure, permanent or temporary meant for assembly of people not covered by Subdivisions D-1 to D-4, for example, grandstands, stadia, amusement park structures, reviewing stands and circus tents, arenas, external swimming pools, tennis and similar type of courts.

f) *Subdivision D-6* — This subdivision shall include any building for assembly of people provided with multiple services/facilities like shopping, cinema theatres, multiplexes, restaurants/food court.

g) *Subdivision D-7* — This subdivision shall include any building or structure like example, underground or elevated railways.

3.1.6 *Group E Business Buildings*

These shall include any building or part thereof which is used for transaction of business for keeping of accounts and records and similar purposes, professional establishments, service facilities, etc. City halls, town halls, courthouses and libraries shall be classified in this group so far as the principal function of these is transaction of public business and keeping of books and records.

Buildings under Group E shall be further subdivided as follows:

Subdivision E-1	Offices, banks, professional establishments, like offices of architects, engineers, doctors, lawyers, post offices and police stations
Subdivision E-2	Laboratories, outpatient clinics, research establishments, libraries and test houses
Subdivision E-3	Electronic data processing centres, computer installations, information technology parks and call centres
Subdivision E-4	Telephone exchanges
Subdivision E-5	Broadcasting stations, T.V. stations and air traffic control towers

3.1.7 *Group F Mercantile Buildings*

These shall include any building or part thereof, which is used as shops, stores, market, for display and sale of merchandise, either wholesale or retail.

Mercantile buildings shall be further subdivided as follows:

Subdivision F-1	Shops, stores, departmental stores, markets (any with covered area up to 500 m^2)
Subdivision F-2	Shops, stores, departmental stores, markets (any with covered area more than 500 m^2)
Subdivision F-3	Underground shopping centres

Storage and service facilities incidental to the sale of merchandise and located in the same building shall also be included under this group.

3.1.8 *Group G Industrial Buildings*

These shall include any building or part of a building or structure, in which products or materials of all kinds and properties are fabricated, assembled, manufactured or processed, for example, assembly plants, industrial laboratories, dry cleaning plants, power plants,

generating units, pumping stations, fumigation chambers, laundries, buildings or structures in gas plants. refineries, dairies and saw-mills, etc.

Buildings under Group G shall be further subdivided as follows:

Subdivision G-1	Buildings used for low hazard industries
Subdivision G-2	Buildings used for moderate hazard industries
Subdivision G-3	Buildings used for high hazard industries

The hazard of occupancy, for the purpose of the Code, shall be the relative danger of the start and spread of fire, the danger of smoke or gases generated, the danger of explosion or other occurrences potentially endangering the lives and safety of the occupants of the buildings.

Hazard of occupancy shall be determined by the Authority on the basis of the fire loads of the contents, and the processes or operations conducted in the building, provided, however, that where the combustibility of the material, the flame spread rating of the interior finish or other features of the building or structure are such as to involve a hazard greater than the occupancy hazard, the greater degree of hazard shall govern the classification.

For determination of fire loads and fire load density for arriving at the classification of occupancy hazard, guidance on calorific values of some common materials is given at Annex A.

A broad classification of industrial occupancies into low, moderate and high hazard classes is given at Annex B, for guidance. Any occupancy not covered in Annex B, shall be classified in the most appropriate class depending on the degree of hazard.

Where different degrees of hazard of occupancy exist in different parts of a building, the most hazardous of those shall govern the classification for the purpose of this Code, except in cases where hazardous areas are segregated or protected as specified in the Code.

a) *Subdivision G-1* — This subdivision shall include any building in which the contents are of such comparative low combustibility and the industrial processes or operations conducted therein are of such a nature that there is hardly any possibility for any self-propagating fire to occur and the only consequent danger to life and property may arise from panic, fumes or smoke, or fire from some external source.

b) *Subdivision G-2* — This subdivision shall include any building in which the contents or industrial processes or operations conducted therein are liable to give rise to a fire which will burn with moderate rapidity or result in other hazardous situation and may give off a considerable volume of smoke, but from which neither toxic fumes nor explosions are to be feared in the event of fire.

c) *Subdivision G-3* — This subdivision shall include any building in which the contents or industrial processes or operations conducted therein are liable to give rise to a fire which will burn with extreme rapidity or result in other hazardous situation or from which poisonous fumes or explosions are to be feared in the event of a fire.

3.1.9 *Group H Storage Buildings*

These shall include any building or part of a building used primarily for the storage or sheltering (including servicing, processing or repairs incidental to storage) of goods, ware or merchandise (except those that involve highly combustible or explosive products or materials), vehicles or animals, for example, warehouses, cold storages, freight depots, transit sheds, storehouses, truck and marine terminals, garages, hangars, grain elevators, barns and stables. Storage properties are characterized by the presence of relatively small number of persons in proportion to the area. Any new use which increases the number of occupants to a figure comparable with other classes of occupancy shall change the classification of the building to that of the new use, for example, hangars used for assembly purposes, warehouses used for office purposes, garage buildings used for manufacturing.

3.1.10 *Group J Hazardous Buildings*

These shall include any building or part thereof which is used for the storage, handling, manufacture or processing of highly combustible or explosive materials or products which are liable to burn with extreme rapidity and/or which may produce poisonous fumes or explosions for storage, handling, manufacturing or processing which involve highly corrosive, toxic or noxious alkalis, acids or other liquids or chemicals producing flame, fumes and explosive, poisonous, irritant or corrosive gases; and for the storage, handling or processing of any material producing explosive mixtures of dust which result in the division of matter into fine particles subject to spontaneous ignition. Examples of buildings in this class are those buildings which are used for,

a) storage, under pressure of more than 0.1 N/mm^2 and in quantities exceeding 70 m^3,

of acetylene, hydrogen, illuminating and natural gases, ammonia, chlorine, phosgene, sulphur dioxide, carbon dioxide, methyloxide and all gases subject to explosion, fume or toxic hazard, cryogenic gases, etc;

b) storage and handling of hazardous and highly flammable liquids, liquefiable gases like LPG, rocket propellants, etc;

c) storage and handling of hazardous and highly flammable or explosive materials (other than liquids); and

d) manufacture of artificial flowers, synthetic leather, ammunition, explosives and fireworks.

NOTE — A list of hazardous substances giving quantities, for which or exceeding which owners handling such substances are required to be covered under *The Public Liability Insurance Act*, 1991, has been notified under the '*Rules on Emergency Planning, Preparedness and Response for Chemical Accidents*' by the Govt. of India, Ministry of Environment and Forests Notification No. G.S.R. 347(E) dated 01 August 1996.

3.1.11 *Mixed Occupancy*

In case of mixed occupancy, in so far as fire protection is concerned, all the occupancies/the entire building shall be governed by the most restrictive provisions of the Code among those applicable for individual occupancies. The provisions for life safety given in the Code for individual occupancy shall, however, apply to the respective occupancies. Exits in such mixed occupancy shall be arranged so as to ensure that means of egress is not decreased in the direction of egress travel.

Further, in such mixed occupancies, the occupancies are also required to be separated (horizontally and/or vertically as the case may be) by a 240 min fire resistance rating.

3.1.12 Where change in the occupancy of any building places it in a different group or in a different subdivision of the same group, such building shall be made to comply with the requirements of the Code for the new group or its subdivision.

3.1.13 Where the new occupancy of a building is less hazardous, based on life and fire risk, than its existing occupancy, it shall not be necessary to conform to the requirements of the Code for the new group or its subdivision.

3.1.14 A certificate of occupancy shall be necessary, as required under Part 2 'Administration' of the Code, before any change is effected in the character of occupancy of any building.

3.2 Fire Zones

3.2.1 *Demarcation*

The city or area under the jurisdiction of the Authority shall, for the purpose of the Code, be demarcated into distinct zones, based on fire hazard inherent in the buildings and structures according to occupancy (*see* **3.1**), which shall be called as 'Fire Zones'.

3.2.2 *Number and Designation of Fire Zones*

3.2.2.1 The number of fire zones in a city or area under the jurisdiction of the Authority depends upon the existing layout, types of building construction (*see* **3.3**), classification of existing buildings based on occupancy (*see* **3.1**) and expected future development of the city or area. In large cities or areas, three fire zones may be necessary, while in smaller ones, one or two may be adequate.

3.2.2.2 The fire zones shall be made use of in land use development plan and shall be designated as follows:

a) *Fire Zone No. 1* — This shall comprise areas having residential (Group A), educational (Group B), institutional (Group C), assembly (Group D), small business (Subdivision E-1) and mercantile (Group F) buildings, or areas which are under development for such occupancies.

b) *Fire Zone No. 2* — This shall comprise business (Subdivisions E-2 to E-5) and industrial buildings (Subdivisions G-1 and G-2), except high hazard industrial buildings (Subdivision G-3) or areas which are under development for such occupancies.

c) *Fire Zone No. 3* — This shall comprise areas having high hazard industrial buildings (Subdivision G-3), storage buildings (Group H) and buildings for hazardous uses (Group J) or areas which are under development for such occupancies.

3.2.3 *Change in the Fire Zone Boundaries*

When the boundaries of any fire zone are changed, or when it is intended to include other areas or types of occupancies in any fire zone, it shall be done by following the same procedure as for promulgating new rules or ordinances or both.

3.2.4 *Overlapping Fire Zone*

3.2.4.1 When any building is so situated that it extends to more than one fire zone, it shall be deemed to be in the fire zone in which the major portion of the building or structure is situated.

3.2.4.2 When any building is so situated that it extends equally to more than one fire zone, it shall be deemed

to be in the fire zone having more hazardous occupancy buildings.

3.2.5 *Temporary Buildings or Structures*

3.2.5.1 Temporary buildings and structures shall be permitted only in Fire Zones No. 1 and 2 as the case may be, according to the purpose for which these are to be used, by special permit from the Authority for a limited period and subject to such conditions as may be imposed in the permit.

3.2.5.2 Such buildings and temporary structures shall be completely removed on the expiry of the period specified in the permit.

3.2.5.3 Adequate fire precautionary measures in the construction of temporary structures and *Pandals* shall be taken in accordance with good practice [4(4)].

3.2.6 *Restrictions on the Type of Construction for New Buildings*

These shall be as follows:

a) Buildings erected in Fire Zone No. 1 shall conform to construction of Type 1, 2, 3 or 4.
b) Buildings erected in Fire Zone No. 2 shall conform to construction of Type 1, 2 or 3.
c) Buildings erected in Fire Zone No. 3 shall conform to construction of Type 1 or 2.

3.2.7 *Restrictions on Existing Buildings*

The existing buildings in any fire zone shall not be required to comply with the requirements of the Code unless these are altered, or in the opinion of the Authority, such building constitutes a hazard to the safety of the adjacent property or to the occupants of the building itself or is an unsafe building. In the event of alteration, it shall be necessary to obtain permission of the Authority for such alteration consistent with fire hazard (*see* Part 2 'Administration' of the Code).

Alterations/modifications/renovations shall be accomplished so as to ensure conformity with all the safety requirements of the new buildings. Such alterations shall not in any way bring down level of fire and life safety below that which existed earlier. Any addition or alterations or construction of cubicles or partitioning, for floor area exceeding 500 m^2 for all high rise buildings shall be with the approval of local fire authority.

3.3 Types of Construction

3.3.1 The design of any building and the type of materials used in its construction are important factors in making the building resistant to a complete burn-out and in preventing the rapid spread of fire, smoke or fumes, which may otherwise contribute to the loss of lives and property.

The fire resistance of a building or its structural and non-structural elements is expressed in minutes against a specified fire load which is expressed in kcal/m^2, and against a certain intensity of fire. The fire-resistance test for structural element shall be done in accordance with accepted standards [4(2)]. For the purpose of the Code, the types of construction according to fire resistance shall be classified into four categories, namely, Type 1 Construction, Type 2 Construction, Type 3 Construction and Type 4 Construction. The minimum fire resistance ratings of structural and non-structural members for various types of construction shall be as given in Table 1.

Non-combustible materials should be used for construction of buildings, and the internal walls of staircase enclosures should be of brick work or reinforced concrete or any other material of construction with minimum of 120 min rating. The walls for the chimney shall be of Type 1 or Type 2 Construction depending on whether the flue gas temperature is above 200°C or less, respectively.

3.3.2 It is required that a structural and/or non-structural element/component shall have the requisite fire resistance rating as per Table 1. The fire resistance rating for the structural and non-structural elements shall be based on guidelines as per approved and accepted standards. The fire rating shall be validated and certified with a view to meeting the requirements of Table 1. In the absence of any validated/certified rating, guidance may be obtained from the information available in Annex C.

3.3.3 Load bearing steel beams and columns of buildings having total covered area of 500 m^2 and above shall be protected against failure/collapse of structure in case of fire. This could be achieved by use of appropriate methodology using suitable fire resistance rated materials along with suppression system (*see* Annex C, Table 25 and Table 26).

3.3.4 The false ceiling, including all fixtures used for its suspension, shall be of non-combustible material and shall provide adequate fire resistance to the ceiling in order to prevent spread of fire across ceiling.

3.4 General Requirements of All Individual Occupancies

3.4.1 *General*

All buildings shall satisfy certain requirements, which contribute, individually and collectively, to the safety of life from fire, smoke, fumes and panic arising from these or similar causes. There are, however, certain general principles and common requirements, which are applicable to all or most of the occupancies.

Table 1 Fire Resistance Ratings of Structural and Non-Structural Elements (minutes)
(*Clauses* 3.3.1 *and* 3.3.2)

Sl No.	Structural Element	Fire Resistance Ratings (min) for Type of Construction			
		Type 1	Type 2	Type 3	Type 4
(1)	(2)	(3)	(4)	(5)	(6)
i)	Exterior walls:				
	a) Fire separation less than 3.7 m:				
	1) Bearing	240	120	120	60
	2) Non-bearing	120	90	60	60
	b) Fire separation of 3.7 m or more but less than 9 m:				
	1) Bearing	240	120	120	60
	2) Non-bearing	90	60	60	60
	c) Fire separation of 9 m or more:				
	1) Bearing	240	120	120	60
	2) Non-bearing	60	60	60	60
ii)	Fire separation assemblies (like fire check doors)	120	120	120	120
iii)	Fire enclosures of exits	120	120	120	120
iv)	Shafts for services, lift hoistway and refuse chutes	120	120	120	120
v)	Vertical separation between adjacent tenant spaces	60	60	60	60
vi)	Dwelling unit separation:				
	a) Load bearing	120	120	60	60
	b) Non-load bearing	60	60	30	30
vii)	Interior bearing walls, bearing partitions, columns, beams, girders, trusses (other than roof trusses) and framing:				
	a) Supporting more than one floor	240	120	120	120
	b) Supporting one floor only	180	90	60	60
	c) Supporting a roof only	180	90	60	60
viii)	Walls supporting structural members	180	90	60	60
ix)	Floor construction	120	90	60	60
x)	Roof construction:				
	a) 5 m or less in height to lowest member	120	90	60	60
	b) More than 5 m but less than 6.7 m in height to lowest member	60	60	60	60
	c) 6.7 m or more in height to lowest member	0	0	0	0

NOTES

1 The above fire resistance rating shall be required to achieve the respective type of construction unless otherwise specified in the respective clauses for different applications/use.

2 In case of lift bank, the partition wall, if any, need not be of fire rating specified in this table.

3.4.2 *Exceptions and Deviations*

Exceptions and deviations to the general provisions of requirements of individual occupancies are given as applicable to each type of occupancy in **6.1** to **6.9**. In case of practical difficulty or to avoid unnecessary hardship, without sacrificing reasonable safety, local head, fire services may consider exemptions from the Code.

3.4.3 *Occupation of Buildings under Construction*

3.4.3.1 A building or portion of the building may be occupied during construction, repairs, alterations or additions only if all means of exit and fire protection measures are in place and continuously maintained for the occupied part of the building.

3.4.3.2 A high rise building during construction shall be provided with the following fire protection measures, which shall be maintained in good working condition at all the times:

a) Dry riser of minimum 100 mm diameter pipe with hydrant outlets on the floors constructed with a fire service inlet to boost the water in the dry riser and maintenance should be in accordance with good practice [4(5)].

b) Drums of 2 000 litre capacity filled with water with two fire buckets on each floor;

c) A water storage tank of minimum 20 000 litre capacity, which may be used for other construction purposes also.

3.4.4 *Maximum Height, Floor Area Ratio and Open Spaces*

3.4.4.1 Every building shall be restricted in its height above the ground level and the number of storeys, depending upon its occupancy and the type of construction. The height shall be measured as specified in Part 3 'Development Control Rules and General Building Requirements' of the Code. The maximum permissible height for any combination of occupancy and types of construction should necessarily be related to the width of street fronting the building, or floor area ratios and the local firefighting facilities available.

NOTE — Set-back distances (according to the permissible height for each type of building as per the occupancy), width of streets providing approach to the building, permitted floor area ratio (FAR), permitted open space around or inside buildings, provision of adequate passageway and clearances required for firefighting vehicles, etc shall be strictly governed by the provisions of Part 3 'Development Control Rules and General Building Requirements' of the Code.

3.4.4.2 *Floor area ratio*

The comparative floor area ratios for different occupancies and types of construction are given in Table 2 (*see also* Part 3 'Development Control Rules and General Building Requirements' of the Code).

3.4.4.3 The requirements of open space around the building(s) shall be in accordance with Part 3 'Development Control Rules and General Building Requirements' of the Code.

3.4.5 *Openings in Fire Resistant Walls and Floors*

3.4.5.1 At the time of designing openings in fire resistant walls and floors, particular attention shall be paid to all such factors which limit fire spread through these openings and maintain fire rating of the structural members.

3.4.5.2 For Types 1 to 3 constructions, a doorway or opening in a fire resistant wall on any floor shall be limited to 5.6 m^2 in area with a maximum height/width of 2.75 m. Every wall opening shall be protected with fire-resisting doors, having the fire rating of not less than 120 min. The openings in the floors shall be protected by vertical enclosures extending above and below such openings, such enclosures having a fire resistance of not less than 120 min and all openings therein being protected with a fire-resisting assembly as specified in **3.4.5.6**.

For escalator openings, the smoke spill shall be avoided by provision of smoke barrier (of 450-600 mm) thereby creating smoke compartment. Further, the protection shall be ensured through installation of sprinklers on all sides of the cut out opening on each floor (*see* Fig. 3 for details).

3.4.5.3 For Type 4 construction, openings in the fire separating walls or floors shall be fitted with 120 min fire-resistance rated assemblies.

Table 2 Comparative Floor Area Ratios for Occupancies Facing One Public Street at least 9 m Wide

(*Clause* 3.4.4.2)

Sl No.	Occupancy Classification	Type of Construction			
		Type 1	Type 2	Type 3	Type 4
(1)	(2)	(3)	(4)	(5)	
i)	Residential	UL	2.0	1.4	1.0
ii)	Educational	UL	2.0	1.4	1.0
iii)	Institutional	UL	1.5	1.0	0.8
iv)	Assembly	UL	1.0	0.7	0.5
v)	Business	UL	2.9	2.3	1.6
vi)	Mercantile	8.0	1.8	1.4	1.0
vii)	Industrial	7.5	1.9	1.6	1.3
viii)	Storage (*see* Note 5)	6.0	1.5	1.3	1.0
ix)	Hazardous (*see* Note 5)	2.8	1.1	0.9	NP

UL — Unlimited.

NP — Not permitted.

NOTES

1 The FAR values given in this table are subject to overall restrictions on the heights of buildings in the case of educational, institutional, assembly, storage and hazardous occupancies as specified in col 2 of Table 7.

2 This table has been prepared, taking into account the combustible content in the different occupancies as well as the fire resistance offered by the type of construction.

3 This table should be modified by the Authority, taking into account the other aspects as given below:

a) Density in terms of dwelling units per hectare;

b) Traffic considerations;

c) Parking spaces;

d) Local fire-fighting facilities; and

e) Water supply, drainage and sanitation requirements.

4 The FAR values specified in this table may be increased by 20 percent for the following services:

a) A basement or cellar space under a building constructed on stilts and used as a parking space and air conditioning plant room used as accessory to the principal use;

b) Watchman's booth, pump house, garbage shaft, electric cabin or substation and other utility structures meant for the services of the building under considerations;

c) Projections and accessory buildings as specifically exempted under the Code; and

d) Staircase room and lift rooms above the topmost storey; architectural feature; and chimneys and elevated tanks of dimensions as permissible under the Code; the area of the lift shaft shall be taken only on one floor.

5 In so far as single storey storage and hazardous occupancies are concerned, they would be further governed by volume to plot area ratio (VPR) to be decided by the Authority.

3.4.5.4 *Service ducts and shafts*

Openings in walls or floors which are necessary to be provided to allow passages of all building services like cables, electrical wirings, telephone cables, plumbing pipes, etc, shall be protected by enclosure in the form of ducts/shafts having a fire resistance not less than 120 min. The inspection door for electrical shafts/ducts

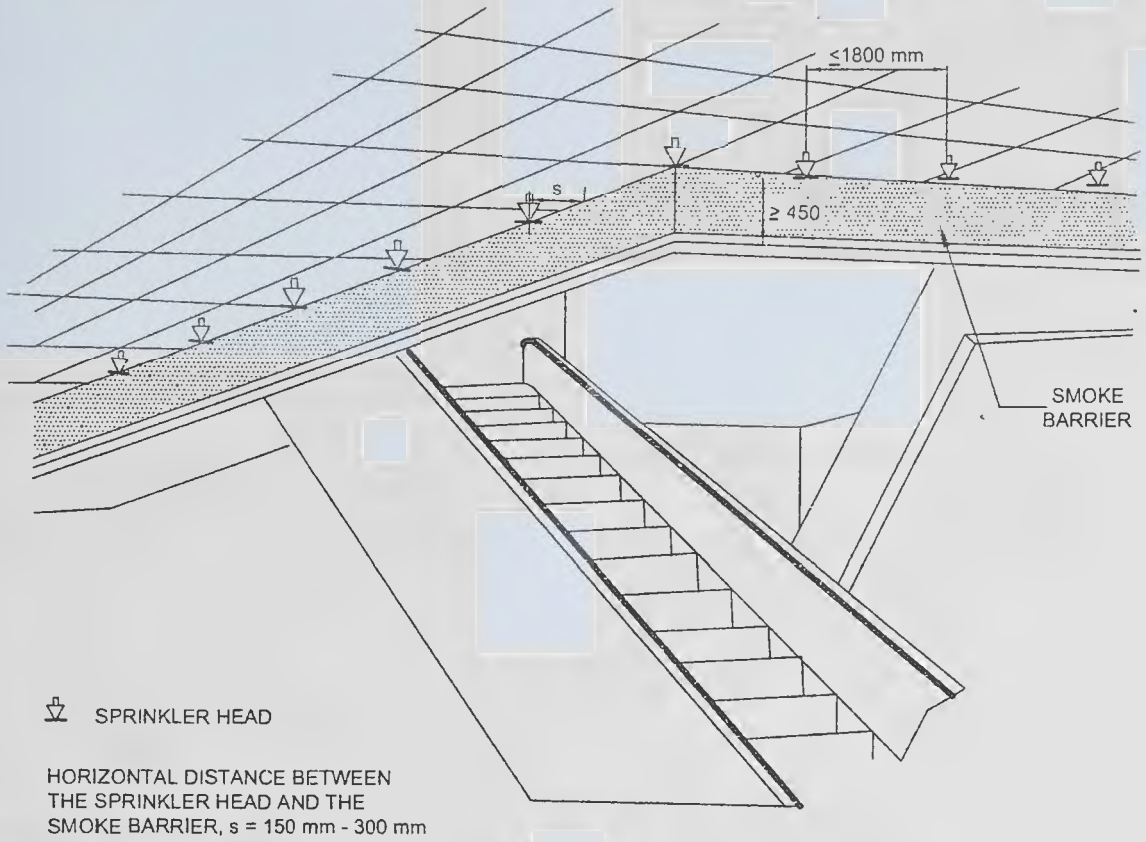

FIG. 3 SPRINKLERS AROUND ESCALATOR OPENING

shall be not less than 120 min. Further, medium and low voltage wiring running in shafts/ducts, shall either be armoured type or run through metal conduits.

The space between the electrical cables/conduits and the walls/slabs shall be filled in by a fire stop material having fire resistance rating of not less than 120 min. This shall exclude requirement of fire stop sealing for low voltage services shaft.

For plumbing shafts in the core of the building, with shaft door opening inside the building, the shafts shall have inspection doors having fire resistance rating not less than 30 min.

For plumbing shafts doors which open in wet areas or in naturally ventilated areas or on external wall of the building, the shafts may not require doors having any specified fire rating.

NOTE — In the case of buildings where it is necessary to lower or lift heavy machinery or goods from one floor to the other, it may be necessary to provide larger openings in the floor. Such openings shall be provided with removable covers which shall have the same strength and fire resistance as the floor.

3.4.5.5 *Refuse chutes*

Refuse chutes, if any provided in a building, shall have opening at least 1 m above roof level for venting purpose and they shall have an enclosure wall of non-combustible material with fire resistance of not less than 120 min. They shall not be located within the staircase enclosure or service shafts, or air conditioning shafts. Refuse chutes inspection panel and doors shall be tight fitting with 60 min fire resistance. Sprinkler protection system shall be provided for the refuse chutes. Refuse chutes shall be at least 6 m away from exits.

3.4.5.6 *Vertical opening*

Every vertical opening between the floors of a building shall be suitably enclosed or protected, as necessary, to provide the following:

a) Reasonable safety to the occupants while using the means of egress by preventing spread of fire, smoke, or fumes through vertical openings from floor to floor to allow occupants to complete their use of the means of egress. Further it shall be ensured to provide a clear height of 2 100 mm in the exit access.

b) Limitation of damage to the building and its contents.

3.4.6 *Electrical Installation*

3.4.6.1 For requirements regarding electrical installations from the point of view of fire safety, reference may be made to good practice [4(6)] and Part 8 'Building Services, Section 2 Electrical and Allied Installations' of the Code.

In general, it is desirable that the wiring and cabling are with flame retardant property. Medium and low voltage wiring running in shafts, and within false ceiling shall run in metal conduit. Any 230 V wiring for lighting or other services, above false ceiling, shall have 660 V grade insulation.

The electric distribution cables/wiring shall be laid in a separate shaft. The shaft shall be sealed at every floor with fire stop materials having the same fire resistance as that of the floor. High, medium and low voltage wiring running in shaft and in false ceiling shall run in separate shaft/conduits.

Water mains, gas pipes, telephone lines, intercom lines or any other service line shall not be laid in the duct for electrical cables; use of bus ducts/solid rising mains instead of cables is preferred.

All metallic items like steel structural members. etc, shall be bonded properly to the earthing system.

3.4.6.2 *Emergency power for fire and life safety systems*

Emergency power supplying distribution system for critical requirement for functioning of fire and life safety system and equipment shall be planned for efficient and reliable power and control supply to the following systems and equipment where provided:

a) Fire pumps.
b) Pressurization and smoke venting; including its ancillary systems such as dampers and actuators.
c) Fireman's lifts (including all lifts).
d) Exit signage lighting.
e) Emergency lighting.
f) Fire alarm system.
g) Public address (PA) system (relating to emergency voice evacuation and annunciation).
h) Magnetic door hold open devices.
j) Lighting in fire command centre and security room.

Power supply to these systems and equipment shall be from normal and emergency (standby generator) power sources with changeover facility. If power supply, is from HV source and HV generation, the transformer should be planned in standby capacity to ensure continuity of power to such systems. Wherever transformers are installed at higher levels in buildings and backup DG sets are of higher voltage rating, then dual redundant cables shall be taken to all transformers. The generator shall be capable of taking starting current of all the fire and life safety systems and equipment as above. Where parallel HV/LV supply from a separate substation fed from different grid is provided with appropriate transformer for emergency, the provision of generator may be waived in consultation with the Authority.

The power supply to the panel/distribution board of these fire and life safety systems shall be through fire proof enclosures or circuit integrity cables or through alternate route in the adjoining fire compartment to ensure supply of power is reliable to these systems and equipment. It shall be ensured that the cabling from the adjoining fire compartment is protected within the compartment of vulnerability. The location of the panel/ distribution board feeding the fire and life safety system shall be in fire safe zone ensuring supply of power to these systems.

Circuits of such emergency system shall be protected at origin by an automatic circuit breaker with its no-volt coil removed. Master switches controlling essential service circuits shall be clearly labelled.

Cables for fire alarm and PA system shall be laid in metal conduits or armoured to provide physical segregation from the power cables.

3.4.6.3 *Substation/Transformers*

Areas in substation shall not be used as storage/dump areas or for other utility purposes other than those required for the functioning of the substation.

The substation area should be adequately ventilated.

An independent, ventilated or air conditioned MV panel room shall be provided on the ground level or first basement. This room shall be provided with access from outside (or through exit passageway accessible from outside). The MV panel room shall be provided with fire resistant walls and doors of fire resistance of not less than 120 min.

If the licensees agree to provide meters on upper floors, the licensees' cables shall be segregated from consumers' cables by providing a partition in the shaft. Meter rooms on upper floors shall not open into staircase enclosures and should be ventilated directly to open air outside or in electrical room of 120 min fire resistant walls.

Electrical MV main distribution panel and lift panels shall be provided with CO_2/inert gas flooding system for all panel compartments with a cylinder located beside the panel.

3.4.6.3.1 *Oil filled substation*

A substation or a switch-station with oil filled equipment shall be limited to be installed in utility building or in outdoor location. Such substation/utility building shall be at least 7 m away from the adjoining building(s).

Substation equipment (exceeding oil capacity of 2 000 litre) in utility building shall have fire rated baffle walls of 240 min rating constructed between such equipment, raised to at least 600 mm above the height of the equipment (including height of oil conservators) and exceeding 300 mm on each side of the equipment.

All transformers where capacity exceeds 10 MVA shall be protected by high velocity water spray systems or nitrogen injection system.

3.4.6.3.2 *Dry type substation*

Transformers located inside a building shall be of dry type and all substation/switch room walls, ceiling, floor, opening including doors shall have a fire resistance

rating of 120 min. Access to the substation shall be provided from the nearest fire exit/exit staircase for the purpose of electrical isolation.

3.4.6.4 *Standby supply*

Diesel generator set(s) shall not be installed at any floor other than ground/first basement. If the same are installed indoors, proper ventilation and exhaust shall be planned. The DG set room shall be separated by 120 min fire resistance rated walls and doors.

The oil tank for the DG sets (if not in the base of the DG) shall be provided with a dyked enclosure having a volumetric capacity of at least 10 percent more than the volume of the oil tank. The enclosure shall be filled with sand for a height of 300 mm.

For detailed information regarding fire safety requirements for hazardous petroleum products, reference may be made to *The Petroleum Act*, 1934 and the Rules framed thereunder.

3.4.6.5 *Lightning protection of buildings*

Routing of down conductors (insulated or uninsulated) of lightning protection through electrical or other service shafts are not allowed as it can create fire and explosion during lightning. For details, *see* Part 8 'Building Services, Section 2 Electrical and Allied Installations' of the Code.

3.4.7 *Escape Lighting and Exit Signage*

Exit access, exits and exit discharge shall be properly identified, with adequate lighting maintained in the elements of the egress systems so that all occupants shall be able to leave the facility safely.

3.4.7.1 *Lighting*

a) The exit, exit access and exit discharge systems shall be illuminated continuously. The floors of the means of egress shall be illuminated at all points, including angles and intersections, in corridors and passageways, stairwells, landings of stairwells and exit.

b) Emergency lighting shall be powered from a source independent of that supplying the normal lighting.

c) Escape lighting shall be capable of,

   1) indicating clearly and unambiguously the escape routes;

   2) providing adequate illumination along such routes to allow safe movement of persons towards and through the exits; and

   3) ensuring that fire alarm call points and firefighting equipment provided along the escape routes can be readily located.

d) The horizontal luminance at floor level on the centreline of an escape route shall not be less than 10 lumen/m^2. In addition, for escape routes up to 2 m wide, 50 percent of the route width shall be lit to a minimum of 5 lumen/m^2. In auditoriums, theatres, concert halls and such other places of assembly, the illumination of floor exit/access may be reduced during period of performances to values not less than 2 lux.

e) Required illumination shall be arranged such that the failure of any single lighting unit, such as the burning out of one luminaire, will not leave any area in darkness and does not impede the functioning of the system further.

f) The emergency lighting shall be provided to be put on within 5 s of the failure of the normal lighting supply. Also, emergency lighting shall be able to maintain the required illumination level for a period of not less than 90 min in the event of failure of the normal lighting even for smaller premises.

g) Battery pack emergency lighting, because of its limited duration and reliability, shall not be allowed to be used in lieu of a diesel engine driven emergency power supply.

h) Escape lighting luminaires should be sited to cover the following locations:

   1) Near each intersection of corridors,

   2) At exits and at each exit door,

   3) Near each change of direction in the escape route,

   4) Near each staircase so that each flight of stairs receives direct light,

   5) Near any other change of floor level,

   6) Outside each final exit and close to it,

   7) Near each fire alarm call point,

   8) Near firefighting equipment, and

   9) To illuminate exit and safety signs as required by the enforcing authority.

   NOTE — For the purpose of this clause 'near' is normally considered to be within 2 m measured horizontally.

j) The luminaires shall be mounted as low as possible, but at least 2 m above the floor level.

k) Signs are required at all exits, emergency exits and escape routes, which should comply with the graphic requirements of the relevant Indian Standards.

3.4.7.2 Exit passageway (at ground) and staircase lighting shall also be connected to alternative supply. The alternative source of supply may be provided by battery continuously trickle charged from the electric mains.

3.4.7.3 Suitable arrangements shall be made by installing double throw switches to ensure that the lighting installed in the staircase and the corridor does not get connected to two sources of supply simultaneously. Double throw switch shall be installed in the service room for terminating the stand-by supply.

The emergency lighting system shall be well maintained by periodical inspections and tests so as to ensure their perfect serviceability at all times.

3.4.7.4 *Exit signage*

Where exit access is provided through corridors/paths, the occupants shall be able to easily identify the way to exits. Exit signs shall be provided such that no point in an exit access is more than 30 m from a visible exit directional sign. An exit sign indicating the direction to an exit shall be provided at all changes in direction.

Exits shall be clearly visible and the route to reach the exits shall be clearly marked and signs posted to guide the occupants of the floor concerned. Signs shall be illuminated and wired to an independent electrical circuit on an alternative source of supply. The sizes and colours of the exit signs shall be in accordance with good practice [4(7)]. The colour of the exit signs shall be green.

NOTE — This provision shall not apply to A-2 and A-4 occupancies less than 15 m in height.

The exit sign with arrow indicating the way to the escape route shall be provided at a suitable height from the floor level on the wall and shall be illuminated by electric light connected to corridor circuits. All exit way marking signs should be so installed that no mechanical damage shall occur to them due to moving of furniture or other heavy equipment. Further, all landings of floor shall have floor indicating boards prominently indicating the number of the floor.

Photo luminescent markings shall be pasted at internal hydrant boxes.

3.4.8 *Air Conditioning, Ventilation and Smoke Control*

3.4.8.1 Air conditioning and mechanical ventilation requirements of different rooms or areas in any occupancy shall be as given in Part 8 'Building Services, Section 1 Lighting and Natural Ventilation' and 'Section 3 Air conditioning, Heating and Mechanical Ventilation' of the Code.

Air conditioning and ventilating systems shall be so installed and maintained as to minimise the danger of spread of fire, smoke or fumes from one floor to other or from outside to any occupied building or structure.

Many high-rise buildings integrate smoke management systems into their conventional HVAC systems. In such installation, it requires special design considerations, including safe and adequate controls, acceptable and documented testing and regular maintenance systems.

Wherever batteries are provided, the same shall be segregated by 120 min fire rated construction. Ventilation to the room shall be provided as per manufacturer's instructions.

3.4.8.2 *Air handling unit*

3.4.8.2.1 From fire safety point of view, separate air handling units (AHU) for each floor shall be provided so as to avoid the hazards arising from spread of fire and smoke through the air conditioning ducts. The air ducts shall be separate from each AHU to its floor and in no way shall interconnect with the duct of any other floor. Within a floor it would be desirable to have separate air handling unit provided for each compartment.

Air handling unit shall be provided with effective means for preventing circulation of smoke through the system in the case of a fire in air filters or from other sources drawn into the system, and shall have smoke sensitive devices for actuation in accordance with the accepted standard [4(8)] and control.

3.4.8.2.2 Shafts or ducts, if penetrating multiple floors, shall be of masonry construction with fire damper in connecting ductwork or shall have fire rated ductwork with fire dampers at floor crossing. Alternatively, the duct and equipment may be installed in room having walls, doors and fire damper in duct exiting/entering the room of 120 min fire resistance rating. Such shafts and ducts shall have all passive fire control meeting 120 min fire resistance rating requirement to meet the objective of isolation of the floor from spread of fire to upper and lower floors through shaft/duct work.

NOTE — Zoned and compartmented HVAC systems are encouraged with an approach to avoid common exhaust shafts and fresh air intake shafts which will limit the requirement of such passive measure and fire rated duct work and dampers.

3.4.8.2.3 The air filters of the air handling units shall be made of non-combustible materials.

3.4.8.2.4 The air handling unit room shall not be used for storage of any combustible materials.

3.4.8.3 *Duct work*

3.4.8.3.1 Air ducts serving main floor areas, corridors, etc, shall not pass through the exits/exit passageway/ exit enclosure. Exits and lift lobbies, etc, shall not be used as return air passage.

3.4.8.3.2 As far as possible, metallic ducts shall be used even for the return air instead of space above the false ceiling.

3.4.8.3.3 Wherever the ducts pass through fire walls or floors, the opening around the ducts shall be sealed

with materials having fire resistance rating of the compartment. Such duct shall also be provided with fire dampers at all fire walls and floors unless such ducts are required to perform for fire safety operation; and in such case fire damper may be avoided at fire wall and floor while integrity of the duct shall be maintained with 120 min fire resistance rating to allow the emergency operations for fire safety requirements.

3.4.8.3.4 The ducting within compartment would require minimum fire resistance rating of 30 min. Such ducting material in substantial gauge shall be in accordance with good practice [4(9)]. If such duct crosses adjacent compartment/floor and not having fire dampers in such compartment/floor, it would require fire resistance duct work rating of 120 min. The requirements of support of the duct shall meet its functional time requirement as above.

3.4.8.3.5 The materials used for insulating the duct system (inside or outside) shall be of non-combustible type. Any such insulating material shall not be wrapped or secured by any material of combustible nature.

3.4.8.3.6 Inspection panels shall be provided in the ductwork to facilitate the cleaning accumulated dust in ducts and to obtain access for maintenance of fire dampers.

3.4.8.4 *Fire or fire/smoke dampers*

3.4.8.4.1 These dampers shall be evaluated to be located in supply air ducts, fresh air and return air ducts/ passages at the following points:

a) At the fire separation wall,
b) Where ducts/passages enter the vertical shaft,
c) Where the ducts pass through floors, and
d) At the inlet of supply air duct and the return air duct of each compartment on every floor.

3.4.8.4.2 Damper shall be of motorized type/fusible link. Damper shall be so installed to provide complete integrity of the compartment with all passive fire protection sealing. Damper should be accessible to maintain, test and also replace, if so required. Damper shall be integrated with Fire Alarm Panel and shall be sequenced to operate as per requirement and have interlocking arrangement for fire safety of the building. Manual operation facilities for damper operation shall also be provided.

3.4.9 *Heating*

3.4.9.1 Installation of chimney and heating apparatus shall be in accordance with good practice [4(10)].

3.4.9.2 *Boiler rooms*

3.4.9.2.1 Provisions of boiler and boiler rooms shall conform to *The Boilers Act*, 1923.

3.4.9.2.2 Further, the following additional aspects may be taken into account in the location of boiler room:

a) The boilers shall be installed in a fire resisting room of 180 min fire resistance rating.
b) Entry to this room shall be provided with a composite door of 120 min fire resistance rating.
c) The boiler room shall be provided with its dedicated natural or mechanical ventilation system. Mechanical ventilation system for the boiler room would be accepted with 120 min fire resistance rating ductwork, if it has interface with other mechanical areas. Ventilation system should not be allowed to be routed through electrical room area or through exit corridor/exits.
d) The oil tank for the boiler shall be provided with a dyked enclosure having a volumetric capacity of at least 10 percent more than the volume of the oil tank. The enclosure shall be filled with sand for a height of 300 mm.

3.4.10 *Glazing*

3.4.10.1 The glazing shall be in accordance with Part 6 'Structural Design, Section 8 Glass and Glazing' of the Code. The entire glazing assembly shall be rated to that type of construction as given in Table 1. This shall be applicable along with other provisions of this Part related to respective uses as specified therein. The use of glass shall not be permitted for enclosures of exits and exit passageway.

3.4.10.2 Glass facade shall be in accordance with the following:

a) For fully sprinklered buildings having fire separation of 9 m or more, tempered glass in a non-combustible assembly, with ability to hold the glass in place, shall be provided. It shall be ensured that sprinklers are located within 600 mm of the glass facade providing full coverage to the glass.

NOTE — In case of all other buildings, fire resistance rating of glass facade shall be in accordance with Table 1.

b) All gaps between floor-slabs and facade assembly shall be sealed at all levels by approved fire resistant sealant material of equal fire rating as that of floor slab to prevent fire and smoke propagation from one floor to another.

c) Openable panels shall be provided on each floor and shall be spaced not more than 10 m apart measured along the external wall from centre-to-centre of the access openings. Such openings shall be operable at a height between 1.2 m and 1.5 m from the floor, and shall be in

the form of openable panels (fire access panels) of size not less than 1 000 mm × 1 000 mm opening outwards. The wordings, 'FIRE OPENABLE PANEL — OPEN IN CASE OF FIRE, DO NOT OBSTRUCT' of at least 25 mm letter height shall be marked on the internal side. Such panels shall be suitably distributed on each floor based on occupant concentration. These shall not be limited to cubicle areas and shall be also located in common areas/corridors to facilitate access by the building occupants and fire personnel for smoke exhaust in times of distress.

3.4.11 *Surface Interior Finishes*

3.4.11.1 The use of combustible surface finishes on walls (including facade of the building) and ceilings affects the safety of the occupants of a building. Such finishes tend to spread the fire and even though the structural elements may be adequately fire resistant, serious danger to life may result. It is, therefore, essential to have adequate precautions to minimise spread of flame on wall, facade of building and ceiling surfaces. The finishing materials used for various surfaces and decor shall be such that it shall not generate toxic smoke/fumes.

3.4.11.2 The susceptibility of various types of wall surfaces to fire is determined in terms of the rate of spread of flame. Based on the rate of spread of flame, surfacing material shall be considered as divided into four classes as follows {*see also* good practice [4(11)]}:

a) Class 1 Surfaces of very low flame spread.
b) Class 2 Surfaces of low flame spread.
c) Class 3 Surfaces of medium flame spread.
d) Class 4 Surfaces of rapid flame spread.

3.4.11.3 The uses for which surface materials falling into various classes shall be adopted in building construction are given below:

Class 1 (1)	*Class 2* (2)	*Class 3* (3)
May be used in any situation	May be used in any situation, except on walls, facade of the building, staircase and corridors	May be used only in living rooms and bed rooms (but not in rooms on the roof) and only as a lining to solid walls and partitions; not on staircases or corridors or facade of the building.

NOTE — Panelling (lining) shall be permitted in a limited area. It shall not be permitted in a vestibule.

3.4.11.4 Materials of Class 4 which include untreated wood fiberboards may be used with due fire retardant treatment as ceiling lining, provided the ceiling is at least, 2.4 m from the top surface of the floor below, and the wall surfaces conform to requirements of class [*see* Note *under* **3.4.11.3**]. Class 4 materials shall not be used in kitchens, corridors and staircases. Some materials contain bitumen and, in addition to risk from spread of fire, emit dense smoke on burning; such materials shall be excluded from use under these conditions and shall also not be used for construction of ceiling where the plenum is used for return air in air conditioned buildings.

3.4.11.5 When frames, walls, partitions or floors are lined with combustible materials, the surfaces on both sides of the materials shall conform to the appropriate class, because there is considerable danger from fire starting and rapidly spreading within the concealed cavity unknown to the occupants whose escape may be hampered thereby. For detailed information on materials and details of construction with their fire resistance rating, reference may be made to good practice [4(12)].

3.4.12 *Fire Command Centre (FCC)*

a) Fire command centre shall be on the entrance floor of the building having direct access. The control room shall have the main fire alarm panel with communication system (suitable public address system) to aid floors and facilities for receiving the message from different floors.

b) Fire command centre shall be constructed with 120 min rating walls with a fire door and shall be provided with emergency lighting. Interior finishes shall not use any flammable materials. All controls and monitoring of fire alarm systems, pressurization systems, smoke management systems shall happen from this room. Monitoring of integrated building management systems, CCTVs or any other critical parameters in building may also be from the same room.

c) Details of all floor plans along with the details of firefighting equipment and installations (2 sets laminated and bound) shall be maintained in fire command centre.

d) The fire staff in charge of the fire command centre shall be responsible for the maintenance of the various services and firefighting equipment and installations in coordination with security, electrical and civil staff of the building.

4 LIFE SAFETY

4.1 General

Every building shall be so designed, constructed, equipped, maintained and operated as to provide adequate means of egress to avoid undue danger to the life and safety of the occupants from fire, smoke, fumes or panic during the time period necessary for escape.

For high occupancy areas, it may be required to have annunciation, announcements and voice guided/aided system to direct the occupants towards safe egress routes, areas of comparative safety or exits, and to avoid situation of panic during distress.

Every main occupancy may have certain occupancies which may be incidental to the main occupancy. The exit requirements pertaining to such incidental occupancies from the floor of the occupancy to the level of exit discharge shall be calculated to meet the requirement of the actual occupancy of such type, to ensure adequate means of egress of the occupants.

See also **13** of Part 3 'Development Control Rules and General Building Requirements' of the Code for accessibility for elderly and persons with disabilities, for various requirements for enabling a smooth and safe egress.

4.2 General Exit Requirements

4.2.1 An exit may be a fire exit doorway; an internal staircase, exit passageway, external doorway, external staircase and these having access to the street or to a *Veranda* or to a refuge area or to the terrace or roof of a building. An exit may also include a horizontal exit leading to an adjoining building/fire compartment having its further access to unlocked/public exit at the same level.

4.2.2 Unless otherwise specified, lifts, escalators, moving walks and revolving doors shall not be considered as exits and shall not constitute any part of the required exit.

4.2.3 Every exit, exit passageway and exit discharge shall be continuously maintained free of all obstructions or impediments to full use in the case of fire or other emergency.

4.2.4 Every building having human occupancy shall be provided with exits sufficient to permit safe egress of occupants, in case of fire or other emergency.

4.2.5 In every building or structure, exits shall comply with the minimum requirements of this Part, except those not accessible for general public use.

4.2.6 No building shall be so altered as to reduce the number, width or protection of exits to less than that required.

4.2.7 For non-naturally ventilated areas, fire doors with 120 min fire resistance rating shall be provided and particularly at the entrance to lift lobby and stair well where a 'funnel or flue effect' may be created, inducing an upward spread of fire, to prevent spread of fire and smoke.

4.2.8 Exits shall be so arranged that they may be reached without passing through another occupied unit/passage in others control, if they pose challenge or restriction in means of egress.

4.2.9 Doors in exits shall open in the direction of exit. In case of assembly buildings (Group D) and institutional buildings (Group C-1), exit door shall not open immediately upon a flight of stair and all such entries to the stair shall be through a landing, so that such doors do not impede movement of people descending from a higher floor when fully opened (*see* Fig. 4A). While for other occupancies, such doors shall not reduce the pathway in the landing by more than half the width of such staircase (*see* Fig. 4B). Overhead or sliding doors shall not be installed.

4.2.10 At least half of the required exit stairs from upper floors (rounded to the next higher number) shall discharge directly to the exterior or through exit passageways.

4.2.11 Unless otherwise specified, all the exits and exit passageways to exit discharge shall have a clear ceiling height of at least 2.4 m. However, the height of exit door shall be at least 2.0 m (*see* Fig. 5).

4.2.12 Where changes in elevation of more than 300 mm are encountered in the exits, ramps or sloped surfaces shall be used with handrails and floor finish materials that contrast with the adjacent finish materials.

4.2.13 The capacity of the means of egress required from any storey of the building shall not be reduced along the path of egress travel until arrival to the exit discharge.

4.2.14 The lifts, escalators, moving walks, turnstiles and revolving doors shall not be considered in determining the required capacity of means of egress for the individual floor(s) or the building.

4.2.15 Turnstiles or similar devices that restrict travel to one direction or that are used to restrict unauthorized entry shall not be so placed as to obstruct any required means of egress. Alternative door openings of required exit width shall be available within 3 m of such devices, if installed.

4.2.16 Suitable means shall be provided so that all access controlled exit doors, turnstiles, boom barriers and other such exits shall automatically operate to open mode during emergencies like fire, smoke, acts of

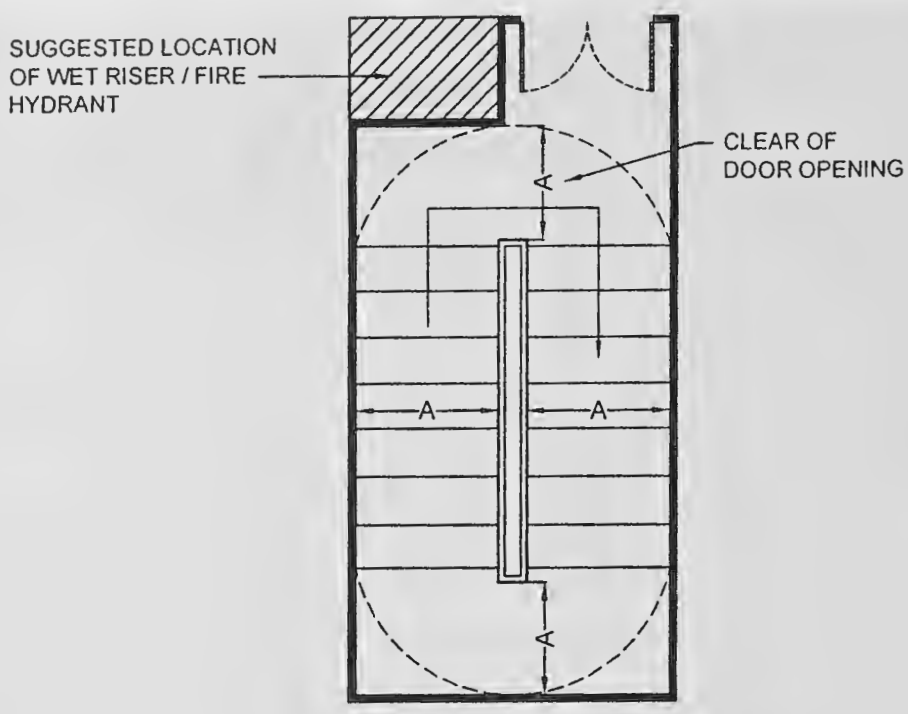

NOTE — Door width shall be based on type of occupancy.

4A MINIMUM REQUIRED UNOBSTRUCTED CLEARANCE WITH DOOR LEAF ENCROACHING ON LANDING IN INSTITUTIONAL AND ASSEMBLY BUILDINGS

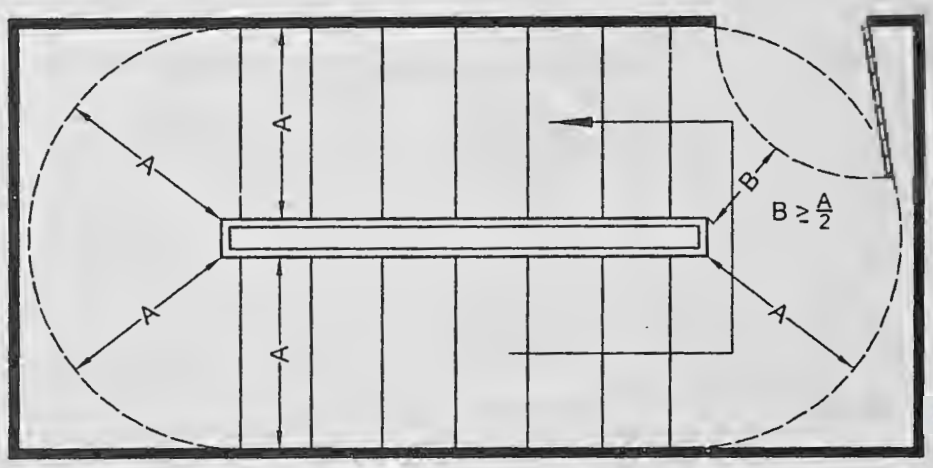

A - REQUIRED WIDTH

4B MINIMUM REQUIRED UNOBSTRUCTED CLEARANCE WITH DOOR LEAF ENCROACHING ON LANDING

FIG. 4 DOOR LOCATION AT LANDING IN FIRE EXITS

terrorism, etc, so that people can safely and quickly egress into safe areas outside. If required, a master controlling device may be installed at a strategic location to achieve this.

4.2.17 Penetrations into and openings through an exit are prohibited except those necessary like for the fire protection piping, ducts for pressurization and similar life safety services. Such openings as well as vertical passage of shaft through floors shall be protected by passive systems.

4.2.18 Walking surfaces in exit access shall comply with the following requirements for smooth exit:

a) Walking surfaces shall be nominally level.

b) The slope of walking surface in the direction of travel shall not exceed 1 in 20 unless the ramp requirements are met (*see* **4.4.2.4.3.5**).

c) Slope perpendicular to the direction of travel shall not exceed 1 in 48.

d) Walking surfaces shall be slip-resistant along the entire path of travel.

4.2.19 *Basement*

a) Basement exits shall be sufficient to provide for the capacity of the basement as determined in accordance with **4.4.2.1**. In no case shall there be less than two independent basement exits.

b) Basements having incidental occupancies to main occupancy shall be planned with exit requirements of the basements for the actual occupancy within the basement.

c) Where basement is used for car parking and also there is direct approach from any

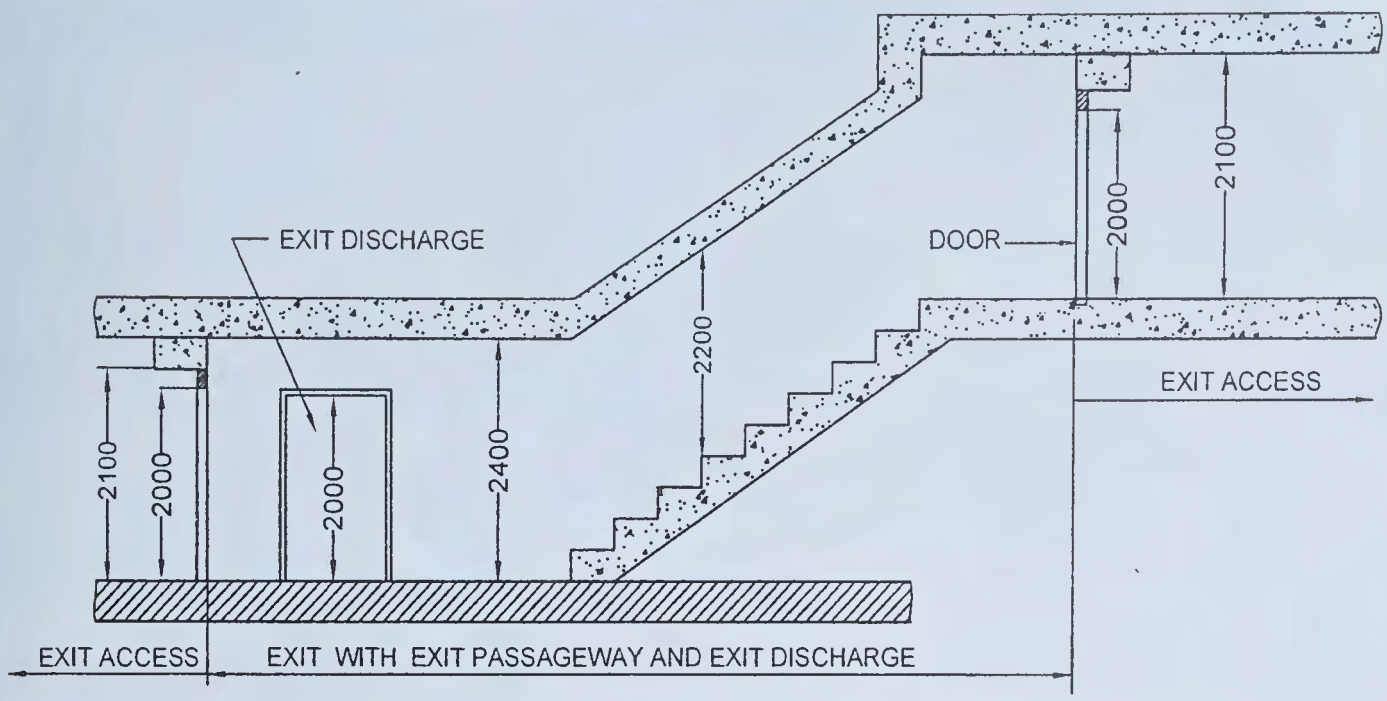

FIG. 5 MINIMUM HEAD ROOM MEASUREMENT

occupancy above to the basement, door openings leading to the basement shall need to be protected with fire doors with 120 min fire rating, except for exit discharge doors from the basements.

4.3 Occupant Load

For determining the exits required, the number of persons within any floor area or the occupant load shall be based on the actual number of occupants declared, but in no case less than that specified in Table 3. The occupant load of a mezzanine floor discharging to a floor below shall be added to that floor occupancy and the capacity of the exits shall be designed for the total occupancy load thus established.

The occupant load of each story considered individually

Table 3 Occupant Load
(*Clauses* 4.3 *and* 4.4.2.1)

Sl No.	Group of Occupancy	Occupant Load Factor (m^2/person) (*see* Note 1)
(1)	(2)	(3)
i)	Group A: Residential	12.50
ii)	Group B: Educational	4.00
iii)	Group C: Institutional (*see* Note 2):	
	a) Indoor patients area	15.00
	b) Outdoor patients area	10.0
iv)	Group D: Assembly:	
	a) Concentrated use without fixed seating	0.65
	b) Less concentrated use without fixed seating (*see* Note 3)	1.40
	c) Fixed seating	*see* Note 4
	d) Dining areas and restaurants with seating and table	1.80
v)	Group F: Mercantile:	
	a) Street floor and sales basement	3.00
	b) Upper sales floor	6.00
	c) Storage/warehouse, receiving and the like	20.00
vi)	Group E: Business	10.00
vii)	Group G: Industrial	10.00
viii)	Group H: Storage (*see* Note 5)	30.00
ix)	Group J: Hazardous	10.00

NOTES

1 Gross area shall be the floor area as defined in **2.35.** All factors expressed are in gross area unless marked net.

2 Occupant load in dormitory portions of homes for the aged, orphanages, insane asylums, etc, where sleeping accommodation is provided, shall be calculated at not less than 7.5 m^2 gross floor area/person.

3 These shall include gymnasium, table tennis room, billiard room and other gaming rooms, library, swimming pool and like.

4 In case of assembly occupancy having fixed seats, the occupant load shall be determined by multiplying the number of seats by 1.2.

5 Car parking areas under occupancy other than storage shall also be 30 m^2 per person.

shall be required to be used in computing the number of means of egress at each story, provided that the required number of means of egress is not decreased in the direction of egress travel.

The assembly occupancies and call centres shall be required to display, limiting occupant load details positioned in a conspicuous place near the entrance of each of such respective occupancy to avoid possible overcrowding and overloading. The display shall preferably be engraved on a metal plate of not less than 300 mm × 200 mm, with letters of height and width not less than 50 mm, with detail of occupancy, area and occupancy load (*see* figure below).

The capacity of any open mezzanine/balcony shall be added to the capacity of the floor below for the purpose of determining exit capacity.

MAXIMUM OCCUPANCY

____ PERSONS PERMITTED WITHIN THIS SPACE/ROOM

IT IS CONFIRMED THAT THE FIRE EXITS ARE PLANNED FOR EGRESS OF THE OCCUPANCY AS MENTIONED ABOVE AND OCCUPANCY MORE THAN THE ABOVE IS NOT PERMITTED IN THE SPACE/ROOM AS FOLLOWS:

SPACE/ROOM DETAIL: _____

FLOOR NO. _____

SIGN: _____ DATE: _____

(MANAGER/AUTHORIZED SIGNATORY)

4.4 Egress Components

Egress components to be considered are the number of exits to which access is provided, capacity of exit access, travel distance to an exit, the obviousness of the direction to an exit, and any hindrance including due to security issues involved.

4.4.1 *Exit Access*

a) A common path of travel is desirable in exit access which leads to two independent directions to separate exits.

b) *Capacity of exit access* — The width of corridors, aisles or ramps required for exit access shall be sufficient to ensure a smooth flow of occupants to the exit. Where a corridor is the only way of access to an exit, the corridor width shall not be less than the calculated exit width.

c) Objects like tables, chairs or any other temporary/permanent structures in exit access corridors shall be avoided as this may result in congestion and also impeding smooth flow of personnel during emergencies.

d) In order to ensure that each element of the means of egress can be effectively utilized, they shall all be properly lit and marked. Lighting shall be provided with emergency power back-up in case of power failures. Also, exit signs of adequate size, marking, location, and lighting shall be provided so that all those unfamiliar with the location of the exits may safely find their way.

e) Exit access to fireman's lift and refuge area on the floor shall be step free and clearly signposted with the international symbol of accessibility.

f) Exit access shall not pass through storage rooms, closets or spaces used for similar purpose.

g) The calculation of capacity of exit access shall be in accordance with **4.4.2.4**.

4.4.2 *Exits*

4.4.2.1 *Number of exits*

The minimum required number of exits in a building shall be determined based on occupant load (*see* Table 3) and width required per person (*see* Table 4) as appropriate to the type of exit for respective occupancies, subject to complying with maximum travel distance requirement (*see* Table 5).

4.4.2.2 *Arrangement of exits*

a) Exits shall be so located that the travel distance on the floor shall not exceed the distance given in Table 5.

b) Travel distance shall be measured from the most remote point within a storey or a mezzanine floor along the natural and un-obstructed path of horizontal or vertical egress travel to the door to an exit.

c) The dead end corridor length in exit access shall not exceed 6 m for educational, institutional and assembly occupancies. For other occupancies, the same shall be 15 m (*see* Fig. 6)

d) Exits shall be placed as remote from each other as possible and shall be arranged to provide direct access in separate directions from any point in the area served.

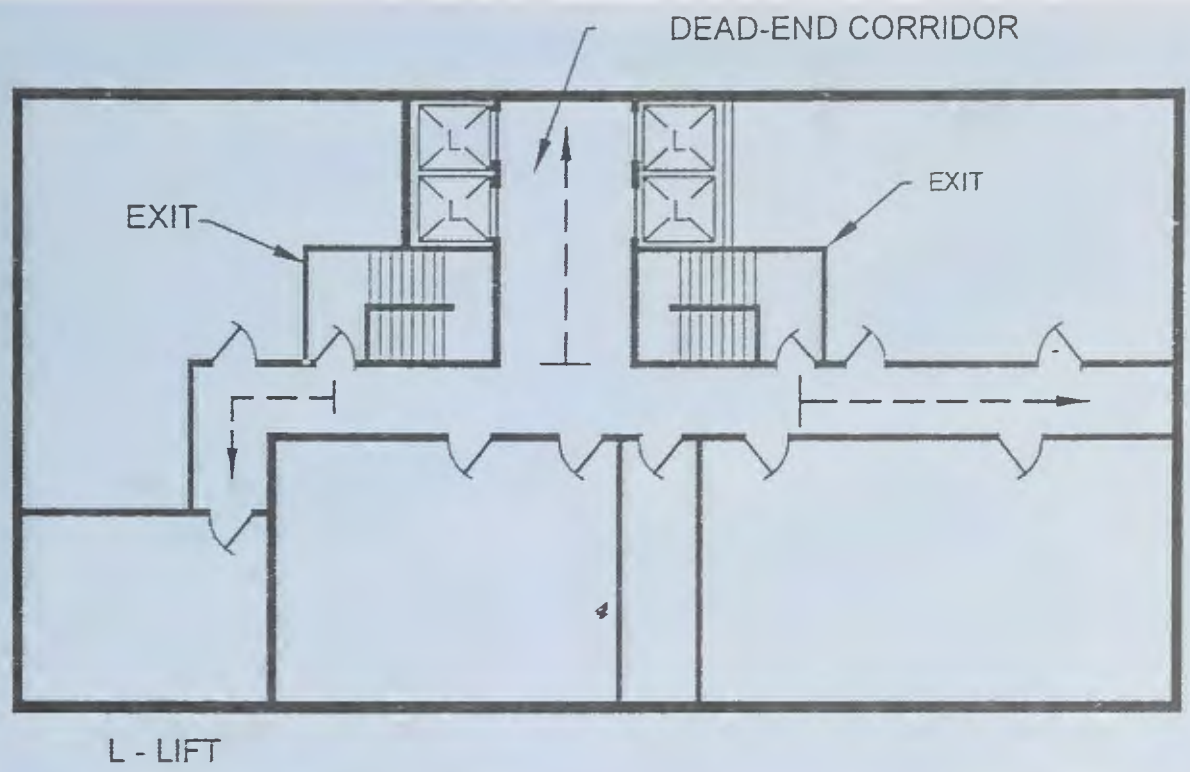

FIG. 6 DEAD END CORRIDOR

4.4.2.3 *Capacities of means of egress*

a) Exit capacity is the number of people that can pass through a stairway, and level components (door and corridor) and ramps. The total capacity of all the respective means of egress serving a floor shall be sufficient to allow egress of the entire population of the floor.

b) The unit of exit width, used to measure the capacity of any exit, shall be 500 mm. A clear width of 250 mm shall be counted as an additional half unit. Clear widths less than 250 mm shall not be counted for exit width.

c) Width per person for stairways, and level components and ramps shall be determined using the capacity factors in accordance with Table 4.

Table 4 Capacity Factors
[*Clauses* 4.4.2.1, 4.4.2.3(c) *and* 4.4.2.4.2(a)]

Sl No.	Occupancy Group		Width per Person mm	
			Stairways	Level Components and Ramps
(1)	(2)		(3)	(4)
i)	Residential	(Group A)	10	6.5
ii)	Educational	(Group B)		
iii)	Institutional	(Group C)	15	13
iv)	Assembly	(Group D)	10	6.5
v)	Business	(Group E)		
vi)	Mercantile	(Group F)		
vii)	Industrial	(Group G)		
viii)	Storage	(Group H)		
ix)	Hazardous	(Group J)	18	10

For example, if an exit doorway measures 1 000 mm in clear width, it would be defined as providing exit capacity for 1 000/6.5 occupants, that is, 153 persons (say 150 persons) and number of such exit doorways can then be calculated depending on the occupant load.

d) When calculating stairways, level components and ramps and other exit means, the capacity of the entire system shall have to be based upon the minimum capacity available from any part of the system. The corridor, if so provided shall also to be planned with consideration of exit access adequacy for the number of occupants. Further, consider the situation of doors opening to an exit stairway. If the stairway provides an exit capacity of 150 persons, and the doors leading into the stairway provide an exit capacity of 153 persons, the overall exit system would be considered to provide the minimum exit capacity of only 150 persons afforded by the stairway. The exit planning will be limited by the most restrictive exit calculation under the means of egress.

e) In the procedures for determining required egress capacity, the number of required means of egress is based on a floor-by-floor consideration, rather than the accumulation of the occupant loads of all the floors. However, the number of means of egress cannot decrease as an occupant proceeds along the egress path.

4.4.2.4 *Types of exit access and exits*

Various types of exit access and exits are doorways, corridors and passageways, horizontal exits, internal

Table 5 Travel Distance (Based on Occupancy and Construction Type)
(*Clauses* 4.4.2.1 *and* 4.4.2.2)

Sl No.	Occupancy Group	Maximum Travel Distance m	
		Types 1 and 2	Types 3 and 4
(1)	(2)	(3)	(4)
i)	Residential (Group A)	30.00	22.50
ii)	Educational (Group B)	30.00	22.50
iii)	Institutional (Group C)	30.00	22.50
iv)	Assembly (Group D)	30.00	30.00
v)	Business (Group E)	30.00	30.00
vi)	Mercantile (Group F)	30.00	30.00
vii)	Industrial (Group G)		
	G-1, G-2	45.00	*See* Note 3
	G-3	22.50	
viii)	Storage (Group H)	30.00	
ix)	Hazardous (Group J)	22.50	

NOTES

1 For fully sprinklered building, the travel distance may be increased by 50 percent of the values specified.

2 Ramp shall not be counted as an exit in case of basements below the first basement in car parking.

3 Construction of Type 3 or Type 4 is not permitted.

staircases, exit passageways, external staircases and ramps.

Requirements for each are as detailed below.

4.4.2.4.1 *Doorways*

a) Every exit doorway shall open into an enclosed stairway or a horizontal exit of a corridor or passageway providing continuous and protected means of egress (*see* Fig. 7 on unaccepted arrangement of doors in a stair).

b) No exit doorway shall be less than 1 000 mm in width except assembly buildings, where door width shall be not less than 2 000 mm (*see* Fig. 8). Doorways shall be not less than 2 000 mm in height.

c) Exit doorways shall be operable from the side which they serve, without the use of a key.

d) Mirrors shall not be placed on exit doors and in exits to avoid confusion regarding the direction of exit.

e) Revolving doors can be accepted as a component in a means of egress where the following requirements are fully complied with:

   1) Doors shall be capable of collapsing to a book fold position with parallel egress paths, of width not less than 1 000 mm.

   2) Doors shall not be located within 3 m of the foot or top of stairs or escalators. A dispersal area shall be provided between the stairs or escalators and the doors.

   3) Each revolving door shall be provided with a hinged door in the same wall within 3 m thereof, with same exiting capacity.

   4) Each revolving door shall be considered as capable of exiting only 50 persons.

f) All fire rated doors and assembly shall be provided with certificate and labels prominently indicating the manufacturer's identification, door details covering door type, serial/batch number, month and year of manufacture, fire resistance rating, etc. The doors and assembly shall be certified with all prescribed hardware such as hinges, locks, panic bars, door closer, and door viewers.

g) *Access controlled doors* — Access controlled doors and electromagnetic doors shall fall under this category. These shall meet the following requirements:

   1) Doors shall have fire rating as per the requirements at the location of installation.

   2) Activation of the building automatic sprinkler or fire detection system, if provided, shall automatically unlock the doors in the direction of egress, and the doors shall remain unlocked until the automatic sprinkler system or fire-alarm system has been manually reset.

   3) Loss of power to the part of the access control system that locks the doors shall automatically unlock the doors in the direction of egress.

   4) A manual release device shall be provided in the readily accessible vicinity of the egress door with a signage 'PUSH TO EXIT' and when the same is operated, it shall result in direct interruption of power to the lock, independent of the access control system electronics.

h) *Turnstiles* — Turnstiles or similar devices that restrict travel to one direction or are used to collect fares or admission charges shall not be placed so as to obstruct any required means of egress unless door openings of required width are available within 3 m thereof.

   Turnstiles or such similar devices shall also be disengaged through automatic or manual intervention to allow egress in the direction of exit.

j) Doors in folding partition shall not be treated as approved means of egress.

4.4.2.4.2 *Corridors and passageways of means of egress*

a) Corridors and passageways shall be of width not less than the calculated aggregate width

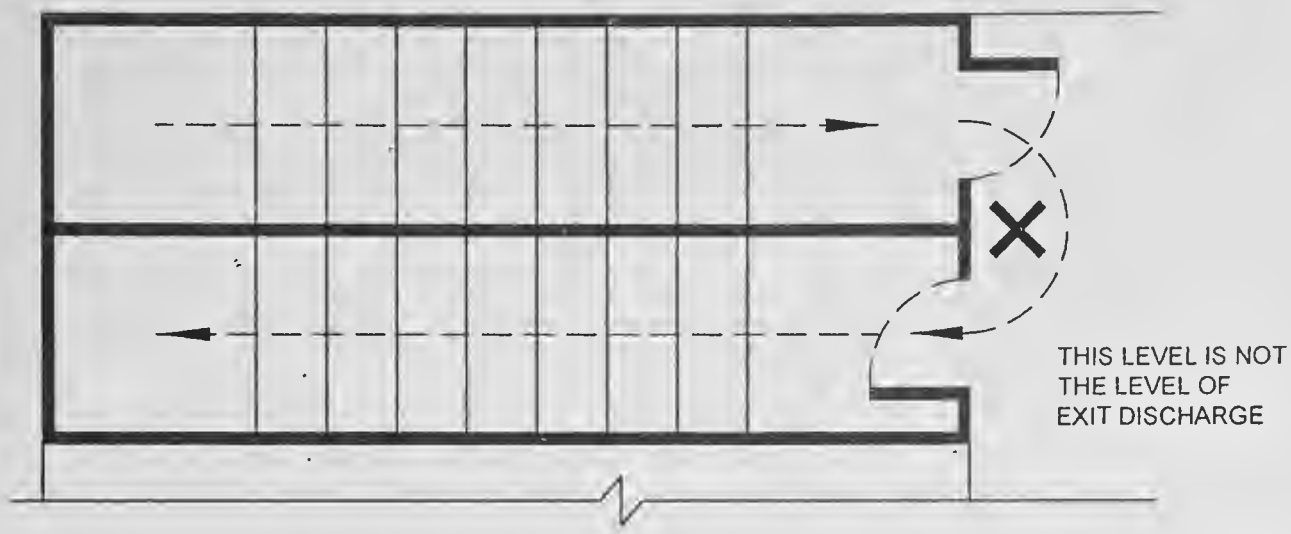

FIG. 7 UNACCEPTABLE ARRANGEMENT FOR ENCLOSING A STAIR SERVING AS A REQUIRED EXIT

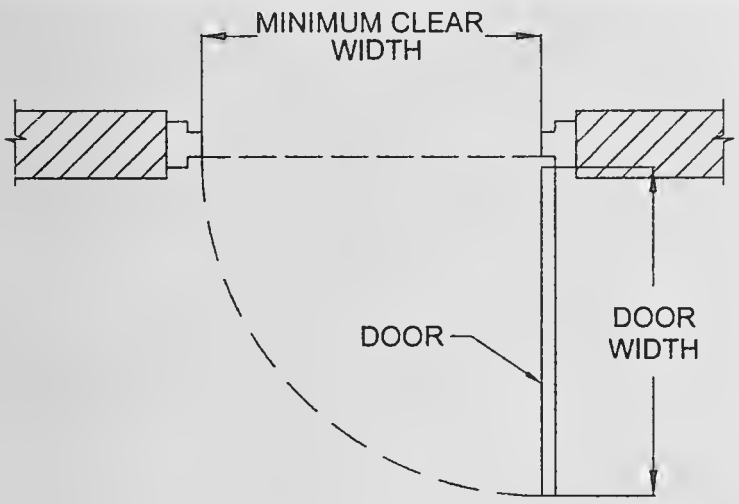

FIG. 8 MINIMUM CLEAR DOOR WIDTH

of exit doorways leading from them in the direction of travel to the exit (*see* Table 4 and Table 5).

b) In the case of buildings where there is a central corridor, which is part of exit access, the doors of rooms (except for rooms having assembly occupancy) shall open inwards to permit smooth flow of traffic in the corridor.

4.4.2.4.3 *Staircases*

4.4.2.4.3.1 *General*

The requirements of number of staircases shall supplement the requirement of different occupancies in **6.1** to **6.9**.

All buildings, as mentioned in **1.2**, shall have a minimum of two staircases. The actual number of staircases shall comply with the requirement of **4.4.2.1**.

All exit staircases shall discharge, at the level of exit discharge, to the exit discharge, either,

a) directly, or
b) through an exit passageway, or
c) through a large lobby.

At least 50 percent of the staircases shall discharge as per (a) and/or (b) above.

The minimum width of tread without nosing shall be 250 mm for staircase of residential buildings. This shall be minimum 300 mm for assembly, hotels, educational, institutional, business and other buildings. The treads shall be constructed and maintained in a manner to prevent slipping. The maximum height of riser shall be 190 mm for staircase of residential buildings (A-2) and 150 mm for other buildings. The number of risers shall be limited to 12 per flight.

The staircases may be internal staircases or external staircases.

4.4.2.4.3.2 *Internal staircases*

The internal staircases may be constructed with an external wall, or otherwise, and shall comply with the following:

a) Internal stairs shall be constructed of non-combustible materials throughout, and shall have fire resistant rating of minimum 120 min.
b) A staircase shall not be arranged round a lift shaft.
c) Exits shall not be used as a portion of a supply, return or exhaust air system serving adjoining areas. Any opening(s) shall not be permitted in walls or in doors, separating exits from adjoining areas.
d) No flue chimney, electromechanical equipment, air conditioning units, gas piping or electrical panels shall be allowed in the stairway.
e) Notwithstanding the detailed provision for exits in accordance with **4.2** and **4.3**, the following minimum width shall be provided for staircases for respective occupancies:

1) Residential (A-2) : 1.00 m

NOTE — For row housing with 2 storeys, the minimum width shall be 0.75 m.

2) Residential (A-1, A-3 and A-4) : 1.25 m

3) Residential hotel (A-5 and A-6) : 1.50 m

4) Assembly : 2.00 m

NOTE — The width of stairs may be accepted to be 1.50 m in case of assembly occupancy having less than 150 persons.

5) Educational : 1.50 m

6) Institutional : 2.00 m

7) All other occupancies : 1.50 m

f) A handrail shall be provided on one side of the staircase of width less than 1 500 mm, and on both sides of the staircase of width 1 500 mm and more. The projection of handrail(s) in the staircase width shall not be more than 115 mm. All other requirements of handrail shall be in accordance with Part 3 'Development Control Rules and General Building Requirements' of the Code.

g) Handrails may project inside the measured width by not more than 90 mm.

h) The design of staircase shall also take into account the following:

1) The minimum headroom in a passage under the landing of a staircase and under the staircase shall be 2.2 m

2) Access to exit staircase shall be through a fire door of a minimum 120 min fire resistance rating.

3) No living space, store or other fire risk shall open directly into staircases.

4) The exit (including staircases) shall be continuous from refuge floors or terrace level, as applicable, to the level of exit discharge.

5) No electrical shafts/air conditioning ducts or gas pipes, etc, shall pass through or open in the staircases.

6) Lifts shall not open in staircase.

7) No combustible material shall be used for decoration/wall panelling in the staircase.

8) Beams/columns and other building features shall not reduce the head room/ width of the staircase.

9) The floor indication board, indicating the location/designated number of staircase, respective floor number and direction to exit discharge shall be placed inside the staircase, on the wall nearest to the fire door. It shall be of size not less than 300 mm × 200 mm (*see* Fig. 9).

10) Individual floors shall be prominently indicated on the wall outside the staircase and facing it.

11) All staircase shall terminate at the level of exit discharge. The access to the basement shall be by a separate staircase.

12) Scissors type staircases shall not be treated as part of exit.

4.4.2.4.3.3 *Curved stairs*

Curved stairs shall not be treated as part means of egress. However, these may be used as part of exit access provided the depth of tread is not less than 280 mm at a point 350 mm from the narrower end of the tread and the smallest radius is not less than twice the stair width.

4.4.2.4.3.4 *External staircases*

The external staircases are the staircases provided on the external wall/facade, and shall comply with the following:

a) External stairs shall always be kept in sound and usable condition.

b) All external stairs shall be directly connected to the ground.

c) Entrance to the external stairs shall be separate and remote from the internal staircase.

d) Where an external staircase is provided, it shall be ensured that the use of it at the time of fire is not prejudiced by smoke and flame from openings (for example, windows, doors) in the external face of the building. Care shall be taken to ensure that no external wall or window opening opens on to or close to an external stair. If such openings exists within 3 m from an external staircase, they shall be protected with fire rated doors/window assemblies with rating of at least 60 min (*see* Fig. 10).

e) The external stairs shall be constructed of non-combustible materials, and any doorway leading to it shall have minimum 120 min fire resistance.

f) No external staircase, shall be inclined at an angle greater than 45° from the horizontal.

g) External stairs shall have straight flight not less than 1 500 mm wide.

h) Handrails, to be provided on both sides, shall be of a height not less than 1 000 mm and not exceeding 1 200 mm. There shall be provisions of balusters with maximum gap of 150 mm.

j) The use of spiral staircase shall be limited to low occupant load and to a building not exceeding 9 m in height. A spiral staircase shall be not less than 1 500 mm in diameter and shall be designed to give adequate headroom.

9A EXAMPLE OF A STAIRWAY MARKING SIGN
[FLOOR INDICATION BOARD]

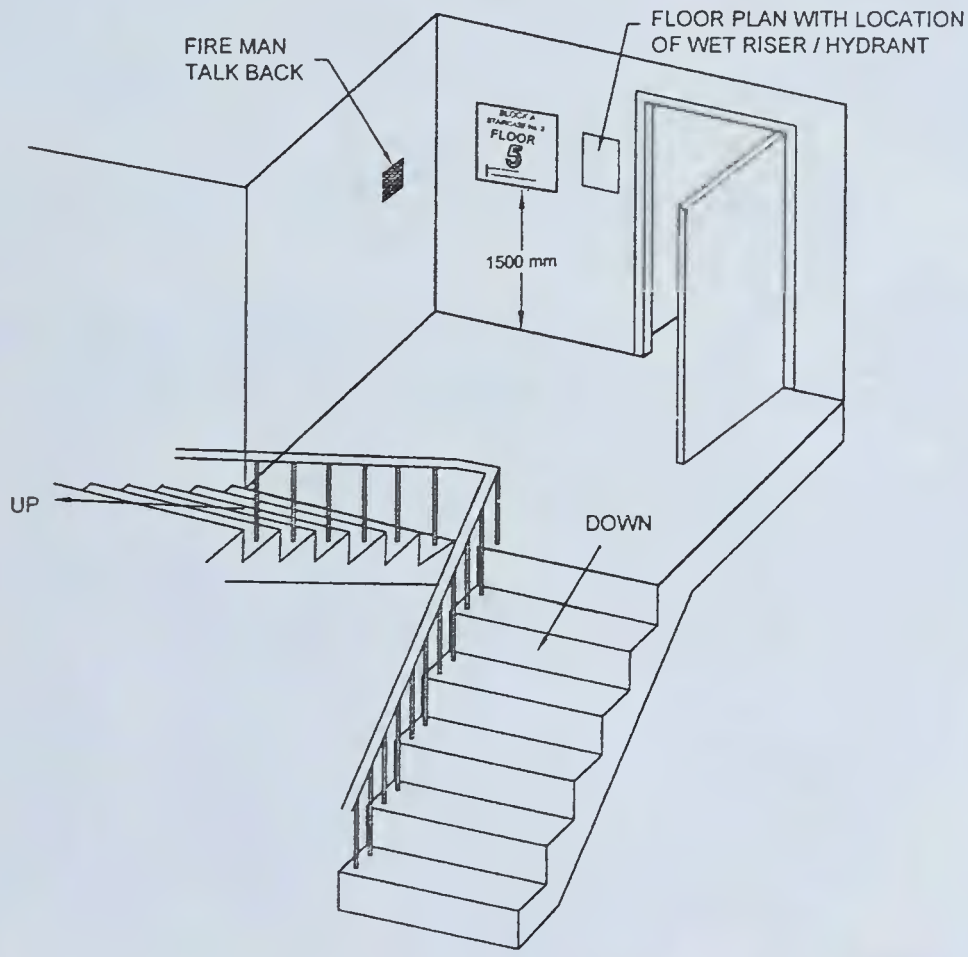

9B STAIR SIGN PLACEMENT

NOTE — Block/Wing/Building name are to be project specific. Staircase shown as '3' is intending to show the number assigned to the staircase. All exits preferably to be assigned with number/identification enabling occupants/fire man to declare location/position.

FIG. 9 SIGN MARKING AND REQUIREMENT IN EXIT

4.4.2.4.3.5 *Ramps*

a) Ramps shall comply with all the applicable requirements for staircases regarding enclosure, capacity (*see also* Table 4) and limiting dimensions, except where specified in **6.1** to **6.9** for special uses and occupancies.

b) The slope of a ramp shall not exceed 1 in 12 (8 percent).

c) Ramp(s) shall be surfaced with approved slip resistant materials that are securely attached. No perforations are permissible on ramp floors.

d) Any changes in travel direction in ramp shall be preceded by landings of 1.5 m × 1.5 m size.

e) Ramps and intermediate landings shall continue with no decrease in width along the direction of egress travel.

f) Outside ramps and landings shall be designed to minimise water accumulation on their surfaces.

g) Ramps shall have landings located at the top, at the bottom, and at doors opening onto the ramp.

h) Every landing shall be not less than 1 500 mm long in the direction of travel.

j) Where the ramp is not part of an accessible route, the ramp landings shall not be required to exceed 1 250 mm in the direction of travel, provided that the ramp has a straight run.

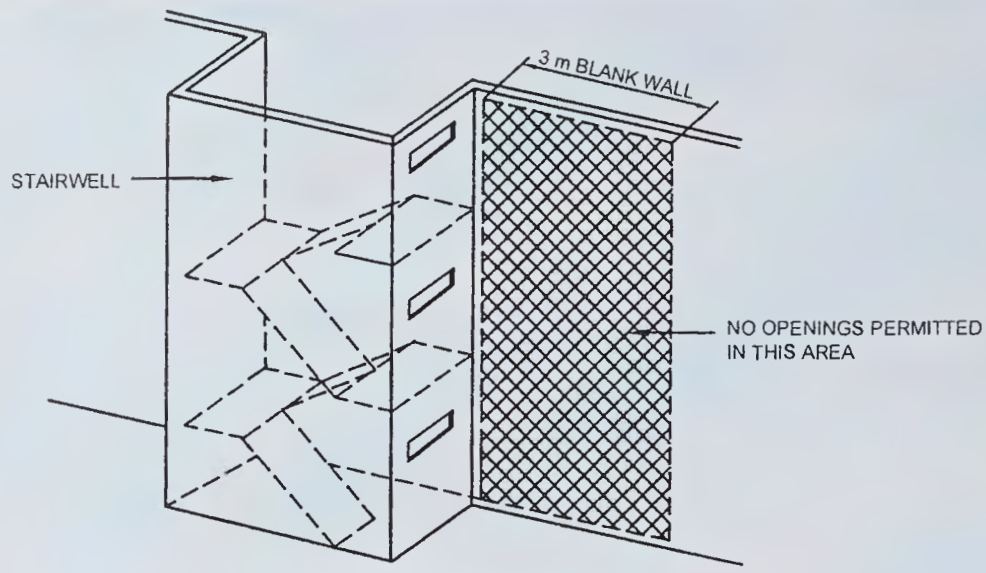

10A LIMITATIONS OF OPENINGS NEAR STAIRWELL

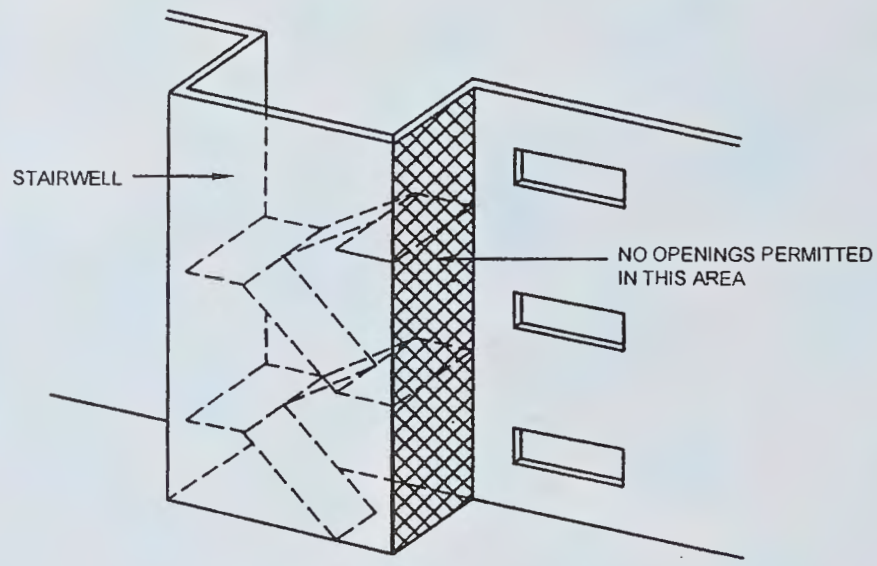

10B OPENING RESTRICTIONS ON STAIRWELL WALLS

FIG. 10 OPENING RESTRICTIONS

k) Handrails shall be provided on all ramps on both sides (*see* **4.4.2.4.3.4**).

NOTE — Above requirements are not applicable to basement car parking ramps

The ramps shall, in addition, comply with the requirements given in **13** of Part 3 'Development Control Rules and General Building Requirements' of the Code.

4.4.2.5 *Smoke control of exits*

a) In building design, compartmentation plays a vital part in limiting the spread of fire and smoke. The design should ensure avoidance of spread of smoke to adjacent spaces through the various leakage openings in the compartment enclosure, such as cracks, openings around pipes ducts, airflow grills and doors. In the absence of proper sealing of all these openings, smoke and toxic gases will obstruct the free movement of occupants of the building through the exits. Pressurization of staircases is of great importance for the exclusion of smoke and toxic gases from the protected exit.

b) Pressurization is a method adopted for protecting the exits from ingress of smoke, especially in high-rise buildings. In pressurization, air is injected into the staircases, lobbies, etc, as applicable, to raise their pressure slightly above the pressure in adjacent parts of the building. As a result, ingress of smoke or toxic gases into the exits will be prevented. The pressurization of staircases and lift lobbies shall be adopted as given in Table 6.

The pressure difference for staircases shall be 50 Pa.

Pressure differences for lobbies (or corridors) shall be between 25 Pa and 30 Pa. Further, the pressure differential for enclosed staircase adjacent to such lobby (or corridors) shall be 50 Pa. For enclosed staircases adjacent to non-pressurized lobby (or corridors), the pressure differential shall be 50 Pa.

Table 6 Pressurization of Staircases and Lift Lobbies

[*Clauses* 4.4.2.5 (b) *and* E-2]

Sl No.	Component	Height of Building		
		Less than 15 m	15 m to 30 m	More than 30 m
(1)	(2)	(3)	(4)	(5)
i)	Internal staircase not with external wall	Pressurized except for residential buildings (A-2 and A-4)	Pressurized	Pressurized
ii)	Internal staircase with external wall	Pressurized except for residential buildings (A-2 and A-4) or Naturally ventilated	Naturally ventilated or Pressurized	Cross-ventilated or Pressurized
iii)	Lift lobby	Not required at ground and above. However lift lobby segregation and pressurization is required for lift commuting from ground to basement	Naturally ventilated or Pressurized[1)]	Cross-ventilated or Pressurized[1)]

NOTES

1 The natural ventilation requirement of the staircase shall be, achieved through opening at each landing, of an area 0.5 m^2 in the external wall. A cross ventilated staircase shall have 2 such openings in opposite/adjacent walls or the same shall be cross-ventilated through the corridor.

2 Enclosed staircase leading to more than one basement shall be pressurized.

[1)] Lift lobby with fire doors (120 min) at all levels with pressurization of 25-30 Pa is required. However, if lift lobby cannot be provided at any of the levels in air conditioned buildings or in internal spaces where funnel/flue effect may be created, lift hoistway shall be pressurized at 50 Pa. For building greater than 30 m, multiple point injection air inlets to maintain desired pressurization level shall be provided. If the lift lobby, lift and staircase are part of firefighting shaft, lift lobby necessarily has to be pressurized in such case, unless naturally ventilated.

c) Equipment and ductwork for staircase pressurization shall be in accordance with one of the following:

1) Directly connected to the stairway by ductwork enclosed in non-combustible construction.

2) If ducts used to pressurize the system are passed through shafts and grills are provided at each level, it shall be ensured that hot gases and smoke from the building cannot ingress into the staircases under any circumstances.

d) The normal air conditioning system and the pressurization system shall be designed and interfaced to meet the requirements of emergency services. When the emergency pressurization is brought into action, the following changes in the normal air conditioning system shall be effected:

1) Any re-circulation of air shall be stopped and all exhaust air vented to atmosphere.

2) Any air supply to the spaces/areas other than exits shall be stopped.

3) The exhaust system may be continued provided,

i) the positions of the extraction grills permit a general air flow away from the means of egress;

ii) the construction of the ductwork and fans is such that, it will not be rendered inoperable by hot gases and smoke; and

iii) there is no danger of spread of smoke to other floors by the path of the extraction system which can be ensured by keeping the extraction fans running.

e) For pressurized stair enclosure systems, the activation of the systems shall be initiated by signalling from fire alarm panel.

f) Pressurization system shall be integrated and supervised with the automatic/manual fire alarm system for actuation.

g) Wherever pressurized staircase is to be connected to unpressurized area, the two areas shall be segregated by 120 min fire resistant wall.

h) Fresh air intake for pressurization shall be away (at least 4 m) from any of the exhaust outlets/grille.

4.5 Compartmentation

4.5.1 *General*

a) It is important to limit the spread of a fire in any building. The usual method is to use fire barriers. In some instances these barriers need to be penetrated for ductwork, plumbing and electrical systems, and in such cases, use of passive fire protection measures shall be done so that the integrity of these barriers is not compromised.

b) Floor(s) shall be compartmented with area as given below.

4.5.2 All floors shall be compartmented/zoned with area of each compartment being not more than 750 m^2. The maximum size of the compartment shall be as follows, in case of sprinklered basement/building:

Sl No.	*Use*	*Compartmentation Area* m^2
(1)	(2)	(3)
i)	Basement car parking	3 000
ii)	Basements (other than car parking)	2 000
iii)	Institutional buildings: Subdivision C-1	1 800
iv)	Institutional buildings: Subdivision C-2 and C-3	1 125
v)	Mercantile and assembly buildings	2 000
vi)	Business buildings	3 000
vii)	All other buildings (Excluding low hazard and moderate hazard industrial buildings and storage buildings)[1)]	750

[1)] Compartmentation for low hazard and moderate hazard industrial buildings and storage buildings shall be done in consultation with local fire department.

In addition, there shall be requirement of a minimum of two compartments if the floor plate size is equal or less than the areas mentioned above. However, such requirement of minimum two compartments shall not be required, if the floor plate is less than 750 m^2.

Compartmentation shall be achieved by means of fire barrier having fire resistance rating of 120 min.

4.6 Smoke Control

4.6.1 *Smoke Exhaust and Pressurization of Areas Above Ground*

Corridors in exit access (exit access corridor) are created for meeting the requirement of use, privacy and layout in various occupancies. These are most often noted in hospitality, health care occupancies and sleeping accommodations.

Exit access corridors of guest rooms and indoor patient department/areas having patients lacking self preservation and for sleeping accommodations such as apartments, custodial, penal and mental institutions, etc, shall be provided with 60 min fire resistant wall and 20 min self-closing fire doors along with all fire stop sealing of penetrations.

Smoke exhaust system having make-up air and exhaust air system or alternatively pressurization system with supply air system for these exit access corridors shall be required.

Smoke exhaust system having make-up air and exhaust air system shall also be required for theatres/auditoria.

Such smoke exhaust system shall also be required for large lobbies and which have exit through staircase leading to exit discharge. This would enable eased exit of people through smoke controlled area to exit discharge.

All exit passageway (from exit to exit discharge) shall be pressurized or naturally ventilated. The mechanical pressurization system shall be automatic in action with manual controls in addition. All such exit passageway shall be maintained with integrity for safe means of egress and evacuation. Doors provided in such exit passageway shall be fire rated doors of 120 min rating.

Smoke exhaust system where provided, for above areas and occupancies shall have a minimum of 12 air changes per hour smoke exhaust mechanism. Pressurization system where provided shall have a minimum pressure differential of 25-30 Pa in relationship to other areas.

The smoke exhaust fans in the mechanical ventilation system shall be fire rated, that is, 250°C for 120 min.

For naturally cross-ventilated corridors or corridors with operable windows, such smoke exhaust system or pressurization system will not be required.

4.6.2 *Smoke Exhaust and Pressurization of Areas Below Ground*

Each basement shall be separately ventilated. Vents with cross-sectional area (aggregate) not less than 2.5 percent of the floor area spread evenly round the perimeter of the basement shall be provided in the form of grills, or breakable stall board lights or pavement lights or by way of shafts.

Alternatively, a system of mechanical ventilation system may be provided with following requirements:

a) Mechanical ventilation system shall be designed to permit 12 air changes per hour in case of fire or distress call. However, for

normal operation, air changes schedule shall be as given in Part 8 'Building Services, Section 3 Air conditioning, Heating and Mechanical Ventilation' of the Code.

b) In multi-level basements, independent air intake and smoke exhaust shafts (masonry or reinforced concrete) for respective basement levels and compartments therein shall be planned with its make-up air and exhaust air fans located on the respective level and in the respective compartment. Alternatively, in multi-level basements, common intake masonry (or reinforced cement concrete) shaft may serve respective compartments aligned at all basement levels. Similarly, common smoke exhaust/outlet masonry (or reinforced cement concrete) shafts may also be planned to serve such compartments at all basement levels. All supply air and exhaust air fans on respective levels shall be installed in fire resisting room of 120 min. Exhaust fans at the respective levels shall be provided with back draft damper connection to the common smoke exhaust shaft ensuring complete isolation and compartmentation of floor isolation to eliminate spread of fire and smoke to the other compartments/floors.

c) Due consideration shall be taken for ensuring proper drainage of such shafts to avoid insanitation condition. Inlets and extracts may be terminated at ground level with stall board or pavement lights as before. Stall board and pavement lights should be in positions easily accessible to the fire brigade and clearly marked 'AIR INLET' or 'SMOKE OUTLET' with an indication of area served at or near the opening.

d) Smoke from any fire in the basement shall not obstruct any exit serving the ground and upper floors of the building.

e) The smoke exhaust fans in the mechanical ventilation system shall be fire rated, that is, 250°C for 120 min.

f) The smoke ventilation of the basement car parking areas shall be through provision of supply and exhaust air ducts duly installed with its supports and connected to supply air and exhaust fans. Alternatively, a system of impulse fans (jet fans) may be used for meeting the requirement of smoke ventilation complying with the following:

   1) Structural aspects of beams and other down stands/services shall be taken care of in the planning and provision of the jet fans.

   2) Fans shall be fire rated, that is, 250°C for 120 min.

   3) Fans shall be adequately supported to enable operations for the duration as above.

   4) Power supply panels for the fans shall be located in fire safe zone to ensure continuity of power supply.

   5) Power supply cabling shall meet circuit integrity requirement in accordance with accepted standard [4(13)].

The smoke extraction system shall operate on actuation of flow switch actuation of sprinkler system. In addition, a local and/or remote 'manual start-stop control/switch' shall be provided for operations by the fire fighters.

Visual indication of the operation status of the fans shall also be provided with the remote control.

No system relating to smoke ventilation shall be allowed to interface or cross the transformer area, electrical switchboard, electrical rooms or exits.

Smoke exhaust system having make-up air and exhaust air system for areas other than car parking shall be required for common areas and exit access corridor in basements/underground structures and shall be completely separate and independent of car parking areas and other mechanical areas.

Supply air shall not be less than 5 m from any exhaust discharge openings.

4.7 Gas Supply

4.7.1 *Town Gas/LPG Supply Pipes*

Where gas pipes are run in buildings, the same shall be run in separate shafts exclusively for this purpose and these shall be on external walls, away from the staircases. Gas distribution pipes shall always be below the false ceiling. The length of these pipes shall be as short as possible. In the case of kitchen cooking range area, hood should have grease filters using metallic grill to trap oil vapours escaping into the fume hood

NOTE — For detailed information on gas pipe installations, reference may be made to Part 9 'Plumbing Services, Section 4 Gas Supply' of the Code.

4.7.2 *Thermal detectors*

These shall be installed into fume hoods of large kitchens for hotels, hospitals, and similar areas located in high rise buildings. Arrangements shall be made for automatic tripping of the exhaust fan in case of fire. If gas is used, the same shall be shut off. The voltage shall be 24 V or 100 V d.c. operated with external rectifier. The valve shall be of the hand re-set type and shall be located in an area segregated from cooking ranges. Valves shall be easily accessible. The hood shall have manual facility for steam or suitable hood extinguishing gas released depending on duty condition.

4.7.3 Gas cylinders and manifold shall need to be housed in a detached location with no other occupancy within distances prescribed in good practice [4(14)] thereof. There shall be an enclosure suitably ventilated. It is desirable to provide medium velocity spray nozzles which can be operated by quick opening valve situated away from the enclosure.

4.7.4 In the case of gas cylinders, if manifold has to be installed on podium/close to podium, the same shall be away from any air intakes/smoke exhaust openings/ any windows.

4.7.5 Pressure regulating stations shall be designed and installed at critical locations for excess flow shut off valves. Seismic shut off valve at the main distribution point shall be installed for buildings in D-6 occupancy and institutional occupancy above 15 m.

4.7.6 Gas meters shall be housed in a suitably constructed metal cupboard located in a well-ventilated space, keeping in view the fact that LPG is heavier than air and town gas is lighter than air.

4.7.7 Wherever LPG reticulation/cylinders are used in buildings above 100 m, gas leak detectors shall be provided at the usage points and monitored from fire command centre. The cables used for signaling shall be circuit integrity cables.

4.7.8 The gas lines shall not be installed through any electrical shafts, escape routes, refuge areas/refuge floors.

4.7.9 Kitchens working on LPG fuel shall not be permitted in basements.

4.8 Hazardous Areas, Gaseous, Oil Storage Yard, etc

Rooms containing high pressure boilers, refrigerating machinery, transformers or other service equipment subject to possible explosion shall not be located directly under or adjacent to exits. All such rooms shall be effectively cut-off from other parts of the building and shall be provided with adequate vents to the outside air.

All rooms or areas of high hazard in additions to those hereinbefore mentioned, shall be segregated or shall be protected with fire resistant walls having fire rating of 120 min as fire, explosion or smoke therefrom is likely to interfere with safe egress from the building. Further,

a) each building shall be provided with an approved outside gas shut-off valve conspicuously marked. The detailed requirements regarding safe use of gas shall be as specified in Part 9 'Plumbing Services, Section 4 Gas Supply' of the Code; and

b) all exterior openings in a boiler room or rooms contain central heating equipment, if located below opening in another storey or if less than 3 m from other doors or windows of the same building shall be protected by a fire assembly as in **3.4.5**. Such assemblies shall be fixed, automatic or self-closing.

4.9 Fire Detection and Alarm

a) The requirements of fire detection and alarm systems are covered for each occupancy in Table 7 and under **6.1** to **6.9** for annunciation to occupants in view of the ensuing vulnerability and to warn occupants early of the existence of fire, so as to facilitate orderly and safe egress.

b) Fire detection and alarm systems in buildings shall be so planned and programmed so as to enable operations of various systems and equipment to facilitate requirements leading to life safety, compartmentation and fire protection. These systems and equipment may include electromechanical systems such as air handling units; pressurization systems; smoke management systems; creation of compartmentation through the release of fire barrier, hold-up fire doors, etc; and monitoring of fire water storage tanks and pumps, pressures in hydrant and sprinkler system, etc. These planning and requirements shall be based on building occupancy and other requirements on case to case basis.

c) Voice evacuation systems shall employ Hindi, English and vernacular language using pre-recorded messages and integrate with fire alarm panels for alerting the zone of fire and surrounding zones/floors as required for annunciation (*see also* Table 7 and its Note 1).

d) Appropriate visual warning arrangement through visual strobes/beacons may be considered in appropriate situations particularly in public buildings, at required locations to ensure visual as well as alarm for persons with hearing impairment.

e) For assembly buildings, institutional buildings and all buildings above 30 m in height where fire alarm system is provided in accordance to Table 7, detectors shall also be provided inside the electrical shafts, and lift machine rooms, etc, besides occupancy areas.

f) Fire alarm panels shall be connected in peer to peer network or with redundant cables, run in different shafts. Each panel shall be able to work in standalone mode and master slave architecture may be used where required.

g) The fire detection system shall be in accordance with accepted standards [4(15)].

Table 7 Minimum Requirements for Fire Fighting Installations

[*Clauses* 4.9(a), 4.9(c), 4.9(e), 5.1.1(a), 5.1.1(d), 5.1.2.1, 5.1.3(a), E-7, H-2(f) *and* Table 2]

Sl No.	Type of Building Occupancy	Type of Installation								Water Supply (litre)		Pump Capacity (litre/min)	
		Fire Exting-uisher	First Aid Hose Reel	Wet Riser	Down Comer	Yard Hydrant	Automatic Sprinkler System	Manually Operated Electronic Fire Alarm Systems (*see* Note 1)	Automatic Detection and Alarm System (*see* Note 2)	Under-ground Static Water Storage Tank Combined Capacity for Wet Riser, Yard Hydrant and Sprinklers per Set of Pumps	Terrace Tank over Respective Tower Terrace	Pump Near Underground Static Water Storage Tank (Fire Pump) with Minimum Pressure of 3.5 kg/cm^2 at Remotest Location	At the Terrace Tank Level with Minimum Pressure of 3.5 kg/cm^2
(1)	(2)	(3)	(4)	(5)	(6)	(7)	(8)	(9)	(10)	(11)	(12)	(13)	(14)
RESIDENTIAL BUILDINGS (A)													
a)	**Lodging and Rooming Houses (A-1)** (*see* Note 3)												
1)	Less than 15 m in height												
	i) Up to 15 rooms	R	NR	NR	NR	NR	R (*see* Note 4)	NR	NR	NR	5 000 (*see* Note 5)	NR	NR
	ii) More than 15 and up to 30 rooms	R	R	NR	NR	NR	R (*see* Note 4)	NR	NR	NR	5 000 (5 000) (*see* Note 6)	NR	450 (450) (*see* Note 6)
	iii) More than 30 rooms	R	R	NR	NR	NR	R (*see* Note 4)	R (*see* Note 7)	NR	NR	10 000 (5 000) (*see* Note 6)	NR	450 (450) (*see* Note 6)
b)	**One or two Family Private Dwellings (A-2)** (*see* Note 3)	NR	NR	NR	NR	NR	NR	NR	NR	NR	NR	NR	NR
c)	**Dormitories (A-3) and Apartment Houses (A-4)**												
1)	Less than 15 m in height	R	R	NR	NR	NR	R (*see* Note 4)	NR	NR	NR	5 000 (5 000) (*see* Note 6)	NR	450 (450) (*see* Note 6)

Table 7 — (*Continued*)

Sl No.	Type of Building Occupancy	Type of Installation								Water Supply (litre)		Pump Capacity (litre/min)	
		Fire Exting-uisher	First Aid Hose Reel	Wet Riser	Down Comer	Yard Hydrant	Automatic Sprinkler System	Manually Operated Electronic Fire Alarm Systems (*see* Note 1)	Automatic Detection and Alarm System (*see* Note 2)	Under-ground Static Water Storage Tank Combined Capacity for Wet Riser, Yard Hydrant and Sprinklers per Set of Pumps	Terrace Tank over Respective Tower Terrace	Pump Near Underground Static Water Storage Tank (Fire Pump) with Minimum Pressure of 3.5 kg/cm^2 at Remotest Location	At the Terrace Tank Level with Minimum Pressure of 3.5 kg/cm^2
(1)	(2)	(3)	(4)	(5)	(6)	(7)	(8)	(9)	(10)	(11)	(12)	(13)	(14)
2)	15 m and above but not exceeding 35 m in height	R	R	NR	R	NR	R (*see* Note 4)	R (*see* Note 8)	NR	NR	25 000	NR	900
3)	Above 35 m but not exceeding 45 m in height	R	R	R	NR	NR	R (*see* Note 4 and Note 9)	R	NR	75 000	5 000	(*see* Note 10)	NR
4)	Above 45 m in height but not exceeding 60 m in height	R	R	R	NR	R	R	R	NR	150 000	10 000	(*see* Note 11)	NR
5)	Above 60 m in height	R	R	R	NR	R	R	R	R	200 000	10 000	(*see* Note 12 & Note 13)	NR
d)	**Hotels (A-5)**												
1)	Less than 15 m in height												
	i) Floor area not exceeding 300 m^2 on any of the floor	R	R	NR	NR	NR	R (*see* Note 4)	R	NR	NR	5 000 (5000) (*see* Note 6)	NR	450 (450) (*see* Note 6)
	ii) Floor area exceeding 300 m^2 but not more 1 000 m^2 on any of the floor	R	R	R (*see* Note 7)	NR	NR	R (*see* Note 4)	R	R	10 000 for every 500 m^2 floor area subject to minimum of 50 000 (*see* Note 7)	10 000 (5000) (*see* Note 6)	(*see* Note 14 in case of provision of wet riser)	450 (450) (*see* Note 6)
	iii) Floor area exceeding 1 000 m^2 on any of the floor	R	R	R (*see* Note 15)	NR	R	R	R (*see* Note 1)	R	100 000 (*see* Note 15)	10 000 (*see* Note 4)	(*see* Note 15 and Note 14)	NR

Table 7 — (*Continued*)

Sl No.	Type of Building Occupancy	Type of Installation								Water Supply (litre)		Pump Capacity (litre/min)	
		Fire Exting-uisher	First Aid Hose Reel	Wet Riser	Down Comer	Yard Hydrant	Automatic Sprinkler System	Manually Operated Electronic Fire Alarm Systems (*see* Note 1)	Automatic Detection and Alarm System (*see* Note 2)	Under-ground Static Water Storage Tank Combined Capacity for Wet Riser, Yard Hydrant and Sprinklers per Set of Pumps	Terrace Tank over Respective Tower Terrace	Pump Near Underground Static Water Storage Tank (Fire Pump) with Minimum Pressure of 3.5 kg/cm^2 at Remotest Location	At the Terrace Tank Level with Minimum Pressure of 3.5 kg/cm^2
(1)	(2)	(3)	(4)	(5)	(6)	(7)	(8)	(9)	(10)	(11)	(12)	(13)	(14)
2)	15 m and above but not exceeding 30 m	R	R	R	NR	R	R	R	R	150 000	20 000	(*see* Note 11)	NR
3)	Above 30 m in height	R	R	R	NR	R	R	R	R	200 000	20 000	(*see* Note 11)	NR
e)	**Hotels (A-6)**	R	R	R	NR	R	R	R	R	250 000	20 000	(*see* Note 12)	NR
EDUCATIONAL BUILDINGS (B) (*see* Note 16)													
1)	Less than 15 m in height												
	i) Ground plus one or more storeys	R	R	NR	NR	NR	R (*see* Note 4)	NR	NR	NR	10 000 (5 000) (*see* Note 6)	NR	450 (450) (*see* Note 6)
2)	15 m and above but not exceeding 24 m in height	R	R	NR	R	NR	R (*see* Note 4)	R	NR	NR	25 000	NR	900
3)	Above 24 m but not exceeding 30 m in height	R	R	R	NR	R	R (*see* Note 4)	R	NR	50 000	(5 000) (*see* Note 6)	(*see* Note 14)	NR
INSTITUTIONAL BUILDINGS (C) (*see* Note 16)													
a)	**Hospitals, Sanatoria and Nursing Homes (C-1)**												
1)	Less than 15 m in height with plot area up to 1 000 m^2												
	i) Up to ground plus one storey, with no beds	R	NR	NR	NR	NR	R (*see* Note 4)	R	NR	NR	(5 000) (*see* Note 6)	NR	(450) (*see* Note 6)

Table 7 — (*Continued*)

Sl No.	Type of Building Occupancy	Type of Installation								Water Supply (litre)		Pump Capacity (litre/min)	
		Fire Exting-uisher	First Aid Hose Reel	Wet Riser	Down Comer	Yard Hydrant	Automatic Sprinkler System	Manually Operated Electronic Fire Alarm Systems (*see* Note 1)	Automatic Detection and Alarm System (*see* Note 2)	Under-ground Static Water Storage Tank Combined Capacity for Wet Riser, Yard Hydrant and Sprinklers per Set of Pumps	Terrace Tank over Respective Tower Terrace	Pump Near Underground Static Water Storage Tank (Fire Pump) with Minimum Pressure of 3.5 kg/cm^2 at Remotest Location	At the Terrace Tank Level with Minimum Pressure of 3.5 kg/cm^2
(1)	(2)	(3)	(4)	(5)	(6)	(7)	(8)	(9)	(10)	(11)	(12)	(13)	(14)
	ii) Up to ground plus one storey with beds	R	R	NR	NR	NR	R (*see* Note 4)	R	NR	NR	5 000 (5 000) (*see* Note 6)	NR	450 (450) (*see* Note 6)
	iii) Ground plus two or more storeys, with no beds	R	R	NR	R	NR	R (*see* Note 4)	R	R	NR	10 000 (5 000) (*see* Note 6)	NR	900 (450) (*see* Note 6)
	iv) Ground plus two or more storeys, with beds	R	R	R	NR	NR	R	R (*see* Note 1)	R	75 000	10 000	(*see* Note 14)	NR
2)	Less than 15 m in height with plot area more than 1 000 m^2	R	R	R	NR	R	R	R (*see* Note 1)	R	1 00 000	10 000	(*see* Note 14)	NR
3)	15 m and above but not exceeding 24 m in height	R	R	R	NR	R	R	R	R	150 000	20 000	(*see* Note 10)	NR
4)	Above 24 m and not exceeding 45 m in height	R	R	R	NR	R	R	R	R	200 000	20 000	(*see* Note 11)	NR
b)	**Custodial (C-2), and Penal and Mental (C-3)**												
1)	Less than 10 m in height												
	i) Up to 300 persons	R	R	NR	NR	NR	R (*see* Note 4)	R	NR	NR	10 000 (5 000) (*see* Note 6)	NR	450 (450) (*see* Note 6)
	ii) More than 300 persons	R	R	NR	R	NR	R (*see* Note 4)	R	NR	NR	15 000 (5 000) (*see* Note 6)	NR	900 (450) (*see* Note 6)

Table 7 — (*Continued*)

Sl No.	Type of Building Occupancy	Type of Installation								Water Supply (litre)		Pump Capacity (litre/min)	
		Fire Exting-uisher	First Aid Hose Reel	Wet Riser	Down Comer	Yard Hydrant	Automatic Sprinkler System	Manually Operated Electronic Fire Alarm Systems (*see* Note 1)	Automatic Detection and Alarm System (*see* Note 2)	Under-ground Static Water Storage Tank Combined Capacity for Wet Riser, Yard Hydrant and Sprinklers per Set of Pumps	Terrace Tank over Respective Tower Terrace	Pump Near Underground Static Water Storage Tank (Fire Pump) with Minimum Pressure of 3.5 kg/cm^2 at Remotest Location	At the Terrace Tank Level with Minimum Pressure of 3.5 kg/cm^2
(1)	(2)	(3)	(4)	(5)	(6)	(7)	(8)	(9)	(10)	(11)	(12)	(13)	(14)
2)	10 m and above but not exceeding 15 m in height	R	R	R	NR	R	R (*see* Note 4)	R	R	100 000	5 000 (5 000) (*see* Note 6)	(*see* Note 10)	NR
3)	15 m and above but not exceeding 24 m in height	R	R	R	NR	R	R	R	R	150 000	10 000	(*see* Note 11)	NR
4)	24 m and above but not exceeding 30 m in height	R	R	R	NR	R	R	R	R	200 000	20 000	(*see* Note 11)	NR
ASSEMBLY BUILDINGS (D) (*see* Note 16)													
a)	**Buildings (D-1 to D-5)**												
1)	Less than 10 m in height												
	i) Up to 300 persons	R	R	NR	R	NR	R (*see* Note 4)	R	NR	NR	20 000 (5 000) (*see* Note 6)	NR	450 (450) (*see* Note 6)
	ii) More than 300 persons	R	R	NR	R	NR	R (*see* Note 4)	R	NR	NR	25 000 (5 000) (*see* Note 6)	NR	900 (450) (*see* Note 6)
2)	Above 10 m but not exceeding 15 m in height	R	R	R	NR	NR	R (*see* Note 4)	R (*see* Note 1)	R	100 000	5 000 (5 000) (*see* Note 6)	(*see* Note 10)	450 (450) (*see* Note 6)
3)	Above 15 m but not exceeding 24 m in height	R	R	R	NR	R	R	R	R	150 000	10 000	(*see* Note 10)	NR
4)	Above 24 m but not exceeding 30 m in height	R	R	R	NR	R	R	R	R	200 000	20 000	(*see* Note 11)	NR
b)	**D-6**	R	R	R	NR	R	R	R	R	200 000	20 000	(*see* Note 12)	NR
c)	**D-7**	For details *see* **6.4.4**											

Table 7 — (*Continued*)

Sl No.	Type of Building Occupancy	Type of Installation								Water Supply (litre)		Pump Capacity (litre/min)	
		Fire Exting-uisher	First Aid Hose Reel	Wet Riser	Down Comer	Yard Hydrant	Automatic Sprinkler System	Manually Operated Electronic Fire Alarm Systems (*see* Note 1)	Automatic Detection and Alarm System (*see* Note 2)	Under-ground Static Water Storage Tank Combined Capacity for Wet Riser, Yard Hydrant and Sprinklers per Set of Pumps	Terrace Tank over Respective Tower Terrace	Pump Near Underground Static Water Storage Tank (Fire Pump) with Minimum Pressure of 3.5 kg/cm^2 at Remotest Location	At the Terrace Tank Level with Minimum Pressure of 3.5 kg/cm^2
(1)	(2)	(3)	(4)	(5)	(6)	(7)	(8)	(9)	(10)	(11)	(12)	(13)	(14)
BUSINESS BUILDINGS (E)													
1)	Less than 10 m in height	R	R	NR	R	NR	R (*see* Note 4)	R	NR	NR	10 000 (5 000) (*see* Note 6)	NR	450 (450) (*see* Note 6)
2)	Above 10 m but not exceeding 15 m in height	R	R	R	NR	NR	R (*see* Note 4)	R	R	50 000	5 000 (5 000) (*see* Note 6)	(*see* Note 14)	450 (450) (*see* Note 6)
3)	Above 15 m and up to 24 m in height	R	R	R	NR	R	R	R	R	100 000	10 000	(*see* Note 10)	NR
4)	Above 24 m and up to 30 m in height	R	R	R	NR	R	R	R	R	150 000	20 000	(*see* Note 11)	NR
5)	Above 30 m in height	R	R	R	NR	R	R	R	R	200 000	20 000	(*see* Note 12)	NR
MERCANTILE BUILDINGS (F)													
a)	**F-1 and F-2** (*see* Note 16)												
1)	Less than 15 m in height												
	i) Ground plus one storey, with total of all floor area not exceeding 500 m^2	R	R	NR	NR	NR	R (*see* Note 4)	NR	NR	NR	5 000 (5 000) (*see* Note 6)	NR	450 (450) (*see* Note 6)

Table 7 — (*Continued*)

Sl No.	Type of Building Occupancy	Type of Installation								Water Supply (litre)		Pump Capacity (litre/min)	
		Fire Exting-uisher	First Aid Hose Reel	Wet Riser	Down Comer	Yard Hydrant	Automatic Sprinkler System	Manually Operated Electronic Fire Alarm Systems (*see* Note 1)	Automatic Detection and Alarm System (*see* Note 2)	Under-ground Static Water Storage Tank Combined Capacity for Wet Riser, Yard Hydrant and Sprinklers per Set of Pumps	Terrace Tank over Respective Tower Terrace	Pump Near Underground Static Water Storage Tank (Fire Pump) with Minimum Pressure of 3.5 kg/cm^2 at Remotest Location	At the Terrace Tank Level with Minimum Pressure of 3.5 kg/cm^2
(1)	(2)	(3)	(4)	(5)	(6)	(7)	(8)	(9)	(10)	(11)	(12)	(13)	(14)
	ii) Ground plus one storey and total of all floor area exceeding 500 m^2	R	R	NR	R	NR	R (*see* Note 4)	R	NR	NR	20 000 (5 000) (*see* Note 6)	NR	900 (450) (*see* Note 6)
	iii) More than ground plus one storey	R	R	NR	R	NR	R (*see* Note 4)	R	NR	NR	25 000 (5 000) (*see* Note 6)	NR	900 (450) (*see* Note 6)
2)	Above 15 m but not exceeding 24 m in height	R	R	R	NR	R	R	R	R	100 000	10 000	(*see* Note 10)	NR
3)	Above 24 m but not exceeding 30 m in height	R	R	R	NR	R	R	R	R	200 000	20 000	(*see* Note 11)	NR
b)	**Underground shopping complex (F-3)**	R	R	R	NR	R	R	R	R	150 000	10 000	(*see* Note 11)	NR
INDUSTRIAL BUILDINGS (G) (*see* Note 17)													
a)	**Low Hazard (G-1)** (*see* Note 18)												
	i) Covered area up to 100 m^2	R	NR	NR	NR	NR	R (*see* Note 4)	NR	NR	NR	5 000 (*see* Note 5)	NR	450 (*see* Note 5)
	ii) Covered area more than 100 m^2 and up to 500 m^2	R	R	NR	R (*see* Note 8)	NR	R (*see* Note 4)	NR	NR	NR	20 000 (5 000) (*see* Note 6)	NR	450 (450) (*see* Note 6)

Table 7 — (*Continued*)

Sl No.	Type of Building Occupancy	Type of Installation								Water Supply (litre)		Pump Capacity (litre/min)	
		Fire Exting-uisher	First Aid Hose Reel	Wet Riser	Down Comer	Yard Hydrant	Automatic Sprinkler System	Manually Operated Electronic Fire Alarm Systems (*see* Note 1)	Automatic Detection and Alarm System (*see* Note 2)	Under-ground Static Water Storage Tank Combined Capacity for Wet Riser, Yard Hydrant and Sprinklers per Set of Pumps	Terrace Tank over Respective Tower Terrace	Pump Near Underground Static Water Storage Tank (Fire Pump) with Minimum Pressure of 3.5 kg/cm^2 at Remotest Location	At the Terrace Tank Level with Minimum Pressure of 3.5 kg/cm^2
(1)	(2)	(3)	(4)	(5)	(6)	(7)	(8)	(9)	(10)	(11)	(12)	(13)	(14)
	iii) Covered area more than 500 m^2 (for building height up to 15 m)	R	R	NR	R	NR	R (*see* Note 4)	R	NR	NR	20 000 (5000) (*see* Note 6)	NR	450 (450) (*see* Note 6)
	iv) Covered area more than 500 m^2 (for building height above 15 m)	R	R	R	NR	R	R (*see* Note 4)	R	R	75 000	5 000 (*see* Note 6)	(*see* Note 14)	NR
b)	**Moderate Hazard (G-2)** (*see* Note **18**)												
	i) Covered area up to 100 m^2	R	R	NR	NR	NR	R	NR	NR	NR	10 000	NR	450
	ii) Covered area more than 100 m^2 and up to 500 m^2	R	R	NR	NR	NR	R	NR	NR	NR	20 000	NR	900
	iii) Covered area more than 500 m^2 and up to 1000 m^2 (for height up to 15 m)	R	R	NR	R	NR	R	R	R	NR	50 000	NR	900
	iv) Covered area more than 500 m^2 and up to 1000 m^2 (for height above 15 m)	R	R	R	NR	R	R	R	R	100 000	10 000	(*see* Note 14)	NR
	v) Covered area more than 1000 m^2	R	R	R	NR	R	R	R	R	150 000	20 000	(*see* Note 11)	NR

Table 7 — (*Continued*)

Sl No.	Type of Building Occupancy	Type of Installation								Water Supply (litre)		Pump Capacity (litre/min)	
		Fire Exting-uisher	First Aid Hose Reel	Wet Riser	Down Comer	Yard Hydrant	Automatic Sprinkler System	Manually Operated Electronic Fire Alarm Systems (*see* Note 1)	Automatic Detection and Alarm System (*see* Note 2)	Under-ground Static Water Storage Tank Combined Capacity for Wet Riser, Yard Hydrant and Sprinklers per Set of Pumps	Terrace Tank over Respective Tower Terrace	Pump Near Underground Static Water Storage Tank (Fire Pump) with Minimum Pressure of 3.5 kg/cm^2 at Remotest Location	At the Terrace Tank Level with Minimum Pressure of 3.5 kg/cm^2
(1)	(2)	(3)	(4)	(5)	(6)	(7)	(8)	(9)	(10)	(11)	(12)	(13)	(14)
c)	**High Hazard (G-3)** (*see* Note 19)												
	i) Covered area up to 50 m^2	R	R	NR	NR	NR	R	NR	NR	NR	10 000	NR	900
	ii) Covered area more than 50 m^2 and up to 150 m^2	R	R	NR	NR	NR	R	R	R	NR	25 000	NR	900
	iii) Covered area more than 150 m^2 and up to 300 m^2	R	R	R	NR	NR	R	R	R	50 000	10 000	(*see* Note 14)	NR
	iv) Covered area more than 300 m^2 and up to 500 m^2	R	R	R	NR	R	R	R	R	100 000	20 000	(*see* Note 10)	NR
	v) Covered area more than 500 m^2	R	R	R	NR	R	R	R	R	150 000	20 000	(*see* Note 11)	NR
STORAGE BUILDINGS (H) (*see* Note 20)													
1)	Below 15 m in height and covered area less than 250 m^2	R	R	NR	NR	NR	R	NR	NR	NR	25 000	NR	900
2)	Below 15 m in height and covered area more than 250 m^2												
	i) Ground floor only	R	R	R	NR	R	R	R	R	50 000	10 000	(*see* Note 14)	450
	ii) Ground plus one floor	R	R	R	NR	R	R	R	R	75 000	10 000	(*see* Note 10)	450

Table 7 — (*Continued*)

Sl No.	Type of Building Occupancy	Type of Installation								Water Supply (litre)		Pump Capacity (litre/min)	
		Fire Exting-uisher	First Aid Hose Reel	Wet Riser	Down Comer	Yard Hydrant	Automatic Sprinkler System	Manually Operated Electronic Fire Alarm Systems (*see* Note 1)	Automatic Detection and Alarm System (*see* Note 2)	Under-ground Static Water Storage Tank Combined Capacity for Wet Riser, Yard Hydrant and Sprinklers per Set of Pumps	Terrace Tank over Respective Tower Terrace	Pump Near Underground Static Water Storage Tank (Fire Pump) with Minimum Pressure of 3.5 kg/cm^2 at Remotest Location	At the Terrace Tank Level with Minimum Pressure of 3.5 kg/cm^2
(1)	(2)	(3)	(4)	(5)	(6)	(7)	(8)	(9)	(10)	(11)	(12)	(13)	(14)
	iii) More than ground plus one floor	R	R	R	NR	R	R	R	R	100 000	10 000	(*see* Note 10)	450
3)	Multi-Level Car Parking (MLCP)	R	R	R	NR	R	R	R	NR	150 000	10 000	(*see* Note 11)	900
HAZARDOUS BUILDINGS (J) (*see* Note 20)													
1)	Up to 15 m in height												
	i) Single Storey Building	R	R	R	NR	R	R	R	R	Minimum 240 min firefighting requirements	NR	(*see* Note 21)	NR
	ii) More than one floor building but not exceeding 15 m	R	R	R	R	R	R	R	R	Minimum 240 min firefighting requirements	50 000	(*see* Note 21)	900

R – Required
NR – Not Required

NOTES

1 MOEFA System shall also include talk-back system and public address system for the occupancies given in the table for (d) (1) (iii) under A-5, (a) (1) (iv) and (a) (2) under C-1, and (a) (2) under D-1 to D-5, in all buildings 15 m and above in height, except for A-3 and A-4 occupancies where these shall be provided for buildings of height 24 m and above. These shall also be provided in car parking areas more than 300 m^2 and in multi-level car parking irrespective of their areas.

2 Automatic detection and alarm system is not required to be provided in car parking area. Such detection system shall however be required in other areas of car parking such as electrical rooms, cabins and other areas.

3 Buildings above 15 m in height are not to be permitted for occupancies A-1 and A-2.

4 Required to be installed in basement, if area of basement exceeds 200 m^2.

5 Required to be provided if basement area exceeds 200 m^2.

Table 7 — (*Concluded*)

6 Additional value given in parenthesis shall be added if basement area exceeds 200 m^2.

7 Required to be provided for buildings with more than two storeys (Ground + One)

8 Required to be provided for buildings with height above 15 m and above.

9 Sprinklers shall be fed water from both underground static water storage tank and terrace tank.

10 Provide required number of sets of pumps each consisting of one electric and one diesel pump (stand by) of capacity 2 280 litre/min and one electric pump of capacity 180 litre/min (*see* Fig. 11) (*see also* notes 22 and 23).

11 Provide required number of sets of pumps each consisting of two electric and one diesel pump (stand by) of capacity 2 280 litre/min and two electric pump of capacity 180 litre/min (*see* Fig. 12) (*see also* Notes 22 and 23).

12 Provide required number of sets of pumps each consisting of two electric and one diesel pump (stand by) of capacity 2 850 litre/min and two electric pump of capacity 180 litre/min (*see* Fig. 12) (*see also* Notes 22 and 23).

13 Lower levels in high rise buildings 60 m or above in height are likely to experience high pressure and therefore, it is recommended to consider multi-stage, multi-outlet pumps (creating pressure zones) or variable frequency drive pumps or any other equivalent arrangement.

14 Provide required number of sets of pumps each consisting of one electric and one diesel pump (stand by) of capacity 1 620 litre/min and one electric pump of capacity 180 litre/min (*see* Fig. 11) (*see also* Notes 22 and 23).

15 Required to be provided for buildings with more than one storey.

16 Buildings above 30 m in height not to be permitted for Group B, Group C, Group D and Group F occupancies.

17 The requirements given in this table for Group G Industrial Buildings are for small scale industry units. For other industries the requirements will have to be worked out on the basis of relevant Indian Standards and also in consultation with the local fire authorities.

18 Buildings above 18 m in height not to be permitted for G-1 and G-2 occupancies.

19 Buildings above 15 m in height not to be permitted for G-3 occupancies.

20 Buildings above 15 m in height not to be permitted for Group H and Group J occupancies. However, buildings above 45 m in height shall not be permitted for multi-level car parking (MLCP) occupancy.

21 Pump capacity shall be based on the covered area of the building.

22 One set of pumps shall be provided for each 100 hydrants or part thereof, with a maximum of two sets. In case of more than one pump set installation, both pump sets shall be interconnected at their delivery headers.

23 Alternative to provisions of additional set of pumps, the objective can be met by providing additional diesel pump of the same capacity and doubling the water tank capacity as required for one set of pumps.

24 As per the requirement of local authority dry riser may be used in hilly areas, industrial areas or as required.

Guidelines for selection of various types of fire detectors for different occupancies and their installation and maintenance shall be in accordance with good practice [4(16)] and the Part 12 'Asset and Facility Management' of the Code.

h) In buildings where automatic fire alarm system is provided, the following shall be monitored from fire alarm panel:

1) Water level in all tanks.
2) Hydrant and sprinkler pressures of respective zones as provided.
3) Pump 'ON/OFF' status.
4) All isolation valves, wherever provided with supervisory switch (non-padlock valves).
5) Other requirements to meet electro-mechanical services interface.

4.10 Fire Officer

4.10.1 A qualified Fire Officer with experience of not less than 3 years shall be appointed who will be available on the premises, for large educational complexes, business buildings with height 30 m and above, residential building with height 60 m and above, institutional buildings of 15 m and above, starred hotels and D-6 occupancy.

4.10.2 The Fire Officer shall,

a) maintain the firefighting equipment in good working condition at all times.
b) prepare fire orders and fire operational plans and get them promulgated.
c) impart regular training to the occupants of the buildings in the use of firefighting equipment provided on the premises and keep them informed about the fire emergency evacuation plan.
d) keep proper liaison with the city fire brigade.
e) ensure that all fire precautionary measures are observed at the times.

NOTE — Competent authority having jurisdiction may insist on compliance of the above rules in case of buildings having very large areas even if the height is less than 30 m.

4.11 Fire Drills and Fire Orders

Fire notices/orders shall be prepared to fulfil the requirements of firefighting and evacuation from the buildings in the event of fire and other emergency. The occupants shall be made thoroughly conversant with their action in the event of emergency, by displaying fire notices at vantage points and also through regular training. Such notices should be displayed prominently in bold lettering.

For guidelines for fire drills and evacuation procedures for high rise buildings, *see* Annex D.

5 FIRE PROTECTION

5.1 Fire Extinguishers/Fixed Firefighting Installations

5.1.1 All buildings depending upon the occupancy use and height shall be protected by fire extinguishers, hose reels, wet riser, down-comer, yard hydrants, automatic sprinkler installation, deluge system, high/medium velocity water spray, foam, water mist systems, gaseous or dry powder system, manual/automatic fire alarm system, etc, in accordance with the provisions of various clauses given below, as applicable:

a) These fire extinguishing equipment and their installation shall be in accordance with accepted standards [4(17)]. The extinguishers shall be mounted at a convenient height to enable its quick access and efficient use by all in the event of a fire incidence. The requirements of fire extinguishers/yard hydrant systems/wet riser/down-comer installation and capacity of water storage tanks and fire pumps, etc, shall be as specified in Table 7. The requirements regarding size of mains/risers shall be as given in Table 8. The typical arrangements of down-comer and wet riser installations are shown in Fig. 13. The wet riser shall be designed for zonal distribution ensuring that unduly high pressures are not developed in risers and hose-pipes.
b) First-aid firefighting appliances shall be provided and installed in accordance with good practice [4(18)]. The firefighting equipment and accessories to be installed in buildings for use in firefighting shall also be in accordance with the accepted standard [4(17)] and shall be maintained periodically so as to ensure their perfect serviceability at all times.
c) Valves in fixed firefighting installations shall have supervisory switch with its signalling to fire alarm panel or to have chain(s), pad lock(s), label and tamper-proof security tag(s) with serial number to prevent tampering/unauthorized operation. These valves shall be kept in their intended 'open' position.
d) In addition to wet riser or down-comer, first-aid hose reels shall be installed in buildings (where required under Table 7) on all the floors, in accordance with accepted standard [4(19)]. The first-aid hose reel shall be

connected directly to the riser/down-comer main and diameter of the hose reel shall not be less than 19 mm.

e) Wet risers shall be interconnected at terrace level to form a ring and cut-off shall be provided for each connection to enable repair/ maintenance without affecting rest of the system.

f) Pressure at the hydraulically remote hydrant and at the highest hydrant shall not be less than 3.5 bar. The pressure at the hydrants shall however not exceed 7.0 bar, considering the safety of operators. It may be planned to provide orifice plates for landing valves to control pressure to desired limit especially at lower levels; this could also be achieved through other suitable means of pressure reducing devices such as pressure controlled hydrant valves.

g) Hydrants for firefighting and hose reels shall be located in the lobby in firefighting shaft. Those hydrants planned to be provided near fire exit staircase on the floor shall be within 5 m from exit door in exit access. Such hydrant cabinet may finish with doors to meet interior finishes with requirement of glass panel to provide visibility to the installations inside and inscribed with the word: 'FIRE HOSE CABINET' of letter size 75 mm in height and 12 mm in width. Such door of the fire hose cabinet need not be fire resistant rated. The location of such cabinets shall be shown on floor plan and duly displayed in the landing of the respective fire exit staircase.

5.1.2 *Static Water Storage Tanks and Pump House*

5.1.2.1 *Static water storage tanks*

A satisfactory supply of water for the purpose of firefighting shall always be available in the form of underground/terrace level static storage tank with capacity specified for each building with arrangements or replenishment.

Water for the hydrant services shall be stored in an easily accessible surface/underground lined reservoir or above ground tanks of steel, concrete or masonry. The effective capacity of the reservoir above the top of the pump casing (flooded suction) for various types of occupancies shall be as indicated in Table 7.

Water for firefighting shall be stored in two or more interconnected compartments of equal size to facilitate cleaning and maintenance of the tanks without interrupting the water availability for firefighting.

To prevent stagnation of water in the static water storage tank, the suction tank of the domestic water supply shall be fed only through an overflow arrangement from the fire water storage tanks to maintain the level therein at the minimum specified capacity.

Alternatively, domestic and fire water can be stored in two interconnected compartments as mentioned above. The suction inlet(s) for the domestic water pumps shall be so located at an elevation that minimum water requirements for firefighting as stated in Table 7 will be always available for fire pumps.

The static storage water supply required for the above mentioned purpose shall entirely be accessible to the fire engines of the local fire service. Suitable number of manholes shall be provided for inspection, repairs, insertion of suction hose, etc. As an alternative to the arrangement of manholes to allow access from the top, suitable arrangement to enable efficient access to the tank by the firemen from the adjoining fire pump room having direct access from the ground level, shall be made. The underground fire water storage tank(s) shall not be more than 7 m in depth from the level having fire brigade draw-out connection, while the draw-out connection shall not be more than 5 m away from the tank wall.

The covering slab shall be able to withstand a total vehicular load of 45 t (or as applicable) equally divided as a four-point load when the slab forms a part of pathway/driveway.

The static water storage tank shall be provided with a fire brigade collecting head with 4 number 63 mm diameter (2 number 63 mm diameter for pump with capacity 1 400 litre/min) instantaneous male inlets arranged in a valve box at a suitable point at street level. The same shall be connected to the static tank by a suitable fixed galvanized iron pipe not less than 150 mm in diameter to discharge water into the tank when required at the rate of 2 250 litre/min, if tank is in the basement or not approachable for the fire engines.

Each of the static water storage tanks shall also be provided with a fire brigade draw out collecting head with 63 mm diameter instantaneous male draw out arranged in a valve box at a suitable point at street level. This draw out shall be connected to galvanized iron pipe of 100 mm diameter with foot valve arrangement in the tank.

5.1.2.2 *Firefighting pump house*

The requirements shall be as given below:

a) It is preferable to install the pump house at ground level. Pump house shall be situated so as to be directly accessible from the surrounding ground level.

b) Pump house shall be installed not lower than the second basement. When installed in the

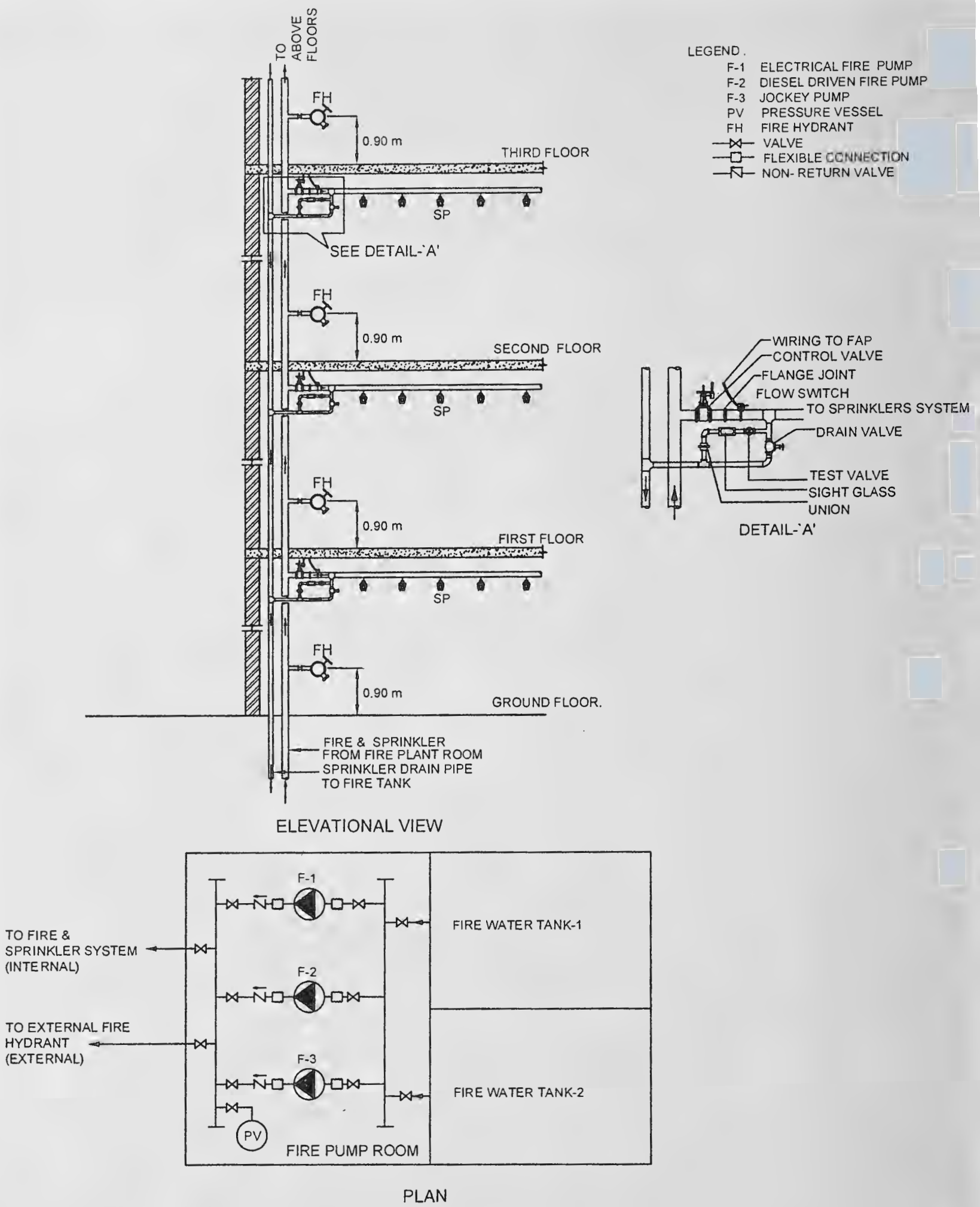

FIG. 11 TYPICAL SYSTEM OF PUMPING WITH ONE ELECTRIC, ONE DIESEL FIRE PUMP

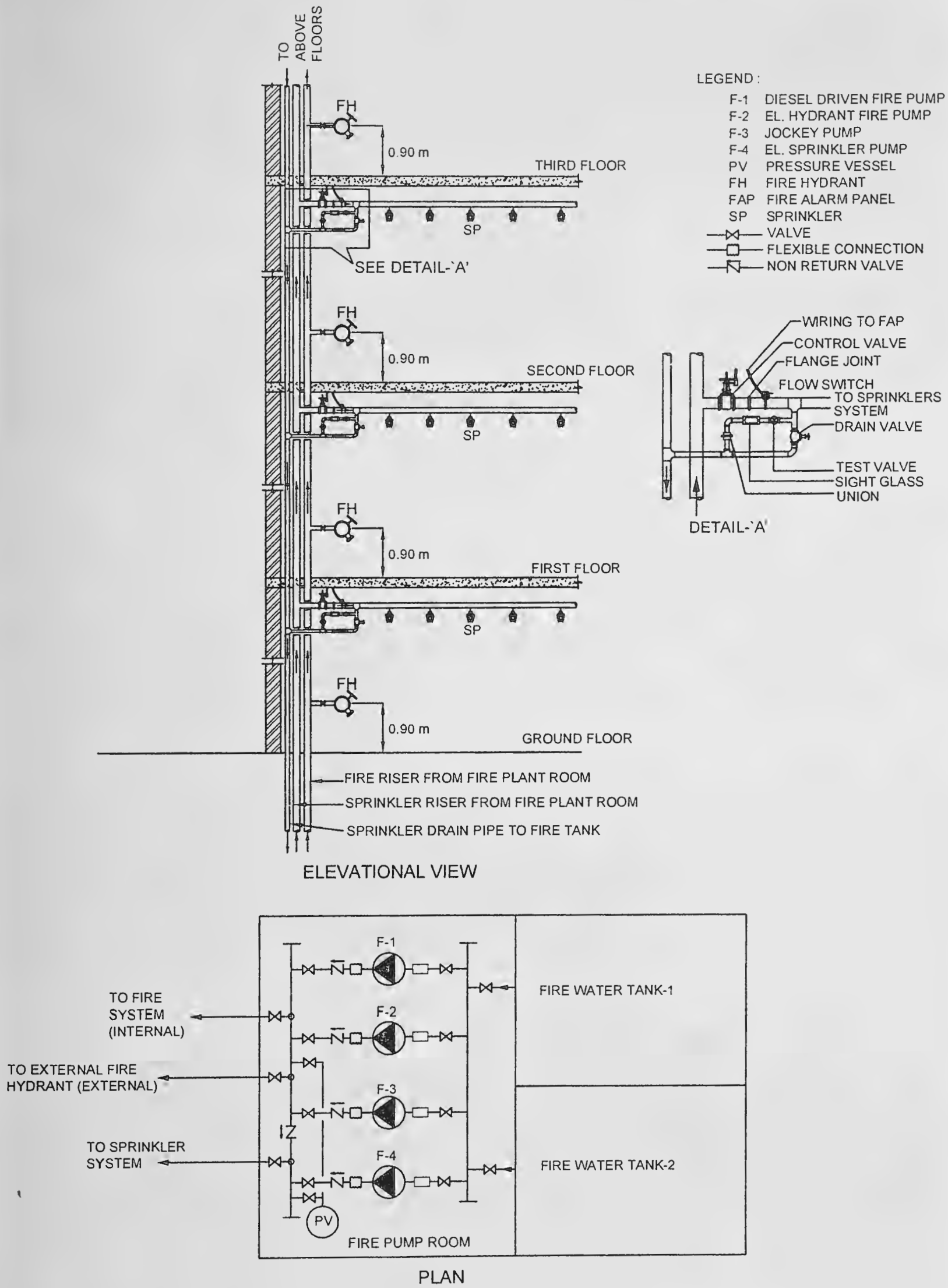

FIG. 12 TYPICAL SYSTEM OF PUMPING WITH TWO ELECTRIC, ONE DIESEL FIRE PUMP

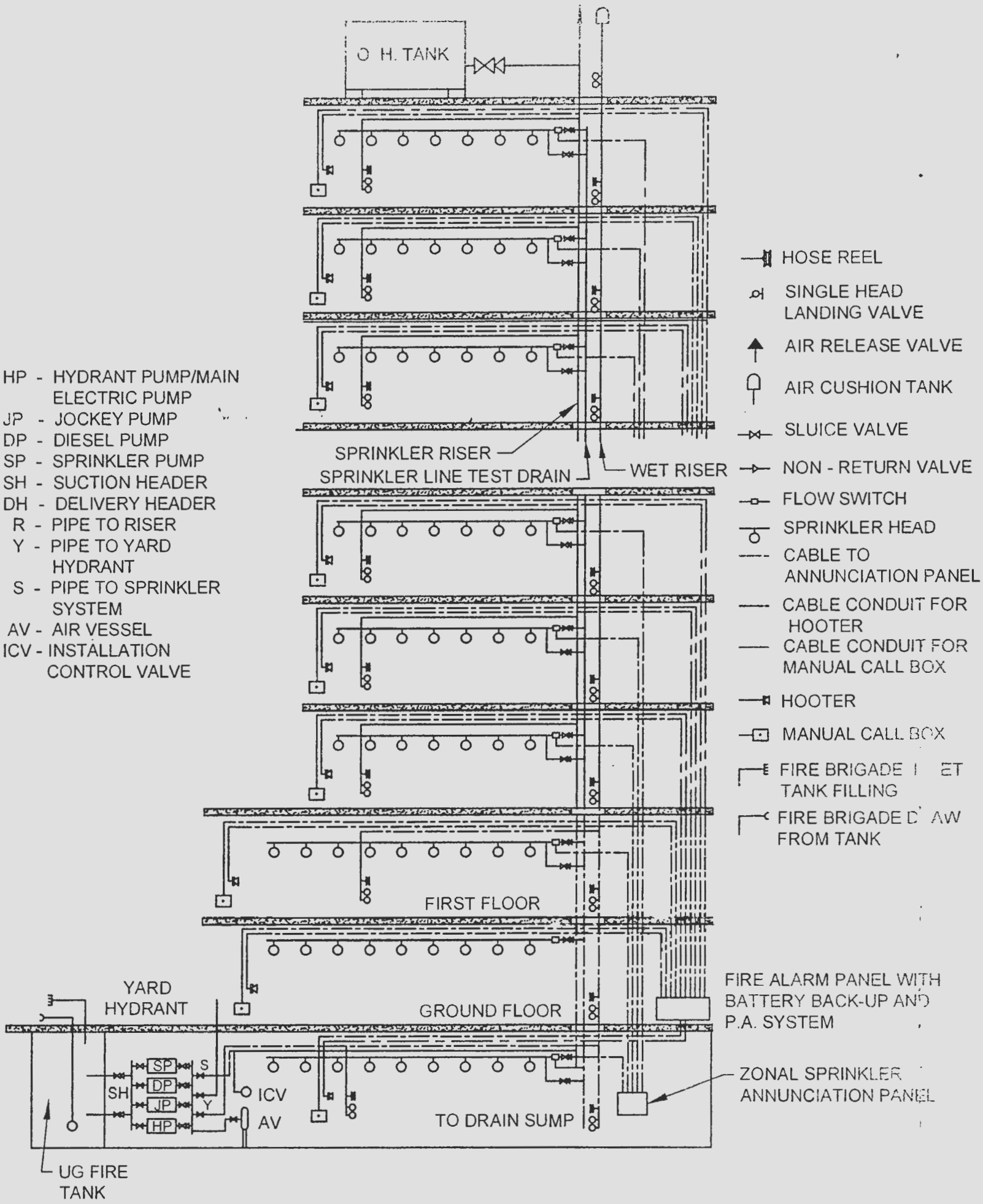

FIG. 13 TYPICAL ARRANGEMENT OF WET RISER AND TOTAL SPRINKLER SYSTEM OF BUILDING

Table 8 Size of Mains
[*Clause* 5.1.1(a)]

Sl No.	Size of the Mains mm	Type of Building	Remarks
(1)	(2)	(3)	(4)
i)	100 mm with single outlet landing valves	a) Residential building (A):	
		1) Dormitories	—
		2) Apartments	—
		3) Hotels	Up to 45 m height
		b) Educational buildings (B)	—
		c) Institutional buildings (C)	Up to 30 m height
		d) Assembly buildings (D)	—
		e) Business buildings (E)	Up to 45 m height
		f) Mercantile buildings (F)	—
		g) Industrial buildings (G)	Up to 15 m height
ii)	150 mm with single outlet landing valves	a) Hotels	Above 45 m height
		b) Starred hotels	—
		c) Institutional buildings (C)	Above 30 m height
		d) Business buildings (E)	Above 45 m height
		e) Industrial buildings (G)	Above 15 m height
		f) Storage buildings (H)	Up to 15 m height
		g) Hazardous buildings (J)	Up to 15 m height

basement, staircase with direct accessibility (or through enclosed passageway with 120 min fire rating) from the ground, shall be provided. Access to the pump room shall not require to negotiate through other occupancies within the basement.

c) Pump house shall be separated by fire walls all around and doors shall be protected by fire doors (120 min rating).

d) Pump house shall be well ventilated and due care shall be taken to avoid water stagnation.

e) No other utility equipment shall be installed inside fire pump room.

f) Insertions like flexible couplings, bellows, etc, in the suction and delivery piping shall be suitably planned and installed.

g) Installation of negative suction arrangement and submersible pumps shall not be allowed.

h) Pump house shall be sufficiently large to accommodate all pumps, and their accessories like PRVs, installation control valve, valves, diesel tank and electrical panel.

j) Battery of diesel engine operated fire pump shall have separate charger from emergency power supply circuit.

k) Exhaust pipe of diesel engine shall be insulated as per best engineering practice and taken to a safe location at ground level, considering the back pressure.

m) Fire pumps shall be provided with soft starter or variable frequency drive starter.

5.1.3 *Automatic Sprinkler Installation*

The requirements shall be as given below:

a) Automatic sprinklers shall be installed wherever required in terms of Table 7 throughout the building in accordance with good practice [4(20)].

b) If selective sprinklering is adopted, there is a real danger of a fire starting in one of the unsprinklered area gathering momentum spreading to other areas and reaching the sprinklered areas as a fully developed fire. In such an event, the sprinklers can be rendered useless or ineffective.

c) Automatic sprinklers shall be installed in false ceiling voids exceeding 800 mm in height.

d) Installation of sprinklers may be excluded in any area to be used for substation and DG set.

e) In areas having height 17 m or above such as in *atria*, sprinkler installations may be rendered ineffective and hence may be avoided.

f) Pressure in sprinkler system shall not exceed 12 bar or else high pressure sprinkler to be installed for above 12 bar operations.

g) The maximum floor area on any one floor to be protected by sprinklers supplied by any one sprinkler system riser from an installation control valve shall be based on system protection area limitations considering maximum floor area on any one floor to be 4 500 m^2 for all occupancies except industrial and hazardous occupancies, where Authorities

shall be consulted for advice based on type and nature of risk.

h) Sprinkler installation control valves, shall be installed inside the fire pump room.

j) For industrial buildings, such installation control valves may be installed outside the building and Authorities shall be consulted in situations where it is not possible to locate them inside the buildings. It is advisable to provide electrically operated siren for each valve outside the buildings in addition to water gongs in such case.

k) The sprinkler flow switches provided shall be monitored by fire alarm panel.

m) It is essential to make provisions for avoiding water from sprinkler/hydrant operation entering lifts and electrical rooms.

n) Ramps at all levels shall be protected with sprinklers.

5.1.4 *Automatic High Velocity and Medium Velocity Water Spray Systems*

Automatic high velocity water spray or emulsifying system shall be provided for protection of outdoor and/or indoor oil-cooled transformers as applicable in accordance with good practice [4(21)] where applicable (*see* Annex E). Also, medium velocity water spray system shall be provided for tankage (where applicable), conveyors, cable galleries and other occupancies listed in good practice [4(21)].

5.1.5 *Fixed Foam Installation*

Fixed foam generating system shall be provided for protection of oil storage area for boilers with its ancillary storage of furnace oils in basement. Fixed foam installations can be low, medium or high expansion types, which can be provided based on the type of fire hazards identified in the facility. High expansion foams are used for cable tunnels and other confined areas. Design and installation of foam systems shall be governed by good practice [4(22)].

5.1.6 *Gas Based Suppression System*

Gas based fire extinguishing installation shall be provided in accordance with good practice on premises where water or foam cannot be used for fire extinguishing because of the special nature of the contents of the buildings/areas to be protected where either the building(s) have very limited manpower or unmanned. The protection design for fixed carbon dioxide fire extinguishing system shall conform to good practice [4(23)] in all respects. For some special fire risk/essential applications, carbon dioxide may not be suitable and alternate provisions shall be made as per relevant standards (*see* **5.1.9**).

5.1.7 Firefighting equipment shall be suitably located and clearly marked by luminous signs.

5.1.8 *Automatic Water Mist Systems*

These systems involve the use of fine water sprays for the efficient extinguishment of fires. These systems may be provided to protect areas in buildings for the uses as specified in good practice [4(24)].

5.1.9 *Extinguishing Systems with Clean Agents*

Alternative systems for halon gas protection systems shall be provided where necessary as prescribed in this Part. These shall be in accordance with the accepted standards [4(25)].

5.2 Fire Detection and Alarm System

See **4.9**.

5.3 The fixed firefighting installations and systems shall be maintained in accordance with good practice [4(26)] and the Part 12 'Asset and Facility Management' of the Code.

6 ADDITIONAL OCCUPANCY WISE REQUIREMENTS

In addition to the general requirements on fire prevention given in **3**, the life safety requirements given in **4**, and the fire protection requirements given in **5**, the following additional requirements shall also be complied with for each type of occupancy.

For additional requirements for high rise buildings, the provisions as given in Annex E shall apply.

Atriums in building occupancies shall comply with the provisions as given in Annex F.

For fire protection requirements of commercial kitchen, cooking facilities with or without restaurants, the provisions of Annex G shall be referred.

6.1 Residential Buildings (Group A)

6.1.1 *Life Safety*

6.1.1.1 *Subdivision A–1*

a) All locking devices, which would impede or prohibit exit, such as chain type bolts, limited opening sliding type locks and burglar locks, which are not disengaged easily by quick-releasing catches, shall be prohibited.

b) All bathroom door locks or fasteners shall be designed to permit the opening of the locked or closed door from the outside in an emergency without the use of a special key.

c) No lodging or rooming house shall have its sole means of egress pass through any non-residential occupancy in the same building.

d) Rooming and lodging houses having floor area of 500 m^2 on any one or more floors shall have access to minimum two separate means of exits, at least one of which shall be so arranged as to have direct exit discharge.

6.1.1.2 *Subdivision A-3*

a) Requirements of **6.1.1.1** shall be applicable.

b) All sleeping rooms having occupancy of more than 10 persons shall have two separate and distinct exit access in different directions.

6.1.1.3 *Subdivision A-4*

In case of high rise apartments, of the minimum exits as specified in **4.4.2.4.3.1**, the naturally ventilated exit staircases may not require the provision of fire door. However, fire door shall be provided for all other staircases and pressurized staircases.

6.1.1.4 *Subdivision A-5*

a) Panic bars shall be provided in the fire exits. Panic bars shall be located at a height between 865 mm and 1 220 mm from the floor level.

b) All guest rooms and suites shall be protected by extended throw, quick response type sprinklers only. Also these areas shall be provided with audio-based detectors, having a sound level of at least 75 dB.

c) Horizontal-sliding doors shall not be used for door openings across corridors.

6.1.2 *Additional Precautions*

a) Flammable liquids for household purposes shall be kept in tightly stoppered or sealed containers. For the limits of quantities of flammable liquids to be allowed in various occupancies, reference may be made to appropriate regulations.

b) No stove or combustion heater shall be located directly under or immediately at the foot of stairs or otherwise so located as to block escape in case of malfunctioning of the stove or heater.

c) All kitchen exhaust fans, where provided, shall be fixed to an outside wall or to a duct of non-combustible material, which leads directly to the outside. The ducts shall not pass through areas having combustible materials. However, in case of centralized ducting, the duct shall be provided with adequate protection to limit the spread of fire.

d) Stores, engineering workshops, areas of high hazard, etc used for storage of substantial amount of flammable liquids shall be of 120 min fire resistance rating wall. Such areas shall be provided with fire doors, to be kept closed and shall be posted with a sign on each side of the door in 25 mm high block letters stating — 'FIREDOOR — KEEP CLOSED'.

6.2 Educational Buildings (Group B)

6.2.1 *Fire Prevention*

a) Buildings intended for educational occupancy shall not be used for storage of any hazardous material.

b) Gymnasiums, indoor stadiums and similar occupancies are permitted to have floors/ running tracks of wood, cinder, synthetic or the like.

6.2.2 *Life Safety*

a) Every room with a capacity of over 45 persons in area shall have at least two doorways. Exit doors shall be operated by panic bars except that doors leading from classrooms directly to the outside may be equipped with the same type of lock as is used on classroom doors leading to corridor, with no provision whatsoever for locking against egress from the classroom.

b) A building, which will have only the first floor and is accessible to not more than 20 pupils at any time, may be used for school purposes with the following exceptions:

   1) Exterior walls or parts of walls which are less than 900 mm from adjacent property lines shall have no openings therein.

   2) Classrooms may have only one exit not less than 900 mm wide.

c) Rooms or areas for use by the preschool, kindergarten, Class/Grade 1 students shall be located on ground floor/level of exit discharge. Rooms or areas occupied by Class/Grade II students shall be located not above one floor higher than ground floor/level of exit discharge.

d) Of the minimum exits as specified in **4.4.2.4.3.1**, the naturally ventilated exit staircases, may not require provision of fire door. However, fire door shall be provided for all other staircases and pressurized staircases.

6.2.3 *Additional Precautions*

a) Storage of volatile flammable liquids shall be prohibited and the handling of such liquids shall be restricted to science laboratories only.

b) All exterior openings in a boiler room or rooms containing central heating equipment,

if located below an opening in another storey or if less than 3 m from other doors or windows of the same building, shall be protected by a fire assembly as in **3.4.5**. Such assemblies shall be of fixed, automatic or self-closing type.

6.3 Institutional Buildings (Group C)

6.3.1 *Fire Prevention*

No combustible material of any kind shall be stored or used in any building or section thereof used for institutional occupancy, except as necessary to normal occupancy and use of the building.

6.3.2 *Life Safety*

a) The common path of travel shall be 30 m. The maximum dead end of corridor distance shall not exceed 6 m.

b) Principle of progressive horizontal evacuation is of paramount consideration for hospital patients particularly those lacking self-preservation. This calls for moving occupants from a fire affected area to an adjoining area at the same level through a fire resistant wall, to protect them from the immediate dangers of fire and smoke (*see* Fig. 14).

c) Progressive horizontal evacuation operates on the basis of evacuation from compartment to compartment and on use of adjacent compartments as temporary means of refuge. All compartments shall be divided with self-closing (door closers) fire doors with electromagnetic hold open. A coordinator shall be provided to sequence the closing of double leaf in case of emergency.

d) Doors in fire resistant walls shall be so installed that these may normally be kept in open position, but will close automatically. Corridor door openings shall be not less than 2.0 m in width of double swing double leaf type door. A coordinator shall be provided as above, for closing of double leaf in case of emergency.

e) Exits and other features for penal and mental institutions, and custodial institutions shall be the same as specified for hospitals [*see* **6.3.2** (g)], in so far as applicable. Reliable means shall be provided to permit the prompt release of inmates from any locked section in case of fire or other emergency.

f) All buildings or sections of buildings in penal and mental institution used for manufacturing, storage or office purposes shall have exits in accordance with the provisions of the Code for those occupancies.

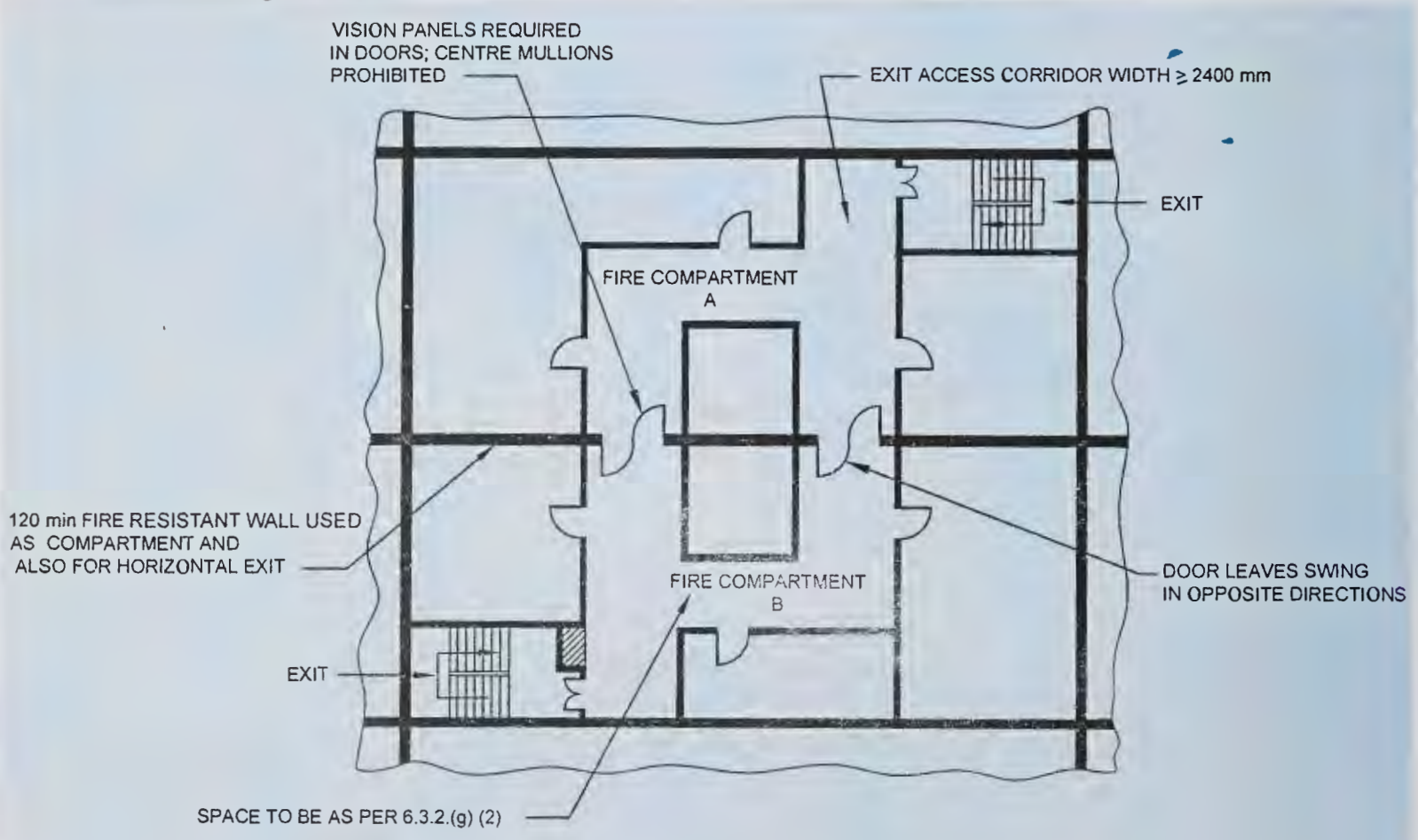

FIG. 14 PART PLAN INDICATING CONCEPT OF HORIZONTAL EXIT IN HOSPITAL

g) For hospitals (Subdivision C-1), the following shall also be complied with:

1) Compartmentation shall meet the requirement as per **4.5.2**.

2) Each compartment (*see* **4.5.2**) shall be able to accommodate, in addition to its own, the patients from adjoining compartment also considering 3.5 m^2 per person. If patients are not bed-ridden, a factor of 0.6 m^2 per person is recommended.

3) All critical patients and those incapable of self-preservation and having physical impairment shall be housed within 30 m height.

4) Other types of patients and occupancies incidental to the hospitals such as consultation rooms, nurses' stations, medical shops, canteens, etc may be housed at heights beyond 30 m but not more than 45 m.

5) Basement shall not be used to store flammables or for pathological or other laboratories particularly those involving usage of chemicals.

6) Operation theatres, delivery rooms, Intensive care units, recovery rooms, etc, that containing patients lacking self-preservation in case of emergencies shall be fire/smoke separated (120 min minimum rating) from all the adjoining areas.

7) Aisles, corridors, ramps, etc, through which patients are moved, shall have a minimum width of 2.4 m throughout. Aisles, corridors, and ramps in other areas not intended for the housing, treatment, or use of inpatients shall be not less than 1.5 m in width.

8) All exits from hospital or infirmary sections shall be not less than 2.0 m in width.

9) Minimum width of door of single or double occupancy patient room shall be 1.25 m while for the wards for 3 to 5 patient beds shall be 1.50 m, to permit movement of patients. The minimum width of door for wards for more than 5 patient beds and for areas necessarily requiring patient evacuation on bed (such as ICU, recovery units, delivery rooms, etc), shall have door width of 2.0 m. The width of 2.0 m may be reduced to minimum of 1.5 m where two such doors are provided in such areas.

10) Any sleeping accommodation or suite exceeding 100 m^2 in area shall have at least two doorways leading to the exit access corridors.

11) Floor surface of corridors shall not be inclined at a gradient steeper than 1 in 12 to the horizontal.

12) Exit access corridors from a compartment to another compartment shall be divided at the compartment intersection by a fire door of 120 min fire rating in the fire compartment wall.

13) Rooms designated for laboratory and the like shall not exceed 100 m^2 in area and if additional space is required, fire separation of 120 min shall be provided.

14) Storage of flammable liquids in laboratories or in any other area shall be not more than 3 litre for every 10 m^2 area.

15) Disposal of any equipment and other (particularly hazardous) materials shall be accomplished in the premises by a disposal specialist or at a safe location away from the health care facility by competent personnel using procedures established in concurrence with the safe practices.

16) A stretcher lift in a lift bank shall also act as fireman's lift meeting the requirements of Part 8 'Building Services, Section 5 Installation of Lifts, Escalators and Moving Walks, Subsection 5A Lifts' of the Code.

h) *Progressive evacuation strategy — See* Fig. 15, in which, as an example, the exit calculations at two locations shall be based on requirements of total occupancy for area (A, B and C) divided by 2 considering progressive evacuation strategy.

6.3.3 *Exception and Deviation*

It is recognized that in institutions or part of buildings housing various types of psychiatric patients, or used as mental institutions and penal institutions, it is necessary to maintain locked doors and barred windows; and to such extent the necessary provision in other sections of the code requiring the keeping of exits unlocked may be waived. It is also recognized that certain type of psychiatric patients are not capable of seeking safety without adequate guidance. In buildings where this situation prevails, reliable means for the rapid release of occupants shall be provided, such as remote control of locks, or by keying all locks to keys commonly used by attendants.

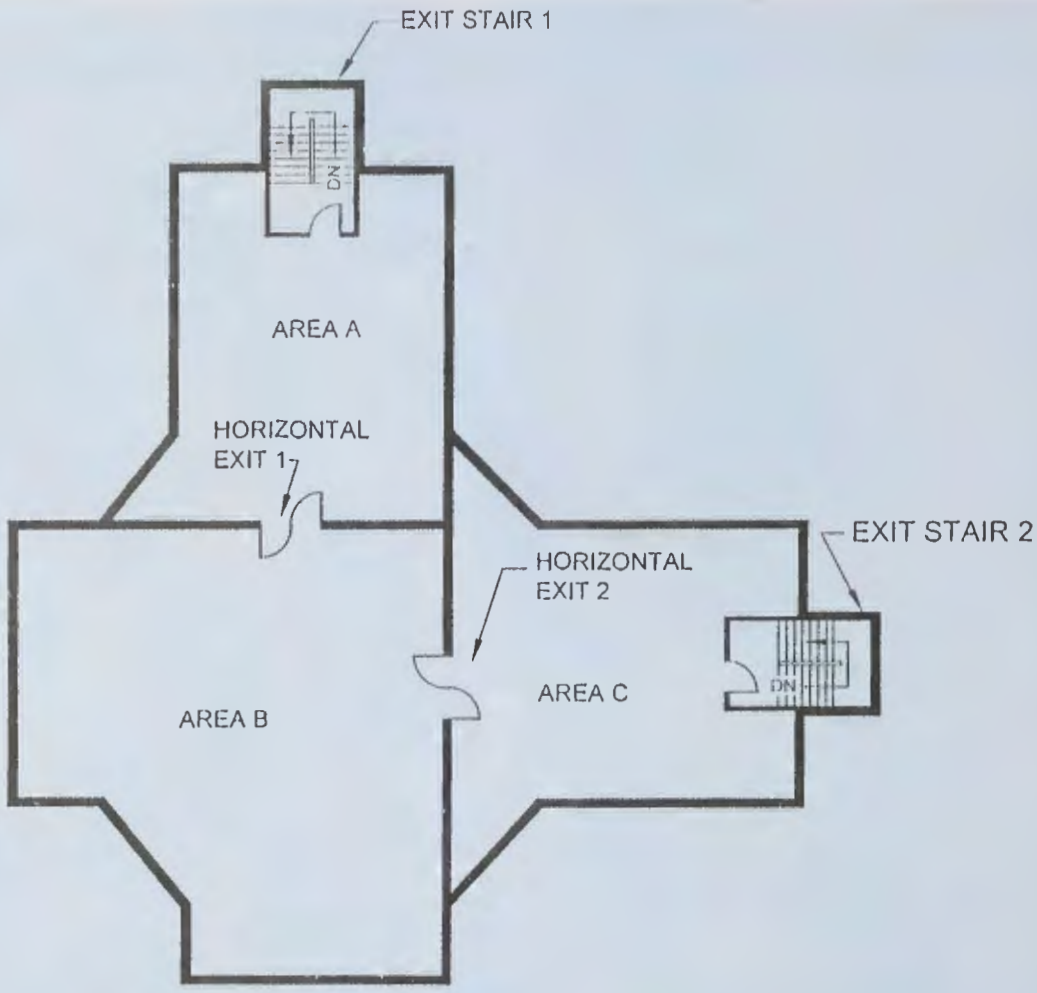

FIG. 15 MINIMUM OF TWO EXITS ACCESSIBLE FROM ALL PARTS OF FLOOR

6.4 Assembly Buildings (Group D)

6.4.1 *Fire Prevention*

6.4.1.1 The following shall be applicable:

a) Decorations of places of assembly shall be of non-flammable materials. Fabrics and papers used for such purpose shall be treated with an effective flame-retardant material. Stage settings made of combustible materials shall likewise be treated with fire retardant materials of Class 1 flame spread.

b) Gymnasiums, indoor stadiums and similar occupancies are permitted to have floors/ running tracks of wood, cinder, synthetic or the like.

6.4.1.2 *Additional fire prevention requirements for D-6 occupancy*

Building having D-6 mixed use assembly/mercantile occupancy will limit the height of the assembly/ mercantile occupancy portion of the buildings to 30 m. Above this height the buildings may be used for business or residential occupancies with 240 min separation. Independent exits shall be provided for such occupancy above 30 m and shall not interface with exits of assembly/mercantile occupancy.

6.4.2 *Life Safety*

6.4.2.1 The following shall be applicable:

a) Exit door width for assembly buildings shall not be less than 2.0 m.

b) Every place of assembly of sub-division D-1 shall have at least four separate exits as remote from each other as practicable.

c) Every place of assembly of sub-division D-2 shall have at least two separate exits as remote from each other as practicable and if of capacity over 600, at least three exits shall be provided with each exit not less than of 2.0 m width.

d) Clear aisles not less than 1.2 m in width shall be formed at right angles to the line of seating in such number and manner that no seat shall be more than seven seats away from an aisle. Rows of seats opening on to an aisle at one end only shall have not more than seven seats. Under the conditions, where all these aisles do not directly meet the exit doors, cross-aisles shall be provided parallel to the line of seating so as to provide direct access to the exit, provided that not less than one cross aisle for every 10 rows shall be required. The width of cross-aisles shall be minimum of 1 m. Steps shall not be placed in aisles to overcome differences in levels, unless the gradient exceeds 1 in 10.

e) The fascia of boxes, balconies and galleries shall have substantial railings not less than 1 000 mm high above the floor. The railings at the end of aisles extending to the fascia shall be not less than 1 100 mm high for the width of the aisle or 1.2 m high at the foot of steps.

f) Cross-aisles, except where the backs of seats on the front of the aisle project 600 mm or more above the floor of the aisle, shall be provided with railings not less than 900 mm high.

g) No turnstiles or other devices to restrict the movement of persons shall be installed in any place of assembly in such a manner as to interfere in any way with the required exit facilities.

h) In theatres and similar places of public assembly where persons are admitted to the building at a time when seats are not available for them and are allowed to wait in a lobby or similar space until seats are available, such use of lobby or similar space shall not encroach upon the required clear width of exits. Such waiting shall be restricted to areas separated from the required exit ways by substantial permanent partitions or fixed rigid railing not less than 1 050 mm high. Exits shall be provided for such waiting spaces on the basis of one person for each 0.3 m^2 of waiting space area. Such exits shall be in addition to the exits specified for the main auditorium area and shall conform in construction and arrangement to the general rules of exits given above.

j) No display or exhibit shall be so installed or operated as to interfere in any way with access to any required exit, or with any required exit sign.

k) All displays or exhibits of combustible material or construction and all booths and temporary construction in connection therewith shall be so limited in combustibility or protected as to avoid any undue hazard of fire which might endanger occupants before they have opportunity to use the available exits, as determined by the authority.

m) Places of assembly in buildings of other occupancy may use exits common to the place of assembly and the other occupancy, provided the assembly area and the other occupancy are considered separately, and each has exits sufficient to meet the requirements of the Code.

n) Exits shall be sufficient for simultaneous occupancy of both the places of assembly and other parts of the building.

p) For detailed information regarding cinema buildings, reference may be made to good practice [4(27)].

q) Seats in places of public assembly, accommodating more than 300 persons, shall be securely fastened to the floor, except as permitted in (r) below. All seats in balconies and galleries shall be securely fastened to the floor, except that in nailed-in enclosures, boxes with level floors and having not more than 14 seats, the seats need not be fastened.

r) Chairs not secured to the floor may be permitted in restaurants, night clubs and other occupancies where the fastening of seats to the floor may not be practicable, provided that in the area used for seating, excluding dance floor, stage, etc, there shall be not more than one seat for each 1.4 m^2 of floor area and adequate aisles to reach exits shall be maintained at all times. The arrangements shall be as follows in general:

   1) Rows of seats between aisles shall have not more than 14 seats.
   2) Rows of seats opening on to an aisle at one end only shall have not more than 7 seats.
   3) Seats without dividing arms shall have their capacity determined by allowing 450 mm per person.

s) The spacing of rows of seats from back to back shall be neither less than 850 mm nor less than 700 mm plus the sum of the thickness of the back and inclination of the back. There shall be a space of not less than 350 mm between the back of one seat and the front of the seat immediately behind it as measured between plumb lines.

t) *Lighting* — No open flame lighting devices shall be used in any place of assembly, except in the following cases:

   1) Where necessary for ceremonial purposes, the enforcing Authority may permit open flame lighting under such restrictions as are necessary to avoid danger of ignition of combustible materials or injury to occupants.
   2) Candles may be used on restaurant tables if securely supported on non-combustible bases and so located as to avoid danger of ignition of combustible materials.
   3) Open flame devices may be used on stages where they are a necessary part of

theatrical performance, provided adequate precautions, satisfactory to the Authority aretaken to prevent ignition of combustible materials.

6.4.2.2 *Life safety provisions for D-6 occupancy*

The following additional requirements shall be applicable:

a) Assembly occupancies of theatres, cinema halls and multiplexes shall be so located in the mall building that their exits will be separate and lead the occupant directly to exit discharge.

b) The common path of travel shall be 30 m. The maximum dead end of corridor distance shall not exceed 6 m.

c) The minimum width of an exit passageway shall be 2.0 m.

d) Where wheeled carts or buggies are used by customers, adequate provision shall be made for the transit and parking of such carts to minimise the possibility that they might obstruct means of egress. Any other storage or hindrances causing obstruction in exits shall be avoided.

e) Car parking facilities shall comply with Annex H. Car parking areas at upper levels adjacent to shops, food courts or multiplex shall be separated by 120 min fire rated construction and building elements.

f) 50 percent lifts in common areas in D-6 shall be with features and requirement of fireman's lift.

g) The manual call points shall be break glass and not pull stations.

h) Photoluminescent markings shall be done along the width and length of treads in all enclosed exits staircases. Exit directional arrow on the wall (in the direction of egress) shall be 175 mm × 50 mm.

j) Refuge area to be provided on the floor at or immediately above 18 m shall be not less than 10 percent of gross area of floor. Next refuge area to be at/on the floor immediately above 24 m. The refuge area shall be 10 percent of the respective floor, which may be divided into two or more separate refuge areas at each of the respective floors, with each being not less than 100 m^2. Refuge area shall also meet all the requirements of life safety as per **4**.

6.4.3 *Fire Protection*

a) Every stage equipped with fly galleries, grid irons and rigging for movable theatre type scenery, shall have a system of automatic sprinklers over and under such stage areas or spaces and auxiliary spaces, such as dressing rooms, store rooms and workshops, and the proscenium opening shall be provided with a fire resisting curtain, capable of withstanding a lateral pressure of 4 kN/m^2 over the entire area. The curtain shall have an emergency closing device capable of causing the curtain to close without the use of power and when so closed, it shall be reasonably tight against the passage of smoke.

b) The stage roof of every theatre using movable scenery or having a motion picture screen of highly combustible construction shall have a ventilator or ventilators in or above it, openable from the stage floor by hand and also opening by fusible links or some other approved automatic heat/smoke actuated device, to give a free opening equal to at least one-eighth the area of the floor of the stage.

c) The proscenium wall of every theatre using movable scenery of decorations shall have, exclusive of the proscenium opening, not more than two openings entering the stage, each not to exceed 2 m^2 and fitted with self-closing fire resistant doors.

d) Every place of assembly in which projection of motion pictures by light is made shall have the projection apparatus enclosed in a fire resisting fixed booth in accordance with good practice [4(27)], except that such booth shall not be required where no nitrocellulose motion picture film is used.

6.4.4 *Fire Protection and Firefighting System for Metro Stations (D-7 Occupancy)*

Fire and life safety requirements for metro stations and metro trainways shall be in accordance with Annex J and Annex K, respectively.

6.5 Business Buildings (Group E)

6.5.1 *Life Safety*

Not less than two exits shall be provided for every floor, including basements occupied for office purposes or uses incidental thereto.

6.5.2 *Fire Protection*

a) For Subdivision E-2, the requirement shall be provision of automatic fire detection alarm system, while for fire protection, CO_2 and/or foam based installation to be planned based on the requirements.

b) For Subdivision E-3, E-4 and E-5, the requirement shall be provision of automatic

fire detection alarm system, while for fire protection, any or combination of clean agents, mist technologies, hypoxic air technology, etc, may be planned for appropriate/special situations/locations. Electrical panels may be provided with CO_2/inert gas flooding system based on the requirement and reliability of power for the functional requirement and performance.

6.6 Mercantile Buildings (Group F)

6.6.1 *Life Safety*

6.6.1.1 Open air mercantile operations, such as open air markets, petrol filling stations, roadside stands for the sale of a farm produce and other outdoor mercantile operations shall be so arranged and conducted as to maintain free and unobstructed ways of travel at all times to permit prompt escape from any point of danger in case of fire or other emergency, but no dead-ends in which persons might be trapped due to display stands, adjoining buildings, fences, vehicles or other obstructions.

6.6.1.2 If such mercantile operations are conducted in roofed-over areas, these shall be treated as mercantile buildings, provided canopies over individual small stands to protect merchandise from the weather shall not be construed to constitute buildings for the purpose of the Code.

6.6.2 *Exception and Deviation*

Any mercantile occupancy, where goods of a highly hazardous nature are predominant, shall be considered under Group J occupancy for the purpose of the Code.

6.7 Industrial Buildings (Group G)

6.7.1 *Fire Prevention*

6.7.1.1 *Fire separating walls, fire separating floors and fire partitions*

Fire separating walls shall be provided between two buildings or between two blocks inside a building, having different fire hazards in accordance with the provisions of this Part. The areas having storage, manufacturing, hazardous activities such as paint store, oil storage, spray booths, etc, shall be separated from non-hazardous areas like administrative office, staff canteen, etc by fire rated walls/doors of 120 min fire resistance rating. The fire resistance rating of high hazardous areas like petrochemical, explosives shall be 240 min.

The fire separating wall where provided shall comply with the following requirements:

a) The separating wall shall be carried through the roof. This portion of the wall extending above the roof, known as 'screen wall' shall be of such a height (in no case less than 600 mm) that the horizontal distance at the level of the top of the screen wall between the roofs of the buildings/compartments being segregated is at least 6 m.

b) The screen wall shall be of not less than 230 mm in thickness if it is an extension of a masonry wall, and not less than 150 mm in thickness if it is an extension of a reinforced concrete wall.

c) The separating wall need not be extended as a screen wall if the roof of one or both of the buildings/blocks being segregated is of reinforced concrete construction (RCC).

d) In the case of buildings of unequal height, windows or other openings in the wall of the higher building overlooking the roof of the lower building and within 6 m, thereof, shall be protected by fire resistant glass assembly or by approved type fire doors unless the roof of the lower building is of reinforced concrete.

e) In case the eaves of the higher building fall within 6 m of the roof of the lower building such eaves should be cut-off and the screen wall raised as a parapet, 600 mm high over the roof of the higher building, unless the roof of the lower building is of RCC construction.

f) Fire separating walls shall also be extended outwards on both sides by at least 450 mm.

g) Doors and window openings in external walls within 3 m of the fire separating walls shall be protected by fire doors having a rating of at least 60 min and window openings may be protected by fire resistant glass assembly having same fire rating.

h) In the case of buildings/compartments having north-light roofs when a separating wall runs parallel to the axis of the north-light opening, the screen wall shall be carried through and 600 mm above the ridge of the north light. If, however, the separating wall is at right angles to the axis of the north-light opening, the saw tooth gaps shall be bricked up and the screen wall extended 600 mm above the ridge of the north light as well as beyond the extreme north-light opening.

j) Similarly, the thickness of the floor slabs in case of buildings having upper levels shall be designed to provide fire rating as mentioned above.

k) Storage areas shall be separated from the remainder of the building/block by fire walls.

m) Moderate and high hazard areas in industries to have two fire doors each having 180 min fire resistance rating.

6.7.2 *Life Safety*

6.7.2.1 In buildings used for aircraft assembly or other occupancy requiring undivided floor areas so large that the distances from points within the area to the nearest outside walls where exit doors could be provided are in excess of 45 m, requirements for distance to exits may be satisfied by providing stairs leading to exit tunnels or to overhead passageways. In cases where such arrangements are not practicable, the Authority may, by special ruling, permit other exit arrangements for single storeyed buildings with distances in excess of the maximum distances specified in **4**, if completely automatic sprinkler protection is provided and if the heights of ceiling curtain boards and roof ventilation are such as to minimise the possibility that employees will be overtaken by the spread of fire or smoke within 1.8 m of the floor level before they have time to reach exits, provided, however, that in no case may the distance of travel to reach the nearest exit exceed 65 m where smoke venting is required as a condition for permitting distances of travel to exits in excess of the maximum otherwise allowed.

6.7.2.2 The following shall apply to special purpose industrial occupancies:

a) Exits need be provided only for the persons actually employed; spaces not subject to human occupancy because of the presence of machinery or equipment may be excluded from consideration.

b) Where unprotected vertical openings are necessary to manufacturing operations, these may be permitted beyond the limits specified for industrial occupancy, provided every floor level has direct access to one or more enclosed stairways or other exits protected against obstruction by any fire in the open areas connected by the unprotected vertical openings or smoke therefrom.

6.7.2.3 The following shall apply to high hazard industrial occupancies:

a) From every point in every floor area, there shall be at least two exits accessible in different directions; where floor areas are divided into rooms, there shall be at least two ways of escape from every room, however small rooms, except toilet rooms, so located that the points of access thereto are out of or suitably shielded from areas of high hazard.

b) In addition to types of exits for upper floors specified for Group G occupancies, slide escapes may be used as required exits for both new and existing buildings.

NOTE — All high hazard industrial occupancies shall have automatic sprinkler protection or such other protection as may be appropriate to the particular hazard, including explosion venting for any area subject to explosion hazard, designed to minimise danger to occupants in case of fire or other emergency before they have time to utilize exits to escape.

6.7.3 *Additional Precautions*

a) In any room in which volatile flammable substances are used or stored, no device generating a glow or flame capable of igniting flammable vapour shall be installed or used, such a room shall be provided with a suitably designed exhaust ventilation system (*see* Annex M).

b) For detailed information on fire safety of certain individual (specific) industrial occupancies, reference may be made to good practice [4(28)].

c) Fire protection considerations for venting industrial occupancies shall be as in Annex M.

6.8 Storage Buildings (Group H)

6.8.1 *Life Safety*

6.8.1.1 Every area used for the storage of hazardous commodities shall have an exit within 22.5 m of any point in the area where persons may be present or 35 m where automatic sprinkler protection is provided.

6.8.1.2 Every storage area or space exceeding 1 400 m^2 gross area, or where more than 10 persons may be normally present shall have at least two exit access doors leading to the corridors in exit access, which can be readily opened. This shall not be subject to locking so long as any persons are inside and shall not depend on power operation. Exits in such cases shall be as remote from each other as practicable.

For warehouses, natural draft smoke venting shall utilize roof vents or vents in walls at or near the ceiling level; such vents shall be normally open, or, if closed, shall be designed for automatic opening in case of fire, by release of smoke sensitive devices.

6.8.1.3 The following special provisions shall apply to aircraft hangers:

a) Exits from aircraft hangers (storage or servicing areas) shall be provided at intervals of not more than 45 m on all exterior walls of aircraft hangers. There shall be a minimum of two exits serving each aircraft storage or servicing areas. Horizontal exits through interior fire walls shall be provided at intervals of not more than 30 m. 'Dwarf' or 'smash'

doors accommodating aircraft may be used to comply with these requirements. All doors designated as exits shall be kept unlocked in the direction of exit travel while the area is occupied.

b) Exits from mezzanine floors in aircraft storage or servicing areas shall be so arranged that the maximum travel to reach the nearest exits from any point on the mezzanine shall not exceed 22.5 m. Such exits shall lead directly to a properly enclosed stairwell discharging directly to the exterior or to a suitably cut-off area or to outside fire escape stairs.

6.8.1.4 The following special provisions shall apply to grain elevators:

a) There shall be at least one stair tower from basement to first floor and from the first floor to the top floor of workhouse which is enclosed in a dust tight non-combustible shaft.

b) Non-combustible doors of self-closing type shall be provided at each floor landing.

c) An exterior fire escape of the stair or basket ladder type shall be provided from the roof of the workshop to ground level or the roof of an adjoining annexe with access from all floors above the first.

d) An exterior fire escape of either the stair or basket ladder type shall be provided from the roof of each storage annexe to ground level.

6.8.1.5 For provisions relating to car parking facilities, *see* Annex H.

6.8.2 *Additional Precautions*

Requirements specified in **6.7.3** (a) shall apply to Group H occupancies also.

6.9 Hazardous Uses (Group J)

6.9.1 *Life Safety*

Requirements specified in **6.7.2.3** shall apply to Group J occupancies also.

6.9.2 *Additional Precautions*

The following requirements shall apply to all Group J occupancies, as applicable:

a) Hazardous buildings shall have vapour/flame/ember/spark detectors and explosion suppression systems depending on the type of fire hazard involved.

b) Each building where gas is employed for any purpose shall be provided with an approved outside gas shut-off valve conspicuously marked. The detailed requirements regarding safe use of gas shall be as specified in Part 9 'Plumbing Services, Section 4 Gas Supply' of the Code.

c) Each boiler room or room containing a heating plant shall be separated from the rest of the building by a separating wall.

d) In any room in which volatile flammable substances are used or stored, no device generating a spark, or glow flame capable of igniting flammable vapour shall be installed or permitted unless it is enclosed in a flameproof enclosure.

e) The use, handling, storage and sale of gasoline, fuel oil and other flammable liquids shall not be permitted in Group J occupancies unless such use, handling, storage and sale is in accordance with appropriate legislation in force.

f) All openings in exterior walls except wall vents shall be protected by a fire stop assembly as in **4** and they shall be fixed, automatic or self-closing. Wall vents having an area of not less than 100 cm^2 each shall be placed in the exterior walls near the floor line, not more than 1 800 mm apart horizontally. Each building shall be provided with a power driven fan exhaust system of ventilation which shall be arranged and operated so as to produce a complete change of air in each room every 3 min.

g) Each machine in dry-cleaning establishments which uses flammable liquid shall have an adequate steam line or any other suitable extinguishing agent directly connected to it, so arranged as to have the agent automatically released to the inside of each machine should an explosion occur in the machine.

h) Equipment or machinery which generates or emits combustible or explosive dust or fibres shall be provided with an adequate dust collecting and exhaust system.

ANNEX A

(*Clause* 3.1.8)

CALORIFIC VALUES OF COMMON MATERIALS

A-1 The calorific values of some common materials are given in Table 9 for guidance.

Table 9 Calorific Values of Common Materials
(*Clause* A-1)

Sl No.	Material	Calorific Value ($\times 10^3$ kJ/kg)[1]	Wood Equivalent (kg/kg)
(1)	(2)	(3)	(4)
i)	Solid Fuels		
	a) Anthracite	28.6	1.66
	b) Bituminous coal	30.8	1.75
	c) Charcoal	28.4	1.61
	d) Coke (average)	27.5	1.56
	e) Peat	20.9	1.19
	f) Sub-bituminous coal	22.0	1.25
	g) Woods (hard or softwood)	17.6	1.00
ii)	Hydrocarbons		
	a) Benzene	39.6	2.25
	b) Butane	47.1	2.68
	c) Ethane	49.1	2.79
	d) Ethylene	47.7	2.71
	e) Fuel oil	41.6	2.36
	f) Gas oil	42.9	2.44
	g) Hexane	44.9	2.55
	h) Methane (natural gas)	52.8	3.00
	j) Octane	45.3	2.58
	k) Paraffin	39.6-44.0	2.3-2.5
	m) Pentane	46.0	2.61
	n) Propane	47.3	2.69
	p) Propylene	46.2	2.63
iii)	Alcohols		
	a) Ethyl alcohol	28.4	1.61
	b) Methyl alcohol	21.1	1.20
	c) Propyl alcohol	31.9	1.81
iv)	Polymers		
	a) Casein	23.1	1.31
	b) Cellulose	16.5	0.94
	c) Cellulose acetate	17.8	1.01
	d) Polyethylene	48.4	2.75
	e) Polypropylene	48.4	2.75
	f) Polystyrene	41.8	2.38
	g) Polyvinylchloride	20.9	1.19
	h) Polymethyl methacrylate	24.6	1.40
	j) Polyurethane	35.2	2.00
	k) Polyamide (nylon)	22.0	1.25
	m) Polyester	22.0	1.25

Table 9 — (*Concluded*)

(1)	(2)	(3)	(4)
v)	Common Solids		
	a) Asphalt	38.3	2.13
	b) Bitumen	33.4	1.90
	c) Carbon	32.1	1.83
	d) Cotton (dry)	15.8	0.90
	e) Flax	14.3	0.81
	f) Furs and skins	18.7	1.06
	g) Hair (animal)	20.9	1.19
	h) Leather	17.6	1.00
	j) Ozokerite (wax)	43.3	2.46
	k) Paper (average)	15.4	0.88
	m) Paraffin wax	40.9	2.33
	n) Pitch	33.0	1.88
	p) Rubber	37.4	2.13
	q) Straw	13.2	0.75
	r) Tallows	37.6	2.14
	s) Tan bark	20.9	1.19
	t) Tar (bituminous)	35.2	2.00
	u) Wool (raw)	21.6	1.23
	w) Wool (scoured)	19.6	1.11
vi)	Foodstuffs		
	a) Barley	14.1	0.80
	b) Bran	11.0	0.63
	c) Bread	9.9	0.56
	d) Butter	29.5	1.68
	e) Cheese (cheddar)	18.1	1.03
	f) Corn meal	14.1	0.80
	g) Flour	14.1	0.80
	h) Margarine	29.5	1.68
	j) Oatmeal	15.8	0.90
	k) Rice	13.9	0.79
	m) Soya been flour	16.1	0.91
	n) Sugar	15.4	0.88
	p) Whole wheat	14.3	0.81
vii)	Miscellaneous		
	a) Acetone	29.7	1.69
	b) Acetaldehyde	25.1	1.43
	c) Formaldehyde	17.6	1.00
	d) Hydrogen	134.2	7.63
	e) Magnesium	24.0	1.36

[1] 1 kJ is approximately equal to 1 Btu so the figures in the tables are also equivalent to Btu/kg.

ANNEX B

(*Clause* 3.1.8)

BROAD CLASSIFICATION OF INDUSTRIAL OCCUPANCIES INTO DIFFERENT DEGREE OF HAZARD

Light Hazard	Moderate Hazard	High Hazard
Abrasive Manufacturing Premises	Aluminium Factories	SUB-CATEGORY (A)
Aerated Water Factories	*Atta* and Cereal Grinding	Aircraft Hangers
Agarbatti Manufacturing	Bakeries and Biscuit Factories	Aluminium/Magnesium Powder Plants
Areca Nut Slicing and/or Betel nut Factories	*Beedi* Factories	Bituminised Paper and/or Hessian Cloth/Tar Felt Manufacturing
Analytical and/or Quality Control Laboratories	Bobbin Factories	Cotton Waste Factories
Asbestos Steam Packing and Lagging Manufacturing	Bookbinders, Envelopes and Paper Bag Manufacturing	Celluloid Goods Manufacturing
Battery Charging/Battery Service Stations	Cable Manufacturing	Chemical Manufacturing using raw materials having flash points below 23°C
Battery Manufacturing	Camphor Boiling	Cigarette Filter Manufacturing
Breweries	Candle Works	Cinema Films and T.V. Production Studios
Brick Works	Carbon Paper/Typewriter Ribbon Manufacturing	Coal and/or Coke and/or Charcoal Ball and Briquettes Manufacturing
Canning Factories	Cardboard Box Manufacturing	Collieries
Cardamom Factories	Carpenters, Wood Wool and Furniture Manufacturing	Cotton Seed Cleaning or De-linting Factories.
Cement Factories and/or Asbestos or Concrete Products Manufacturing	Carpet and Durries Factories	Distilleries
Ceramic Factories and	Cashewnut Factories	Duplicating/Stencil Paper Manufacturing
Crockery and Stoneware Pipe Manufacturing	Chemical Manufacturing using raw materials having flash points above 23°C	Fire-works Manufacturing.
Clay Works	Cigar and Cigarette Factories	Foam Plastics Manufacturing and/or Converting Plants.
Clock and Watch Manufacturing	Coir Factories	Godowns and Warehouses (Storing Combustible/Flammable Goods).
Coffee Curing Roasting and Grinding Premises	Coir Carpets, Rugs, Tobacco, Hides and Skin Presses	Grass, Hay, Fodder and *Bhoosa* (chaff) Pressing Factories
Condensed Milk Factories, Milk Pasteurising Plant and Dairies	Cold Storage Premises	Industrial Gas Manufacturing (Other than Inert/Halogenated Hydrocarbon Gases)
Confectionery Manufacturing	Cork Products Manufacturing	Jute Mills and Jute Presses
Electric Generating Houses (Hydro electric)	Dry Cleaning, Dyeing and Laundries.	Linoleum Factories
Electric Lamps (Incandescent and Fluorescent) and TV Picture Tube Manufacturing	Electric Substations/Distribution Stations	LPG Bottling Plants (Mini)
Electro Plating Works	Electric Generating Stations (Other than Underground Power houses)	Man Made Fibres (Acrylic Fibres/yarn Manufacturing)
Engineering Workshops	Enamelware Factories	Match Factories
	Filter and Wax Paper Manufacturing	
	Flour Mills	

Light Hazard	Moderate Hazard	High Hazard
Fruits and Vegetables Dehydrating and Drying Factories	Garages	Mattress and Pillow Making
Fruit Products and Condiment Factories	Garment Makers	Metal or Tin Printers (where more than 50 Percent of floor area is occupied as Engineering Workshop; this may be taken as ordinary hazard risk)
Glass and Glass Fibre Manufacturing	Ghee Factories (Other than Vegetable)	Oil Mills
Godowns and Warehouses Storing Non-combustible Goods only	Godowns and Warehouses (Other than those Under Light and High Hazard A Categories)	Oil Extraction Plants
Green Houses	Grain and/or Seeds Disintegrating and/or Crushing Factories	Oil Terminals/Depots handling flammable Liquids having flash point of 23° C and Below
Gold Thread/Gilding Factories	Grease Manufacturing	Paints and Varnish Factories
Gum and/or Glue and Gelatine Manufacturing	Hosiery, Lace, Embroidery and Thread Factories	Paper and Cardboard Mills having raw material yards
Ice, Ice Candy and Ice-cream Manufacturing	Incandescent Gas Mantle Manufacturing	Piers, Wharves and Jetties – Handling Extra Hazardous Materials
Ink (Excluding Printing Ink) Factories	Industrial Gas Manufacturing (Inert/Halogenated hydrocarbon gases)	Printing Ink Manufacturing.
Mica Products Manufacturing	Man-made Yarn/Fibre Manufacturing (Other than Acrylic Fibres/Yarn Manufacturing)	Rosin Lamp-Black and Turpentine Factories
Pottery Works	Manure and Fertilizer Works (Blending, Mixing and granulating)	Saw Mills
Poultry Farms	Mineral Oil Blending and Processing	Sponge Iron Steel Plants (Gas Based)
Salt Crushing Factories and Refineries	Oil and Leather Cloth Factories	Surgical Cotton Manufacturing
Stables	Oil Terminals/Depots Other than those Categorised under High Hazard A	Tarpaulin and Canvas Proofing Factories
Sugar Candy Manufacturing	Open storage of Flammable Liquids in Drums, Cans, etc	Turpentine and Rosin Distilleries
Sugar Factories and Refineries	Oxygen Plants	Tyre Retreading and Resoling Factories
Tanneries/Leather Goods Manufacturers	Paper and Cardboard Mills. without Raw Material Yards	**SUB-CATEGORY (B)**
Umbrella Assembling Factories	Piers, Wharves, Jetties and Dockyards other than those Categorized Under High Hazard A	Ammonia and Urea Synthesis Plants
Vermicelli Factories	Plastic Goods Manufacturing	CNG Compressing and Bottling Plants
Water Treatment/Filtration Plants and Water Pump Houses	Plywood/Wood Veneering Factories	Coal Based Methane Plants
Zinc/Copper Factories	Printing Press Premises	Explosive Factories
		NOTE — In case of complexes having separate plants having varying degrees of hazard, authority having jurisdiction shall be consulted to decide on level of protection to be provided.

Light Hazard	Moderate Hazard	High Hazard
	Pulverising and Crushing Mills	
	Rice Mills	
	Rope Works	
	Rubber Goods Manufacturing	
	Rubber Tyres and Tubes Manufacturing	
	Shellac Factories	
	Silk Filiatures	
	Soaps and Glycerine Factories	
	Spray Painting	
	Starch Factories	
	Tea Factories	
	Textile Mills	
	Tobacco (Chewing) and Pan-Masala Making	
	Tobacco Grinding and Crushing	
	Tobacco Redrying Factories	
	Woollen Mills	

NOTE — Any occupancy that is not covered in this annex shall be classified in the most appropriate class which resembles the proposed occupancy.

ANNEX C

(*Clauses* 3.3.2 *and* 3.3.3)

AVAILABLE DATA REGARDING FIRE RESISTANCE RATING OF VARIOUS BUILDING COMPONENTS

Table 10 Masonry Walls: Solid (Required to Resist Fire from One Side at a Time)

(*Clause* C-1)

Sl No.	Nature of Construction and Materials	Minimum Thickness (mm), Excluding any Finish for a Fire Resistance (min) of									
		Load Bearing					Non-load Bearing				
		60	90	120	180	240	60	90	120	180	240
(1)	(2)	(3)	(4)	(5)	(6)	(7)	(8)	(9)	(10)	(11)	(12)
i)	Reinforced cement concrete[1)]	120 (25)[2)]	140 (25)[2)]	160 (25)[2)]	200 (25)[2)]	240 (25)[2)]	—	—	—	—	—
ii)	Unreinforced cement concrete	150	175	—	—	—	—	—	—	—	—
iii)	No-fines concrete with:										
	a) 13 mm cement/sand or gypsum/sand	—	—	—	—	—	150	150	150	150	150
	b) 13 mm light weight aggregate gypsum plaster	—	—	—	—	—	150	150	150	150	150
iv)	Bricks of clay:										
	a) Without finish	90	100	100	170	170	75	90	100	170	170
	b) With 13 mm lightweight aggregate gypsum plaster	90	90	90	100	100	75	90	90	90	100
v)	Bricks of sand lime:										
	a) Without finish	90	100	100	190	190	75	90	100	170	170
	b) With 13 mm lightweight aggregate gypsum plaster	90	90	90	100	100	75	90	90	90	100
vi)	Blocks of concrete:										
	a) Without finish	90	100	100	—	—	75	90	100	140	150
	b) With 13 mm lightweight aggregate gypsum plaster	90	90	90	100	100	75	75	75	90	100
	c) With 13 mm cement/sand or gypsum/sand	—	—	—	—	—	75	90	90	100	140
vii)	Blocks of lightweight concrete:										
	a) Without finish	90	100	100	140	150	75	75	75	125	140
	b) With 13 mm lightweight aggregate gypsum plaster	90	90	90	100	100	50	63	75	75	75
	c) With 13 mm cement/sand or gypsum/sand	—	—	—	—	—	75	75	75	90	100
viii)	Blocks of aerated concrete:										
	a) Without finish	90	100	100	140	180	50	63	63	75	100
	b) With 13 mm lightweight aggregate gypsum plaster	90	90	100	100	150	—	—	—	—	—

[1)] Walls containing at least 1 percent of vertical reinforcement.

[2)] Minimum thickness of actual cover to reinforcement.

Table 11 Masonry Walls: Hollow (Required to Resist Fire from One Side at a Time)

(*Clause* C-1)

Sl No.	Nature of Construction and Materials	Minimum Thickness (mm), Excluding any Finish for a Fire Resistance (Min) of										
		Load Bearing					Non-load Bearing					
		60	90	120	180	240	30	60	90	120	180	240
(1)	(2)	(3)	(4)	(5)	(6)	(7)	(8)	(9)	(10)	(11)	(12)	(13)
i)	Bricks of clay:											
	a) Without finish	170	170	170	200	200	75	75	90	100	170	170
	b) With 13 mm lightweight aggregate gypsum plaster	100	100	170	170	170	75	75	90	90	90	100
ii)	Blocks of concrete:											
	a) Without finish	—	—	—	—	—	90	125	125	140	140	150
	b) With 13 mm cement/sand or gypsum/sand	—	—	—	—	—	90	125	125	140	140	140
	c) With 13 mm lightweight aggregate gypsum plaster	190	200	200	—	—	75	90	90	100	125	125
iii)	Blocks of lightweight concrete:											
	a) Without finish	100	100	100	—	—	75	90	90	100	140	150
	b) With 13 mm cement/sand or gypsum/sand	—	—	—	—	—	75	75	75	100	140	140
	c) With 13 mm lightweight aggregate gypsum plaster	—	—	—	—	—	63	63	63	75	90	100

Table 12 Framed Construction, Load Bearing (Required to Resist Fire from One Side at a Time)

(*Clause* C-1)

Sl No.	Nature of Construction and Materials/Timber Studs at Centres not Exceeding 600 mm, Faced on Each Side with	Minimum Thickness (mm) of Protection for a Fire Resistance of 60 min
(1)	(2)	(3)
i)	Plasterboard layers with joints staggered, joints in outer layer taped and filled – Total thickness for each face	25
ii)	One layer of 12.7 mm plasterboard with a finish of lightweight aggregate gypsum plaster	13
iii)	Metal lath and plaster, thickness of plaster:	
	a) Sanded gypsum plaster (metal lathing grade)	22
	b) Lightweight aggregate gypsum plaster	13

Table 13 Framed Construction, Non-Load Bearing (Required to Resist Fire from One Side at a Time)

(*Clause* C-1)

Sl No.	Nature of Construction and Materials/Steel or Timber Frame at Centres not Exceeding 600 mm, Facings on Both Sides of	Stud Construction	Minimum Thickness (mm) of Protection for a Fire Resistance of			
			30 min	60 min	90 min	120 min
(1)	(2)	(3)	(4)	(5)	(6)	(7)
i)	Dry lining with materials fixed direct to studs, without plaster finish:					
	a) One layer of plasterboard with taped and filled joints	Timber or steel	12.7	—	—	—
	b) Two layers of plasterboard with joints staggered, joints in outer layer taped and filled – Total thickness for each face	Timber or steel	19	25	—	—
	c) One layer of asbestos insulating board with transverse joints backed by fillers of asbestos insulating board not less than 9 mm thick, or by timber	Timber or steel	9	12	—	—
	d) One layer of wood wool slabs	Timber	25	—	—	—
	e) One layer of chipboard or of plywood	Timber or steel	18	—	—	—
ii)	Lining with materials fixed direct to suds, with plaster finish:					
	a) Plasterboard of thickness:					
	1) With not less than 5 mm gypsum plaster finish	Timber or steel	9.5	—	—	—
	2) With not less than 13 mm gypsum plaster finish	Timber or steel	—	12.7	—	—
iii)	Wet finish:					
	a) Metal lath and plaster, thickness of plaster:					
	1) Sanded gypsum plaster	Timber or steel	13	—	—	—
	2) Lightweight aggregate gypsum plaster	Timber	—	13	19	25
		Steel	—	13	—	—

Table 14 Framed External Walls Load Bearing (Required to Resist Fire from One Side at a Time)

(*Clause* C-1)

Sl No.	Nature of Construction and Materials	Minimum Thickness (mm) of Protection for a Fire Resistance of 60 min
(1)	(2)	(3)
i)	Timber studs at centres not exceeding 600 mm with internal linings of: Plasterboard layers with joints in outer layer taped and filled, total thickness of plasterboard	31

Table 15 Framed External Walls Non-Load Bearing
[Required to Resist Fire from Inside the Building (A)]
(*Clause* C-1)

Sl No.	Nature of Construction and Materials	Minimum Thickness (mm) of Protection for a Fire Resistance of					
		30 min	60 min	90 min	120 min	180 min	240 min
(1)	(2)	(3)	(4)	(5)	(6)	(7)	(8)
i)	Steel frame with an external cladding of non-combustible sheets (excluding sheet steel), with a steel supporting framework and internal lining of:						
	a) Metal lath and plaster, thickness of plaster:						
	1) Sanded gypsum plaster (metal lathing grade)	13	13	—	—	—	—
	2) Lightweight aggregate gypsum plaster	10	13	15	15	15	19
	b) Two layer of plasterboard with joints staggered joints in outer layer taped and filled – Total thickness	21	32	—	—	—	—
	c) Plasterboard of thickness:						
	1) With not less than 5 mm gypsum plaster finish	12.7	—	—	—	—	—
	2) With not less than 13 mm gypsum plaster finish	9.5	—	—	—	—	—
	3) With not less than 10 mm lightweight aggregate gypsum plaster	9.5	—	—	—	—	—
	d) One layer of asbestos insulating board with transverse joints backed by fillers of asbestos insulating board not less than 9 mm thick, or by timber	9	9	12	12	12	12
	e) One layer of wood/wool slabs without finish	—	50	—	—	—	—
	f) One layer of compressed straw building slabs:						
	1) Without finish	50	—	—	—	—	—
	2) With not less than 5 mm gypsum plaster finish	—	50	—	—	—	—
	g) Aerated concrete blocks	50	50	63	63	75	100
	h) Bricks of clay:						
	1) Without finish	75	75	90	90	100	100
	2) With not less than 13 mm lightweight aggregate gypsum plaster	—	—	75	75	90	90

Table 16 Framed External Walls Non-Load Bearing
[Required to Resist Fire from Inside the Building (B)]
(*Clause* C-1)

Sl No.	Nature of Construction and Materials	Minimum Thickness (mm) of Protection to provide Sufficient Insulation to Achieve a Modified Fire Resistance of Up to 240 min
(1)	(2)	(3)
i)	Steel frame with an external cladding of sheet steel fully lapped, steel bolted and fixed to steel sheeting rails, with timber or steel supporting framework and internal lining of:	
	a) Metal lath and plaster, thickness of plaster:	
	1) Sanded gypsum plaster (metal lathing grade)	13
	2) Lightweight aggregate gypsum plaster	10
	b) One layer of plasterboard with joints taped and filled	12.7
	c) Plasterboard of thickness with not less than 5 mm gypsum plaster finish	9.5
	d) One layer of asbestos insulating board with transverse joints backed by fillers of asbestos insulating board not less than 9 mm thick, or by timber	9
	e) One layer of wood/wool slabs	25
	f) One layer of compressed straw building slabs	50
	g) One layer of chipboard or of plywood	18
	h) Aerated concrete blocks	50
	j) Bricks of clay	75
	k) Any internal decorative lining with a cavity fill independently supported and retained in position of mineral fibre insulating material (excluding glass) at a density of 48 kg/m^3	50

Table 17 Framed Walls Non-Load Bearing
[Required to Resist Fire from Inside the Building (C)]
(*Clause* C-1)

Sl No.	Nature of Construction and Materials	Minimum Thickness (mm) of Protection for a Fire Resistance of 90 min
(1)	(2)	(3)
i)	Timber frame with external cladding of weather boarding or external plywood, 9.5 mm with an internal lining of :	
	a) Plasterboard not less than 9.5 mm thick, finished with:	
	1) Gypsum plaster	13
	2) Lightweight aggregate gypsum plaster	10
	b) Plasterboard not less than 12.7 mm thick, finished with:	
	1) Gypsum plaster	10
	2) Lightweight aggregate gypsum plaster	10
	c) One layer of asbestos insulating board with transverse joints backed by fillers of asbestos insulating board not less than 9 mm thick,	9
	or by timber	12

Table 18 Reinforced Concrete Columns
(*Clause* C-1)

Sl No.	Nature of Construction and Materials		Minimum Dimensions (mm) Excluding any Finish, for a Fire Resistance of					
			30 min	60 min	90 min	120 min	180 min	240 min
(1)	(2)		(3)	(4)	(5)	(6)	(7)	(8)
i)	Fully exposed	a) Width	150	200	250	300	400	450
		b) Cover	40	40	40	40	40	40
ii)	50 percent exposed	a) Width	125	160	200	200	300	350
		b) Cover	40	40	40	40	40	40
iii)	One face exposed	a) Thickness	100	120	140	160	200	240
		b) Cover	40	40	40	40	40	40

Table 19 Concrete Beams
(*Clause* C-1)

Sl No.	Nature of Construction and Materials		Minimum Dimensions (mm) Excluding any Finish, for a Fire Resistance of					
			30 min	60 min	90 min	120 min	180 min	240 min
(1)	(2)		(3)	(4)	(5)	(6)	(7)	(8)
i)	Reinforced concrete (simply supported)	a) Width	200	200	200	200	240	280
		b) Cover	20	20	20	40	60[1)]	70[1)]
ii)	Reinforced concrete (continuous)	a) Width	200	200	200	200	240	280
		b) Cover	20	20	20	30	40	50[1)]
iii)	Prestressed concrete (simply supported	a) Width	100	120	150	200	240	280
		b) Cover	25	40	55[1)]	70[1)]	80[1)]	90[1)]
iv)	Prestressed concrete (continuous)	a) Width	80	100	120	150	200	240
		b) Cover	20	30	40	55[1)]	70[1)]	80[1)]

[1)] Require attention to the additional measures necessary to reduce the risk of spalling.

Table 20 Concrete Floors
(*Clause* C-1)

Sl No.	Nature of Construction and Materials		Minimum Dimensions (mm) Excluding any Finish, for a Fire Resistance of					
			30 min	60 min	90 min	120 min	180 min	240 min
(1)	(2)		(3)	(4)	(5)	(6)	(7)	(8)
i)	Reinforced concrete (simply supported)	a) Thickness	75	95	110	125	150	170
		b) Cover	20	20	25	35	45[1)]	55[1)]
ii)	Reinforced concrete (continuous)	a) Thickness	75	95	110	125	150	170
		b) Cover	20	20	20	25	35	45[1)]

[1)] Require attention to the additional measures necessary to reduce the risk of spalling.

Table 21 Concrete Floors: Ribbed Open Soffit
(*Clause* C-1)

Sl No.	Nature of Construction and Materials		Minimum Dimensions (mm) Excluding any Finish, for a Fire Resistance of					
			30 min	60 min	90 min	120 min	180 min	240 min
(1)	(2)		(3)	(4)	(5)	(6)	(7)	(8)
i)	Reinforced concrete (simply supported)	a) Thickness of floor	75	95	110	125	150	170
		b) Rib width	125	125	125	125	150	175
		c) Cover	20	20	35	45[1)]	55[1)]	65[1)]
ii)	Reinforced concrete (continuous)	a) Thickness of floor	75	95	110	125	150	170
		b) Rib width	125	125	125	125	150	175
		c) Cover	20	20	20	35	45[1)]	55[1)]

[1)] Require attention to the additional measures necessary to reduce the risk of spalling.

Table 22 Encased Steel Columns, 203 mm × 203 mm
(*Clause* C-1)

Sl No.	Nature of Construction and Materials	Minimum Dimensions (mm) Excluding any Finish, for a Fire Resistance of				
		60 min	90 min	120 min	180 min	240 min
(1)	(2)	(3)	(4)	(5)	(6)	(7)
i)	Hollow protection (without an air cavity over the flanges):					
	a) Metal lathing with trowelled lightweight aggregate gypsum plaster[1)]	13	15	20	32	—
	b) Plasterboard with 1.6 mm wire binding at 100 mm pitch, finished with lightweight aggregate gypsum plaster not less than the thickness specified:					
	1) 9.5 mm plaster board	10	15	—	—	—
	2) 19 mm plaster board	10	13	20	—	—
	c) Asbestos insulating boards, thickness of board:					
	1) Single thickness of board, with 6 mm cover fillets at transverse joints	—	19	25	—	—
	2) Two layers, of total thickness	—	—	—	38	50
	d) Solid bricks of clay, composition or sand lime, reinforced in every horizontal joint, unplastered	50	50	50	75	100
	e) Aerated concrete blocks	60	60	60	—	—
	f) Solid blocks of lightweight concrete	50	50	50	60	75
	Hollow protection (with an air cavity over the flanges)					

Table 22 — (*Concluded*)

(1)	(2)	(3)	(4)	(5)	(6)	(7)
ii)	Asbestos insulating board screwed to 25 mm asbestos battens	12	19	—	—	—
iii)	Solid protections:					
	a) Concrete, not leaner than 1:2:4 mix (unplastered):					
	1) Concrete not assumed to be load bearing, reinforced[2)]	25	25	25	50	75
	2) Concrete assumed to be load bearing	50	50	50	75	75
	b) Lightweight concrete, not leaner than 1:2:4 mix (unplastered): concrete not assumed to be load bearing, reinforced[2)]	25	25	25	40	60

[1)] So fixed or designed, as to allow full penetration for mechanical bond.

[2)] Reinforcement shall consist of steel binding wire not less than 2.3 mm in thickness, or a steel mesh weighing not less than 0.5 kg/m^2. In concrete protection, the spacing of that reinforcement shall not exceed 200 mm in any direction.

Table 23 Encased Steel Beams, 406 mm × 176 mm (Protection Applied on Three Sides)

(*Clause* C-1)

Sl No.	Nature of Construction and Materials	Minimum Thickness (mm) of Protection for a Fire Resistance of					
		30 min	60 min	90 min	120 min	180 min	240 min
(1)	(2)	(3)	(4)	(5)	(6)	(7)	(8)
i)	Hollow protection (without an air cavity beneath the lower flange):						
	a) Metal lathing with trowelled lightweight aggregate gypsum plaster[1)]	13	13	15	20	25	—
	b) Plasterboard with 1.6 mm wire binding[2)] at 100 mm pitch, finished with lightweight aggregate gypsum plaster not less than the thickness specified:						
	1) 9.5 mm plaster board	10	10	15	—	—	—
	2) 19 mm plaster board	10	10	13	20	—	—
	c) Asbestos insulating boards, thickness of board :						
	1) Single thickness of board, with 6 mm cover fillets at transverse joints	—	—	19	25	—	—
	2) Two layers, of total thickness	—	—	—	—	38	50
ii)	Hollow protection (with an air cavity below the lower flange):						
	a) Asbestos insulating board screwed to 25 mm asbestos battens	9	12	—	—	—	—
iii)	Solid protection :						
	a) Concrete, not leaner than 1:2:4 mix (unplastered):						
	1) Concrete not assumed to be load bearing, reinforced[3)]	25	25	25	25	50	75
	2) Concrete assumed to be load bearing	50	50	50	50	75	75
	b) Lightweight concrete[4)], not leaner than 1:2:4 (mix) unplastered	25	25	25	25	40	60

[1)] So fixed or designed, as to allow full penetration for mechanical bond.

[2)] Where wire binding cannot be used, expert advice should be sought regarding alternative methods of support to enable the lower edges of the plasterboard to be fixed together and to the lower flange, and for the top edge of the plasterboard to be held in position.

[3)] Reinforcement shall consist of steel binding wire not less than 2.3 mm in thickness or a steel mesh weighing not less than 0.5 kg/m^2. In concrete protection, the spacing of that reinforcement shall not exceed 200 mm in any direction.

[4)] Concrete not assumed to be load bearing, reinforced.

Table 24 Timber Floors – Tongued and Grooved Boarding, or Sheets of Tongued and Grooved Plywood or Wood Chipboard, of not Less than 21 mm Finished Thickness

(*Clause* C-1)

Sl No.	Nature of Construction and Materials	Minimum Thickness (mm) of Protection, for a Fire Resistance of		
		30 min	60 min	120 min
(1)	(2)	(3)	(4)	(5)
i)	37 mm (minimum) timber joists with a ceiling of:			
	a) Timber lathing and plaster, plaster of thickness	15	—	—
	b) Metal lathing and plaster, thickness of plaster:			
	1) Sanded gypsum plaster (metal lathing grade)	15	—	—
	2) Lightweight aggregate gypsum plaster	13	13	25
	c) One layer of plasterboard with taped and filled joints	12.7	—	—
	d) Two layers of plasterboard with joints staggered, joints in outer layer taped and filled total thickness	19	31	—
	e) One layer of plasterboard not less than 9.5 mm thick, finished with:			
	1) Gypsum plaster	5	—	—
	2) Sanded gypsum plaster	13	—	—
	3) Lightweight aggregate gypsum plaster	13	—	—
	f) One layer of plasterboard not less than 12.7 mm thick, finished with:			
	1) Gypsum plaster	5	—	—
	2) Lightweight aggregate gypsum plaster	10	—	—
	g) One layer of asbestos insulating board with any transverse joints backed by fillets of asbestos insulating board not less than 9 mm thick, or by timber	9	12	—

Table 25 Timber Floors – Tongued and Grooved Boarding, or Sheets of Tongued and Grooved Plywood or Wood Chipboard, of not Less than 15 mm Finished Thickness

(*Clause* C-1)

Sl No.	Nature of Construction and Materials	Minimum Thickness (mm) of Protection for a Fire Resistance of		
		30 min	60 min	120 min
(1)	(2)	(3)	(4)	(5)
i)	37 mm (minimum) timber joists with a ceiling of:			
	a) Timber lathing and plaster, plaster of thickness	15	—	—
	b) Metal lathing and plaster, thickness of plaster for:			
	1) Sanded gypsum plaster (metal lathing grade)	15	—	—
	2) Lightweight aggregate gypsum plaster	13	13	25
	c) One layer of plasterboard with taped and filled joints	12.7	—	—
	d) Two layers of plasterboard with joints staggered, joints in outer layer taped and filled total thickness	22	31	—
	e) One layer of plasterboard not less than 9.5 mm thick, finish with:			
	1) Gypsum plaster	5	—	—
	2) Sanded gypsum plaster	15	—	—
	3) Lightweight aggregate gypsum plaster	13	—	—
	f) One layer of plasterboard not less than 12.7 mm thick, finished with:			
	1) Gypsum plaster	5	—	—
	2) Lightweight aggregate gypsum plaster	10	—	—
	g) One layer of asbestos insulating board, with any transverse joints backed by fillets of asbestos insulating board not less than 9 mm thick, or by timber	9	12[1)]	—

[1)] Finished on top with 25 mm minimum thick glass fibre or mineral wool laid between joints.

Table 26 Timber Floors – Any Structurally Suitable Flooring of Timber or Lignocelluloses Boards

(*Clause* C-1)

Sl No.	Nature of Construction and Materials	Minimum Thickness (mm) of Protection, for a Fire Resistance of	
		30 min	60 min
(1)	(2)	(3)	(4)
i)	37 mm (minimum) timber joists with a ceiling of:		
	a) Timber lathing and plaster, plaster of thickness	15	—
	b) Metal lathing and plaster, thickness of plaster for :		
	1) Sanded gypsum plaster (metal lathing grade)	15	—
	2) Lightweight aggregate gypsum plaster	13	19
	c) One layer of plasterboard with joints taped and filled and backed by timber	12.7	—
	d) Two layers of plasterboard with joints staggered, joints in outer layer taped and filled total thickness	25	—
	e) Two layers of plasterboard, each not less than 9.5 mm thick, joints between boards staggered and outer layer finished with gypsum plaster	5	—
	f) One layer of plasterboard not less than 9.5 mm thick, finish with :		
	1) Sanded gypsum plaster	13	—
	2) Lightweight aggregate gypsum plaster	15	—
	g) One layer of plasterboard not less than 12.7 mm thick, finished with :		
	1) Sanded gypsum plaster	15	—
	2) Lightweight aggregate gypsum plaster	13	—
	h) One layer of asbestos insulating board with any transverse joints backed by fillets of asbestos insulating board not less than 9 mm thick, or by timber	12	—

ANNEX D

(*Clause* 4.11)

GUIDELINES FOR FIRE DRILL AND EVACUATION PROCEDURES FOR HIGH RISE BUILDINGS

D-1 INTRODUCTION

In case of fire in a high rise building, safe evacuation of its occupants may present serious problems unless a plan for orderly and systematic evacuation is prepared in advance and all occupants are well drilled in the operation of such plan. These guidelines are intended to assist them in this task.

D-2 ALARMS

Any person discovering fire, heat or smoke shall immediately report such condition to the fire brigade, unless he has personal knowledge that such a report has been made. No person shall make, issue, post or maintain any regulation or order, written or verbal, that would require any person to take any unnecessary delaying action prior to reporting such condition to the fire brigade.

D-3 DRILLS

D-3.1 Fire drills shall be conducted, in accordance with the Fire Safety Plan, at least once every three months for buildings during the first two years. Thereafter, fire drills shall be conducted at least once every six months.

D-3.2 All occupants of the building shall participate in the fire drill. However, occupants of the building, other than building service employees, are not required to leave the floor or use the exits during the drill.

D-3.3 A written record of such drills shall be kept on the premises for a three years period and shall be readily available for fire brigade inspection.

D-4 SIGNS AND PLANS

D-4.1 Signs at Lift Landings

A sign shall be posted and maintained in a conspicuous place on every floor at or near the lift landing in accordance with the requirements, indicating that in case of fire, occupants shall use the stairs unless instructed otherwise. The sign shall contain a diagram showing the location of the stairways except that such diagram may be omitted, provided signs containing such diagram are posted in conspicuous places on the respective floor.

A sign shall read 'IN CASE OF FIRE, USE STAIRS UNLESS INSTRUCTED OTHERWISE'. The lettering shall be at least 12.5 mm block letters in red and white background. Such lettering shall be properly spaced to provide good legibility. The sign shall be at least 250 mm × 300 mm, where the diagram is also incorporated in it and 62.5 mm × 250 mm where the diagram is omitted. In the latter case, the diagram sign shall be at least 200 mm × 300 mm. The sign shall be located directly above the call-button and squarely attached to the wall or partition. The top of the sign shall not be above 2 m from the floor level.

D-4.2 Floor Numbering Signs

A sign shall be posted and maintained within each stair enclosure on every floor, indicating the number of the floor, in accordance with the requirements given below.

The numerals shall be of bold type and at least 75 mm high. The numerals and background shall be in contrasting colours. The sign shall be securely attached to the stair side of the door.

D-4.3 Stair and Lifts Identification Signs

Each stairway and each lift bank shall be identified by an alphabetical letter. A sign indicating the letter of identification shall be posted and maintained at each lift landing and on the side of the stairway door from which egress is to be made, in accordance with the requirements given in **4.4.2.4.3.2**(h)(9).

D-4.4 Stair Re-entry Signs

A sign shall be posted and maintained on each floor within each stairway and on the occupancy side of the stairway where required, indicating whether re-entry is provided into the building and the floor where such re-entry is provided, in accordance with the requirements given below.

The lettering and numerals of the signs shall be at least 12.5 mm high of bold type. The lettering and background shall be of contrasting colours and the signs shall be securely attached approximately 1.5 m above the floor level.

D-5 FIRE SAFETY PLAN

D-5.1 A format for the Fire Safety Plan shall be as given in **D-9.10.**

D-5.2 The applicable parts of the approved Fire Safety Plan shall be distributed to all tenants of the building by the building management when the Fire Safety Plan has been approved by the Fire Authority.

D-5.3 The applicable parts of the approved Fire Safety Plan shall then be distributed by the tenants to all their employees and by the building management to all their building employees.

D-5.4 In the event there are changes from conditions existing at the time the Fire Safety Plan for the building was approved, and the changes are such so as to require amending the Fire Safety Plan, within 30 days after such changes, an amended Fire Safety Plan shall be submitted to the fire brigade for approval.

D-6 FIRE COMMAND CENTRE

A Fire Command Centre shall be established in the building (*see* **3.4.12**).

D-7 COMMUNICATIONS AND FIRE ALARM

A means of communication and fire alarm for use during fire emergencies shall be provided and maintained by the owner or person in charge of the building.

D-8 FIRE SAFETY PLAN FORMAT

D-8.1 Building Address

Street and Pin Code Number.....

Telephone Number.....

D-8.2 Purpose and Objective

D-8.2.1 *Purpose*

To establish method of systematic, safe and orderly evacuation of an area or building by and of its occupants in case of fire or other emergency, in the least possible time, to a safe area by the nearest safe means of egress; also the use of such available fire appliances (including sounding of alarms) as may have been provided for controlling or extinguishing fire and safeguarding of human life.

D-8.2.2 *Objective*

To provide proper education as a part of continuing employee indoctrination and through a continuing written programme for all occupants, to ensure prompt reporting of fire, the response of fire alarms as designated, and the immediate initiation of fire safety procedures to safeguard life and contain fire until the arrival of the fire brigade.

D-8.3 Fire Safety Director

a) Name
b) Regularly assigned employment — Title
c) Regularly assigned location
d) How is he notified when at regular location?
e) How is he notified when not at regular location?
f) Normal working hours
g) Duties of Fire Safety Director (*see* **D-9.1**)

D-8.4 Deputy Fire Safety Director

a) Name
b) Regularly assigned employment — Title
c) Regularly assigned location
d) How is he notified when at regular location?
e) How is he notified when not at regular location?
f) Normal working hours
g) Duties of Deputy Fire Safety Director (*see* **D-9.2**)

D-8.5 Fire Wardens and Deputy Fire Wardens

a) Are their names on organization charts for each floor and/or tenancy?
b) Submit typical completed organization chart for Fire Drill and Evacuation Assignment.
c) Duties of Fire Wardens and Deputy Fire Wardens (*see* **D-9.3**).

D-8.6 Building Evacuation Supervisor

a) Name
b) Regularly assigned employment — Title
c) Regularly assigned location
d) How is he notified when at regular location ?
e) How is he notified when not at regular location?
f) Normal working hours
g) Duties of Building Evacuation Supervisor (*see* **D-9.4**).

D-8.7 Fire Party

a) Submit a completed organization chart for Fire Parties naming person in charge, and his title in the building.
b) Indicate standards of selection from building employees based on background and availability.
c) How are they notified?
d) How are they notified when they are not at their regular locations?
e) Means of responding
f) Duties of each member of Fire Party (*see* **D-9.5**).

D-8.8 Occupants Instructions

Distribution of instructions of all tenants, tenants' employees and building employees (*see* **D-9.6**).

D-8.9 Evacuation Drills

a) Frequency of drills
b) How conducted?
c) Participation? Who participated? How?
d) Controls and supervision
e) Recording of details of drills

D-8.10 Fire Command Station

a) Location
b) Requirements:
   1) Adequate illumination
   2) Adequate communication to mechanical equipment room and lifts control room on each floor
   3) Copy of Fire Safety Plan
   4) Copy of Building Information Form
   5) Representative floor plans showing location of signs, floor remote station, communications, etc

D-8.11 Signs

a) Signs at lifts landings, Floor diagrams
b) Floor numbering
c) Stairway identification
d) Lifts identification
e) Stair re-entry

D-8.12 Fire Prevention and Fire Protection Programme

See **D-9.7.**

D-8.13 Building Information Form

see **D-9.8**

D-8.14 Representative Floor Plan

See **D-9.9**

D-8.15 Fire Safety Plan Prepared by

See **D-9.10**

a) Date when prepared, and
b) Date when revised

D-9 DUTIES

D-9.1 Fire Safety Director's Duties

D-9.1.1 Be familiar with the written Fire Safety Plan providing for fire drill and evacuation procedure in accordance with orders on the subject.

D-9.1.2 Select qualified building service employees for a Fire Party and organize, train and supervise such fire brigade.

D-9.1.3 Be responsible for the availability and state of readiness of the Fire Party.

D-9.1.4 Conduct fire and evacuation drills.

D-9.1.5 Be responsible for the designation and training of a Fire Warden for each floor, and sufficient Deputy Fire Wardens for each tenancy in accordance with orders on the subject.

D-9.1.6 Be responsible for a daily check for the availability of the Fire Wardens, and see that up-to-date organization charts are posted.

NOTE — If the number of Fire Wardens and Deputy Fire Wardens in the building is such that it is impractical to individually contact each one daily, a suggested method to satisfy the requirements is to make provisions for the Fire Warden, or a Deputy Fire Warden in the absence of the Fire Warden, to notify the Fire Safety Director when the Fire Warden or required number of Deputy Fire Wardens are not available. In order to determine the compliance by the Fire Warden and Deputy Fire Wardens, when this method is used, the Fire Safety Director shall make a spot check of several different floors each day.

D-9.1.7 Notify the owner or some other person having charge of the building when any designated individual is neglecting his responsibilities contained in Fire Safety Plan. The owner or the other person in-charge of the building shall bring the matter to the attention of the firm employing the individual. If the firm fails to correct the condition, the fire department shall be notified by the owner/person in charge of the building.

D-9.1.8 In the event of fire, shall report to the fire command centre to supervise, provide for and coordinate with respect to the following:

a) Ensuring that the fire department has been notified of any fire or fire alarm.
b) Manning of the fire command station.
c) Direction of evacuating procedures as provided in the Fire Safety Plan.
d) Report on conditions on fire floor for information of fire department on their arrival.
e) Advising the fire department officer in-charge in the operation of the Fire Command Centre.

D-9.1.9 Be responsible for the training and activities of the Building Evacuation Supervisor.

D-9.2 Deputy Fire Safety Director's Duties

a) He is the subordinate to the Fire Safety Director.
b) He shall perform duties of Fire Safety Director in his absence.

D-9.3 Fire Warden's and Deputy Fire Warden's Duties

The tenant or tenants of each floor shall, upon request of the owner or person in charge of buildings, make responsible and dependable employees available for

designation by the Fire Safety Director as Fire Warden and Deputy Fire Wardens.

D-9.3.1 Each floor of a building shall be under the direction of a designated Fire Warden for the evacuation of occupants in the event of fire. He shall be assisted in his duties by the Deputy Fire Wardens. A Deputy Fire Warden shall be provided for each tenancy. When the floor area of a tenancy exceeds 700 m^2 of occupiable space, a Deputy Fire Warden shall be assigned for each 700 m^2 or part thereof.

D-9.3.2 Each Fire Warden and Deputy Fire Warden shall be familiar with the fire safety plan, the location of exits and the location and operation of any available fire alarm system.

D-9.3.3 In the event of fire, or fire alarm the Fire Warden shall ascertain the location of the fire, and direct evacuation of the floor in accordance with directions received and the following guidelines:

a) The most critical areas for immediate evacuation are the fire floor and floors immediately above. Evacuation from the other floors shall be instituted when instructions from the fire Command Centre or conditions indicate such action. Evacuation shall be *via* uncontaminated stairs. The Fire Warden shall try to avoid stairs being used by the Fire department. If this is not possible, he shall try to attract the attention of the Fire department personnel before such personnel open the door to the fire floor.

b) Evacuation to two or more levels below the fire floor is generally adequate. He shall keep the fire command station informed regarding his location.

c) Fire Wardens and their deputies shall see that all occupants are notified of the fire, and that they proceed immediately to execute the Fire Safety Plan.

d) The Fire Warden on the fire floor shall, as soon as practicable, notify the Fire Command Centre of the particulars.

e) Fire Wardens on floors above the fire shall, after executing the Fire Safety Plan, notify the Fire command station of the means being used for evacuation and any other particulars.

f) In the event that stairways serving fire floor and/or floors above are unusable due to contamination or cut-off by fire and/or smoke or that several floors above fire involve large numbers of occupants who must be evacuated, consideration may be given to using lifts in accordance with the following:

   1) If the lifts servicing his floor also service the fire floor, they shall not be used. However, lifts may be used if there is more than one bank of lifts, and he is informed from the Fire Command Centre that one bank is unaffected by the fire.

   2) If lifts do not service the fire floor and their shafts have no openings on the fire floor, they may be used, unless directed otherwise.

   3) Lifts manned by trained building personnel or firemen may also be used.

   4) In the absence of a serviceable lift, the Fire Warden shall select the safest stairway to use for evacuation on the basis of the location of the fire and any information received from the Fire Command Centre. The Fire Warden shall check the environment in the stairs prior to entry for evacuation. If it is affected by smoke, alternative stair shall be selected, and the Fire Command Centre notified.

   5) The Fire Warden shall keep the Fire Command Centre informed of the means being employed for evacuation by the occupants of his floor.

g) Ensure that an alarm has been transmitted.

D-9.3.4 *Organization Chart for Fire Drill and Evacuation Assignment*

A chart designating employees and their assignments shall be prepared and posted in a conspicuous place in each tenancy and on each floor of a tenancy that occupies more than one floor and a copy shall be in the possession of the Fire Safety Director.

D-9.3.5 Keep available an updated listing of all personnel with physical disabilities who cannot use stairs unaided. Make arrangements to have these occupants assisted in moving down the stairs to two or more levels below fire floor. If it is necessary to move such occupants to a still lower level during the fire, move them down the stairs to the uppermost floor served by an uninvolved lifts bank and then evacuate them to the street floor by lifts. Where assistance is required for such evacuation, notify Fire Safety Director.

D-9.3.6 Provide for Fire Warden identification during fire drills and fires, such as using armband, etc.

D-9.3.7 Ensure that all persons on the floor are notified of fire and all are evacuated to safe areas. A search must be conducted in the lavatories to ensure all are out. Personnel assigned as searchers can promptly and efficiently perform this duty.

D-9.3.8 Check availability of applicable personnel on organization chart and provide for a substitute when the position on a chart is not covered.

D-9.3.9 After evacuation, perform a head count to ensure that all regular occupants known to have occupied the floor have been evacuated.

D-9.3.10 When alarm is received, the Fire Warden shall remain at a selected position in the vicinity of the communication station on the floor, in order to maintain communication with the Fire Command Centre and to receive and give instructions.

D-9.4 Building Evacuation Supervisor's Duties

A Building Evacuation Supervisor is required at all times other than normal working or business hours when there are occupants in the building and there is no Fire Safety Director on duty in the building.

D-9.4.1 He should be capable of directing the evacuation of the occupants as provided by the Fire Safety Plan.

D-9.4.2 During fire emergencies, the primary responsibility of the Building Evacuation Supervisor shall be to man the Fire Command Centre, and the direction and execution of the evacuation as provided in the Fire Safety Plan. The Building Evacuation Supervisor's training and related activities shall be under the direction of the Fire Safety Director in accordance with these rules, and the Fire Safety Plan. Such activities shall be subject to fire department control.

D-9.5 Fire Party Duties

On receipt of an alarm for fire, the Fire Party shall,

a) report to the floor below the fire to assist in evacuation and provide information to the Fire Command Centre.

b) after evacuations of fire floor, endeavour to control spread of fire by closing doors, etc.

c) attempt to control the fire until arrival of the fire department, if the fire is small and conditions do not pose a personal threat.

d) leave one member on the floor below the fire to direct the fire department to the fire location and to inform them of conditions.

e) on arrival of the fire department, the Fire Party shall report to the Fire Command Centre for additional instructions.

f) have a member designated as runner, who shall know the location of the nearest telephone, and be instructed in its use. Such member shall immediately upon receipt of information that there is a fire or evidence of fire, go to the telephone, transmit an alarm and await the arrival of the fire department and direct them to the location of the fire.

NOTE — A chart designating employees and their assignments shall be prepared.

D-9.6 Occupant's Instructions

a) The applicable parts of the approved Fire Safety Plan shall be distributed to all tenants of the building by the building management when the Fire Safety Plan has been approved by the Fire Commissioner.

b) The applicable parts of the approved Fire Safety Plan shall then be distributed by the tenants to all their employees and by the building management to all their building employees.

c) All occupants of the building shall participate and cooperate in carrying out the provisions of the Fire Safety Plan.

D-9.7 Fire Prevention and Fire Protection Programme

a) A plan for periodic formal inspections of each floor area, including exit facilities, fire extinguishers and housekeeping shall be developed. A copy of such plan be submitted.

b) Provision shall be made for the monthly testing of communication and alarm systems.

D-9.8 Building Information Form

It shall include the following information:

a) Building address.....Pin Code.....

b) Owner or person in-charge of building — Name, Address and Telephone Number.

c) Fire Safety Director and Deputy Fire Safety Director's Name and Telephone Number.

d) Certificate of occupancy. Location where posted, or duplicate attached.

e) Height, area, class of construction.

f) Number type and location of fire stairs and/or firefighting shaft.

g) Number, type and location of horizontal exits or other areas of refuge.

h) Number, type, location and operation of lifts and escalators.

j) Interior fire alarms, or alarms to central stations.

k) Communications systems and/or walkie-talkie, telephones, etc.

m) Standpipe system; size and location of risers, gravity or pressure tank, fire pump, location of siamese connections, name of employee with certificate of qualification and number of certificate.

n) Sprinkler system; name of employee with Certificate of Fitness and certificate number. Primary and secondary water supply, fire pump and areas protected.

p) Special extinguishing system, if any, components and operation.

q) Average number of persons normally employed in building (Daytime and night time).

r) Average number of persons with disabilities in building and their location (Daytime and night time).

s) Number of persons normally visiting the building (Daytime and night time).

t) Service equipment such as:

1) Electric power, primary, auxiliary;
2) Lighting, normal, emergency, type and location;
3) Heating, type, fuel, location of heating unit;
4) *Ventilation* — with fixed windows, emergency means of exhausting heat and smoke;
5) *Air conditioning systems* — Brief description of the system, including ducts and floors serviced;
6) Refuse storage and disposal;
7) Firefighting equipment and appliances, other than standpipe and sprinkler system; and
8) Other pertinent building equipment.

u) Alternations and repair operations, if any, and the protective and preventive measures necessary to safeguard such operations with attention to torch operations.

w) Storage and use of flammable solids, liquids and/or gases.

y) Special occupancies in the building and the proper protection and maintenance thereof. Places of public assembly, studios, and theatrical occupancies.

D-9.9 Representative Floor Plan

A floor plan, representative of the majority or the floor designs of the entire building, shall be at the Command Post, in the main lobby, under the authority of the Fire Safety Director. One copy of a representative floor plan shall be submitted to the Fire department with the Fire Safety Plan.

D-9.10 Fire Safety Plan

In planning, evaluate the individual floor layouts, the population of floors, the number and kinds of exits, the zoning of the floor by area and occupants. Determine the movement of traffic by the most expeditious route to an appropriate exit and alternative route for each zone, since under fire conditions one or more exits may not be usable. This format should be used in the preparation of the Fire Safety Plan. Nothing contained in this Fire Safety Plan format shall be construed as all inclusive. All rules and other requirements shall be fully complied with.

D-9.11 Personal Fire Instruction Card

All the occupants of the building shall be given a Personal Fire Instruction Card giving the details of the floor plan and exit routes along with the instruction to be followed in the event of fire. A typical Personal Fire Instruction Card shall be as follows:

PERSONAL FIRE INSTRUCTION CARD

SEAL

NAME OF THE ORGANIZATION

ADDRESS OF THE ORGANIZATION

NAME:_____

DESIGNATION:_____

FLOOR NO. : _____

DATE : _____

FIRE WARDEN

INSTRUCTIONS

FOR YOUR OWN SAFETY YOU SHOULD KNOW

1. Two push button fire alarm boxes are provided per floor. You should read the operating instructions.
2. You should read the operating instructions on the body of the fire extinguishers provided on your floor.
3. The nearest exit from your table.
4. Your assembly point on ground floor (check with your Fire/Deputy Fire Warden).
5. FOR YOUR OWN PROTECTION YOU SHOULD REPORT TO YOUR FIRE/ DEPUTY FIRE WARDEN
   a) If any exit door/route is obstructed by loose materials, goods, boxes, etc.
   b) If any staircase door, lift lobby door does not close automatically, or does not close completely.
   c) If any push button fire alarm point, or fire extinguisher is obstructed, damaged or apparently out of order.

IF YOU DISCOVER A FIRE

1) Break the glass of the nearest push button fire alarm and push the button.
2) Attack the fire with extinguishers provided on your floor. Take guidance from your Wardens.
3) Evacuate, if your Warden asks you to do so.

IF YOU HEAR EVACUATION INSTRUCTIONS

1) Leave the floor immediately by the nearest staircase as directed.
2) Report to your Warden, at your predetermined assembly point outside the building.
3) Do not try to use lifts.
4) Do not go to cloakroom.
5) Do not run or shout.
6) Do not stop to collect personal belongings.
7) Keep the lift lobby and staircase doors shut.

YOUR ASSEMBLY POINT IS .....

ANNEX E

(*Clauses* 5.1.4 *and* 6)

ADDITIONAL REQUIREMENTS FOR HIGH RISE BUILDINGS

E-1 GENERAL

High rise buildings (15 m and above in height) shall receive special attention with respect to fire and life safety particularly with regard to planning, design, execution, maintenance and training so that the intended provisions of this Code are well implemented. These get further accentuated as the buildings go taller; some of the key aspects are as follows:

a) Staging and evacuation requirements of occupants.
b) Stack effect posing challenges towards pressurization and smoke exhaust.
c) Zoning of firefighting system to meet functional requirements of hydraulic pressure and flow.
d) Challenges experienced by fire personnel in reaching the place of fire and towards evacuation.

Aspects to mitigate these challenges require innovative approach, interaction with local fire authorities and meaningful strategic planning towards maintenance and fire drills.

E-2 EGRESS AND EVACUATION STRATEGY

One firefighting shaft shall be planned for each residential building/tower, in an educational building/ block, and for each compartment of institutional, assembly, business and mercantile occupancy types. For other occupancy types, requirement of firefighting shaft shall be ascertained in consultation with the local fire authority. The firefighting shaft shall necessarily have connectivity directly to exit discharge or through exit passageway (having 120 min fire resistance walls) to exit discharge.

Staircase and fire lift lobby of a firefighting shaft shall be smoke controlled as per **4.4.2.5** and Table 6.

It is recommended that the pressurization requirement for staircase in firefighting shaft and for other fire exit staircases in buildings greater than 60 m in height be evaluated to limit the force required to operate the door assembly (in the direction of door opening) to not more than 133 N to set the door leaf in motion. The aspect of pressurization, door area/width and door closure shall be planned in consideration to the above.

E-3 FIRE SAFETY REQUIREMENTS FOR LIFTS

The provisions as given in **7.1** to **7.2.4** under fire safety requirements of lifts in high rise buildings in Part 8 'Building Services, Section 5 Installation of Lifts, Escalators and Moving Walks, Subsection 5A Lifts' of the Code shall be applicable.

E-4 HORIZONTAL EXITS/REFUGE AREA

A horizontal exit shall be through a fire door of 120 min rating in a fire resistant wall. Horizontal exit require separation with the refuge area or adjoining compartment through 120 min fire barrier. The adjoining compartment of the horizontal exit should allow unlocked and ease of egress and exits for the occupants using defend in place strategy.

Requirements of horizontal exits are as under:

a) Width of horizontal exit doorway shall be suitable to meet the occupant load factor for egress.

b) Doors in horizontal exits shall be openable at all times from both sides.

c) All doors shall swing in the direction of exit travel. For horizontal exits, if a double leaf door is used, the right hand door leaf shall swing in the direction of exit travel.

d) Refuge area shall be provided in buildings of height more than 24 m. Refuge area provided shall be planned to accommodate the occupants of two consecutive floors (this shall consider occupants of the floor where refuge is provided and occupants of floor above) by considering area of 0.3 m^2 per person for the calculated number of occupants and shall include additionally to accommodate one wheelchair space of an area of 0.9 m^2 for every 200 occupants, portion thereof, based on the occupant load served by the area of refuge or a minimum of 15 m^2, whichever is higher, shall be provided as under:

   1) The refuge area shall be provided on the periphery of the floor and open to air at least on one side protected with suitable railings.

   2) Refuge area(s) shall be provided at/or immediately above 24 m and thereafter at every 15 m or so.

   The above refuge area requirement for D-6 occupancy requirement shall however be in accordance with **6.4.2.2.**

e) A prominent sign bearing the words 'REFUGE AREA' shall be installed at the entry of the refuge area, having height of letters of minimum 75 mm and also containing information about the location of refuge areas on the floors above and below this floor. The same signage shall also be conspicuously located within the refuge area.

f) Each refuge area shall be ventilated and provided with first aid box, fire extinguishers, public address speaker, fire man talk back, and adequate emergency lighting as well as drinking water facility.

g) Refuge areas shall be approachable from the space they serve by an accessible means of egress.

h) Refuge areas shall connect to firefighting shaft (comprising fireman's lift, lobby and staircase) without having the occupants requiring to return to the building spaces through which travel to the area of refuge occurred.

j) The refuge area shall always be kept clear. No storage of combustible products and materials, electrical and mechanical equipment, etc shall be allowed in such areas.

k) Refuge area shall be provided with adequate drainage facility to maintain efficient storm water disposal.

m) Entire refuge area shall be provided with sprinklers.

n) Where there is a difference in level between connected areas for horizontal exits, ramps of slope not steeper than 1 in 12 shall be provided (and steps should be avoided).

NOTE — Refuge area provided in excess of the requirements shall be counted towards FAR.

High rise apartment buildings with apartments having balcony, need not be provided with refuge area; however apartment buildings without balcony shall provide refuge area as given above. Refuge areas for apartment buildings of height above 60 m while having balconies shall be provided at 60 m and thereafter at every 30 m. The refuge area shall be an area equivalent to 0.3 m^2 per person for accommodating occupants of two consecutive floors, where occupant load shall be derived on basis of 12.5 m^2 of gross floor area and additionally 0.9 m^2 for accommodating wheel chair requirement or shall be 15 m^2, whichever is higher.

E-5 ELECTRICAL SERVICES

The specific requirements for electrical installations in multi-storeyed buildings given in Part 8 'Building Services, Section 2 Electrical and Allied Installations' of the Code and Section 7 of National Electrical Code 2011 shall be followed.

Wherever transformers are planned at higher floors, the HT cables shall be routed through a separate shaft having its own fire resistance rating of 120 min. Wherever HT generators are planned centrally at ground or first basement level, redundant transformers and HT cables shall be planned for buildings above 60 m in height.

E-6 FIRE PROTECTION

For residential occupancies above 120 m in height and other occupancies above 60 m in height, the sprinklers shall be fed from the main and an alternate/standby riser with suitable isolation valves. The entire sprinkler system shall be designed in accordance with good practice [4(20)].

Where the height of the building exceeds 150 m to 175 m, fire water static storage and pumps shall be required to be provided at 160 m to 180 m and thereafter at intermediate floors at higher levels enabling efficient and functional firefighting installations. The static fire

water storage tanks located at such levels shall have capacity at minimum half of the storage of underground static water storage tank prescribed in Table 7. Such tanks shall be supplemented with water supplies through one working and one standby pump of capacity 2 850 litre/min with two risers at alternate locations feeding to such fire water static storage tanks. The fire pump's requirement and capacity shall also be derived for occupancy type as per Table 7 substituting the diesel pump with electrical pump. The fire pump room at such level shall have dedicated connectivity through passageway (with 120 min integrity) from the firefighting shaft. Such fire pump room shall have 120 min fire resisting wall and provided with adequate ventilation with talk-back connectivity to the main fire pump room and Fire Command Centre.

For high rise buildings, seismic bracings shall be considered for firefighting installations depending on seismic vulnerability of the region and the type of occupancy.

E-7 FIRE AND LIFE SAFETY AUDIT

a) Fire and life safety audit shall be carried out for all buildings having a height of more than 15 m.

b) Such audits shall preferably be conducted by a third party auditor having requisite experience in fire and life safety inspections.

c) Frequency of such audits shall be once in two years.

E-8 HELIPAD

For high rise buildings above 200 m in height, provision for helipad is recommended for specific requirements like landing of fire equipment, and support facilities or other emergencies.

ANNEX F

(*Clause* 6)

ATRIUM

F-1 ATRIUM REQUIREMENTS

a) In order for an atrium to be permitted in buildings, the following shall be complied:

   1) Atrium shall be permitted in buildings of Type 1 and Type 2 construction only.

   2) The use of combustible furnishings and decorations on the floor of the atrium shall be limited and sparsely distributed.

b) Smoke detectors shall be provided on the underside of each floor protruding into the atrium, at the atrium roof and adjacent to each return air intake from the atrium. Within atrium space, beam type or aspirating type smoke detectors shall be used to ensure detection of smoke, considering factors such as stratification of smoke.

c) Where the ceiling of the atrium is more than 17 m above the floor, water based protection (automatic sprinklers) at the ceiling of atrium is not required.

d) Hydrants shall be available at the floor of the atrium and also at the adjoining upper spaces/floors of the atrium.

   Sprinklers are required to be installed for coverage of glass areas of retail, tenant and other areas adjoining the exit access corridor and atrium. Sprinklers shall be at a distance of 450 mm to 600 mm enabling cooling of such glass and limiting the extent of fire and smoke to the atrium (*see* Fig. 16). This provision does not allow similar sprinkler installation arrangement to offset fire compartmentation requirements, in which case fire barrier is required as per relevant provisions of this Part.

e) Atrium in business occupancy shall be planned with 6 air changes per hour (ACPH) while atrium in hotels and assembly occupancy shall be planned with 8 ACPH smoke extraction system.

   Such air changes shall be planned in atrium for a height of 15 m from the top.

f) Smoke exhaust fans shall be capable of operating effectively at 250°C for 120 min.

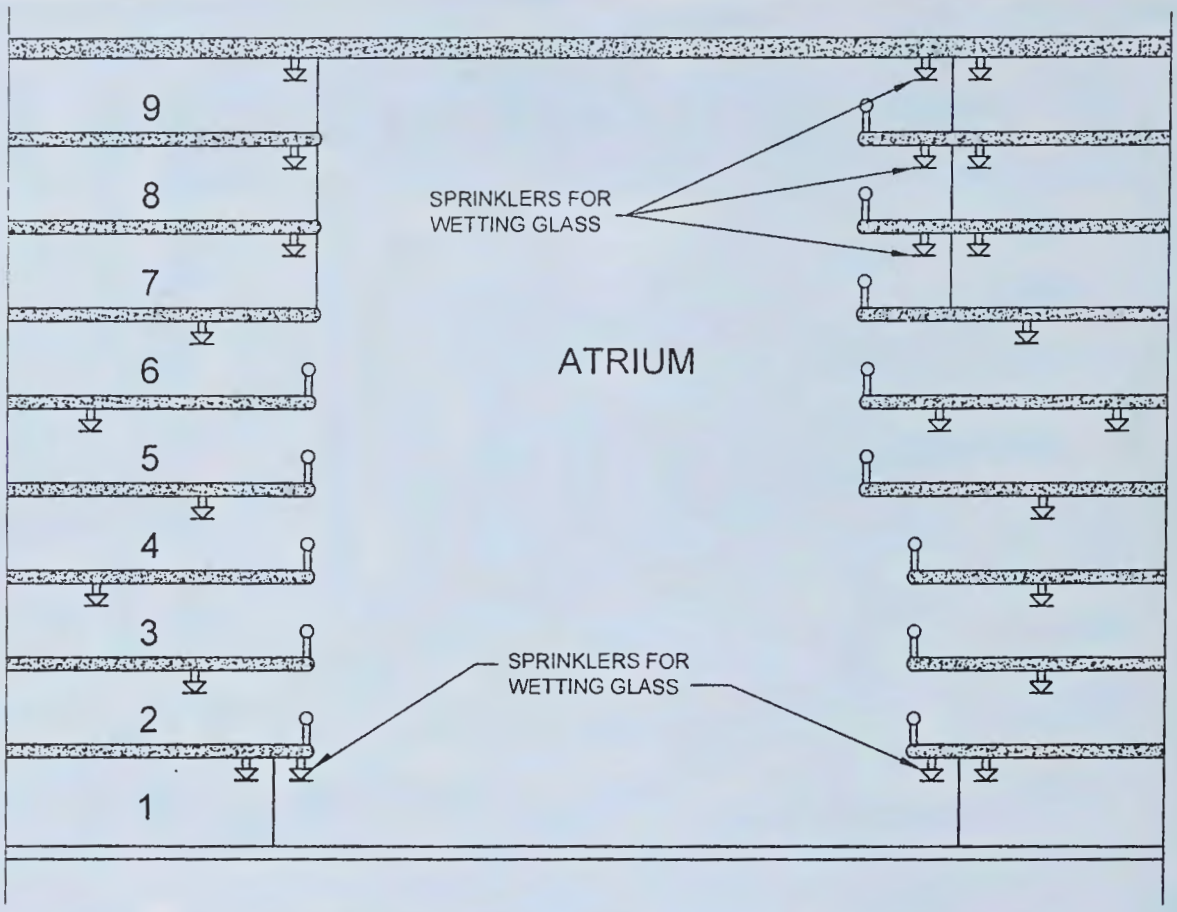

FIG. 16 SPRINKLER PROTECTION OF GLASS FOR FLOOR OPEN TO ATRIUM

g) Makeup air supply points shall be located beneath the smoke layer and on the lower levels connected by the atrium.

h) Makeup air shall be provided by fans, openings to outside to allow infiltration, or the combination thereof.

j) It is recommended that makeup air be designed at 85 percent to 95 percent of the exhaust flow rate, not including the leakage through these small paths.

k) The makeup air shall not cause door-opening force to exceed allowable limits.

m) The makeup air velocity shall not exceed 1.02 m/s where the makeup air could come into contact with the plume unless a higher makeup air velocity is supported by engineering analysis.

n) Atrium smoke management system fans shall be provided with emergency power.

p) If so required by the Authority, an engineering analysis should be performed which demonstrates that the smoke system for the atrium is designed to keep the smoke layer interface 1 800 mm above the highest occupied floor level of exit access, open to the atrium, for a period equal to 1.5 times the calculated egress time or 20 min, whichever is greater.

ANNEX G

(*Clause* 6)

COMMERCIAL KITCHENS

G-0 GENERAL

The provisions given herein are applicable to those commercial kitchens serving in centrally air conditioned buildings such as kitchens of starred hotels, food courts, malls, banquet halls and restaurants.

Electricity, gas and in some cases solid fuels such as wood or charcoal are the energy sources used to power a commercial kitchen.

The potential hazards posed by the commercial cooking facilities are as follows:

a) *On cooking appliances using oil as fuel* — The oil can self-ignite due to overheating of the cooking appliances or through open flames.

b) Full grease residues trapped in the hoods due to non-cleaning of filters and dusts periodically and exhaust ventilation system can ignite through overheated air flues or open flames.

c) Faulty electrical equipment and electrical installation are more likely to spark, and failure of thermostat and safety switches that may lead to overheat and consequent fire.

d) Flammable materials in the vicinity of open flames or heat sources

G-1 TERMS ASSOCIATED WITH COOKING OPERATIONS

a) *Types of restaurants/food preparation facilities* — Buffet restaurants, cafeterias, coffee shops, entertainment facilities (nightclubs, dinner theatres), and ethnic, fast food, speciality and traditional restaurants, corporate canteens, casinos, educational facilities, schools and universities, hospitals, care homes, mental homes and prisons.

b) *Ventilation/grease extraction equipment* — Exhaust hoods, grease removal devices, exhaust ductwork, exhaust fans, dampers and other ancillary components or systems that are involved in the capture, containment, and control of grease-laden cooking effluent.

c) *Cooking appliances* — Ranges, deep fat fryers, microwave ovens, griddles, grills, pressurized fryers, potato chip fryers, woks, broilers, doughnut fryers, barbecue/smokers, ovens, *Tandoors*, steam kettles, appliances initializing grease and cooking oils, etc.

G-2 FIRE PROTECTION SYSTEMS

a) A kitchen fire suppression system needs to be installed whenever cooking appliances are using LPG/PNG/oil/electricity and/or dry fuel like wood or charcoal for cooking and/or can ignite the exhaust or fat for cooking and/or can ignite the ventilation system. Cooking equipment that produces grease-laden vapours and that might be a source of ignition of grease in the hood, grease removal device, or duct shall be protected by fire-suppression equipment.

b) The initial fire hazard is the cooking appliance itself. However, once the exhaust ventilation system is involved in fire due to propagation from the appliances, the exhaust system becomes the more severe hazard due to the potential of fire propagation outside the cooking space.

c) The requirement for kitchen fire suppression systems shall be directly linked to measurements that actually represent the risk. Some other contributory factors could be but not necessarily — connected load (kW), area occupied by kitchen equipment, volume of cooking oil and other flammables, inter distances between equipment, cooking media, etc.

d) Grease laden hoods can be ignited by heat penetrating the outside of the kitchen hood. Any penetration to the outside of a hood, shall be either welded or fitted with an approved sealing device so as not to allow cooking grease and oil to migrate to the outer portion of the hood.

e) If sprinkler protection is specified for a building, it needs careful consideration of the likely consequences if certain portion of the building is omitted from the scope of protection, for example, no water should get on the cooking appliances (especially the fryer). Removing this protection from a high hazard area logically requires this area to be protected by a more suitable solution, dedicated to this special hazard.

G-3 FIRE SEPARATION REQUIREMENTS

a) Where a kitchen is required for the preparation of food and/or where 'open flame' cooking appliances are used and/or where fryers

(with no open flames) are used, the kitchen shall be separated from other parts of the same building by compartment wall and floor having fire resistance of at least 60 min.

b) Food serving areas shall be fire separated from the kitchens/cooking areas by fire rated elements having a resistance of at least 60 min. Doors shall have fire resistance of 60 min rating and fitted with automatic self-closing device.

c) In open type kitchen cooking area, sitting area needs to be segregated by 60 min fire rated glass or drop fire curtains [*see also* **G-3**(d) and **G-5.2**(b)].

d) Where the flue or exhaust duct passes through the compartment wall or floor, the flue or duct shall be encased by non-combustible construction and no damper shall be permitted to be installed in such flue or duct. Also such flue or ductwork shall be clear from combustible materials.

e) If the commercial kitchen/cooking is situated in a building that is not sprinkler protected, the floor area of the kitchen/cooking shall not exceed 50 m^2.

f) Commercial kitchen/cooking using LPG as fuel for the 'open flame' cooking activities shall not be allowed to be located at the basements. As regards LPG cylinder storage, attention is drawn to good practice [4(14)] and Part 8 'Building Services, Section 2 Electrical and Allied Installations' of the Code for compliance requirements

g) It is advisable to locate the kitchen/cooking operations on the external periphery of the building so that in the event of mechanical ventilation failure, it can be naturally ventilated.

G-4 Life safety and egress requirements shall be governed by the requirements under life safety (*see* **4**). In case the requirements under this annex differs from those under **4**, this annex shall take precedence.

G-5 FIRE SAFETY REQUIREMENTS

G-5.1 General

a) The following equipment must always be kept in working condition:

1) Cooking equipment,
2) Hoods,
3) Exhaust ducts (if provided),
4) Fans,
5) Fire extinguishing systems,
6) Fire detection and alarm system, and
7) Gas leakage detectors (if gas is used as fuel).

b) An automatic fixed suppression system shall be installed to protect all cooking equipment producing grease laden vapours and that might be a source of ignition of grease in the hood, grease removal device.

c) Fire-suppression equipment shall be provided for the protection of grease removal devices, hood exhaust plenums, and exhaust duct systems.

d) All fire suppression systems and components installed shall be in accordance with relevant Indian and/or International Standards.

G-5.2 Protection of Cooking Equipment (General)

a) Cooking equipment shall be protected with the following:

1) Automatic wet chemical fire suppression system for the protection of hoods (OR) other equivalent approved systems like water mist applications for kitchen fires.
2) Automatic sprinkler system for non-cooking areas (not in the vicinity of cooking areas or inside hoods).
3) Exhaust ducts shall be protected by automatic high temperature sprinklers designed as per good practice [4(20)].

b) Due diligence shall be exercised before considering protection with sprinkler/water mist installation particularly for the protection of fryers. No sprinklers shall be provided within 3 m of cooking equipment and kitchen hoods. Area sensitive to sprinklers shall be protected with wet chemical suppression systems or other approved systems for the type of protection. Water mist systems, if approved for use for the type of application (that is, commercial cooking equipment) by fire tests, may also be considered.

c) Kitchen hoods independent suppression systems shall discharge wet chemicals to all areas of a kitchen range extract hood that is potentially coated in grease. The system shall also discharge over deep fat cooking pans or other potential fire source. The system shall be activated by heat detectors located above the appliances/within hoods and in the entrance to exhaust duct. Additional detectors behind equipment in the duct may be

necessary. These may be of fusible link type. Extinguishing systems shall also incorporate manually actuating devices which shall be located in easily accessible locations in the means of egress.

d) The operational sequence shall be as follows:

1) On detection of fire in the hood and upon actuation of fire suppression system, any power or gas supplies serving the kitchen equipment must be cut-off and isolated automatically.

2) Pressure regulating stations shall be designed and installed at critical locations for excess flow shut off valves.

3) Seismic shut off valve at the main distribution point shall also be provided.

4) The exhaust fan shall not stop and continue operating, even after activation of the system. The supply fan shall switch off.

5) Gas leakage detectors shall be provided in all kitchens that link to a gas solenoid valve for emergency shut off. Suitable gas detection system (based on type of gas used LPG or PNG) integrated with fire detection and alarm system must be provided in addition to heat/multi-criteria detectors and sprinklers.

6) Manually operating devices shall immediately activate fire suppression system, which in turn shall shut off other systems like fuel supply/power supply, etc. Manual system shall operate mechanically and not rely on electrical power for activation, unless this is from an emergency power source as described in this Code.

7) In the event of the kitchen hood system being activated, an alarm should be sounded. The system must also be interfaced with the fire detection and alarm system.

e) Fire extinguishers in the vicinity of cooking area and the hoods shall be suitable for the type of fire.

G-5.3 Cooking Equipment Exhaust Ventilation

a) Hoods/ducts containing automatic fire suppression systems are protected areas; therefore, these hoods are not considered obstructions to overhead sprinkler systems and shall not require floor coverage underneath thereof.

b) Sprinkler installation shall comply with various provisions contained in accepted standard [4(28)]. The temperature rating of sprinklers shall be so selected that it is 30°C above the anticipated maximum temperature within cooking/kitchen areas. Sprinklers provided inside the exhaust ducts shall be of 141°C temperature.

c) Provision of cleaning of the kitchen exhaust every six months to ensure that the carbon soot accumulated in the exhaust duct is cleaned to avoid the chances of outbreak of fire shall be made.

d) Independent exhaust ducts shall be provided for equipment using dry fuel like wood/ charcoal which produce spark and are likely to ignite the grease which might have accumulated in the common duct. Alternatively, approved spark arrestors may be provided before the duct from equipment using dry fuel meets the main duct. These spark arrestors shall be so provided that these are easily accessible and removable for cleaning.

G-5.4 Cooking Equipment

a) Cooking equipment (such as deep fat fryers, rangers, griddles, and broilers) that may be a source of ignition shall be provided in accordance with the provision of **G-5.2**(a).

b) The operation of any sprinkler within the kitchen or cooking area shall automatically shut off all sources of fuel and heat to all equipment requiring protection. Any gas appliance not requiring protection but located under ventilating equipment shall also be shut off. All shutdown devices shall be of the type that requires manual resetting prior to fuel or power being restored.

c) An approved indicating valve (flow indicating switch) shall be installed in the water supply line feeding to the sprinklers protecting the cooking and extraction ventilating system.

d) A system test connection shall be provided to verify proper operation of equipment specified in item **G-5.2**(d)(4).

e) Sprinklers shall be inspected at least twice in a year and cleaned, if found coated with grease and other particles during their use and thus their thermal sensing elements desensitized.

f) Any penetrations to the outside of a hood, be either welded or fit with a sealing device (certified by national/international approval bodies) to not allow cooking grease, oil to migrate to the outer portion of the hood. The fitment arrangements shall be of approved type. Gaskets for the panels shall be certified to withstand a temperature of 815.6°C (1 500°F).

g) Grcase strip shall be readily available for efficient and regular cleaning of concrete or paved floors of kitchen and restaurant and also the drainage areas.

h) The hood or that portion of a primary collection means designed for collecting cooking vapours and residues shall be constructed of and be supported by steel not less than 1.09 mm (No. 18 MSG) in thickness or stainless steel not less than 0.94 mm (No. 20 MSG) in thickness or other approved material of equivalent strength and fire and corrosion resistance.

j) All seams, joint, and penetrations of the hood enclosure that direct and capture grease-laden vapours and exhaust gases shall have a liquid tight continuous external weld to the hood's lower outermost perimeter.

k) Grease filters shall be of steel rigid construction that will not distort or crush under normal operation handling and cleaning conditions. They shall be so arranged that all exhaust air passes through the grease filters. Filters shall be easily accessible and removable for periodic cleaning.

m) Grease filters shall be installed at an angle not less than 45° from the horizontal.

n) Grease filters shall be equipped with a grease drip tray beneath their lower edges and shall have a suitable minimum depth needed to collect grease. The grease drip trays shall be pitched to drain into an enclosed metal containcr having a capacity not exceeding 3.8 litre.

p) The exhaust ducts shall be constructed of and supported by carbon steel not less than 1.37 mm (No. 16 MSG) in thickness or stainless steel not less than 1.09 mm (No. 18 MSG) in thickness.

G-5.5 Rooftop Terminations — Exhaust Systems

a) The exhaust system shall terminate either outside the building with a fan or duct or through the roof or to the roof from outside with minimum 3 m of horizontal clearance from the outlet to the adjacent buildings, property lines and air intakes.

b) There shall be a minimum of 1.5 m of horizontal clearance from the outlet (fan housing) to any combustible structure.

c) There shall be a vertical separation of 1.0 m below any exhaust outlets for air intakes within 3.0 m of the exhaust outlet.

ANNEX H

[*Clauses* 6.4.2.2 *and* 6.8.1.5]

CAR PARKING FACILITIES

H-1 The provisions given in **H-2** to **H-5** shall apply to parking structures of the closed or open type, within buildings above or below grade.

H-2 GENERAL

a) Where both parking and repair operations are conducted in the same building, the entire building shall comply with the requirements for Group G occupancies, unless the parking and repair sections are effectively separated by separation walls of 120 min.

b) Floor surfaces shall be non-combustible, sloping towards drains to remove accumulation of water.

c) Those parts of parking structures located within, immediately above or below, attached to, or less than 3 m away from a building used for any other purpose shall be separated by fire resistant walls and floors having fire resistance rating of not less than 120 min. This shall exclude those incidental spaces which are occupied by cashier, attendant booth or those spaces used for toilets, with a total area not exceeding 200 m^2.

d) Vehicle ramps shall not be considered as exits unless pedestrian facilities are provided.

e) Other occupancies like fuel dispensing, shall not be allowed in the building. Car repair facilities, if provided, shall be separated by 120 min fire resistant construction.

f) In addition to fire protection requirements as per Table 7, appropriate fire detection and suppressions systems shall be provided for the protection of hydraulic oil tank and pumps located below ground level for operation of car lifts.

g) Means of egress shall meet the requirements specified in **4**.

H-3 OPEN PARKING STRUCTURES (INCLUDING MULTI-LEVEL PARKING AND STILT PARKING)

a) The term open parking structure specifies the degree to which the structure's exterior walls must have openings. Parking structures that meet the definition of the term open parking structure provide sufficient area in exterior walls to vent the products of combustion to a greater degree than an enclosed parking structure.

b) A parking structure having each parking level wall openings open to the atmosphere, for an area of not less than 0.4 m^2 for each linear metre of its exterior perimeter shall be construed as open parking structure. Such openings shall be distributed over 40 percent of the building perimeter or uniformly over two opposing sides. Interior wall lines shall be at least 20 percent open, with openings distributed to provide ventilation, else, the structure shall be deemed as enclosed parking structures.

NOTE — A car park located at the stilt level of a building (not open to sky) can be considered an open or an unenclosed car park if any part of the car park is within 30 m of a permanent natural ventilation opening and any one of the following is complied with towards the permanent natural ventilation requirement:

i) 50 percent of the car park perimeter shall be open to permanent natural ventilation.

ii) At least 75 percent of the car park perimeter is having the 50 percent natural ventilation opening.

c) All stilt parking are required to be provided with sprinkler system where such buildings are required to be sprinklered.

d) Open parking structures are not required to be provided with compartmentation.

e) Open car parking (open to sky) within building complex having fire hydrant system shall also need to be protected with yard hydrant installation system in accordance with good practice [4(29)].

H-4 ENCLOSED PARKING STRUCTURES

a) Those car parking structures which are enclosed on all sides and on top, not falling within the definition of open car parking [*see* **H-3**(b)] and also those situated in the basements shall be known as enclosed car parking structures.

b) All sprinklers in car parking shall be standard response type with minimum K-Factor of 80, area coverage of 9 m^2 and designed as per good practice [4(20)].

c) For basement car parking, compartmentation can be achieved, with fire barrier or with water curtain nozzle (K-23) or with combination thereof. Automatic deluge system comprising deluge valve, piping, nozzles, etc shall be used to zone the compartment in case of water curtain system. In case of water curtain, existing water storage shall be supplemented by water demand for water curtain nozzles for 60 min considering the largest compartment's perimeter out of all compartments of car parking in any of the basements.

d) The water supply for the water curtain nozzles shall be through independent electric pump of adequate capacity (flow and head) with piping/riser for the water supply to the nozzles.

e) The water curtain shall be operated by the actuation of flow switch actuating sprinkler system.

f) For smoke ventilation requirement of car parking, *see* **4.6.2**.

g) All fire exit doors from the car parking to exits shall be painted green and shall display exit signage.

H-5 AUTOMATED CAR PARKING UTILIZING MECHANICAL OR COMPUTERIZED/ ROBOTIC MEANS

a) Automated car parking structure can be of open parking type or enclosed types.

b) Automated car parking facilities pose more hazard compared to manual parking due to following reasons:

1) High density of cars due to close stacking-one over another.

2) Lack of provision on fire separation/ compartmentation-horizontal or vertical leading to rapid fire spread.

3) Non-availability of any person to notice/ control the fire in initial stages.

4) Limited access to firefighting personnel.

5) Extensive height and depth involved with highly combustible load.

c) Fire escape staircases, at least 1 250 mm wide shall be provided at appropriate locations so

that no place is more than 45 m from the nearest staircase. Horizontal walkways, at least 1 000 mm wide for access to all the areas shall be provided at every parking level.

d) Travel distance and means of egress shall be governed by the respective sections of this Code.

e) The hazardous areas like DG sets, transformers, HT/LT panels for the parking lot shall be suitably segregated from other areas as per requirements given in this Code and all such areas shall be protected by suitable automatic fire suppressions systems.

ANNEX J

(*Clause* 6.4.4)

FIRE AND LIFE SAFETY REQUIREMENTS FOR METRO STATIONS

J-1 APPLICATION AND SCOPE

The provisions of this annex relates to the buildings constructed as part of the metro stations/metro rail systems.

J-2 TERMINOLOGY ASSOCIATED WITH METRO FACILITIES

For the purpose of this annex, the terminologies given at **2.43** shall apply.

J-3 GENERAL

J-3.1 Classification

Metro stations can be classified under 'Assembly occupancies'. These shall include any station building or part thereof, permanent or temporary, through which people transit for the duration of time required to enter the building and board the train to depart the station platform or to alight from the train and depart from the station building.

J-3.2 Sub-classification

Metro stations can be further classified under the following headings:

a) Elevated and enclosed stations,

b) Elevated and open stations, and

c) Underground stations.

NOTE — The above shall include all open and enclosed Metro Stations along with their associated ancillary structures and train depots. Elevated shall mean to include 'at-grade' stations as well.

J-3.3 Fire Zones

Metro stations, that is, mass rapid transit may be constructed within Fire Zone No. 1, 2 or 3, as per the transportation requirement.

J-3.4 Type of Construction

Metro stations shall conform to Type 1 or Type 2 or combinations of Types 1 and 2 non-combustible constructions, as defined in **3.3**.

J-4 LIFE SAFETY REQUIREMENTS

J-4.1 Occupant Load

a) Main occupant load in a transit station is the platform occupant load, on which basis the life safety provisions of transit stations are designed. Occupant loads in transit stations are mainly a function of the train carrying capacities rather than the areas of a station.

b) For calculating platform occupant loads for a multiline, multilevel or multiplatform station, maximum occupant load for each platform shall be considered separately for determining the egress capacity from that platform.

c) At levels where egress routes from separate platforms converge, occupant loads of all platforms shall be considered to calculate egress capacity from that level. Simultaneous loads shall be considered for all egress routes passing through each level of that station.

d) Platform occupant load shall be based on the greater of the AM or PM 'peak hour loads' generated by the system and train loads.

e) Peak hour load shall be converted to peak minute loads by dividing by 50 and multiplying further by a system surge factor varying from 1.15 to 1.5, as defined by the transit system authority. Surge factor may require to be further enhanced where increased footfalls are anticipated like stations catering to sports complex, etc.

f) Platform occupant load shall be determined by factoring in the peak hour entraining loads at platform edges and train loads, in emergency evacuation scenario, as defined here:

1) *Train on fire* — It is assumed that a train loaded to crush capacity travelling in peak direction at peak hour has caught fire, and as per the operating procedure it is brought to the next station, whereupon it shall require to be evacuated.

2) The train in this case being called the 'incident train' and the platform on which it is arriving being called 'incident platform' of the 'incident station'.

3) Passengers waiting on all the platforms of the 'incident station' shall require to be evacuated as well.

4) Number of passengers shall be determined as defined in (g) below.

5) Only one source of fire, that is, train fire shall be assumed at a time.

6) It is assumed that the train on non-incident platform shall not stop at the incident station and shall stop only at previous/ next station.

g) Platform occupant load, for emergency evacuation scenario, shall be the addition of two headway entraining loads for peak direction platform, one headway entraining load for off-peak direction platforms and one crush train load.

NOTE — *See also* **J-4.1**(b) and **J-4.1**(c).

h) *Occupancy in non-public areas*:

1) Use of designated non-public areas by station staff whose work assignments require their presence in the station structures shall be permitted.

2) Unmanned plant rooms and any other areas where usual occupancy is less than10 persons at any given time shall be treated as unoccupied areas.

j) *Segregation with non-transit occupancy*:

Non-transit occupancies, of area up to 250 m^2, shall be permitted to be accommodated within the station building. Occupant load of areas under non-transit occupancies shall be in accordance with Table 3.

J-5 EGRESS PROVISIONS

J-5.1 Evacuation Time

a) *Means of egress — Public areas* — Egress from metro station shall be designed to facilitate the evacuation of a pre-defined platform occupant load to a designated point of safety in pre-defined emergency scenario(s), as defined by the transit system authority.

b) *Evacuation time from platform* — Enough egress capacity shall be provided to evacuate the platform occupant load within 4 min from enclosed stations and within 5.5 min from open stations.

c) *Evacuation time to point of safety* — Further, station design should permit evacuation of the remotest person on platform to a point of safety within 6 min in case of enclosed stations and within 8 min in case of open stations.

NOTE — Evacuation time specified in (b) and (c) may be modified based on actual engineering analysis by evaluating material heat release rates, station geometry and emergency ventilation systems.

d) For open stations where the concourse is below or protected from the platform by distance or materials as determined by an appropriate engineering analysis, that concourse shall be permitted to be defined as a point of safety.

e) For enclosed stations equipped with an emergency ventilation system and where the emergency ventilation system provides protection for the concourse from exposure to the effects of a train fire at the platform as confirmed by engineering analysis, that concourse is permitted to be defined as a point of safety.

J-5.2 General Arrangement

a) Means of egress from each station platform shall be provided so that they are equally distributed as far as possible, in capacity and placement, throughout the length of platform.

b) There shall be at least two means of egress remote from each other.

c) Means of egress may however be allowed to converge at concourse or subsequent levels with sufficient capacity to achieve the required evacuation time.

d) As far as possible, all the egress capacity required for emergency evacuation shall be provided with the unenclosed stairs and escalators which are used for normal circulation.

J-5.3 Travel Distance

The maximum travel distance on the platform to a point at which a means of egress route leaves the platform shall not be more than 100 m. This shall however be subject to fulfilling the egress requirements specified in J-5.2.

J-5.4 Means of Egress

J-5.4.1 *Non-public Areas*

Means of egress from unoccupied non-public areas shall be permitted to be merged into public means of egress.

J-5.4.2 *Non-transit Occupancies*

Separate means of egress shall be provided for such non-transit occupancies which are segregated from the station public area to ensure independent evacuation from either occupancy. Such means of egress may be allowed to converge beyond station concourse area with the approval of the competent authority.

J-5.4.3 *Platform, Corridors, Ramps*

Platforms, corridors and ramps serving as means of egress shall be designed as per following criteria:

a) A minimum clear width of 1 200 mm shall be provided along all platforms, corridors, and ramps serving as means of egress.

b) In computing the means of egress capacity available on platforms, corridors, and ramps, 300 mm shall be deducted at each sidewall, and 450 mm shall be deducted at platform edges that are open to the trainway.

c) The maximum means of egress capacity of platforms, corridors, and ramps shall be computed at 0.082 0 people/mm-min.

d) The maximum means of egress travel speed along platforms, corridors, and ramps shall be computed at 38.0 m/min.

e) The means of egress travel speed for concourses and other areas where a lesser pedestrian density is anticipated shall be computed at 60.0 m/min.

J-5.4.4 *Stairways*

a) Unenclosed stairs and escalators shall be permitted to be counted as contributing to the means of egress capacity in stations.

b) Minimum widths of such unenclosed staircases shall be 1 800 mm for unidirectional stairs, and 2 400 mm for bi-directional stairs.

c) Wall or floor mounted railings on both sides shall be permitted on stairs without affecting the widths stated in (b) above by more than 300 mm.

d) Enclosed stairs in the means of egress shall be minimum 1 200 mm wide.

e) Capacity and travel speed for stairs shall be computed at 0.055 5 people/mm-min and 14.6 m/min, respectively.

J-5.4.5 *Escalators*

a) Escalators shall not account for more than one-half of the means of egress capacity at any one level.

b) In calculating the egress capacity of escalators,
   1) one escalator at each level shall be considered as being out of service, and
   2) the escalator chosen shall be the one having the most adverse effect upon egress capacity.

c) Where escalators are permitted as a means of egress in stations, the following criteria shall be complied with:
   1) The escalators shall be constructed of non-combustible materials (exceptions like rollers and handrails shall be permitted with the approval of the Competent Authority).
   2) Escalators running in the direction of egress shall be permitted to remain operating.
   3) Escalators running reverse to the direction of egress shall be capable of being stopped either locally by a manual stopping device at the escalator or remotely by a manual stopping device at a remote location or remotely as part of a pre-planned evacuation response. A stopped escalator shall be counted as equivalent to 1 m wide staircase.

d) Where provision is made for remote stopping of escalators counted as means of egress, one of the following shall apply:

   The stop shall be delayed until it is preceded by a minimum 15 s audible signal or warning message sounded at the escalator; wherein (1) the signal or message shall have a sound intensity that is at least 15 dBA above the average ambient sound level for the entire length of the escalator, (2) the signal shall be

distinct from the fire alarm signal, and (3) the warning message shall meet audibility and intelligibility requirements.

OR

Where escalators are equipped with the necessary controls to decelerate in a controlled manner under the full rated load, the stop shall be delayed for at least 5 s before beginning deceleration, and the deceleration rate shall be no greater than 0.052 m/s^2.

e) Escalators with or without intermediate landings shall be acceptable as a means of egress, regardless of vertical rise.

f) Escalators exposed to the outdoor environment shall be provided with slip-resistant landing and floor plates.

g) Stopped escalators shall be permitted to be started in the direction of egress in accordance with the requirements for stopping of escalators described in **J-5.4.5**(c)(3) and **J-5.4.5**(d).

h) Capacity and travel speed for escalators shall be computed at 120 people/min and 18.5 m/min (vertical component of travel speed), respectively.

J-5.4.6 *Lifts*

Lifts meeting the following requirements shall be counted as one of the means of egress in stations.

J-5.4.6.1 *Capacity of lifts*

Where lifts are counted as contributing to the means of egress capacity,

a) lifts shall have minimum 60 min fire resistance rating;

b) they shall account for no more than 50 percent of the required egress capacity;

c) at least one lift shall be considered out of service, and one lift shall be reserved for fire service; and

d) the capacity of each lift shall be the carrying capacity of the lifts within 30 min.

J-5.4.6.2 *Holding area for lifts*

Lifts counted as one of the means of egress from any level of a station shall be accessed through holding areas or lobbies at that level, which shall be designed as follows:

a) The holding areas or lobbies shall be separated from the platform by a smoke tight fire separation having a fire resistance rating of at least 60 min but not less than the time required to evacuate the holding area occupant load.

b) At least one stair shall be accessible from the holding area.

c) The holding area shall be sized to accommodate one person per 0.2 m^2.

d) If the holding area includes portions of the platform, the area within 600 mm of the trainway shall not be considered in the calculation.

e) Upon activation of smoke control in the platform or adjacent trainway areas, the holding area shall be pressurized to a minimum of 25 Pa.

f) The holding area shall be provided with emergency voice alarm devices with two-way communication to the system operations control centre.

J-5.4.6.3 *Design features of lifts*

Lifts counted as one of the means of egress shall be designed as follows:

a) Shaft enclosures shall be constructed as fire separations having a 120 min fire resistance rating.

b) The design shall limit water flow into the shaft.

c) No more than two lifts used for means of egress or fire department access shall share the same machine room or lifts pit.

d) Machine rooms shall be separated from each other by fire separation having a minimum fire resistance rating of 120 min.

e) The lifts shall be connected to back-up power supply.

f) During emergency evacuation, the lifts shall travel only between the incident level and a point of safety.

J-5.4.7 *Doors and Gates*

The egress capacity for doors and gates in a means of egress serving public areas shall be computed as,

a) 60 people per minute (p/min) for single leaf doors and gates,

b) 0.082 people/mm-min for bi-parting multi-leaf doors and gates measured for the clear width dimension, and

c) gates in a means of egress shall be designed in accordance with the requirements for doors serving as a means of egress.

J-5.4.8 *Fare Barriers*

a) Fare barriers complying with following provisions shall be permitted in the means of egress serving the stations. Such barriers shall be designed to release, permitting unimpeded

travel in the direction of egress under all the following conditions:

1) Power failure or ground fault condition,
2) Activation of the station fire alarm signal, and
3) Manual activation from a switch in a constantly attended location in the station or operations control centre.

b) Fare barriers that do not comply with the requirements of **J-5.4.8**(a) shall be permitted in the means of egress where barriers in the equipment are designed to provide egress when a horizontal force not exceeding 66 N is applied in the egress direction.

c) Gate-type fare barriers in the means of egress shall meet the following criteria:

1) Each unit shall provide a minimum of 450 mm clear width at and below a height of 1 000 mm and 530 mm clear width above that height.
2) Each unit shall be credited with a capacity of 50 p/min for egress calculations.
3) Fare barriers shall be designed so that their failure to operate properly will not prohibit movement of passengers in the direction of emergency egress.

J-5.4.9 *Horizontal Exits*

Horizontal exits shall be permitted for up to 100 percent of the number of horizontal exits and required egress capacity provided that not more than 50 percent of the number and required capacity is into a single building and provided they comply with the following provisions:

a) Width of the horizontal exit shall at least be same as that of the exit doorways;
b) A horizontal exit shall be equipped with at least one fire/smoke door of minimum 60 min fire resistance, of self-closing type. Further, it should have direct connectivity to the egress staircase for evacuation.
c) Where there is a difference in level between connected areas for horizontal exits, ramps, slope not more than 1 in 12 shall be provided.
d) Doors in horizontal exits shall be able to open at all times from both sides.

J-5.4.10 *Platform Screen and Edge Door*

Horizontal sliding platform screen or platform edge doors shall be permitted to separate the platform from the trainway in stations provided that the doors permit emergency egress from the train to the platform regardless of the stopping position of the train; and the doors provide egress when a force not exceeding 220 N is applied from the train side of the doors. The doors shall be designed to withstand positive and negative pressures caused by passing trains.

J-5.4.11 *Access for Fire Brigade Personnel*

A dedicated access staircase for firemen shall be provided in each underground station. This access shall be arranged so as to provide uninterrupted access from ground level to station concourse and platform levels. If continuous access is not feasible, smoke sealed lobbies shall be provided at concourse or other intermediate levels and such lobbies shall be protected with fire doors of adequate rating. Firemen staircases shall be maintained under positive pressure at all times.

J-5.4.12 Emergency and escape lighting and illumination of means of all exits shall comply with the various provisions under **3.4.7** in all respects.

J-6 FIRE SEPARATION AND COMPARTMENTATION

J-6.1 Fire compartments shall be provided in transit stations in accordance with the provisions of this Section. Fire ratings of various occupancies within open stations and enclosed stations shall be as indicated in Table 27.

J-6.2 Further transit station shall be divided into fire compartments by means of compartment walls and compartment floors by a fire separation of at least 120 min between following occupancies:

a) Public areas and non-public areas,
b) Transit and non-transit areas, and
c) Ancillary areas located beneath and within 3 m of the trainway in open stations

J-6.3 No fire separation shall be required for occupancies like ticketing offices, toilets, other offices and the like.

J-6.4 Incidental kiosks inside stations for other purposes like commercial use, etc shall be fire separated (120 min rating) from the station building, if areas occupied by such occupancies exceed 6 m^2.

J-6.5 Fire Doors

Fire doors shall comply with the following requirements:

a) Fire doors shall be constructed of non-combustible material having appropriate fire resistance, and two fire doors may be fitted in an opening if each door by itself is capable of closing the opening and the two doors together achieve the required level of fire resistance.
b) All fire doors shall be fitted with an automatic self-closing device, of same fire rating as of the door, which is capable of closing the door

Table 27 Fire Ratings for Mass Rapid Transit Station Occupancies
(*Clause* J-6.1)

Sl No.	Occupancies	Fire Rating of Enclosures h		Fire Rating of Doors h	
		Open Station	Enclosed Station	Open Station	Enclosed Station
(1)	(2)	(3)	(4)	(5)	(6)
i)	Auxiliary substation, electrical UPS/battery room	2	3	1.5	3
ii)	Signalling equipment room, telecom equipment room, S&T (signalling and train control) UPS/battery room, electrical cable shafts, S&T cable shafts	2	2	1.5	1.5
iii)	Environmental control system (ECS) plant room, tunnel ventilation room, firemen's staircase, emergency equipment store, CDMA room, GSM room, sewage ejector room, sump pump room, chiller plant room, pump room, DG panel room	2	2	1.5	1.5
iv)	Station manager room, cash and ticket supervisor room, security room, stores, cleaners room, refuse storage, toilets, plumbing shafts, staff mess rooms, distribution board room and the like.	1	2	0.5	1.5

from any angle and against any latch fitted to the door.

c) Any fire door fitted within an opening which is provided as a means of escape shall be capable of being opened manually, not be held open by any means other than by an electromagnetic or electro-mechanical device which can be activated by the presence of smoke and/or the fire alarm system, provided that this shall not apply in the case of fire doors opening into pressurised exit staircases.

J-6.6 Smoke Compartmentation

a) Smoke compartments shall be created to ensure that in case of a fire scenario, the escape routes are not full of smoke and a safe passagc is provided to fire fighters to reach fire location.

b) Smoke barriers shall be provided within the ceiling at platform and concourse levels at locations and spacing as determined by the engineering analysis and shall be designed to withstand temperatures up to 250°C for 60 min.

c) Smoke barriers shall also be provided around all openings containing staircases, escalators and lifts in public areas connecting platform to levels above or below them.

d) All smoke compartments created within the station areas shall bc designed with segregated smoke extraction systems.

J-7 OTHER SPECIFICS REGARDING SAFETY REQUIREMENTS

a) Materials used as interior wall and ceiling and other decorative features in enclosed stations shall be non-combustible.

b) For protection against intrusion of flammable and combustible liquids and flooding of underground transit systems, any structure including emergency egress or access stairs or vent or fan shaft structure utilized for ventilation of underground system shall be permitted to be terminated at grade, provided that the level at which it is terminated is at least 450 mm above the surrounding ground level/footpath level.

c) Emergency ventilation fans, their motors, and all related components exposed to the exhaust airflow shall be designed to operate in an ambient atmosphere of 250°C for a minimum of 60 min.

d) Operation of the emergency ventilation system components shall be initiated from the central supervising station.

e) All types of kiosks like ticketing booth, information counter, commercial, if any, etc, shall be constructed with non-combustible materials.

f) Enclosed stations shall be provided with back-up power connected to lighting, protective signalling systems, emergency communication system, and fire command centre.

g) Emergency lighting shall be provided throughout the station as per **3.4.7.1**.

h) Voice evacuation/public address system shall be provided throughout the station, and ancillary buildings as per requirements.

j) Equipment rooms shall be protected by firc suppression systems as per relevant standards.

k) Emergency command centres and emergency response procedures shall be in place.

m) Evacuation shall take place under the guidance and control of authorized, trained system employees or other authorized personnel as warranted under an emergency situation.

n) Adequate warning signs, directional signs, exit signs shall be provided throughout the facility.

J-8 BACK-UP OR EMERGENCY POWER SUPPLY

The back-up/emergency power supply shall have a capacity to cater all critical loads such as emergency lighting, protective signalling system, communication system, fire station and control room, lifts providing required egress capacity, etc.

J-9 FIRE PROTECTION FACILITIES

The following requirements shall apply to all open and enclosed metro stations above grade. Provisions for underground stations are not covered hereunder.

J-9.1 Details of Protection and Facilities Required

J-9.1.1 *Pumping Arrangements*

Each station shall be provided with two pumps having a minimum discharge of 1 620 litre/min with different prime movers. It is possible to provide two electrically driven pumps, if assured back-up power is available for driving the pumps. Jockey pump having a capacity of 180 litre/min shall also be provided to take care of minor system leakages. Electrical wiring for the pumps shall be routed from outside the station buildings in any case (*see also* **J-9.1.9**).

J-9.1.2 *Extinguishers*

a) Water CO_2 type, CO_2/ABC types, shall be provided in each platform and distributed in such a way that extinguisher is available within a travel distance of 30 m from any point.

b) Water CO_2 type, CO_2/ABC types, shall be provided in each concourse for every 300 m^2 floor area and distributed in such a way that extinguisher is available within a travel distance of 30 m from any point.

c) At least one extinguisher shall be provided for each equipment room and other enclosures for every 300 m^2 floor area.

J-9.1.3 *Small Bore Hose Reels*

a) One hose reel shall be provided for every 1 000 m^2 floor area of station platform or part thereof subject to a travel distance of 45 m to the nearest hose reel.

b) One hose reel shall be provided for every 1 000 m^2 floor area concourse or part thereof subject to a travel distance of 45 m to the nearest hose reel.

c) If equipment rooms are covered with hose reels for concourse and platform, it is acceptable.

J-9.1.4 *Fire Alarm System*

a) Provisions of detection system shall be purely based on judgement in metro stations. Detectors are required to be provided only in areas where there are false ceiling(s), false floor(s) and areas for equipment rooms. Wherever there are false ceilings, the detectors shall be provided both above and below false ceiling giving due consideration to depth of false ceiling/flooring. However, in concourse, the detectors below false ceiling may not be effective due to heights/cross ventilation and therefore may not be provided. In other areas, because of high heights and cross-ventilations, detectors will not be effective and hence they can be dispensed. A conventional detection system shall suffice at a normal station.

b) Manual call station(s) shall be provided at central location(s) on each platform (near emergency plunger) and at least two on the concourse, on each sidewall. When the concourse is in two halves, at least one manual call station shall be provided on each side.

J-9.1.5 *Clean Agent Suppression System*

Main panels like HT, LT and main power distribution, DG change over and main supply panels for the station shall be protected with the above system. Suitable detection mechanism shall be provided for triggering the system automatically.

J-9.1.6 *Provision of Hydrants and Wet Risers*

a) Minimum two hydrants shall be provided at each platform with hose box containing two lengths of hose pipes 15 m each with a nozzle (coverage about 45 m). Location of hydrants shall be staggered for better coverage. The hydrants shall cover the entire length of the platform when two hose pipes are coupled to the landing valves and used. If not fully covered, additional hydrant(s) shall be provided.

b) Minimum two hydrants shall be provided for each concourse with hose box containing two lengths of hose pipes 15 m each with a nozzle subject to travel distance of 30 m to reach the nearest hydrant. Commercial areas, if any, shall also be covered with the provision of hydrants as stated above. If equipment rooms

and other areas are covered within 30 m of the hydrants, the same are acceptable.

c) Hydrants shall be provided at each entry to the station at ground and upper levels near staircase. At least one hydrant for parking area shall be provided subject to a travel distance of 30 m to the nearest hydrant.

J-9.1.7 *Automatic Sprinkler System*

Sprinklers are required to be provided only in the commercial areas and any combustible storage area within the station (*see also* **J-9.1.9**).

J-9.1.8 *Water Requirement*

a) For stand-alone metro stations, exclusive water requirement for the fire protection system for the installed pumping capacity as stated in **J-9.1.1** shall be at least 50 000 litre.

b) However, when commercial areas are present within metro stations. firefighting facilities shall need augmentation as in **J-9.1.9**.

J-9.1.9 In case of other type of occupancy like commercial areas inside metro stations and combustible storage area, if any within the station, the pumping/ water requirements shall be provided as per the Table 28.

Water capacity stated in the Table 28 shall be stored in two equal and interconnected compartments. Size of the main header shall not be less than 150 mm in all cases.

Entire fire protection system shall be designed and installed as per the relevant Indian Standards.

Table 28 Water Capacity
(*Clause* J-9.1.9)

Sl No.	Area Occupied by Commercial Occupancies	Hydrant Pump Capacity	Sprinkler Pump Capacity	Jockey Pumps	Common Standby Pump	Water Capacity
	m^2	litre/min	litre/min	litre/min	litre/min	litre
(1)	(2)	(3)	(4)	(5)	(6)	(7)
i)	Up to and including 300	← 2 280 (Common pump) →		180	2 280	75 000
ii)	More than 300 and up to 1 000	← 2 850 (Common pump) →		180	2 850	100 000
iii)	More than 1 000	2 850	2 850	180 each	2 850	200 000

ANNEX K

(*Clause* 6.4.4)

FIRE AND LIFE SAFETY REQUIREMENTS FOR METRO TRAINWAYS

K-1 APPLICATION

Provisions of this annex shall apply to all portions of underground, elevated and at-grade metro trainway including tail buffer tracks and sidings not intended to be occupied by the passengers. These provisions may be amended, if required, as per the approval of the Competent Authority.

K-2 USE AND OCCUPANCY

K-2.1 Passengers shall be allowed to enter the trainway only in the case it becomes necessary to evacuate a train.

K-2.2 Passenger evacuation from train onto the trainway shall take place only under the guidance and control of authorized, trained system employee or other authorized personnel as warranted under an emergency situation.

K-2.3 Warning signs in accordance with **K-4.4.1** shall be posted at locations where unauthorized personnel might trespass.

K-3 CONSTRUCTION

K-3.1 Construction Type

K-3.1.1 *Cut and Cover*

Where trainways are to be constructed by cut and cover method, perimeter walls, base and roof slabs and other

related constructions shall be of not less than Type 1 or Type 2 or combination of Types 1 and 2 non-combustible constructions as defined in this Part. The type of construction shall be further determined by an engineering analysis of potential fire exposure hazards to the structure.

K-3.1.2 *Bored Tunnels*

Where trainway sections are to be constructed by a tunnelling method through earth, unprotected steel liners, reinforced concrete, shotcrete, or equivalent shall be permitted to be used.

K-3.1.3 *Rock Tunnels*

Where trainway sections are to be constructed by a tunnelling method through rock, steel bents with concrete liner, if lining is required, shall be permitted to be used.

K-3.1.4 *Underwater Tunnels*

Underwater tunnels shall be not less than Type 2 constructions.

K-3.1.5 *Mid Tunnel Ventilation Shaft and Trainway Exit structures*

Mid tunnel ventilation shafts and trainway emergency egress or access stairs shall not be less than Type 1 construction.

K-3.1.6 *At-Grade Construction*

Materials used for at-grade construction shall not be less than Type 2 materials. The type of construction shall be further determined by an engineering analysis of potential fire exposure hazards to the structure.

K-3.1.7 *Elevated Viaduct or Portals*

All elevated structures necessary for trainway support and all structures and enclosures on or under the trainway shall be of not less than Type 1 or Type 2 or combination of Type 1 and Type 2 construction. The type of construction shall be further determined by an engineering analysis of potential fire exposure hazards to the structure.

K-3.2 Protection against Intrusion of Flammable and Combustible Liquids and Flooding of Enclosed Trainway

Any structure including emergency egress or access stairs or vent or fan shaft structure utilized for ventilation of underground system shall be permitted to be terminated at grade, provided that the level at which it is terminated is at least 450 mm above the surrounding ground level/footpath level.

K-3.3 Compartmentation

K-3.3.1 Ancillary areas shall be separated from trainway areas within underwater trainway sections by construction having a minimum 180 min fire resistance rating.

K-3.3.2 Ancillary areas shall be separated from trainway areas within enclosed trainway sections by construction having a minimum 120 min fire resistance rating.

K-3.4 Combustible Components

Where combustible components not specifically mentioned here are installed in a trainway, a fire hazard analysis shall be conducted to determine that the level of occupant fire safety is not adversely affected by the contents.

K-3.5 Walking Surfaces

Walking surfaces designated for evacuation of passengers shall be constructed of non-combustible materials.

K-4 EMERGENCY EGRESS

K-4.1 Location of Egress Routes

K-4.1.1 The system shall incorporate a walking surface or other approved means for passengers to evacuate a train at any point along the trainway so that they can proceed to the nearest station or other point of safety.

K-4.1.2 Walkway continuity shall be maintained at special track sections like cross over or pocket tracks. Walkway continuity shall be provided by cross walks at track level.

K-4.1.3 Within enclosed trainways, the maximum distance between emergency exits/exit stairways shall not exceed 750 m.

K-4.1.4 For trainways in twin bore tunnels or trainways in a tunnel divided by a minimum 120 min fire rated wall separation, cross-passageways shall be permitted to be used *in-lieu* of emergency exit stairways.

K-4.1.5 Where cross passageways are utilized *in-lieu* of emergency exit stairways, the following requirements shall apply:

a) First cross-passageway shall be provided not farther than 500 m from the end of platform of an enclosed station or from the tunnel portal or from a mid-tunnel exit way.

b) Distance between any two cross-passageways shall not be more than 250 m.

c) The crossover in an enclosed trainway shall be considered as cross-passageway. The distance between crossover and subsequent cross-passageway shall not be more than 250 m.

d) Cross-passageways shall be separated from each trainway with separate self-closing fire door assemblies having a fire protection rating of minimum 90 min.

e) A tenable environment shall be maintained in the portion of the trainway that is not involved in an emergency and that is being used for evacuation.

f) A ventilation system for the incident trainway shall be designed to control smoke in the vicinity of the passengers.

g) Provisions shall be made for evacuating passengers *via* the non-incident trainway to a nearby station or other emergency exit.

h) The provisions shall include measures to protect passengers evacuating from non-incident tunnel from oncoming traffic and from other hazards.

j) Where cross-passageways are used *in-lieu* of emergency exit stairways, the interior of the cross-passage shall not be used for any purpose other than as an area of refuge or for access/egress to the opposite tunnel, except for installation of non-combustible equipment inside the cross passageways, provided that such equipment does not infringe the required clear space of the cross-passage.

K-4.1.6 *Level of Cross Passage*

The level of cross-passage inside the tunnel shall be designed in accordance to the following requirements:

a) In trainways where passengers have to walk on the track bed during evacuation, the floor of the cross-passages in such trainways shall be kept close to the level of the track bed. The maximum permitted level difference between the level of track bed and the floor of the cross passage shall be 250 mm. Further, a smooth surface for transition of level difference shall be provided at such cross-passages.

b) In trainways where passengers have to walk on a walkway mounted at the level of the train floor during evacuation, the floor of the cross-passages in such trainways shall be kept in level with the walkway. Further, such walkways shall always be provided on the cross-passageway side of the trainway for unobstructed access to the cross-passageway.

K-4.1.7 For open-cut trainways, an engineering analysis shall be conducted to evaluate the impact of the trainway configuration on safe egress from a train fire to a point of safety.

K-4.1.8 Where the engineering analysis indicates that the configuration will impact tenability beyond the immediate vicinity of the fire, egress routes shall be provided such that the maximum distance from any point within the open-cut section to a point of egress from the trainway shall not be more than 380 m.

K-4.1.9 All the distances mentioned in **K-4.1.3**, **K-4.1.5** and **K-4.1.8** shall be permitted with a maximum variation of $^{+10}_{0}$ percent.

K-4.2 Size of Egress Routes

K-4.2.1 Cross-passageways shall be a minimum of 1 200 mm in clear width and 2 100 mm in height.

K-4.2.2 The width of exit stairs shall not be required to exceed 1 200 mm for enclosed trainways.

K-4.2.3 If double leaf doors wider than 1 200 mm are provided in egress routes serving trainways, then size of active leaf shall not be less than 810 mm.

K-4.3 Egress Components

K-4.3.1 Walking surfaces serving as egress routes within guide ways shall have a uniform, slip-resistant design except as permitted herein.

a) Where the trainway track bed serves as the emergency egress pathway, it shall be nominally level and free of obstructions.

b) Walkways that are more than 750 mm above the floor or grade below shall be provided with a continuous handrail along the side opposite the trainway.

c) Raised walkways that are greater than 1 200 mm wide and located between two trainways shall not be required to have a handrail.

d) Doors in the means of egress, except cross-passageway doors, shall open in the direction of exit travel.

e) Doors in the means of egress shall,

   1) open fully when a force not exceeding 220 N is applied to the latch side of the door, and

   2) be adequate to withstand positive and negative pressures caused by passing trains and the emergency ventilation system.

K-4.3.2 Horizontal sliding doors shall be permitted in cross-passageways.

K-4.4 Signage, Illumination and Emergency Lighting

K-4.4.1 Warning signs posted on entrances to the

trainway and on fences or barriers adjacent to the trainway shall clearly state the hazard (for example, DANGER. HIGH VOLTAGE — 25 000 V) with letter sizes and colours in conformance with requirements of *Metro Railway Rules*.

K-4.4.2 System egress points shall be illuminated.

K-4.4.3 Points of exit from elevated and enclosed trainways shall be marked with internally or externally illuminated signs.

K-4.4.4 *Identification*

Emergency exit facilities shall be identified and maintained to allow for their intended use.

K-4.4.5 Enclosed trainways greater in length than the minimum length of one train shall be provided with directional signs as appropriate for the emergency procedures developed for the metro system.

K-4.4.6 Directional signs indicating station or portal directions shall be installed at maximum 25 m intervals on either side of the enclosed trainways.

K-4.4.7 Directional signs shall be readily visible by passengers for emergency evacuation.

K-5 FIRE PROTECTION AND LIFE SAFETY SYSTEMS

K-5.1 Emergency Access

K-5.1 Except as described herein, points of egress and exits from the guide way shall serve as emergency access routes.

K-5.2 If security fences are used along the trainway, access gates shall be provided in security fences.

K-5.3 Access gates shall be a minimum 1 200 mm wide and shall be of the hinged or sliding type.

K-5.4 Access gates shall be placed as close as practicable to the portals to permit easy access to tunnels.

K-5.5 Information that clearly identifies the route and location of each gate shall be provided on the gates or adjacent thereto.

K-5.6 Access to the elevated trainway shall be from stations or by mobile ladder equipment from roadways adjacent to the track way.

K-5.7 If no adjacent or crossing roadways exist for the elevated trainway, access roads at a maximum of 750 m intervals shall be required.

K-5.8 Where the configuration of an open-cut trainway prevents or impedes access for firefighting, provisions shall be made to permit fire fighter access to that section of trainway at intervals not exceeding 750 m.

K-5.9 All the distances mentioned in **K-5.7** and **K-5.8** above shall be permitted with a maximum variation of $^{+10}_{0}$ percent.

ANNEX M

(*Clause* 6.1.3)

FIRE PROTECTION CONSIDERATIONS FOR VENTING IN INDUSTRIAL BUILDINGS

M-1 APPLICATION

M-1.1 The provisions given below are applicable only to single storey industrial buildings (factories and storage buildings) covering large floor areas without sub-dividing/separating walls which are usually designed to meet modern production methods.

M-1.2 The requirements of fire and explosion venting of industrial buildings, as dealt with in this section, fall under two categories:

a) Smoke and fire venting, and

b) Explosion relief vents.

M-2 SMOKE AND FIRE VENTING

M-2.1 The basic considerations for formulating the design and other requirements for smoke and fire vents are as given in **M-2.1.1** to **M-2.1.20**.

M-2.1.1 The smoke and hot combustion products from a fire, being lighter than the surrounding air, tend to rise, and on reaching the roof or ceiling spread out (mushroom) on all sides and form a layer which floats on top of the cold air beneath. In the absence of vents, this layer becomes progressively deeper until the whole building is filled with hot smoky gases. The time consumed for this to happen may be only a few minutes, depending on variables like, type of materials on fire, process/storage conditions involved, etc.

M-2.1.2 The hot gases at the roof level moved by convection currents contribute to rapid lateral spread of fire.

M-2.1.3 The provision of properly designed and suitably located vents in adequate number helps the speedy removal of smoke and hot gases, thereby preventing spread of fire, besides reducing risks of explosion of unburnt gases and reducing damage to the contents and structure of the building by heat and smoke. In addition, they facilitate firefighting operations, and minimise personal hazards to the firemen.

M-2.1.4 The time taken for accumulation of smoke and hot gases within a building on fire being very short, the venting devices installed shall be designed to operate in the early stage of the fire and must be automatic so as to ensure speed and efficiency in their operation.

M-2.1.5 The smoke and fire venting system shall be designed in such a manner as to keep the temperature of the combustion products from the fire as low as possible, preferably below approximately 150°C.

M-2.1.6 Automatic venting systems are complementary to the fire extinguishing systems, and automatic sprinklers, where provided, should operate before the operation of the vents; otherwise, venting may delay sprinkler operation.

M-2.1.7 It is easier to vent a building of smoke than clear it of smoke once it has been filled.

M-2.1.8 Venting is particularly desirable in large area industrial buildings or warehouses, windowless buildings, underground structures or in areas housing hazardous operations. Automatic fire vents shall be provided for all industrial occupancies (including storage buildings) classified as medium hazard or above having floor areas exceeding 750 m^2, irrespective of whether they are compartmentalized or not.

M-2.1.9 These provisions do not cover other aspects, of ventilation (or lighting) designed for regulation of temperature within a building for personal comfort or meeting process needs.

M-2.1.10 Similarly, fire and smoke venting requirements as given here under are also not applicable to multi-storeyed buildings, as their requirements are different and more complex.

M-2.1.11 It is difficult to determine precise venting requirements on account of the many variables involved. For instance, the rate of combustion varies appreciably according to the nature, shape, size and packaging of the combustible materials as well as the size, height and disposition of the stacks of materials.

M-2.1.12 In industrial buildings of floor area less than 750 m^2 and used as low fire hazard occupancies, conventional ventilators fitted high up near the eaves of the external walls may serve as vents for smoke and hot gases, provided care is taken to ensure that they are kept open at all times or are designed to open automatically in case of fire.

M-2.1.13 Extinction of fires by closing the doors and windows is not likely in the case of industrial buildings because of their large size, where sufficient air to sustain the fire at least in the initial stages can be expected to be present.

M-2.1.14 Of the two types of building ventilation, namely, vertical and horizontal, vertical ventilation is the one commonly adopted in the case of single storey industrial buildings.

M-2.1.15 Since 70 to 80 percent of heat produced in a fire is convective heat, the ventilation system has to be suitably designed to ensure early outflow of the heat and thereby minimise fire spread.

M-2.1.16 Combustible roof linings shall be avoided, as they themselves will contribute to the spread of fire, thereby multiplying the venting problems.

M-2.1.17 A wind blowing across a flat roof or a roof with a pitch under 40° produces a negative pressure, that is, it tends to draw gases out of the building and so aids venting of hot gases. Wind blowing across a roof of pitch greater than 40° will draw gases out on the leeward side, but oppose outward flow on the windward side of the roof.

M-2.1.18 For vents to work at full efficiency, the area of the inlets for cold air entering the compartment must equal at least the total area of the vents. Ideally, the inlets shall be as close to the ground as possible.

M-2.1.19 Where roof vents are installed in a single-storey building any neighbouring buildings, particularly those of more than one storey, will be subject to some degree of exposure hazard either from flying birds or radiation, or both, as a result.

M-2.1.20 If vents are to be installed, the size, design, number and disposition of the vents and the associated roof screens/curtain boards have to be assessed after careful analysis of the various factors stated under **M-2.1.11**, as well as other related factors like type of building construction, nature and height of roof, process hazards, exposure hazard, etc.

M-2.2 Venting Area

M-2.2.1 The estimated requirements for ventilation are largely based on the assumed build-up of the fire from the time of initial outbreak to the time of effective fire fighting action by fire brigade.

M-2.2.2 The vent area required to be provided shall be approximately proportional to the perimeter of the fire area, because the entrained air forms the bulk of the vented gases.

M-2.2.3 The effective area shall be the minimum cross-sectional area through which the hot gases must flow out to the atmosphere.

M-2.2.4 No consideration shall be given to the increased air movement obtained by power operated fans, since it must be assumed that in the event of fire, power will be interrupted, or fans damaged by heat.

M-2.2.5 The total vent areas to be provided shall be as per the following ratios of effective area of vent openings to floor area for various occupancy classifications indicated:

a) Low heat release content (Sub-division G-1) — 1 : 150

b) Moderate heat release content (Sub-division G-2) — 1 : 100

c) High heat release content (Sub-division G-3) — 1 : 30 to 1 : 50

M-2.3 Types of Vents

M-2.3.1 Venting shall be accomplished by any of the types such as monitors continuous gravity vents, until type vents or sawtooth roof skylights.

M-2.3.2 Where monitor type vents are installed, wire glass or metal panels shall be used only if the sash is arranged to open automatically.

M-2.3.3 The use of plain thin glass for venting shall be avoided on account of its unpredictable behaviour during fire. However, if glass or other suitable plastic sheet materials with early disintegration characteristics are used, they should be designed for automatic operation.

M-2.3.4 Where monitors or unit type vents are used, the panels shall be hinged at the bottom and designed to open automatically. Both sides of the vents shall be designed to vent simultaneously to ensure that their effectiveness at the time of fire is not in any way impeded by wind direction.

M-2.3.5 Where movable shutters are provided for continuous gravity vents, these shall open automatically in the event of fire.

M-2.3.6 Unit type vents shall be of relatively small area, ranging between 1 m^2 and 9 m^2, having light weight metal frames and housing with hinged dampers which shall be designed for both manual and automatic operation.

M-2.3.7 Sawtooth roof skylight shall be considered as satisfactory for venting purposes only when designed for automatic operation.

M-2.3.8 Likewise, exterior wall windows shall not be reckoned as satisfactory means for venting of fire gases and smoke in industrial buildings. However, they may be reckoned as additional means of venting when, they are located close to the eaves and are provided with ordinary glass or movable sash arranged for both manual and automatic operation.

M-2.3.9 Baffles shall not be installed inside vents, as they greatly reduce the effective area for venting.

M-2.4 Vent Operation

M-2.4.1 The vents shall be automatic in operation, unless where specified in these provisions that they shall be designed for both manual and automatic operation.

M-2.4.2 The release mechanism shall be simple for operation and independent of electrical power, since electrical services may be interrupted by fire.

M-2.4.3 The automatic operation of vents shall be achieved by actuation of fusible links or other types of heat and smoke detectors, or by interlocking with operation of sprinkler system or any other automatic fire extinguishing system covering the area. Following their release, the vents shall be designed to open by a system of counterweights and associated equipment utilizing the force of gravity or spring loaded levers.

M-2.4.4 Automatic fire alarm system, where installed, shall be coupled to the automatic vents to ensure simultaneous operation.

M-2.4.5 Automatic sprinklers, where installed, shall operate before the vents open order to avoid any likely delay in sprinkler operation. However, heat actuated devices used for vent release shall be suitably shielded from sprinkler discharge so that water does not delay their action. Further, provision of operating the vents manually may also be provided.

M-2.4.6 Premises where height of roof apex is 10 m or more or where the materials handled or stored have high smoke producing characteristics, in addition to fusible links, the vent release mechanism shall be interlinked to smoke actuated automatic fire detectors to ensure early operation of vents.

M-2.4.7 Non-corrosive materials shall be used for hinges, hatches and other related parts to ensure long fail-safe operation of the vents.

M-2.4.8 In case of any doubts regarding the types of vents required to be installed for any particular occupancy, authorities having jurisdiction shall be consulted.

M-2.5 Size, Spacing and Disposition of Vents

M-2.5.1 Vents shall be correctly sited to ensure their functional efficiency. Ideally, they shall be sited at the highest point in each area to be covered.

M-2.5.2 They shall, as far as possible, be located immediately above the risk to be protected so as to allow free and speedy removal of smoke and other combustion products in the event of fire.

M-2.5.3 The minimum dimension for an effective vent opening shall be not less than 1.25 m in any direction.

M-2.5.4 The spacing of the individual vent shall be based on the principle that more number of well distributed smaller vents are more effective than fewer number of badly located larger vents.

M-2.5.5 The maximum spacing between vents for the three occupancy classifications shall be as follows:

a)	Low heat release content	: 45 m between centres
b)	Moderate heat release content	: 36 to 37 m between centres
c)	High heat release content	: 22.5 to 30 m between centres, depending on the severity of fire potential.

M-2.5.6 Vents shall be placed in a sheltered situation where advantage can be taken of the prevailing wind. The design of the vent shall be such as to produce a suction effect. A wind blowing across a flat roof or one with a pitch of 40° produces a negative pressure, that is, it tends to draw gases out of the building and so aids venting of hot gases. Wind blowing across a roof of pitch greater than 40° will draw gases out of the leeward side, but oppose outward flow on the windward side of the roof.

M-2.5.7 Low level inlets, with total area not less than the total area of vents, shall be provided to permit outside air to be drawn in to aid automatic venting. These inlets, which may be in the form of doors, windows or such other openings, shall be designed for manual operation when desired.

M-2.6 Roof Screens or Curtain Boards

M-2.6.1 Industrial buildings with large areas and having no subdivision/separating walls limiting the area of individual compartments to 750 m^2 or less, shall be provided with roof screens or curtain boards.

These screens which extend from the roof downwards at specific intervals not only prevent lateral spread of heat and smoke in the event of fire below, but substantially assist in early operation of automatic sprinklers and vents.

M-2.6.2 They shall be of sheet metal or any other substantially non-combustible material strong enough to withstand damage by heat or impact.

M-2.6.3 They shall be reasonably gas-tight, although small openings for passage of pipes, conduits, etc, shall be permitted.

M-2.6.4 They shall extend down from the roof/ceiling for a minimum depth of 2.2 m. Around specific hazards, the depth shall be 4 m. Where roof/ceiling height exceeds 15 m they shall extend down to within 3 m of the floor. For pitched sawtoothed roofs, they shall extend down to truss level dividing the roof into compartments.

M-2.6.5 In moderate hazard occupancies, the distance between the screens/curtain boards shall not exceed 75 m and the curtained areas shall be limited to a maximum of 4 500 m^2.

M-2.6.6 In high hazard occupancies, the distance between screens shall not exceed 30 m and the curtained area shall be limited to 750 m^2.

M-2.6.7 The curtained roof area shall be so arranged that they effectively aid in the venting of smoke and hot gases through the automatic vents provided in each area.

M-2.6.8 In sprinklered buildings, the screens shall preferably be so located as to coincide with the individual sprinkler system areas.

M-3 EXPLOSION RELIEF VENTS

M-3.1 Industrial premises where combustible dusts can accumulate or where flammable gases, vapours or mists in explosive concentrations may be present are constantly exposed to explosion hazards. Pressures developed by such explosions may be of the order of 7×10^5 Pa and ordinary buildings will not be able to withstand the shock of such pressures. Hence, such buildings require explosion relief vents for preventing structural damage.

M-3.2 Basic Principle/Considerations

M-3.2.1 Most ordinary building walls will not withstand a sustained internal pressure as great as 6.9×10^3 Pa. Hence, explosion relief vents for buildings must be designed to operate at pressures well below those at which the building walls will fail.

M-3.2.2 There is a rise in pressure during an explosion within an enclosure even with open, unobstructed vents, and any delay in opening the venting devices increases that pressure.

M-3.2.3 Structural damage can be minimised by locating hazardous operations or equipment outside buildings and cut-off from other operations by a pressure resisting wall. Such isolated processes or equipment shall be housed in single-storey buildings properly vented and a device provided at the inlet of the collector which will prevent an explosion from blowing back through the duct work and into the building.

M-3.2.4 Where highly hazardous operations cannot be located outside of main buildings they shall be segregated by pressure resisting walls and each such unit shall be ventilated outdoors. External walls may be of heavy construction, if equipped with suitable vents or high weight panels which blow out easily.

M-3.2.5 Operations or equipment involving explosion hazards shall not be permitted in basements or areas partially below grade.

M-3.2.6 Fire can be expected to follow an explosion in most occupancies, so that any fixed fire extinguishing equipment, like sprinklers, if installed, shall be such that only the minimum damage is caused to it.

M-3.2.7 For a given material, the finer the particle size of the dust, the more violent is the explosion. Some materials, such as aluminium powder, hydrogen, and acetylene, are difficult to vent effectively due to the rapid rate of pressure rise. Some slow burning materials, such as coal dust in a confined space, may do much damage because of the longer duration of their presence. Some dusts, such as magnesium, titanium and zirconium and several metal hydrides may react with and ignite in some common inert gases, such as nitrogen and carbon dioxide.

M-3.2.8 The maximum explosion pressure in a vented structure decreases as the size of the vent increases, but is independent of the rupturing pressure of a diaphragm.

M-3.2.9 The most effective vent for the release of explosion pressures is an unobstructed vent opening.

M-3.2.10 Pressure required to rupture diaphragms of the same area and material directly varies with the thickness of the material.

M-3.2.11 The slower the rate of pressure rise, the more easily can the explosion be vented.

M-3.2.12 The degree of venting required is directly proportional to the degree of explosion hazard.

M-3.2.13 Experience has shown that most explosions of dusts, vapours and gases do not involve a large part of the total volume of the enclosure, and frequently occur near the upper or lower limits of the explosive range. Consequently, such explosions are relatively weak compared with the optimum.

M-3.2.14 Rectangular unrestricted vents are as effective as square vents of equal area.

M-3.3 Types of Explosion Relief Vents

M-3.3.1 The explosion relief vents shall be any one or more of the following types, depending on individual requirements as assessed by the Authority. Open or unobstructed vents, louvres, open roof vents, hanger type doors, building doors, windows, roof or wall panels or movable fixed sash.

M-3.3.2 The effect or external wind pressure or suction on these devices shall be taken into consideration while designing and selecting the type of vents, since wind pressures may reach over 2×10^5 Pa in severe wind storms.

M-3.3.3 The type of vent for explosion relief for any occupancy shall be selected with life safety as the primary aim followed by minimum damage to property.

M-3.3.4 Where large hanger type doors of metal curtain doors in side walls are used as vents, care shall be taken to ensure that they are kept wide open during operations.

M-3.3.5 Where weather hoods are used to cover roof vents, they shall be as light as possible and lightly attached so as to enable them to be blown off quickly when an explosion occurs.

M-3.3.6 Doors and windows when used as explosion vents shall be installed to swing outwards. Doors shall have friction, spring or magnetic latches that will function automatically to permit the door to open under slight internal pressure.

M-3.3.7 Movable sash shall be of the top or bottom hinged or protected type. These shall be equipped with a latch or friction device to prevent accidental opening due to wind action or intrusion. Such latches or locks shall be well maintained.

M-3.3.8 Fixed sash shall be set in place with very light wall anchorages, or, if tight, shall be securely fitted and glazed with plastic panes in plastic putty.

M-3.3.9 Where the process is such that the whole of a building or a room may be desirable to arrange for a lightly constructed wall or roof to collapse and thus avert the worst effects of an explosion.

M-3.4 Design, Size and Disposition of Vents

M-3.4.1 The required area of explosion vents shall ordinarily depend on the expected maximum intensity of an explosion in the occupancy, the strength of the structure, the type of vent closure and other factors.

M-3.4.2 Venting shall be planned in such a manner as to prevent injury to personnel and damage to exposure.

In congested locations, substantial ducts or diverters shall be provided to direct the blast.

M-3.4.3 When ductwork is used, the ducts shall be of sufficient strength to withstand the maximum expected explosion pressure.

M-3.4.4 Where explosions are likely within duct and piping systems, they shall be vented by the use of suitable diaphragms designed to blow out at a predetermined pressure. There shall be no physical connection between ductwork system for more than one collector.

M-3.4.5 In large structures, the position of vents shall be relative to the point of origin of explosion, when it can be determined.

M-3.4.6 Where relatively slow explosions involving coal dust, chlorinated solvents, etc, are involved, light, hinged swinging panels may be preferred to diaphragm type of vents.

M-3.4.7 Obstructions of any kind blocking the vents from the risk covered shall be avoided, particularly where risks of rapid violent explosions are present.

M-3.4.8 Counter weights add to the inertia of the vents and so shall be avoided.

M-3.4.9 Various relieving devices, including devices actuated by detonators, shall start to open at as low a pressure as possible. They shall be of light construction, so that full opening can be quickly attained.

M-3.4.10 Vents shall be of such size and design as to prevent rupture of the protected device or apparatus.

M-3.4.11 Skylights or monitors with movable sash that will open outwards, or fixed sash containing panes of glass or plastic that will blow out readily under pressure from within, can be used to supplement wall vents or windows, provided resistance to their displacement or opening is kept as low as consistent with the requirements for structural strength.

M-3.4.12 Flexible plastic sheets when used for vent closures shall be installed in slotted frames in such a way that pressure from within bulges the sheets and releases them from the holding frame.

M-3.4.13 Fragile sheets made of plastic, when used for vent closures, shall be thin sheets that will crack or rupture under less pressure than single strength glass. For this reason use of transparent or translucent plastic sheets is more advantageous than use of glass in window sash.

M-3.4.14 If closed vents are used they shall be larger in area than unenclosed vents to provide equivalent explosion pressure relief.

M-3.4.15 Small enclosures, such as machines, shall be vented more generously than buildings, because if an explosion occurs in a machine, its entire volume may be involved.

M-3.4.16 Vents for the protection of buildings and equipment shall be installed on the following basis:

a) Small enclosures of less than 30 m^3, machines and ovens of light construction: 1 000 cm^2 for each 0.3 m^3 to 0.9 m^3.

b) For small enclosures of more substantial construction having reasonably high bursting strength: 1 000 cm^2 for each 0.9 m^3.

c) Fairly large enclosures of 30 to 700 m^3, such as bins, silos, rooms, storage tanks, etc: 1 000 cm^2 for each 0.9 m^3 to 1.5 m^3. In these cases, attempt shall be made to the extent possible to predict the likely point of origin of the explosion in relation to the vent.

d) Large rooms and buildings over 700 m^3 containing hazardous equipment comprising a small fraction of the entire volume:

   1) For heavy reinforced concrete, walls: 100 cm^2 for each 2.25 m^3.
   2) For light reinforced concrete, brick or wood construction: 1 000 cm^2 for each 1.65 m^3 to 2.25 m^3.
   3) For lightweight construction such as prefabricated panels: 1 000 cm^2 for each 1.5 m^3 to 1.65 m^3.

e) Large rooms or building over 700 m^3 containing hazardous equipment comprising a large part of the entire volume of a room or building shall be vented as generously as possible: 1 000 cm^2 for each 0.3 m^3 to 1.05 m^3.

f) In order to obtain these ratios, the size of the building or room must be limited. For some hazardous materials, such as hydrogen, acetylene, carbon disulphide, etc, these limits are extremely low.

g) Emphasis shall always be placed on segregating hazardous areas by means of firewalls or separating walls to prevent spread of fire.

h) Interior walls of light construction, such as tile, shall be avoided in hazardous locations, since they can cause injuries to personnel in the event of an explosion.

LIST OF STANDARDS

The following list records those standards which are acceptable as 'good practice' and 'accepted standards' in the fulfillment of the requirements of the Code. The latest version of a standard shall be adopted at the time of enforcement of the Code. The standards listed may be used by the Authority for conformance with the requirements of the referred clauses in the Code.

In the following list, the number appearing in the first column within parentheses indicates the number of the reference in this Part.

	IS No.	*Title*
(1)	3808 : 1979	Method of test for non-combustibility of building materials (*first revision*)
(2)	IS/ISO 834-1 : 1999	Fire resistance tests — Elements of building construction Part 1 General requirements
	IS/ISO 834-4 : 2000	Fire resistance tests — Elements of building construction: Part 4 Specific requirements for load bearing vertical separating elements
	IS/ISO 834-5 : 2000	Fire resistance tests — Elements of building construction: Part 5 Specific requirements for load bearing horizontal separating elements
	IS/ISO 834-6 : 2000	Fire resistance tets — Elements of building constructions: Part 6 Specific requirements for beams
	IS/ISO 834-7 : 2000	Fire resistance tests — Elements of building construction: Part 7 Specific requirements for columns
	IS/ISO 834-8 : 2003	Fire resistance tests — Elements of building construction: Part 8 Specific requirements for non-load bearing vertical separating elements
	IS/ISO 834-9 : 2003	Fire resistance tests — Elements of building construction: Part 9 Specific requirements for non-load bearing ceiling elements
(3)	8757 : 1999	Glossary of terms associated with fire safety (*first revision*)
	7673 : 2004	Glossary of terms for fire fighting equipment (*first revision*)
(4)	8758 : 2013	Code of practice for fire precautionary measures in construction of temporary structures and pandals (*second revision*)
(5)	9668 : 1990	Code of practice for provision and maintenance of water supplies and fire fighting
	3844 : 1989	Code of practice for installation and maintenance of internal fire hydrants and hose reels on premises (*first revision*)
(6)	1646 : 2015	Code of practice for fire safety of buildings (general) : Electrical installations (*third revision*)
(7)	9457 : 2005	Code of practice for safety colours and safety signs (*first revision*)
	12349 : 1988	Fire protection — Safety sign
	12407 : 1988	Graphic symbols for fire protection plans
(8)	11360 : 1985	Specification for smoke detectors for use in automatic electrical fire alarm system
(9)	655 : 2006	Specification for air ducts
(10)	1649 : 1962	Code of practice for design and construction of flues and chimneys for domestic heating appliances (*first revision*)
	1642 : 2013	Code of practice for safety of buildings (general): Details of construction (*second revision*)
(11)	12777 : 1989	Method for classification of flame spread of products
(12)	1642 : 2013	Code of practice for safety of buildings (general): Details of construction (*second revision*)
(13)	16246 : 2015	Elastomer insulated cables with limited circuit Integrity when affected by fire — Specification
(14)	6044 (Part 1) : 2013	Liquefied petroleum gas storage installations — Code of Practice : Part 1 Residential commercial and industrial cylinder installations
	6044 (Part 2) : 2001	Code of Practice for liquefied petroleum gas storage installations: Part 2 Commercial, industrial and domestic bulk storage installations
(15)	2175 : 1988	Specification for heat sensitive fire detectors for use in automatic fire alarm system (*second revision*)
	IS/ISO 7240-5 : 2003	Fire detection and alarm systems: Part 5 Point-type heat detectors
	IS/ISO 7240-7 : 2011	Fire detection and alarm systems: Part 7 Point-type smoke detectors using scattered light, transmitted light or ionization

IS No.	Title
IS/ISO 7240-11 : 2011	Fire detection and alarm systems: Part 11 Manual call points
IS/ISO 7240-15 : 2004	Fire detection and alarm systems: Part 15 Point-type fire detectors using scattered light, transmitted light or ionization sensor in combination with a heat sensor
11360 : 1985	Specification for smoke detectors for use in automatic electrical fire alarm system
(16) 2189 : 2008	Code of practice for selection, installation and maintenance of automatic fire detection and alarm system (*second revision*)
(17) 636 : 1988	Specification for non-percolating flexible fire fighting delivery hose (*third revision*)
884 : 1985	Specification for first-aid hose reel for fire fighting(*first revision*)
901 : 1988	Specification for couplings, double male and double female instantaneous pattern for fire fighting (*third revision*)
902 : 1992	Specification for suction hose couplings for fire fighting purposes (*third revision*)
903 : 1993	Specification for fire hose delivery couplings, branch pipe, nozzles and nozzle spanner (*fourth revision*)
904 : 1983	Specification for two-way and three-way suction collecting heads for fire fighting purposes (*second revision*)
905 : 1980	Specification for delivery breechings, dividing and collecting, instantaneous pattern for fire fighting purposes (*second revision*)
906 : 1988	Specification for revolving branch pipe for fire fighting (*third revision*)
907 : 1984	Specification for suction strainers, cylindrical type for fire fighting purpose (*second revision*)
908 : 1975	Specification for fire hydrant, stand post type (*second revision*)
909 : 1992	Specification for underground fire hydrant : Sluice valve type (*third revision*)
910 : 1980	Specification for combined key for hydrant, hydrant cover and lower valve (*second revision*)

IS No.	Title
926 : 1985	Specification for fireman's axe (*second revision*)
927 : 1981	Specification for fire hooks (*second revision*)
928 : 1984	Specification for fire bells (*second revision*)
937 : 1981	Specification for washers for water fittings for fire fighting purposes (*second revision*)
939 : 1977	Specification for snatch block for use with fibre rope for fire brigade use (*first revision*)
941 : 1985	Specification for blowers and exhauster for fire fighting (*second revision*)
942 : 1982	Functional requirements for 275 l/min portable pump set for fire fighting (*second revision*)
943 : 1979	Functional requirement for 680 l/min trailer pump for fire brigade use (*second revision*)
944 : 1979	Functional requirement for 1800 l/min trailer pump for fire brigade use (*second revision*)
947 : 1985	Functional requirement for towing tender for trailer fire pump for fire brigade use (*first revision*)
948 : 1983	Functional requirement for water tender, Type A, for fire brigade use (*second revision*)
949 : 2012	Functional requirement for emergency (rescue) tender (*third revision*)
950 : 2012	Functional requirements for water tender, Type B for fire brigade use (*third revision*)
952 : 1986	Specification for fog nozzle for fire brigade use (*second revision*)
955 : 1980	Functional requirements for dry power tender for fire-brigade use (150 kg capacity) (*first revision*)
957 : 1967	Specification for control van for fire brigade
1941 (Part 1) : 1976	Functional requirements for electric motor sirens : Part 1 AC, 3-Phase, 50 Hz, 415 volts type (*second revision*)
2097 : 2012	Specification for foam making branch pipe and foam inductor (*second revision*)
2175 : 1988	Specification for heat sensitive fire detectors for use in automatic detectors for use in automatic fire alarm system (*second revision*)
2546 : 1974	Specification for galvanized mild steel fire bucket (*first revision*)

IS No.	Title
2696 : 1974	Functional requirements for 1125 l/min light fire engine (*first revision*)
2745 : 1983	Specification for non-metal helmet for firemen and civil defence personnel (*second revision*)
2871 : 2012	Specification for branch pipe, universal for fire fighting purposes (*second revision*)
2878 : 2004	Specification for fire extinguisher, carbon-dioxide type (portable and trolley mounted) (*third revision*)
2930 : 1980	Functional requirements for hose laying tender for fire brigade use (*first revision*)
3582 : 1984	Specification for basket strainers for fire fighting purposes (cylindrical type) (*first revision*)
4308 : 2003	Specification for dry chemical powder for fire fighting B and C class fires (*second revision*)
4571 : 1977	Specification for aluminium extension ladders for fire brigade use (*first revision*)
4643 : 1984	Specification for suction wrenches for fire brigade use (*first revision*)
4861 : 1984	Specification for dry powder for fighting fires in burning metals (*first revision*)
4927 : 1992	Specification for unlined flax canvas hose for fire fighting (*first revision*)
4928 : 1986	Specification for delivery valve for centrifugal pump outlets (*first revision*)
4947 : 2006	Specification for gas cartridges for use in fire extinguishers (*third revision*)
4989 : 2006	Foam concentrate for producing mechanical foam for fire fighting — Specification (*third revision*)
4989 (Part 4) : 2003	Specification for multipurpose aqueous film forming foam liquid concentrate for extinguishing hydrocarbon and polar solvent fires
5131 : 2002	Specification for dividing breeching with control, for fire brigade use (*second revision*)
5290 : 1993	Specification for landing valve (*third revision*)

IS No.	Title
5486 : 1985	Specification for quick release knife (*first revision*)
5505 : 1985	Specification for multi-edged rescue axe (non-wedging) (*first revision*)
5612	Specification for hose-clamps and hose-bandages for fire brigade use
(Part 1) : 1977	Hose clamps (*first revision*)
(Part 2) : 1977	Hose bandages (*first revision*)
5714 : 1981	Specification for hydrant, stand-pipe for fire fighting (*first revision*)
6026 : 1985	Specification for hand operated sirens (*first revision*)
6067 : 1983	Functional requirements for water tender, Type 'X' for fire brigade use (*first revision*)
IS/ISO 7240-5 : 2003	Fire detection and alarm systems — Part 5: Point-type heat detectors
IS/ISO 7240-7 : 2011	Fire detection and alarm systems — Part 7: Point-type smoke detectors using scattered light, transmitted light or ionization
IS/ISO 7240-11 : 2011	Fire detection and alarm systems — Part 11 Manual call points
8090 : 1992	Specification for couplings, branch pipe, nozzle, used in hose reel tubing for fire fighting (*first revision*)
8096 : 1992	Specification for fire beaters (*first revision*)
8149 : 1994	Functional requirements for twin CO_2 fire extinguishers (trolley mounted) (*first revision*)
8423 : 1994	Specification for controlled percolating hose for fire fighting (*first revision*)
8442 : 2008	Specification for stand post type water and foam monitor for fire fighting (*first revision*)
9972 : 2002	Specification for automatic sprinkler heads (*first revision*)
10460 : 1983	Functional requirements for small foam tender for fire brigade use
10658 : 1999	Specification for higher capacity dry powder fire extinguisher (trolley mounted) (*first revision*)
10993 : 1984	Functional requirements for 2 000 kg dry powder tender for fire brigade use
11101 : 1984	Specification for extended branch pipe for fire brigade use

IS No.	*Title*
11108 : 1984	Specification for portable fire extinguisher halon-1211 typc
11833 : 1986	Specification for dry powder fire extinguisher for metal fires
12717 : 1989	Functional requirements of fire fighting equipment — High capacity portable pumpsct (1 100-1 600 l/min)
12796 : 1989	Specification for fire rake
13039 : 1991	Code of practice for provision and maintenance of external hydrant system
13385 : 1992	Specification for fire extinguisher 50 capacity wheel mounted watcr type (Gas cartridge)
13386 : 1992	Specification for 50 litre capacity fire extinguisher, mechanical foam type
14609 : 1999	Specification for ABC dry powder for fire fighting
14933 : 2001	Specification for high pressure fire fighting hose
14951 : 2001	Specification for fire extinguisher, 135 litre capacity mechanical foam type
15051 : 2002	Specification for high pressure fire hose delivery couplings
IS 15105 : 2002/ ISO 6182-1	Design and installation of fixed automatic sprinkler fire extinguishing system
IS 15220 : 2002/ ISO 7201-1	Specification for halon 1211 and halon 1301 — fire extinguishing media for fire protection
IS 15683 : 2006/ ISO 7165 : 2009	Portable fire extinguishers — Performance and construction — Specification
11360 : 1985	Specification for smoke detectors for use in automatic electrical fire alarm system
IS 15493 : 2004/ ISO 14520-1	Gaseous fire extinguishing systems : General requirements
IS 15505 : 2004/ ISO 14520-6	Gascous fire extinguishing systems: HCFC Blend A extinguishing systems
IS 15506 : 2004/ ISO 14520-14	Gascous fire extinguishing systems — IG 55 extinguishing systems
IS 15525 : 2004/ ISO 14520-13	Gaseous fire extinguishing systems — IG 100 extinguishing systems
IS 15501 : 2004/ ISO 14520-15	Gaseous fire extinguishing systems — IG 541 extinguishing systems
IS 15497 : 2004/ ISO 14520-12	Gascous fire extinguishing systems — IG 01 extinguishing systems
15519 : 2004	Code of practice for water mist fire protcction systems — System design. installation and commissioning
IS 15517 : 2004/ ISO 14520-9	Gaseous fire extinguishing systems — Carbon dioxide, total flooding and local application including in cabinet subfloors systems
IS 15517 : 2004/ ISO 14520-9	Gaseous fire extinguishing systems — HFC 227ea (Hepta Fluoro Propane) extinguishing system
(18) 2190 : 2010	Code of practice for selection, installation and maintenance of portable first-aid fire extinguishers (*fourth revision*)
(19) 884 : 1985	Specification for first aid hose reel for fire fighting (*first revision*)
(20) 15105 : 2002	Design and installation of fixed automatic sprinkler fire extinguishing system
(21) 15325 : 2003	Design and installation of fixed automatic high and medium velocity water spray system — Code of practice
(22) 12835 (Part 1) : 1989	Design and installation of fixed foam fire extinguishing system — Code of practice: Part 1 Low expansion foam
(23) 15528 : 2004	Gaseous fire extinguishing systems — Carbon dioxide, total flooding and local application (sub-floor and in-cabinet), high and low floor pressure (refrigerated) systems
(24) 15519 : 2004	Water mist fire protection systems — System design, installation and commission ing — Code of Practice
(25) 15493 : 2004	Gaseous fire extinguishing Systems — General requirements
15497 : 2004	Gaseous fire extinguishing systems — IG 01 extinguishing systems
15501 : 2004	Gaseous fire extinguishing systems — IG 541 extinguishing systems
15505 : 2004	Gaseous fire extinguishing systems — HCFC Blend A

IS No.	Title
15506 : 2004	Gaseous fire extinguishing systems — IG 55 extinguishing systems
15517 : 2004	Gaseous fire extinguishing systems — HFC 227 ea (Hepta fluoro propane) extinguishing systems
15525 : 2004	Gaseous fire extinguishing systems — IG 100 extinguishing systems
(26) 2189 : 2008	Code of practice for selection, installation and maintenance of automatic fire detection and alarm system (*fourth revision*)
2190 : 2010	Code of practice for selection, installation and maintenance of portable first-aid fire extinguishers (*fourth revision*)
3844 : 1989	Code of practice for installation and maintenance of internal fire hydrants and hose reels on premises (*first revision*)
9668 : 1990	Code of practice for provision and maintenance of water supplies for fire fighting
13039 : 1991	Code of practice for provision and maintenance of external hydrant system
13039 : 2014	External hydrant systems — Provision and maintenance — Code of practice
(27) 4878 : 1986	Byelaws for construction of cinema buildings (*first revision*)
(28) 2726 : 1988	Code of practice for fire safety of industrial buildings : Cotton ginning and pressing (including cotton seed delintering) factories (*first revision*)
3034 : 1993	Code of practice for fire safety of industrial buildings : Electrical generating and distributing stations (*second revision*)
3058 : 1990	Code of practice for fire safety of industrial buildings : Viscose rayon yarn and/or staple fibre plants (*first revision*)
3079 : 1990	Code of practice for fire safety of industrial buildings : Cotton textile mills (*first revision*)
3594 : 1991	Code of practice for fire safety of industrial buildings : General storage and warehousing including cold storage (*first revision*)
3595 : 1984	Code of practice for fire safety of industrial buildings : Coal pulverizers and associated equipment (*first revision*)
3836 : 2000	Code of practice for fire safety of industrial buildings : Jute mills (*second revision*)
4209 : 2013	Code of safety for chemical laboratories (*second revision*)
4226 : 1988	Code of practice for fire safety of industrial buildings : Aluminium/ Magnesium powder factories (*first revision*)
4886 : 1991	Code of practice for fire safety of industrial buildings : Tea factories (*first revision*)
6329 : 2000	Code of practice for fire safety of industrial buildings : Saw mills and wood works (*first revision*)
9109 : 2000	Code of practice for fire safety of industrial buildings : Paint and Varnish factories
11457 (Part 1) : 1985	Code of practice for fire safety of chemical industries: Part 1 Rubber and plastic
(29) 13039 : 2014	External hydrant systems — Provision and maintenance — Code of practice

NATIONAL BUILDING CODE OF INDIA

PART 5 BUILDING MATERIALS

BUREAU OF INDIAN STANDARDS

CONTENTS

FOREWORD ... 3
1 SCOPE ... 5
2 MATERIALS ... 5
3 SUSTAINABLE MATERIALS ... 5
4 NEW OR ALTERNATIVE MATERIALS ... 5
5 THIRD PARTY CERTIFICATION ... 6
6 SED MATERIALS ... 6
7 STORAGE OF MATERIALS ... 6
8 METHODS OF TEST ... 6
LIST OF STANDARDS ... 6

FOREWORD

This Code (Part 5) lists Indian Standard specifications for materials used in building construction. The Indian Standards for methods of tests, to ensure the requirements demanded of the materials in the various situations, are also included. This is with a view to ensuring the quality and effectiveness of building materials used in the construction and of their storage, which are as important as other aspects of building activity like planning, designing and constructing the building itself.

Historically, choice of building materials was determined by what was locally available, appropriateness to geo-climatic conditions and affordability of users. In the recent past, different initiatives have been taken in the areas of research and development, standardization, and development and promotion of innovative materials. A review of the recent trends indicates that the growth in the area of building materials covers emerging trends and latest developments in the use of wastes, mineral admixtures in cement and concrete, substitutes to conventional timber, composite materials and recycling of wastes, at the same time ensuring desired response of materials in relation to fire safety, long term performance and durability. In addition to these, nowadays, development of specific materials is being researched which may be structured and designed to meet needs to specially developed construction technologies in time to come, such as, for disaster prone areas or aggressive climatic and industrial situations.

To encourage use of appropriate materials, it may be desirable to have to the largest extent possible, performance oriented approach for specifications rather than prescriptive approach. The approach has been already adopted in some cases in development of standards, wherever found possible.

Indian Standards cover the requirements for most of the materials in use. However, there may be a gap between development of new materials and techniques of application and formulation of standards. It, therefore, becomes necessary for a Building Code to be flexible to recognize building materials other than those for which Indian Standards are available. This Part of the Code, therefore, since its first version, duly takes care of this aspect and explicitly provides for use of new or alternate building materials, provided it is proved by authentic tests that the new or alternative material is effective and suitable for the purpose intended. However, it is worthwhile that more and more emphasis is given to the satisfaction of performance requirements expected of a building material, so that a wide range of such new or alternate materials can be evaluated and used, if found appropriate.

As already emphasized, quality of material is quite important for their appropriate usage, whether it is a material for which an Indian Standard is available or a new or alternative material as defined in **4** of this Part of the Code. While continuing to emphasize on conformity of building materials to available Indian Standards, this Part recommends that the building regulating authority may also recognize the use of building materials conforming to other specifications and test methods (*see* **4.2**), in case Indian Standards are not available for particular materials. Third party certification schemes available in the country for quality assurance of above materials can be used with advantage to ensure the appropriateness of these materials.

It is well recognized that buildings during their construction and subsequently in their operation consume lot of resources. The holistic approach for ensuring proper and sustainable developments is to take care of the concerned aspects affecting sustainability during the conceptualization, planning, design, construction, and operation and maintenance stages. The building material production, transportation and utilization assume a substantial component of the embodied energy that goes into a building. It is therefore important that sustainability of building materials is well understood and ensured in a building project. This Part of the Code recognizes this aspect and covers appropriate provision therefore.

This Part of the Code was first published in 1970 and subsequently revised in 1983 and 2005 as Part 5 of NBC 2005. The first and second revision of this Part incorporated an updated version of the list of Indian Standards given at the end of this Part of the Code. Also the list of building materials was completely revised to make it more user-friendly. This second revision of this Part, while basically retaining the structure of 2005 version of the Code, incorporates the following modifications:

a) The clause on new/alternative materials has been extended to give examples of some potential new/ alternative materials;

b) Recognizing the importance of sustainability in building construction and built environment, a new clause giving broad aspects relating to sustainable materials, has been added;

c) The list at the end of this Part has been updated to reflect the latest available Indian Standard specifications and methods of test.

d) In the above list, existing categories have been re-organized and some new categories have been added either under the existing principal categories or as separate principal categories. In the process, the categories such as, bricks, blocks and other masonry units; mortar (including sand for mortar); supplementary cementitious materials; mesh/net for mosquito/vector prevention; concrete door and window frame; other composite material doors and windows; fire check doors; stone flooring, etc, have been added.

e) The headings of some of the categories have been rechristened to more appropriately reflect the materials/ products actually covered thereunder.

A reference to SP 21 : 2005 'Summaries of Indian Standards for Building Materials' may be useful. This publication gives the summaries of Indian Standards covering various building materials, fittings and components except standards relating to paints.

All standards cross-referred in the main text of this Part, are subject to revision. The parties to agreement based on this Part are encouraged to investigate the possibility of applying the most recent editions of the standards.

For the purpose of deciding whether a particular requirement of this Part is complied with, the final value, observed or calculated, expressing the result of a test or analysis, shall be rounded off in accordance with IS 2 : 1960 'Rules for rounding off numerical values (*revised*)'. The number of significant places retained in the rounded off value should be the same as that of the specified value in this Part.

NATIONAL BUILDING CODE OF INDIA

PART 5 BUILDING MATERIALS

1 SCOPE

This Code (Part 5) covers the requirements of building materials and components, and criteria for accepting new or alternative building materials and components.

2 MATERIALS

Every material used in fulfillment of the requirements of this Part, unless otherwise specified in the Code or approved, shall conform to the relevant Indian Standards. A list of Indian Standard specifications as the 'accepted standards' is given at the end of this Part of the Code. At the time of publication of the Code, the editions indicated were valid. All standards are subject to amendments and revisions. The Authority shall take cognizance of such amendments and revisions. The latest version of the specification shall, as far as possible, be adopted at the time of enforcement of this Part of the Code.

3 SUSTAINABLE MATERIALS

Choice of building materials is important in sustainable design because of the extensive network of activities such as extraction, processing and transportation steps required for making a material, and activities involved thereafter till building construction and even thereafter. These activities may pollute the air, soil and water, as well as destroy natural habitats and deplete natural resources. One of the most effective strategies for minimizing the environmental impacts of material usage is to reuse existing buildings. Rehabilitation of existing building, and their shell and non-shell components, not only reduces the volume of solid waste generated and its subsequent diversion to landfills but also the environmental impacts associated with the production, delivery and use or installation of new building materials. However, the use of sustainable building materials is one of the best strategies in the pursuit of sustainable buildings.

An ideal sustainable building material is not only environment friendly but also causes no adverse impact on health of occupants, is readily available, can be reclaimed and recycled, and is not only made from renewable raw material, but also uses predominantly renewable energy in its extraction, production, transportation, fixing and ultimate disposal. Practically, this kind of ideal material may not be available and hence, when selecting sustainable materials, it may be best to choose materials which fulfill most of these criteria. Sustainable building materials also offer specific benefits to the building owner and building occupants, such as, reduced maintenance/replacement costs over the life of the building; energy conservation; improved occupant health and productivity; lower costs associated with changing space configurations; and greater design flexibility.

The selection of sustainable building materials shall be made in accordance with Part 11 'Approach to Sustainability' of the Code.

4 NEW OR ALTERNATIVE MATERIALS

4.1 The provisions of this Part are not intended to prevent the use of any material not specifically prescribed under **2**. Any such material may be approved by the Authority or an agency appointed by them for the purpose, provided it is established that the material is satisfactory for the purpose intended and the equivalent of that required in this Part or any other specification issued or approved by the Authority. The Authority or an agency appointed by them shall take into account the following parameters, as applicable to the concerned new or alternative building material:

a) Requirements of the material specified/ expected in terms of the provisions given in the standards on its usage, including its applicability in geo-climatic condition;
b) General appearance;
c) Dimension and dimensional stability;
d) Structural stability including strength properties;
e) Fire safety;
f) Durability;
g) Thermal properties;
h) Mechanical properties;
j) Acoustical properties;
k) Optical properties;
m) Biological effect;
n) Environmental aspects;
p) Working characteristics;
q) Ease of handling;
r) Consistency and workability;
s) UV resistance; and
t) Toxicity.

Some of such new alternative materials may be ferrocement decorative concrete, polymer concrete, micro-concrete repair materials, dry-mix mortar, non-shrink grout, optical fibres, special materials for bunkers blast resistant structures, artificial stones used in restoration of heritage structures, nanotechnology based advanced materials, aluminium composite panels, vermiculite based boards, exfoliated perlite, geopolymeric cement, pervious concrete, UPVC doors and windows, stainless steel insulated water tanks, etc.

For establishing the performance of the material/ component, laboratory/ field tests, and field trials, as required, and study of historical data are recommended. For sampling and frequency of tests for new or alternate materials, similar product standards shall be referred to.

The above materials would no longer be treated as new/ alternative materials as soon as Indian Standards for the same are established.

4.2 Approval in writing of the Authority or an agent appointed by them for the purpose of approval of material, shall be obtained by the owner or his agent before any new, alternative or equivalent material is used. The Authority or their agent shall base such approval on the principle set forth in **4.1** and shall require that tests be made (*see* **8.1**) or sufficient evidence or proof be submitted, at the expense of the owner or his agent, to substantiate any claim for the proposed material.

NOTE — For interpretation of the term 'Authority' (*see also* **8.1**), the definition of 'Authority having jurisdiction' given in Part 2 'Administration' of the Code shall apply.

5 THIRD PARTY CERTIFICATION

For ensuring the conformity of materials for which Indian Standards exist and for new or alternative building materials, to requisite quality parameters the services under the third party certification schemes of the Government, may be utilized with advantage.

6 USED MATERIALS

Utilization of used materials may not be precluded provided these meet the requirements of this Part for new materials (*see* Part 2 'Administration' of the Code).

7 STORAGE OF MATERIALS

All building materials shall be stored on the building site in such a way as to prevent deterioration or the loss or impairment of their structural and other essential properties (*see* Part 7 'Construction Management, Practices and Safety' of the Code).

8 METHODS OF TEST

8.1 Every test of material as required in this Part or by the Authority shall be carried out in accordance with the methods of test prescribed in relevant Indian Standards. In cases of methods of tests for which Indian Standards are not available, the same shall conform to the methods of tests issued by the Authority or their agent. A list of Indian Standard methods of test is given at the end of this Part of the Code as the 'accepted standards'. Laboratory tests shall be conducted by recognized laboratories acceptable to the Authority.

8.1.1 The manufacturer/supplier shall satisfy himself that materials conform to the requirements of the specifications and if requested shall supply a certificate to this effect to the purchaser or his representative. When such test certificates are not available, the specimen of the material shall be tested.

LIST OF STANDARDS

Following are the Indian Standards for various building materials and components, to be complied with in fulfillment of the requirements of the Code.

In the following list, while enlisting the Indian Standards, the materials have been categorized in such a way as to make the list user friendly. In the process, if so required, some of the standards have been included even in more than one category of products, such as in the category based on composition as well as on end application of the materials. The list has been arranged in alphabetical order of their principal category as given below:

1) Aluminium and other light metals and their alloys
2) Bitumen and tar products
3) Bricks, blocks and other masonry building units
4) Builder's hardware
5) Building chemicals
6) Building lime and products
7) Clay and stabilized soil products
8) Cement and concrete (including steel reinforcement for concrete)
9) Composite matrix products (including cement and resin matrix products)
10) Conductors and cables
11) Doors, windows and ventilators
12) Electrical wiring, fittings and accessories
13) Fillers, stoppers and putties
14) Floor covering, roofing and other finishes
15) Glass
16) Gypsum based materials

17) Mortar (including sand for mortar)
18) Paints and allied products
19) Polymers, plastics and geosynthetics/ geotextiles
20) Sanitary appliances and water fittings
21) Steel and its alloys
22) Stones
23) Structural sections
24) Thermal insulation materials
25) Threaded fasteners, rivets and nails
26) Timber, bamboo and other lignocellulosic building materials
27) Unit weights of building materials
28) Waterproofing and damp-proofing materials
29) Welding electrodes and wires
30) Wire ropes and wire products (including wire for fencing)

1. ALUMINIUM AND OTHER LIGHT METALS AND THEIR ALLOYS

IS No.	*Title*
733 : 1983	Specification for wrought aluminium and aluminium alloys bars, rods and sections for general engineering purposes (*third revision*)
734 : 1975	Wrought aluminium and aluminium alloys forging stock and forgings (for general engineering purposes) (*second revision*)
736 : 1986	Specification for wrought aluminium and aluminium alloys plate for general engineering purposes (*third revision*)
737 : 2008	Specification for wrought aluminium and aluminium alloys sheet and strip for general engineering purposes (*fourth revision*)
738 : 1994	Specification for wrought aluminium and aluminium alloys drawn tube for general engineering purposes (*third revision*)
739 : 1992	Specification for wrought aluminium and aluminium alloys — Wire for general engineering purposes (*third revision*)
740 : 1977	Specification for wrought aluminium and aluminium alloys rivet stock for general engineering purposes (*second revision*)
1254 : 2007	Corrugated aluminium sheet (*fourth revision*)
1284 : 1975	Wrought aluminium alloys bolt and screw stock for general engineering purposes (*second revision*)
1285 : 2002	Specification for wrought aluminium and aluminium alloys — Extruded round tube and hollow sections for general engineering purposes (*third revision*)
2479 : 1981	Colour code for the identification of aluminium and aluminium alloys for general engineering purposes (*second revision*)
2676 : 1981	Dimensions for wrought aluminium and aluminium alloy sheet and strip
2677 : 1979	Dimensions for wrought aluminium and aluminium alloys, plates and hot rolled sheets
3577 : 1992	Wrought aluminium and its alloys — Rivet, bolt and screw stock — Dimensions and tolerances (*first revision*)
3965 : 1981	Dimensions for wrought aluminium and aluminium alloys bar, rod and section (*first revision*)
6477 : 1983	Dimensions for wrought aluminium and aluminium alloys extruded hollow sections
14712 : 1999	Specification for wrought aluminium and its alloys — Chequered/tread sheets for general engineering purposes
15965 : 2012	Pre-painted aluminium zinc alloy metallic coated steel strip and sheet (Plain)

2. BITUMEN AND TAR PRODUCTS

IS No.	*Title*
73 : 2013	Specification for paving bitumen (*fourth revision*)
212 : 1983	Specification for crude coal tar for general use (*second revision*)
215 : 1995	Specification for road tar (*third revision*)
216 : 2006	Specification for coal tar pitch (*second revision*)
217 : 1988	Specification for cutback bitumen (*second revision*)
218 : 1983	Specification for creosote oil for use as wood preservatives (*second revision*)
454 : 1994	Specification for cutback bitumen from waxy crude (*second revision*)

IS No.	Title
702 : 1988	Specification for industrial bitumen (*second revision*)
1201 to 1220	Methods for testing tar and bituminous materials (*first revision*)
1201 : 1978	Sampling (*first revision*)
1202 : 1978	Determination of specific gravity (*first revision*)
1203 : 1978	Determination of penetration (*first revision*)
1204 : 1978	Determination of residue of specified penetration (*first revision*)
1205 : 1978	Determination of softening point (*first revision*)
1206	Determination of viscosity
(Part 1) : 1978	Industrial viscosity (*first revision*)
(Part 2) : 1978	Absolute viscosity (*first revision*)
(Part 3) : 1978	Kinematic viscosity (*first revision*)
1207 : 1978	Determination of equiviscous temperature (EVT) (*first revision*)
1208 : 1978	Determination of ductility (*first revision*)
1209 : 1978	Determination of flash point and fire point (*first revision*)
1210 : 1978	Float test (*first revision*)
1211 : 1978	Determination of water content (Dean and Stark method) (*first revision*)
1212 : 1978	Determination of loss on heating (*first revision*)
1213 : 1978	Distillation test (*first revision*)
1215 : 1978	Determination of matter insoluble in toluene (*first revision*)
1216 : 1978	Determination of solubility in carbon disulphide or trichloroethylene (*first revision*)
1217 : 1978	Determination of mineral matter (ASH) (*first revision*)
1218 : 1978	Determination of phenols (*first revision*)
1219 : 1978	Determination of naphthalene (*first revision*)
1220 : 1978	Determination of volatile matter content (*first revision*)
3117 : 2004	Specification for bitumen emulsion for roads and allied applications (anionic type) (*first revision*)
8887 : 2004	Specification for bitumen emulsion for roads (cationic type) (*second revision*)
9381 : 1979	Methods for testing tar and bituminous materials: Determination of FRAASS breaking point of bitumen
9382 : 1979	Methods for testing tar and bituminous materials: Determination of effect of heat and air by thin film oven test
10511 : 1983	Method for determination of asphaltenes in bitumen by precipitation with normal haptane
10512 : 2003	Method for determination of wax content in bitumen (*first revision*)
13758	Coal tar pitch — Methods of test
(Part 1) : 1993	Determination of matter insoluble in quinoline
(Part 2) : 1993	Determination of coking value
15172 : 2002	Methods for testing tar and bituminous materials — Determination of curing index for cutback bitumens
15173 : 2002	Methods for testing tar and bituminous materials — Determination of breaking point for cationic bitumen emulsion
15174 : 2002	Methods for testing tar and bituminous material — Determination of breaking point for anionic bitumen emulsion
15462 : 2004	Specification for polymer and rubber modified
15799 : 2008	Methods for testing tar and bituminous materials — Determination of durability of bitumen
15808 : 2008	Specification for multigrade bitumen for use in pavement construction

3. BRICKS, BLOCKS AND OTHER MASONRY BUILDING UNITS

IS No.	Title
1077 : 1992	Specification for common burnt clay building bricks (*fifth revision*)
1725 : 2013	Specification for stabilized soil blocks used in general building construction (*second revision*)
2180 : 1988	Specification for heavy duty burnt clay building bricks (*third revision*)
2185	Specification for concrete masonry units

IS No.	Title
(Part 1) : 2005	Hollow and solid concrete blocks (*third revision*)
(Part 2) : 1983	Hollow and solid lightweight concrete blocks (*first revision*)
(Part 3) : 1984	Autoclaved cellular (aerated) concrete blocks (*first revision*)
(Part 4) : 2008	Cellular concrete blocks using preformed foam
2222 : 1991	Specification for burnt clay perforated building bricks (*third revision*)
2691 : 1988	Specification for burnt clay facing bricks (*second revision*)
2849 : 1983	Specification for non-load bearing gypsum partition blocks (solid and hollow types)
3115 : 1992	Specification for lime based blocks (*second revision*)
3316 : 1974	Specification for structural granite (*first revision*)
3495 (Parts 1 to to 4) : 1992	Methods of test of burnt clay building bricks (*third revision*) Determination of compressive strength Determination of water absorption Determination of efflorescence Determination of warpage
3583 : 1988	Specification for burnt clay paving bricks (*second revision*)
3620 : 1979	Specification for laterite stone block for masonry (*first revision*)
3952 : 2013	Specification for burnt clay hollow bricks and blocks for walls and partitions (*third revision*)
4139 : 1989	Specification for calcium silicate bricks (*second revision*)
4860 : 1968	Specification for acid resistant bricks
4885 : 1988	Specification for sewer bricks (*first revision*)
5454 : 1978	Methods for sampling of clay building bricks (*first revision*)
5751 : 1984	Specification for precast concrete coping blocks (*first revision*)
5779 : 1986	Specification for burnt clay soling bricks (*first revision*)
6165 : 1992	Dimensions for special shapes of clay bricks (*first revision*)
9893 : 1981	Specification for precast concrete blocks for lintels and sills
10360 : 1982	Specification for lime pozzolana concrete blocks for paving
12440 : 1988	Specification for precast concrete stone masonry blocks
12894 : 2002	Specification for pulverized fuel ash lime bricks (*first revision*)
13757 : 1993	Specification for burnt clay fly ash building bricks
15658 : 2006	Specification for precast concrete blocks for paving

4. BUILDER'S HARDWARE

IS No.	Title
204	Specification for tower bolts
(Part 1) : 1991	Ferrous metals (*fifth revision*)
(Part 2) : 1992	Non-ferrous metals (*fifth revision*)
205 : 1992	Specification for non-ferrous metal butt hinges (*fourth revision*)
206 : 2010	Specification for tee and strap hinges (*fifth revision*)
208 : 1996	Specification for door handles (*fifth revision*)
281 : 2009	Specification for mild steel sliding door bolts for use with padlocks (*fourth revision*)
362 : 1991	Specification for parliament hinges (*fifth revision*)
363 : 1993	Specification for hasps and staples (*fourth revision*)
364 : 1993	Specification for fanlight catch (*third revision*)
452 : 1973	Specification for door springs, rat-tail type (*second revision*)
453 : 1993	Specification for double-acting spring hinges (*third revision*)
729 : 1979	Specification for drawer locks, cupboard locks and box locks (*third revision*)
1019 : 1974	Specification for rim latches (*second revision*)
1341 : 1992	Specification for steel butt hinges (*sixth revision*)
1823 : 1980	Specification for floor door stoppers (*third revision*)
1837 : 1966	Specification for fanlight pivots (*first revision*)
2209 : 1976	Specification for mortice locks (vertical type) (*third revision*)
2681 : 1993	Specification for nonferrous metal

IS No.	Title
	sliding door bolts for use with padlocks (*third revision*)
3564 : 1995	Specification for door closers (hydraulically regulated) (*second revision*)
3818 : 1992	Specification for continuous (piano) hinges (*third revision*)
3828 : 1966	Specification for ventilator chains
3843 : 1995	Specification for steel backflap hinges (*first revision*)
3847 : 1992	Specification for mortice night latches (*second revision*)
4621 : 1975	Specification for indicating bolts for use in public baths and lavatories (*first revision*)
4948 : 2002	Specification for welded steel wire fabric for general use (*second revision*)
4992 : 1975	Specification for door handles for mortice locks (vertical type) (*first revision*)
5187 : 1972	Specification for flush bolts (*first revision*)
5899 : 1970	Specification for bathroom latches
5930 : 1970	Specification for mortice latch (vertical type)
6315 : 1992	Specification for floor springs (hydraulically regulated) for heavy doors (*second revision*)
6318 : 1971	Specification for plastic window stays and fasteners
6343 : 1982	Specification for door closers (pneumatically regulated) for light door weighing up to 40 kg (*first revision*)
6607 : 1972	Specification for rebated mortice locks (vertical type)
7196 : 1974	Specification for hold fast
7197 : 1974	Specification for double action floor springs (without oil check) for heavy doors
7534 : 1985	Specification for sliding locking bolts for use with padlocks (*first revision*)
8756 : 1978	Specification for ball catches for use in wooden almirah
9106 : 1979	Specification for rising butt hinges
9131 : 1979	Specification for rim locks
9460 : 1980	Specification for flush drop handle for drawer
9899 : 1981	Specification for hat coat and wardrobe hooks
10019 : 1981	Specification for mild steel stays and fasteners
10090 : 1982	Specification for numericals
10342 : 1982	Specification for curtain rail system
12817 : 2013	Specification for stainless steel butt hinges (*second revision*)
12867 : 1989	Specification for PVC hand rails covers
14912 : 2001	Specification for door closers concealed type (hydraulically regulated)
15833 : 2009	Specification for stainless steel tower bolts
15834 : 2008	Specification for stainless steel sliding door bolts for use with padlocks
16015 : 2013	Specification for mortice locks with lever mechanism (vertical type, sliding door locks and dead locks)
16016 : 2013	Specification for cylindrical locks with pin tumbler mechanism

5. BUILDING CHEMICALS

a) Anti-termite Chemicals

IS No.	Title
8944 : 2005	Specification for chlorpyrifos emulsifiable concentrates (*first revision*)
16131 : 2015	Specification for imidacloprid suspension concentrate (sc)

b) Chemical Admixture/Water Proofing Compounds

IS No.	Title
2645 : 2003	Specification for integral water-proofing compounds for cement mortar and concrete (*second revision*)
6925 : 1973	Methods of test for determination of water soluble chlorides in concrete admixtures
9103 : 1999	Specification for concrete admixtures (*first revision*)

c) Sealants/Fillers

IS No.	Title
1834 : 1984	Specification for hot applied sealing compound for joint in concrete (*first revision*)

IS No.	Title
1838	Specification for preformed fillers for expansion joint in concrete pavements and structures (non-extruding and resilient type)
(Part 1) : 1983	Bitumen impregnated fibre (*first revision*)
(Part 2) : 1984	CNSL aldehyde resin and coconut pith
(Part 3) : 2011	Polymer based
10566 : 1983	Methods of tests for preformed fillers for expansion joint in concrete paving and structural construction
11433	Specification for one grade polysulphide based joint sealant
(Part 1) : 1985	General requirements
(Part 2) : 1986	Methods of test
12118	Specification for two parts polysulphide based sealants
(Part 1) : 1987	General requirements
(Part 2) : 1987	Methods of test

d) Adhesives

IS No.	Title
848 : 2006	Specification for synthetic resin adhesives for plywood (phenolic and aminoplastic) (*second revision*)
849 : 1994	Specification for cold setting case in glue for wood (*first revision*)
851 : 1978	Specification for synthetic resin adhesives for construction work (non-structural) in wood (*first revision*)
852 : 1994	Specification for animal glue for general wood-working purposes (*second revision*)
1508 : 1972	Specification for extenders for use in synthetic resin adhesives (urea-formaldehyde) for plywood (*first revision*)
4835 : 1979	Specification for polyvinyl acetate dispersion-based adhesives for wood (*first revision*)
9188 : 1979	Performance requirements for adhesive for structural laminated wood products for use under exterior exposure condition
12830 : 1989	Rubber based adhesives for fixing PVC tiles to cement
12994 : 1990	Epoxy adhesives, room temperature curing general purpose
15477 : 2004	Specification for adhesives for use with ceramic tiles and mosaics

6. BUILDING LIME AND PRODUCTS

IS No.	Title
712 : 1984	Specification for building limes (*third revision*)
1624 : 1986	Method of field testing of building lime (*second revision*)
2686 : 1977	Specification for cinder as fine aggregates for use in lime concrete (*first revision*)
3068 : 1986	Specification for broken brick (burnt-clay) coarse aggregates for use in lime concrete (*second revision*)
3115 : 1992	Specification for lime based blocks (*second revision*)
3182 : 1986	Specification for broken bricks (burnt clay) fine aggregates for use in lime mortar (*second revision*)
4098 : 1983	Specification for lime-pozzolana mixture (*first revision*)
4139 : 1989	Specification for calcium silicate bricks (*second revision*)
6932	Method of tests for building limes
(Part 1) : 1973	Determination of insoluble residue, loss on ignition, insoluble matter, silicon dioxide, ferric and aluminium oxide, calcium oxide and magnesium oxide
(Part 2) : 1973	Determination of carbon dioxide content
(Part 3) : 1973	Determination of residue on slaking of quicklime
(Part 4) : 1973	Determination of fineness of hydrated lime
(Part 5) : 1973	Determination of unhydrated oxide
(Part 6) : 1973	Determination of volume yield of quicklime
(Part 7) : 1973	Determination of compressive and transverse strength
(Part 8) : 1973	Determination of workability
(Part 9) : 1973	Determination of soundness
(Part 10) : 1973	Determination of popping and pitting of hydrated lime
(Part 11) : 1984	Determination of setting time of hydrated lime
10360 : 1982	Specification for lime pozzolana concrete blocks for paving

IS No.	Title
10772 : 1983	Specification for quick setting lime pozzolana mixture
12894 : 2002	Specification for pulverized fuel ash lime bricks (*first revision*)
15648 : 2006	Specification for pulverized fuel ash for lime-pozzolana mixture applications

7. CLAY AND STABILIZED SOIL PRODUCTS

a) Blocks

IS No.	Title
3952 : 2013	Specification for burnt clay hollow bricks and blocks for walls and partitions (*third revision*)

b) Stabilized Soil Products

IS No.	Title
1725 : 2013	Specification for stabilized soil blocks used in general building construction (*second revision*)

c) Bricks

IS No.	Title
1077 : 1992	Specification for common burnt clay building bricks (*fifth revision*)
2180 : 1988	Specification for heavy duty burnt clay building bricks (*third revision*)
2222 : 1991	Specification for burnt clay perforated building bricks (*third revision*)
2691 : 1988	Specification for burnt clay facing bricks (*second revision*)
3495 (Parts 1 to 4) : 1992	Methods of test of burnt clay building bricks (*third revision*)
	Determination of compressive strength
	Determination of water absorption
	Determination of efflorescence
	Determination of warpage
3583 : 1988	Specification for burnt clay paving bricks (*second revision*)
3952 : 2013	Specification for burnt clay hollow bricks and blocks for walls and partitions (*third revision*)
4885 : 1988	Specification for sewer bricks (*first revision*)
5454 : 1978	Methods for sampling of clay building bricks (*first revision*)
5779 : 1986	Specification for burnt clay soling bricks (*first revision*)
6165 : 1992	Dimensions for special shapes of clay bricks (*first revision*)
13757 : 1993	Specification for burnt clay fly ash building bricks

d) Jallies

IS No.	Title
7556 : 1988	Specification for burnt clay jallies (*first revision*)

e) Tiles

IS No.	Title
654 : 1992	Specification for clay roofing tiles, Mangalore pattern (*third revision*)
1464 : 1992	Specification for clay ridge and ceiling tiles (*second revision*)
1478 : 1992	Specification for clay flooring tiles (*second revision*)
2690	Specification for burnt clay flat terracing tiles
(Part 1) : 1993	Machine made (*second revision*)
(Part 2) : 1992	Hand made (*second revision*)
3367 : 1993	Specification for burnt clay tiles for use in lining irrigation and drainage works (*second revision*)
3951	Specification for hollow clay tiles for floor and roofs
(Part 1) : 2009	Filler type (*second revision*)
(Part 2) : 2009	Structural type (*second revision*)
8920 : 1978	Methods for sampling of burnt clay tiles
13317 : 1992	Specification for clay roofing county tiles, half round and flat tiles

8. CEMENT AND CONCRETE (INCLUDING STEEL REINFORCEMENT FOR CONCRETE)

a) Aggregates

IS No.	Title
383 : 2016	Specification for coarse and fine aggregates for concrete (*third revision*)
650 : 1991	Specification for standard sand for testing of cement (*second revision*)
1542 : 1992	Specification for sand for plaster (*second revision*)
2116 : 1980	Specification for sand for masonry mortars (*first revision*)

IS No.	Title
2386	Methods of test for aggregates for concrete
(Part 1) : 1963	Particle size and shape
(Part 2) : 1963	Estimation of deleterious materials and organic impurities
(Part 3) : 1963	Specific gravity, density, voids, absorption and bulking
(Part 4) : 1963	Mechanical properties
(Part 5) : 1963	Soundness
(Part 6) : 1963	Measuring mortar making properties of fine aggregates
(Part 7) : 1963	Alkali aggregate reactivity
(Part 8) : 1963	Petrographic examination
2430 : 1986	Methods of sampling of aggregates of concrete (*first revision*)
6579 : 1981	Specification for coarse aggregate for water bound macadam (*first revision*)
9142 : 1979	Specification for artificial light-weight aggregates for concrete masonry units

b) Cement

IS No.	Title
269 : 2015	Specification for ordinary Portland cement (*sixth revision*)
455 : 2015	Specification for Portland slag cement (*fifth revision*)
1489	Specification for Portland pozzolana cement
(Part 1) : 2015	Flyash based (*fourth revision*)
(Part 2) : 2015	Calcined clay based (*fourth revision*)
3466 : 1988	Specification for masonry cement (*second revision*)
6452 : 1989	Specification for high alumina cement for structural use (*first revision*)
6909 : 1990	Specification for supersulphated cement (*first revision*)
8041 : 1990	Specification for rapid hardening Portland cement (*second revision*)
8042 : 2015	Specification for white Portland cement (*third revision*)
8043 : 1991	Specification for hydrophobic Portland cement (*second revision*)
12330 : 1988	Specification for sulphate resisting Portland cement
12600 : 1989	Specification for low heat Portland cement
16415 : 2015	Specification for composite cement

c) Supplementary Cementitious Materials (Mineral Admixtures including Pozzolanas)

IS No.	Title
1344 : 1981	Specification for calcined clay pozzolana (*second revision*)
1727 : 1967	Methods of test for pozzolanic materials (*first revision*)
3812	Specification for pulverized fuel ash
(Part 1) : 2013	For use as pozzolana in cement, cement mortar and concrete (*third revision*)
(Part 2) : 2013	For use as admixture in cement mortar and concrete (*third revision*)
6491 : 1972	Method of sampling of flyash
12089 : 1987	Specification for granulated slag for manufacture of Portland slag cement
12870 : 1989	Methods of sampling calcined clay pozzolana
15388 : 2003	Specification for silica fume
16354 : 2015	Specification for metakaolin for use in cement, cement mortar and concrete

d) Chemical Admixtures

IS No.	Title
6925 : 1973	Methods of test for determination of water soluble chlorides in concrete admixtures
9103 : 1999	Specification for admixtures for concrete (*first revision*)

e) Concrete

IS No.	Title
456 : 2000	Code of Practice for plain and reinforced concrete (*fourth revision*)
1343 : 2012	Code of Practice for prestressed concrete (*second revision*)
4926 : 2003	Code of Practice for ready-mixed concrete (*second revision*)

f) Cement and Concrete Sampling and Methods of Test

IS No.	Title
516 : 1959	Methods of test for strength of concrete
1199 : 1959	Methods of sampling and analysis of concrete
2770 (Part 1) : 1967	Methods of testing bond in reinforced concrete: Pullout test

IS No.	Title
3085 : 1965	Methods of test for permeability of cement mortar and concrete
3535 : 1986	Methods of sampling hydraulic cement (*first revision*)
4031	Methods of physical tests for hydraulic cement
(Part 1) : 1996	Determination of fineness by dry sieving (*second revision*)
(Part 2) : 1999	Determination of fineness by specific surface by Blaine air permeability method (*second revision*)
(Part 3) : 1988	Determination of soundness (*first revision*)
(Part 4) : 1988	Determination of consistency of standard cement paste (*first revision*)
(Part 5) : 1988	Determination of initial and final setting times (*first revision*)
(Part 6) : 1988	Determination of compressive strength of hydraulic cement (other than masonry cement)(*first revision*)
(Part 7) : 1988	Determination of compressive strength of masonry cement (*first revision*)
(Part 8) : 1988	Determination of transverse and compressive strength of plastic mortar using prism (*first revision*)
(Part 9) : 1988	Determination of heat of hydration (*first revision*)
(Part 10) : 1988	Determination of drying shrinkage (*first revision*)
(Part 11) : 1988	Determination of density (*first revision*)
(Part 12) : 1988	Determination of air content of hydraulic cement mortar (*first revision*)
(Part 13) : 1988	Measurement of water retentivity of masonry cement (*first revision*)
(Part 14) : 1989	Determination of false set
(Part 15) : 1991	Determination of fineness by wet sieving
4032 : 1985	Methods of chemical analysis for hydraulic cement (*first revision*)
5816 : 1999	Method of test for splitting tensile strength of concrete (*first revision*)
8142 : 1976	Methods of test for determining setting time of concrete by penetration resistance
9013 : 1978	Method of making. curing and determining compressive strength of accelerated cured concrete test specimens
9284 : 1979	Method of test for abrasion resistance of concrete
12423 : 1988	Methods for colorimetric analysis of hydraulic cement
12803 : 1989	Methods of analysis of hydraulic cement by X-ray fluorescence spectrometer
12813 : 1989	Method of analysis of hydraulic cement by atomic absorption spectrophotometer
13311	Methods of non-destructive testing of concrete
(Part 1) : 1992	Ultrasonic pulse velocity
(Part 2) : 1992	Rebound hammer
14959	Method of test for determination of water soluble and acid soluble chlorides in mortar and concrete
(Part 1) : 2001	Fresh mortar
(Part 2) : 2001	Hardened mortar and concrete

g) Treatment of Concrete Joints

IS No.	Title
1834 : 1984	Specification for hot applied sealing compound for joint in concrete (*first revision*)
1838	Specification for preformed fillers for expansion joint in concrete pavements and structures (non extruding and resilient type)
(Part 1) : 1983	Bitumen impregnated fibre (*first revision*)
(Part 2) : 1984	CNSL aldehyde resin and coconut pith
(Part 3) : 2011	Polymer based
10566 : 1983	Methods of test for preformed fillers for expansion joints in concrete paving and structural construction
11433	Specification for one grade polysulphide based joint sealant
(Part 1) : 1985	General requirements
(Part 2) : 1986	Methods of test
12118	Specification for two parts polysulphide based sealants
(Part 1) : 1987	General requirements
(Part 2) : 1987	Methods of test

h) Steel Reinforcement and Prestressing Steel for Concrete

IS No.	*Title*
432	Specification for mild steel and medium tensile steel bars and hard drawn steel wire for concrete reinforcement
(Part 1) : 1982	Mild steel and medium tensile steel bars (*third revision*)
(Part 2) : 1982	Hard drawn steel wire (*third revision*)
1566 : 1982	Specification for hard drawn steel wire fabric for concrete reinforcement (*second revision*)
1608 : 2005	Metallic materials — Tensile testing at ambient temperature (*third revision*)
1785	Specification for plain hard drawn steel wire for pre-stressed concrete
(Part 1) : 1983	Cold drawn stress-relieved wire (*second revision*)
(Part 2) : 1983	As drawn wire (*first revision*)
1786 : 2008	Specification for high strength deformed steel bars and wires for concrete reinforcement (*fourth revision*)
2090 : 1983	Specification for high tensile steel bars used in prestressed concrete (*first revision*)
6003 : 2010	Specification for indented wire for prestressed concrete (*second revision*)
6006 : 2014	Specification for uncoated stress-relieved strand for prestressed concrete (*second revision*)
10790	Methods of sampling of steel for prestressed and reinforced concrete
(Part 1) : 1984	Prestressing steel
(Part 2) : 1984	Reinforcing steel
13620 : 1993	Specification for fusion bonded epoxy coated reinforcing bars
14268 : 1995	Specification for uncoated stress relieved low relaxation seven ply strand for prestressed concrete
16172 : 2014	Specification for reinforcement couplers for mechanical splices of bars in concrete

9. COMPOSITE MATRIX PRODUCTS

a) Cement Matrix Products

i) *Precast Concrete Products*

IS No.	*Title*
2174 : 1962	Specification for reinforced concrete dust bins
2185	Specification for concrete masonry units
(Part 1) : 2005	Hollow and solid concrete blocks (*third revision*)
(Part 2) : 1983	Hollow and solid lightweight concrete blocks (*first revision*)
(Part 3) : 1984	Autoclaved cellular (aerated) concrete blocks (*first revision*)
(Part 4) : 2008	Cellular concrete blocks using preformed foam
4996 : 1984	Specification for reinforced concrete fence posts (*first revision*)
5751 : 1984	Specification for precast concrete coping blocks (*first revision*)
5758 : 1984	Specification for precast concrete kerbs (*first revision*)
5820 : 1970	Specification for precast concrete cable covers
6072 : 1971	Specification for autoclaved reinforced cellular concrete wall slabs
6073 : 2006	Specification for autoclaved reinforced cellular concrete floor and roof slabs (*first revision*)
6441	Methods of test for autoclaved cellular concrete products
(Part 1) : 1972	Determination of unit weight or bulk density and moisture content
(Part 2) : 1972	Determination of drying shrinkage
(Part 4) : 1972	Corrosion protection of steel reinforcement in autoclaved cellular concrete
(Part 5) : 1972	Determination of compressive strength
(Part 6) : 1973	Strength, deformation and cracking of flexural members subject to bending — Short duration loading test
(Part 7) : 1973	Strength, deformation and cracking of flexural members subject to bending — Sustained loading test
(Part 8) : 1973	Loading tests for flexural members in diagonal tension
(Part 9) : 1973	Jointing of autoclaved cellular concrete elements
6523 : 1983	Specification for precast reinforced concrete door and window frames (*first revision*)

IS No.	Title
9375 : 1979	Specification for precast reinforced concrete plant guards
9872 : 1981	Specification for precast concrete septic tanks
9893 : 1981	Specification for precast concrete blocks for lintels and sills
12440 : 1988	Specification for precast concrete stone masonry blocks
12592 : 2002	Specification for precast concrete manhole covers and frames (*first revision*)
13356 : 1992	Specification for precast ferrocement water tanks (250 to 10 000 litres capacity)
13990 : 1994	Specification for precast reinforced concrete planks and joists for flooring and roofing
14143 : 1994	Specification for prefabricated brick panel and partially precast concrete joist for flooring and roofing
14201 : 1994	Specification for precast reinforced concrete channel unit for construction of floors and roofs
14241 : 1995	Specification for precast L-Panel units for roofing

ii) *Asbestos Fibre Cement Products*

IS No.	Title
459 : 1992	Specification for corrugated and semi-corrugated asbestos cement sheets (*third revision*)
1592 : 2003	Specification for asbestos cement pressure pipes and joints (*fourth revision*)
1626	Specification for asbestos cement building pipes and pipe fittings, gutters and gutter fittings and roofing fittings
(Part 1) : 1994	Pipes and pipe fittings (*second revision*)
(Part 2) : 1994	Gutters and gutter fittings (*second revision*)
(Part 3) : 1994	Roofing fittings (*second revision*)
2096 : 1992	Specification for asbestos cement flat sheets (*first revision*)
2098 : 1997	Specification for asbestos cement building boards (*first revision*)
5913 : 2003	Methods of test for asbestos cement products (*second revision*)
6908 : 1991	Specification for asbestos cement pipes and fittings for sewerage and drainage (*first revision*)
7639 : 1975	Method of sampling asbestos cement products
9627 : 1980	Specification for asbestos cement pressure pipes (light duty)
13000 : 1990	Specification for silica-asbestos-cement flat sheets
13008 : 1990	Specification for shallow corrugated asbestos cement sheets

iii) *Other Fibre Cement Products*

IS No.	Title
14862 : 2000	Specification for fibre cement flat sheets
14871 : 2000	Specification for products in fibre reinforced cement long corrugated or asymmetrical section sheets and fittings for roofing and cladding

iv) *Concrete Pipes and Pipes Lined/Coated with Concrete or Mortar*

IS No.	Title
458 : 2003	Specification for precast concrete pipes (with and without reinforcement) (*fourth revision*)
784 : 2001	Specification for prestressed concrete pipes (including specials) (*second revision*)
1916 : 1989	Specification for steel cylinder pipe with concrete lining and coating (*first revision*)
3597 : 1998	Methods of test for concrete pipes (*second revision*)
4350 : 1967	Specification for concrete porous pipes for under drainage
7319 : 1974	Specification for perforated concrete pipes
7322 : 1985	Specification for specials for steel cylinder reinforced concrete pipes (*first revision*)
15155 : 2002	Specification for bar/wire wrapped steel cylinder pipe with mortar lining and coating

b) Resin Matrix Products

IS No.	Title
1998 : 1962	Methods of test for thermosetting synthetic resin bonded laminated sheets
2036 : 1995	Specification for phenolic laminated sheets (*second revision*)

IS No.	Title
2046 : 1995	Specification for decorative thermosetting synthetic resin bonded laminated sheets (*second revision*)

10. CONDUCTORS AND CABLES

IS No.	Title
694 : 2010	Polyvinyl chloride insulated unsheathed and sheathed cables/ cords with rigid and flexible conductor for rated voltages up to and including 450/750 V (*fourth revision*)
1554	Specification for PVC insulated (heavy duty) electric cables
(Part 1) : 1988	For working voltages up to and including 1 100 volts (*third revision*)
(Part 2) : 1988	For working voltages from 3.3 kV up to and including 11 kV (*second revision*)
3961	Recommended current rating for cables
(Part 1) : 1967	Paper-insulated lead-sheathed cables
(Part 2) : 1967	PVC-insulated and PVC-sheathed heavy duty cables
(Part 3) : 1968	Rubber insulated cables
(Part 5) : 1968	PVC insulated light duty cables
4289	Specification for flexible cables for lifts and other flexible connections
(Part 1) : 1984	Elastomer insulated cables (*first revision*)
(Part 2) : 2000	PVC insulated circular cables
7098	Specification for cross-linked polyethylene insulated sheathed cables
(Part 1) : 1988	For working voltage up to and including 1 100 V (*first revision*)
(Part 2) : 2011	For working voltages form 3.3 kV up to and including 33 kV (*second revision*)
(Part 3) : 1993	For working voltages from 66 kV upto and including 220 kV
8130 : 2013	Specification for conductors for insulated electric cables and flexible cords (*second revision*)
9968	Specification for elastomer-insulated cables
(Part 1) : 1988	For working voltages up to and including 1 100 V (*first revision*)
(Part 2) : 2002	For working voltages from 3.3 kV up to and including 33 kV (*first revision*)
10810	Methods of test for cables
(Part 0) : 1984	General
(Part 1) : 1984	Annealing test for wires used in conductors
(Part 2) : 1984	Tensile test for aluminium wires
(Part 3) : 1984	Wrapping test for aluminium wires
(Part 4) : 1984	Persulphate test of conductor
(Part 5) : 1984	Conductor resistance test
(Part 6) : 1984	Thickness of thermoplastic and elastomeric insulation and sheath
(Part 7) : 1984	Tensile strength and elongation at break of thermoplastic and elastomeric insulation and sheath
(Part 8) : 1984	Breaking strength and elongation at break for impregnated paper insulation
(Part 9) : 1984	Tear resistance for paper insulation
(Part 10) : 1984	Loss of mass test
(Part 11) : 1984	Thermal ageing in air
(Part 12) : 1984	Shrinkage test
(Part 13) : 1984	Ozone resistance test
(Part 14) : 1984	Heat shock test
(Part 15) : 1984	Hot deformation test
(Part 16) : 1986	Accelerated ageing test by oxygen pressure method
(Part 17) : 1986	Tear resistance test for heavy duty sheath
(Part 19) : 1984	Bleeding and blooming test
(Part 20) : 1984	Cold bend test
(Part 21) : 1984	Cold impact test
(Part 22) : 1984	Vicat softening point
(Part 23) : 1984	Melt-flow index
(Part 24) : 1984	Water soluble impurities test of insulating paper
(Part 25) : 1984	Conductivity of water extract test of insulating paper
(Part 26) : 1984	*p*H value of water extract test of insulating paper
(Part 27) : 1984	Ash content test of insulating paper
(Part 28) : 1984	Water absorption test (Electrical)
(Part 29) : 1984	Environmental stress cracking test
(Part 30) : 1984	Hot set test

IS No.	Title
(Part 31) : 1984	Oil resistance test
(Part 32) : 1984	Carbon content test for polyethylene
(Part 33) : 1984	Water absorption test (Gravimetric)
(Part 34) : 1984	Measurement of thickness of metallic sheath
(Part 35) : 1984	Determination of tin in lead alloy for sheathing
(Part 36) : 1984	Dimensions of armouring material
(Part 37) : 1984	Tensile strength and elongation at break of armouring materials
(Part 38) : 1984	Torsion test on galvanized steel wires for armouring
(Part 39) : 1984	Winding test on galvanized steel strips for armouring
(Part 40) : 1984	Uniformity of zinc coating on steel armour
(Part 41) : 1984	Mass of zinc coating on steel armour
(Part 42) : 1984	Resistivity test of armour wires and strips and conductance test of armour (wires/strips)
(Part 43) : 1984	Insulation resistance
(Part 44) : 1984	Spark test
(Part 45) : 1984	High voltage test
(Part 46) : 1984	Partial discharge test
(Part 47) : 1984	Impulse test
(Part 48) : 1984	Dielectric power factor test
(Part 49) : 1984	Heating cycle test
(Part 50) : 1984	Bending test
(Part 51) : 1984	Dripping test
(Part 52) : 1984	Drainage test
(Part 53) : 1984	Flammability test
(Part 54) : 1984	Static flexibility test
(Part 55) : 1986	Abrasion test
(Part 56) : 1987	Accelerated ageing by the air-pressure method
(Part 57) : 1987	Flexing test
(Part 58) : 1998	Oxygen index test
(Part 59) : 1988	Determination of the amount of halogen acid gas evolved during combustion of polymeric materials taken from cables
(Part 60) : 1988	Thermal stability of PVC insulation and sheath
(Part 61) : 1988	Flame retardant test
(Part 62) : 1993	Fire resistance test for bunched cables
(Part 63) : 1993	Smoke density of electric cables under fire conditions
(Part 64) : 2003	Measurement of temperature index
12943 : 1990	Brass glands for PVC cables

11. DOORS, WINDOWS AND VENTILATORS

a) Wooden Doors, Windows and Ventilators

IS No.	Title
1003	Specification for timber panelled and glazed shutters
(Part 1) : 2003	Door shutters (*fourth revision*)
(Part 2) : 1994	Window and ventilator shutters (*third revision*)
2191	Specification for wooden flush door shutters (cellular and hollow core type)
(Part 1) : 1983	Plywood face panels (*fourth revision*)
(Part 2) : 1983	Particle board face panels and hardboard face panels (*third revision*)
2202	Specification for wooden flush door shutters (solid core type)
(Part 1) : 1999	Plywood face panels (*sixth revision*)
(Part 2) : 1983	Particle board face panels and hardboard face panels (*third revision*)
4020	Method of tests for door shutters
(Part 1) : 1998	General (*third revision*)
(Part 2) : 1998	Measurement of dimensions and squareness (*third revision*)
(Part 3) : 1998	Measurement of general flatness (*third revision*)
(Part 4) : 1998	Local planeness test (*third revision*)
(Part 5) : 1998	Impact indentation test (*third revision*)
(Part 6) : 1998	Flexure test (*third revision*)
(Part 7) : 1998	Edge loading test (*third revision*)
(Part 8) : 1998	Shock resistance test (*third revision*)
(Part 9) : 1998	Buckling resistance test (*third revision*)
(Part 10) : 1998	Slamming test (*third revision*)
(Part 11) : 1998	Misuse test (*third revision*)
(Part 12) : 1998	Varying humidity test (*third revision*)
(Part 13) : 1998	End immersion test (*third revision*)
(Part 14) : 1998	Knife test (*third revision*)
(Part 15) : 1998	Glue adhesion test (*third revision*)
(Part 16) : 1998	Screw withdrawal resistance test (*third revision*)
4021 : 1995	Specification for timber door, window and ventilator frames

IS No.	Title
6198 : 1992	Specification for ledged, braced and battened timber shutters (*second revision*)

b) Metal Doors, Windows and Ventilators

IS No.	Title
1038 : 1983	Specification for steel doors, windows and ventilators (*third revision*)
1361 : 1978	Specification for steel windows for industrial buildings (*first revision*)
1948 : 1961	Specification for aluminium doors, windows and ventilators
1949 : 1961	Specification for aluminium windows for industrial buildings
4351 : 2003	Specification for steel door frames (*second revision*)
6248 : 1979	Specification for metal rolling shutters and rolling grills (*first revision*)
7452 : 1990	Specification for hot rolled steel sections for doors, windows and ventilators (*second revision*)
10451 : 1983	Specification for steel sliding shutters (top hung type)
10521 : 1983	Specification for collapsible gates

c) Plastic Doors and Windows

IS No.	Title
14856 : 2000	Specification for glass fibre reinforced (GRP) panel type door shutters for internal use
15380 : 2003	Specification for moulded raised high density fibre (HDF) panel doors
15931 : 2012	Specification for solid panel foam UPVC door shutters

d) Concrete Door and Window Frames

IS No.	Title
6523 : 1983	Specification for precast reinforced concrete door and window frames (*first revision*)

e) Other Composite Material Doors and Windows

IS No.	Title
16073 : 2013	Specification for bamboo-jute composite panel door shutter
16074 : 2014	Specification for steel flush door shutters
16096 : 2013	Specification for phenol bonded bamboo-jute composite hollow door shutter

f) Fire Check Doors

IS No.	Title
3614	Specification for fire-check doors
(Part 1) : 1966	Plate, metal covered and rolling type
(Part 2) : 1992	Metallic and non-metallic fire check doors — Resistance test and performance criteria

g) Mesh/Net for Mosquito/Vector Prevention

IS No.	Title
1568 : 1970	Specification for wire cloth for general purposes (*first revision*)
3150 : 1982	Specification for hexagonal wire netting for general purposes (*second revision*)
11199 : 1985	Specification for HDPE mono-filament twine door nets

12. ELECTRICAL WIRING, FITTINGS AND ACCESSORIES

IS No.	Title
371 : 1999	Specification for ceiling roses (*third revision*)
374 : 1979	Specification for electric ceiling type fans and regulators (*third revision*)
418 : 2004	Specification for tungsten filament lamp for domestic and similar general lighting purposes (*fourth revision*)
1258 : 2005	Specification for bayonet lamp holders (*fourth revision*)
1293 : 2005	Specification for plugs and socket-outlets of rated voltage up to and including 250 volts and rated current up to and including 16 amperes (*third revision*)
1554	PVC insulated (heavy duty) electric cables
(Part 1) : 1988	For working voltages upto and including 1 100 V (*third revision*)
(Part 2) : 1988	For working voltages from 3.3 kV upto and including 11 kV (*second revision*)
2086 : 1993	Specification for carriers and bases used in re-wirable type electric fuses up to 650 volts (*third revision*)
2206 (Part 1) : 1984	Specification for flameproof electric lighting fittings: Well glass and bulkhead types (*first revision*)

IS No.	Title
2215 : 2006	Specification for starters for fluorescent lamps (*third revision*)
2412 : 1975	Specification for link clips for electrical wiring (*first revision*)
2418	Specification for tubular fluorescent lamps for general lighting services
(Part 1) : 1977	Requirements and tests (*first revision*)
(Part 2) : 1977	Standard lamp data sheets (*first revision*)
(Part 3) : 1977	Dimensions of G-5 and G-13 bi-pin caps (*first revision*)
(Part 4) : 1977	Go and no-go gauges for G-5 and G-13 bi-pin caps (*first revision*)
2675 : 1983	Specification for enclosed distribution fuseboards and cutouts for voltages not exceeding 1 000 V (*second revision*)
3323 : 1980	Specification for bi-pin lamp holders for tubular fluorescent lamps (*first revision*)
3324 : 1982	Specification for holders for starters for tubular fluorescent lamps (*first revision*)
3419 : 1988	Specification for fittings for rigid non-metallic conduits (*second revision*)
3480 : 1966	Specification for flexible steel conduits for electrical wiring
3528 : 1966	Specification for waterproof electric lighting fittings
3553 : 1966	Specification for watertight electric lighting fittings
3837 : 1976	Specification for accessories for rigid steel conduits for electrical wiring (*first revision*)
3854 : 1997	Specification for switches for domestic and similar purposes (*second revision*)
4160 : 2005	Specification for interlocking switch socket outlets (*first revision*)
4649 : 1968	Specification for adaptors for flexible steel conduits
5077 : 1969	Specification for decorative lighting outfits
8030 : 1976	Specification for luminaires for hospitals
9537	Specification for conduits for electrical installations
(Part 1) : 1980	General requirements
(Part 2) : 1981	Rigid steel conduits
(Part 3) : 1983	Rigid plain conduits for insulating materials
(Part 4) : 1983	Pliable self-recovering conduits for insulating materials
(Part 5) : 2000	Pliable conduits of insulating materials
(Part 6) : 2000	Pliable conduits of metal or composite materials
(Part 8) : 2003	Rigid non threadable conduits of aluminium alloy
9926 : 1981	Specification for fuse wires used in rewirable type electric fuses up to 650 volts
10322	Specification for luminaires
(Part 1) : 2014	General requirements and tests (*first revision*)
(Part 2) : 1982	Constructional requirements
(Part 3) : 1984	Screw and screwless terminations
(Part 4) : 1984	Methods of tests
(Part 5/Sec 1) : 2012	Particular requirements, Section 1 General purpose luminaires (*first revision*)
(Part 5/Sec 2) : 2012	Particular requirements, Section 2 Recessed luminaires (*first revision*)
(Part 5/Sec 3) : 2012	Particular requirements, Section 3 Luminaires for road and street lighting (*first revision*)
(Part 5/Sec 4) : 1987	Particular requirements, Section 4 Portable general purpose luminaires
(Part 5/Sec 5) : 2013	Particular requirements, Section 5 Flood light (*first revision*)
(Part 5/Sec 6) : 2013	Particular requirements, Section 6 Hand lamps
(Part 5/Sec 7) : 2013	Particular requirements, Section 7 Lighting chains
(Part 5/Sec 8) : 2013	Particular requirements, Section 8 Emergency lighting
11037 : 1984	Electronic type fan regulators
12449	Starting devices (other than glow starters)
(Part 1) : 1988	General and safety requirements
(Part 2) : 1988	Performance requirements
12776 : 2002	Specification for galvanized strand for earthing (*first revision*)

IS No.	Title
13010 : 2002	AC watt-hour meters, Class 0.5, 1 and 2 (*first revision*)
13779 : 1999	AC static watthour meters (Class 1 and 2) (*first revision*)
13947 (Part 5/ Sec 2) : 2004	Specification for low-voltage switchgear and controlgear: Part 5 Control circuit devices and switching elements, Section 2 Proximity switches
14763 : 2000	Conduit for electrical purposes, outside diameters of conduits for electrical installations and threads for conduits and fittings
14768	Conduit fittings for electrical installations
(Part 1) : 2000	General requirements
(Part 2) : 2003	Metal conduit fittings
14772 : 2000	Enclosures for accessories for household and similar fixed electrical installations
14927	Cable trunking and ducting systems for electrical installations
(Part 1) : 2001	General requirements
(Part 2) : 2001	Cable trunking and ducting systems intended for mounting on walls or ceilings
14930	Conduit systems for electrical installations
(Part 1) : 2001	General requirements
(Part 2) : 2001	Particular requirements for conduit system buried underground
15111	Self ballasted lamps for general lighting services:
(Part 1) : 2002	Safety requirements
(Part 2) : 2002	Performance requirements
15368 : 2003	Cable reels for household and similar purposes
15518 (Part 1) : 2004	Safety requirements for incandescent lamps: Part 1 Tungsten filament lamps for domestic and similar general lighting purposes
15787 : 2008	Switch-socket-outlets (non-interlock type)
15968 : 2013	Ballasts for tubular fluorescent lamps — Performance requirements
15974 : 2013	Auxiliaries for lamps — Starting devices (other than glow starters) — Performance requirements

IS No.	Title
16102	Self ballasted LED-lamps for general lighting services
(Part 1) : 2012	Safety requirements
(Part 2) : 2012	Performance requirements
16103	LED modules for general lighting
(Part 1) : 2012	Safety specification
(Part 2) : 2012	Performance requirements
16148 : 2014	Performance specification for metal halide lamps
16246: 2015	Specification for elastomer insulated cables with limited circuit integrity when affected by fire
IS/IEC 60079-1: 2007	Explosive atmospheres — Part 1 : Equipment protection by flameproof enclosures "d"
IS/IEC 60898-1: 2002	Electrical accessories — Circuit breakers for overcurrent protection for household and similar installations — Part 1: Circuit-breakers for ac operation
IS/IEC 60947-1 : 2007	Low voltage switchgear and controlgear — Part 1: General rules (*first revision*)
IS/IEC 60947-2 : 2003	Low voltage switchgear and controlgear — Part 2: Circuit breakers
IS/IEC 60947-3 : 1999	Low voltage switchgear and controlgear — Part 3: Switches, disconnectors, switch-disconnectors and fuse combination units
IS/IEC 60794-1-1: 2001	Optical fibre cables — Part 1: Generic specification, Section 1 General
IS/IEC 60794-1-2 : 2003	Optical fibre cables — Part 1: Generic specification, Section 2 Basic optical cable test procedures
IS/IEC 60794-2: 2002	Optical fibre cables — Part 2 Sectional specification for indoor cables

13. FILLERS, STOPPERS AND PUTTIES

IS No.	Title
110 : 1983	Specification for ready mixed paint, brushing, grey filler, for enamels, for use over primers (*second revision*)
419 : 1967	Specification for putty for use on window frames (*first revision*)
423 : 1961	Specification for plastic wood, for joiner's filler (*revised*)
3709 : 1966	Specification for mastic cement for bedding of metal windows

IS No.	Title
7164 : 1973	Specification for stopper
13184 : 1991	Specification for mastic filler: epoxy based (two pack)

14. FLOOR COVERING, ROOFING AND OTHER FINISHES

a) Concrete Flooring

IS No.	Title
1237 : 2012	Specification for cement concrete flooring tiles (*second revision*)
6073 : 2006	Specification for autoclaved reinforced cellular concrete floor and roof slabs (*first revision*)
13801 : 2013	Specification for chequered cement concrete tiles (*first revision*)
13990 : 1994	Specification for precast reinforced concrete planks and joists for flooring and roofing
14201 : 1994	Specification for precast reinforced concrete channel units for construction of floors and roofs
15658 : 2006	Specification for precast concrete blocks for paving

b) Flooring Compositions

IS No.	Title
657 : 1982	Specification for materials for use in the manufacture of magnesium oxychloride flooring compositions (*second revision*)
9162 : 1979	Methods of tests for epoxy resin, hardeners and epoxy resin composition for floor topping
9197 : 1979	Specification for epoxy resin, hardness and epoxy resin compositions for floor topping
10132 : 1982	Method of test for materials for use in the preparation of magnesium oxychloride flooring composition

c) Linoleum Flooring

IS No.	Title
653 : 1992	Specification for linoleum sheets and tiles (*third revision*)
9704 : 1980	Methods of tests for linoleum sheets and tiles

d) Rubber Flooring

IS No.	Title
809 : 1992	Specification for rubber flooring materials for general purposes (*first revision*)

e) Stone Flooring

IS No.	Title
1128 : 1974	Specification for limestone (slab and tiles) (*first revision*)
1130 : 1969	Specification for marble (blocks, slabs and tiles)
3316 : 1974	Specification for structural granite (*first revision*)
3622 : 1977	Specification for sand stone (slabs and tiles) (*first revision*)
14223 (Part 1) : 1994	Specification for polished building stones: Part 1 Granite

f) Bituminous Flooring

IS No.	Title
1195 : 2002	Specification for bitumen mastic for flooring (*third revision*)
5317 : 2002	Specification for pitch-mastic for bridge decking and roads (*second revision*)
8374 : 1977	Specification for bitumen mastic, anti-static and electrically conducting grade
9510 : 1980	Specification for bitumen mastic acid resisting grade
13026 : 1991	Specification for bitumen mastic for flooring for industries handling LPG and other light hydrocarbon products
15194 : 2002	Specification for pitch-mastic flooring for industries handling heavy hydrocarbon products like kerosene, diesel and furnace oil

g) Plastic Flooring

IS No.	Title
3461 : 1980	Specification for PVC asbestos floor tiles (*first revision*)
3462 : 1986	Specification for unbacked flexible PVC flooring (*second revision*)
3464 : 1986	Methods of test for plastic flooring and wall tiles (*second revision*)

h) Ceramic/Vitreous Flooring and Wall Finishing

IS No.	Title
2333 : 1992	Specification for plaster of Paris for ceramic industry (*second revision*)
4457 : 2007	Specification for ceramic unglazed vitreous acid resisting tile (*second revision*)
13630	Ceramic tiles — Methods of test, sampling and basis for acceptance
(Part 1) : 2006	Determination of dimensions and surface quality (*first revision*)

IS No.	Title
(Part 2) : 2006	Determination of water absorption and bulk density (*first revision*)
(Part 3) : 2006	Determination of moisture expansion using boiling water — Unglazed tiles (*first revision*)
(Part 4) : 2006	Determination of linear thermal expansion (*first revision*)
(Part 5) : 2006	Determination of resistance to thermal shock (*first revision*)
(Part 6) : 2006	Determination of modulus of rupture and breaking strength (*first revision*)
(Part 7) : 2006	Determination of chemical resistance — Unglazed tiles (*first revision*)
(Part 8) : 2006	Determination of chemical resistance — Glazed tiles (*first revision*)
(Part 9) : 2006	Determination of crazing resistance — Glazed tiles (*first revision*)
(Part 10) : 2006	Determination of frost resistance (*first revision*)
(Part 11) : 2006	Determination of resistance to surface abrasion — Glazed tiles (*first revision*)
(Part 12) : 2006	Determination of resistance to deep abrasion — Unglazed tiles (*first revision*)
(Part 13) : 2006	Determination of scratch hardness of surface according to Mohs'(*first revision*)
(Part 14) : 2006	Determination of impact resistance by measurement of coefficient of restitution
(Part 15) : 2006	Ceramic tiles — Sampling and basis for acceptance
13712 : 2006	Ceramic tiles — Definitions, classifications, characteristics and marking (*first revision*)
15622 : 2006	Specification for pressed ceramic tiles

j) Clay Flooring

IS No.	Title
1478 : 1992	Specification for clay flooring tiles (*second revision*)
3951	Specification for hollow clay tiles for floor and roofs
(Part 1) : 2009	Filler type (*second revision*)
(Part 2) : 2009	Structural type (*second revision*)

k) Roofing

IS No.	Title
277 : 2003	Galvanized steel sheets (plain and corrugated) —Specification (*sixth revision*)
459 : 1992	Specification for corrugated and semi-corrugated asbestos cement sheets (*third revision*)
654 : 1992	Specification for clay roofing tiles, Mangalore pattern (*third revision*)
1464 : 1992	Specification for clay ridge and ceiling tiles (*second revision*)
2690	Specification for burnt clay flat terracing tiles
(Part 1) : 1993	Machine made (*second revision*)
(Part 2) : 1992	Handmade (*second revision*)
3951	Specification for hollow clay tiles for floor and roofs
(Part 1) : 2009	Filler type (*second revision*)
(Part 2) : 2009	Structural type (*second revision*)
6073 : 2006	Specification for autoclaved reinforced cellular concrete floor and roof slabs (*first revision*)
6250 : 1981	Specification for roofing slate tiles (*first revision*)
10388 : 1982	Specification for corrugated coir wood wool cement roofing sheets
12583 : 1988	Specification for corrugated bitumen roofing sheets
12866 : 1989	Specification for plastic translucent sheets made from thermosetting polyester resin (glass fibre reinforced)
13317 : 1992	Specification for clay roofing country tiles, half round and flat tiles
13990 : 1994	Specification for precast reinforced concrete planks and joists for flooring and roofing
14201 : 1994	Specification for precast reinforced concrete channel units for construction of floors and roofs
14241 : 1995	Specification for precast L-Panel units for roofing

m) Other Floorings and Roofings

IS No.	Title
4456	Methods of test for chemical resistant mortars
(Part 1) : 1967	Silicate type and resin type
(Part 2) : 1967	Sulphur type

IS No.	Title
4457 : 2007	Specification for ceramic unglazed vitreous acid resisting tile (*second revision*)
4832	Specification for chemical resistant mortars
(Part 1) : 1969	Silicate type
(Part 2) : 1969	Resin type
(Part 3) : 1968	Sulphur type
4860 : 1968	Specification for acid resistant bricks
14862 : 2000	Specification for fibre cement flat sheets
14143 : 1994	Specification for prefabricated brick panel and partially precast concrete joist for flooring and roofing
14871 : 2000	Specification for products in fibre reinforced cement — Long corrugated or asymmetrical section sheets and fittings for roofing and cladding

n) Wall Coverings/Finishing

IS No.	Title
1542 : 1992	Specification for sand for plaster (*second revision*)
3952 : 2013	Specification for burnt clay hollow bricks and blocks for walls and partitions (*third revision*)
4456	Methods of test for chemical resistant mortars
(Part 1) : 1967	Silicate type and resin type
(Part 2) : 1967	Sulphur type
4832	Specification for chemical resistant mortars
(Part 1) : 1969	Silicate type
(Part 2) : 1969	Resin type
(Part 3) : 1968	Sulphur type
15418 : 2003	Specification for finished wall papers, wall vinyls and plastic wall coverings in roll form

15. GLASS

IS No.	Title
2553 (Part 1) : 1990	Specification for safety glass: Part 1 General purpose (*third revision*)
2835 : 1987	Specification for flat transparent sheet glass (*third revision*)
3438 : 1994	Specification for silvered glass mirrors for general purposes (*second revision*)
5437 : 1994	Specification for figured rolled and wired glass (*first revision*)
14900 : 2000	Specification for transparent float glass

16. GYPSUM BASED MATERIALS

IS No.	Title
2095	Specification for gypsum plaster boards
(Part 1) : 2011	Plain gypsum plaster boards (*third revision*)
(Part 2) : 2001	Coated/laminated gypsum plaster boards (*second revision*)
(Part 3) : 1996	Reinforced gypsum plaster boards (*second revision*)
2542	Methods of test for gypsum plaster, concrete and products
(Part 1/Sec 1) : 1978	Plaster and concrete, Section 1 Normal consistency of gypsum plaster (*first revision*)
(Part 1/Sec 2) : 1978	Plaster and concrete, Section 2 Normal consistency of gypsum concrete (*first revision*)
(Part 1/Sec 3) : 1978	Plaster and concrete, Section 3 Setting time of plaster and concrete (*first revision*)
(Part 1/Sec 4) : 1978	Plaster and concrete, Section 4 Transverse strength of gypsum plaster (*first revision*)
(Part 1/Sec 5) : 1978	Plaster and concrete, Section 5 Compressive strength and dry set density of gypsum plaster (*first revision*)
(Part 1/Sec 6) : 1978	Plaster and concrete, Section 6 Soundness of gypsum plaster (*first revision*)
(Part 1/Sec 7) : 1978	Plaster and concrete, Section 7 Mechanical resistance of gypsum plaster by dropping ball test (*first revision*)
(Part 1/Sec 8) : 1978	Plaster and concrete, Section 8 Freedom from coarse particles (*first revision*)
(Part 1/Sec 9) : 1978	Plaster and concrete, Section 9 Expansion of plaster (*first revision*)
(Part 1/Sec 10) : 1978	Plaster and concrete, Section 10 Sand in set plaster (*first revision*)
(Part 1/Scc 11) : 1978	Plaster and concrete, Section 11 Wood fibre content in gypsum plaster (*first revision*)

IS No.	Title
(Part 1/Sec 12) : 1978	Plaster and concrete, Section 12 Dry bulk density (*first revision*)
(Part 2/Sec 1) : 1981	Gypsum products, Section 1 Measurement of dimensions (*first revision*)
(Part 2/Sec 2) : 1981	Gypsum products, Section 2 Determination of mass (*first revision*)
(Part 2/Sec 3) : 1981	Gypsum products, Section 3 Determination of mass and thickness of paper surfacing (*first revision*)
(Part 2/Sec 4) : 1981	Gypsum products, Section 4 Transverse strength (*first revision*)
(Part 2/Sec 5) : 1981	Gypsum products, Section 5 Compressive strength (*first revision*)
(Part 2/Sec 6) : 1981	Gypsum products, Section 6 Water absorption (*first revision*)
(Part 2/Sec 7) : 1981	Gypsum products, Section 7 Moisture content (*first revision*)
(Part 2/Sec 8) : 1981	Gypsum products, Section 8 Nail retention of precast reinforced gypsum slabs (*first revision*)
2547	Specification for gypsum building plaster
(Part 1) : 1976	Excluding premixed lightweight plaster (*first revision*)
(Part 2) : 1976	Premixed lightweight plaster (*first revision*)
2849 : 1983	Specification for non-load bearing gypsum partition blocks (solid and hollow types) (*first revision*)
8272 : 1984	Specification for gypsum plaster for use in the manufacture of fibrous plasterboards (*first revision*)
9498 : 1980	Specification for inorganic aggregates for use in gypsum plaster
12679 : 1989	Specification for by-product gypsum for use in plaster, blocks and boards

17. MORTAR (INCLUDING SAND FOR MORTAR)

IS No.	Title
2116 : 1980	Specification for sand for masonry mortars (*first revision*)
2250 : 1981	Code of Practice for preparation and use of masonry mortars (*first revision*)
3085 : 1965	Method of test for permeability of cement mortar and concrete
4098 : 1983	Specification for lime-pozzolana mixture (*first revision*)
4456	Methods of test for chemical resistant mortars
(Part 1) : 1967	Silicate type and resin type
(Part 2) : 1967	Sulphur type
4832	Chemical resistant mortars
(Part 1) : 1969	Silicate type
(Part 2) : 1969	Resin type
(Part 3) : 1968	Sulphur type
13077 : 1991	Guide for preparation and use of mud mortar in masonry
14959	Method of test determination of water soluble and acid soluble chlorides in mortar and concrete
(Part 1) : 2001	Fresh mortar and concrete
(Part 2) : 2001	Hardened mortar and concrete

18. PAINTS AND ALLIED PRODUCTS

a) Water Based Paints and Pigments

IS No.	Title
427 : 2013	Specification for distemper, dry, colour as required (*third revision*)
428 : 2013	Specification for washable distemper (*third revision*)
5410 : 2013	Specification for cement paint (*second revision*)
15489 : 2013	Specification for paint, plastic emulsion (*first revision*)

b) Ready Mixed Paints, Enamels and Powder Coatings

IS No.	Title
101	Methods of sampling and test for paints, varnishes and related products
(Part 1/Sec 1) : 1986	Test on liquid paints (general and (general and physical), Section 1 Sampling (*third revision*)
(Part 1/Sec 2) : 1987	Test on liquid paints (general and physical), Section 2 Preliminary examination and preparation of samples for testing (*third revision*)
(Part 1/Sec 3) : 1986	Test on liquid paints (general and physical), Section 3 Preparation of panels (*third revision*)
(Part 1/Sec 4) : 1987	Test on liquid paints (general and physical), Section 4 Brushing test (*third revision*)

IS No.	Title
(Part 1/Sec 5) : 1989	Test on liquid paints (general and physical), Section 5 Consistency (*third revision*)
(Part 1/Sec 6) : 1987	Test on liquid paints (general and physical), Section 6 Flash point (*third revision*)
(Part 1/Sec 7) : 1987	Test on liquid paints (general and physical), Section 7 Mass per 10 litres (*third revision*)
(Part 2/Sec 1) : 1988	Test on liquid paints (Chemical examination), Section 1 Water content (*third revision*)
(Part 2/Sec 2) : 1986	Test on liquid paints (Chemical examination), Section 2 Volatile matter (*third revision*)
(Part 3/Sec 1) : 1986	Tests on paint film formation, Section 1 Drying time (*third revision*)
(Part 3/Sec 2) : 1989	Tests on paint film formation, Section 2 Film thickness (*third revision*)
(Part 3/Sec 4) : 1987	Tests on paint film formation, Section 4 Finish (*third revision*)
(Part 3/Sec 5) : 1987	Tests on paint film formation, Section 5 Fineness of grind (*third revision*)
(Part 4/Sec 1) : 1988	Optical test, Section 1 Opacity (*third revision*)
(Part 4/Sec 2) : 1989	Optical test, Section 2 Colour (*third revision*)
(Part 4/Sec 3) : 1988	Optical test, Section 3 Light fastness test (*third revision*)
(Part 4/Sec 4) : 1988	Optical test, Section 4 Gloss (*third revision*)
(Part 5/Sec 1) : 1988	Mechanical test on paint films, Section 1 Hardness tests (*third revision*)
(Part 5/Sec 2) : 1988	Mechanical test on paint films, Section 2 Flexibility and adhesion (*third revision*)
(Part 5/Sec 3) : 1999	Mechanical test on paint films, Section 3 Impact resistance (*fourth revision*)
(Part 5/Sec 4) : 1988	Mechanical test on paint films, Section 4 Print free test (*third revision*)
(Part 6/Sec 1) : 1988	Durability tests, Section 1 Resistance to humidity under conditions of condensation (*third revision*)
(Part 6/Sec 2) : 1989	Durability tests, Section 2 Keeping properties (*third revision*)
(Part 6/Sec 3) : 1990	Durability tests, Section 3 Moisture vapour permeability (*third revision*)
(Part 6/Sec 4) : 1991	Durability tests, Section 4 Degradation of coatings (pictorial aids for evaluation) (*third revision*)
(Part 6/Sec 5) : 1997	Durability tests, Section 5 Accelerated weathering test
(Part 7/Sec 1) : 1989	Environmental tests on paint films, Section 1 Resistance to water (*third revision*)
(Part 7/Sec 2) : 1989	Environmental tests on paint films, Section 2 Resistance to liquids (*third revision*)
(Part 7/Sec 3) : 1990	Environmental tests on paint films, Section 3 Resistance to heat (*third revision*)
(Part 7/Sec 4) : 1990	Environmental tests on paint films, Section 4 Resistance to bleeding of pigments (*third revision*)
(Part 8/Sec 1) : 1989	Tests for pigments and other solids, Section 1 Residue on sieve (*third revision*)
(Part 8/Sec 2) : 1990	Tests for pigments and other solids, Section 2 Pigments and non–volatile matter (*third revision*)
(Part 8/Sec 3) : 1993	Tests for pigments and other solids, Section 3 Ash content (*third revision*)
(Part 8/Sec 4) : 2015	Tests for pigments and other solids, Section 4 Phthalic anhydride (*fourth revision*)
(Part 8/Sec 5) : 1993	Tests for pigments and other solids, Section 5 Lead restriction test (*third revision*)
(Part 8/Sec 6) : 1993	Tests for pigments and other solids, Section 6 Volume solids
(Part 9/Sec 1) : 1993	Tests for lacquers and varnish, Section 1 Acid value (*third revision*)
(Part 9/Sec 2) : 1993	Tests for lacquers and varnish, Section 2 Rosin test (*third revision*)
104 : 1979	Specification for ready mixed paint, brushing, zinc chrome, priming (*second revision*)

IS No.	*Title*
109 : 1968	Specification for ready mixed paint, brushing, priming, plaster to Indian Standard colours No. 361 and 631 (*first revision*)
133 : 2004	Specification for enamel, interior (a) undercoating, (b) finishing (*fourth revision*)
133 (Part 1) : 2013	Specification for enamel, interior (a) undercoating, (b) finishing : Part 1 For household and decorative purposes (*fifth revision*)
137 : 1965	Specification for ready mixed paint, brushing, matt or egg-shell flat, finishing, interior, to Indian Standard colour, as required (*revised*)
158 : 2015	Specification for ready mixed paint, brushing, bituminous, black, lead-free, acid, alkali, and heat resisting (*fourth revision*)
164 : 1981	Specification for ready mixed paint for road marking (*second revision*)
168 : 1993	Specification for ready mixed paint, air-drying semi-glossy/matt, for general purposes (*third revision*)
341 : 1973	Specification for black Japan, Types A, B and C (*first revision*)
2074 : 1992	Specification for ready mixed paint, air drying red oxide-zinc chrome, priming (*second revision*)
2075 : 2000	Specification for ready mixed paint, stoving, red oxide-zinc chrome, priming (*second revision*)
2339 : 2013	Specification for aluminium paint for general purposes (*first revision*)
2932 (Part 1) : 2013	Specification for enamel, synthetic, exterior (a) undercoating, (b) finishing: Part 1 For household and decorative applications (*fourth revision*)
2933 (Part 1) : 2013	Specification for enamel, exterior: (a) undercoating (b) finishing: Part 1 for domesic and decorative applications
3536 : 1999	Specification for ready mixed paint, brushing, wood primer (*first revision*)
3537 : 1966	Specification for ready mixed paint, finishing, interior for general purposes, to Indian Standard colours No. 101, 216, 217, 219, 275, 281, 352, 353, 358 to 361, 363, 364, 388, 410, 442, 444, 628, 631, 632, 634, 693, 697, white and black
3539 : 1966	Specification for ready mixed paint, undercoating, for use under oil finishes, to Indian Standard colours, as required
3585 : 1966	Specification for ready mixed paint, aluminium, brushing, priming, water resistant, for wood work
3678 : 1966	Specification for ready mixed paint, thick white, for lettering
9862 : 1981	Specification for ready mixed paint, brushing, bituminous black lead free, acid, alkali, water and chlorine resisting
11883 : 1986	Specification for ready mixed paint, brushing, red oxide, priming for metals
12744 (Part 1) : 2013	Specification for ready mixed paint, air drying, red oxide, zinc phosphate, priming: Part 1 for domestic and decorative applications (*fourth revision*)
13183 : 1991	Specification for aluminium paints, heat resistant
13213 : 1991	Specification for polyurethane full gloss enamel (two pack)
13607 : 1992	Specification for ready mixed paint, finishing, general purposes, synthetic
13871 : 1993	Specification for powder coatings
14506 : 1998	Specification for epoxy redoxide zinc phosphate weldable primer, two component
14589 : 1999	Specification for zinc priming paint, epoxy based, two pack

c) Thinners and Solvents

IS No.	*Title*
82 : 1973	Methods of sampling and test for thinners and solvents for paints (*first revision*)
430 : 1972	Paint remover, solvent type, non-flammable (*second revision*)
431 : 1972	Paint remover, solvent type, flammable (second revision)
533 : 2007	Specification for gum spirit of turpentine (oil of turpentine) (*third revision*)

IS No.	Title
5667 : 1970	Specification for thinner for cellulose nitrate based paints and lacquers
14314 : 1995	Specification for thinner general purposes for synthetic paints and varnishes

d) Varnishes and Lacquers

IS No.	Title
337 : 1975	Specification for varnish, finishing, interior (*first revision*)
344 : 1976	Specification for varnish, stoving (*first revision*)
347 : 1975	Specification for varnish, shellac, for general purposes (*first revision*)
348 : 1968	Specification for French polish (*first revision*)
524 : 1983	Specification for varnish, finishing, exterior, synthetic (*second revision*)
525 : 1968	Specification for varnish, finishing, exterior and general purposes (*first revision*)
642 : 1963	Specification for varnish medium for aluminium paint (*revised*)
10018 : 1981	Specification for lacquer, cellulose, nitrate clear, finishing, glossy for wood

19. POLYMERS, PLASTICS AND GEOSYNTHETICS/GEOTEXTILES

IS No.	Title
1998 : 1962	Methods of test for thermosetting synthetic resin bonded laminated sheets
2036 : 1995	Specification for phenolic laminated sheets (*second revision*)
2046 : 1995	Specification for decorative thermosetting synthetics resin bonded laminated sheets (*second revision*)
2076 : 1981	Specification for unsupported polyvinyl chloride sheeting (*first revision*)
2508 : 1984	Specification for low density polyethylene films (*second revision*)
6307 : 1985	Specification for rigid PVC sheets (*first revision*)
10889 : 2004	Specification for high density polyethylene films (*first revision*)
12830 : 1989	Specification for rubber based adhesives for fixing PVC tiles to cement
13162	Methods of test for geotextiles
(Part 2) : 1991	Determination of resistance to exposure of ultra-violet light and water (Xenon arc type apparatus)
(Part 3) : 1992	Determination of thickness at specified pressure
(Part 4) : 1992	Determination of puncture resistance by falling cone method
(Part 5) : 1992	Determination of tensile properties using a wide width strip
13262 : 1992	Specification for pressure sensitive adhesive tapes with plastic base
13325 : 1992	Method of test for the determination to tensile properties of extruded polymer geogrids using the wide strip
13326 (Part 1) : 1992	Method of test for the evaluation of interface friction between geosynthetics and soil: Part 1 Modified direct shear technique
14182 : 1994	Specification for solvent cement for use with unplasticized polyvinyl-chloride plastic pipe and fittings
14293 : 1995	Method of test for trapezoid tearing – Geotextiles
14294 : 1995	Method of determination of apparent opening size by dry sieving technique – Geotextiles
14324 : 1995	Method of test for determination of water permeability-permittivity — Geotextiles
14443 : 1997	Specification for polycarbonate sheets
14500 : 1998	Specification for linear low-density polyethylene (LLDPE) films
14643 : 1999	Specification for unsintered polytetrafluoroethylene (PTFE) tape for thread sealing applications
14706 : 1999	Sampling and preparation of test specimen of geotextiles
14714 : 1999	Determination of abrasion resistance of geotextiles
14715 : 2000	Specification for woven jute geotextiles
14716 : 1999	Determination of mass per unit area of geotextiles
14739 : 1999	Methods for determination of creep of geotextiles
14753 : 1999	Specification for poly(methyl) methacrylate (PMMA) (Acrylic) sheets

IS No.	*Title*
14986 : 2001	Jute geo-grid for rain water erosion control in road and railway embankments and hill slopes
15060 : 2001	Tensile test for joints/seams by wide width method of geotextiles
15351 : 2015	Specification for textiles — Laminated high density polyethylene (HDPE) woven fabric (geo-membrane) for waterproof lining (*second revision*)

20. SANITARY APPLIANCES AND WATER FITTINGS

a) General

IS No.	*Title*
782 : 1978	Specification for caulking lead (*third revision*)
804 : 1967	Specification for rectangular pressed steel tanks (*first revision*)
1726 : 1991	Specification for cast iron manhole covers and frames (*third revision*)
2963 : 2013	Specification for copper alloy waste fittings and waste plug for wash-basins and sinks (*second revision*)
5219 : 2013	Specification for cast copper alloy traps (*first revision*)
5455 : 1969	Specification for cast-iron steps for manholes
5961 : 1970	Specification for cast iron gratings for drainage purposes
9140 : 1996	Method of sampling of vitreous and fire clay sanitary appliances (*second revision*)
9872 : 1981	Specification for precast concrete septic tanks
12592 : 2002	Specification for precast concrete manhole covers and frames (*first revision*)
12701 : 1996	Specification for rotational moulded polyethylene water storage tanks (*first revision*)
13356 : 1992	Specification for precast ferrocement water tanks (250 to 10 000 litres capacity)
14399	Hot press moulded thermosetting glass fibre reinforced (GRP) sectional water storage tanks
(Part 1) : 1996	Specification for panels
(Part 2) : 1996	Guidelines for assembly, installation and testing

b) Pipes and Fittings excluding valves

i) Brass and Copper Pipes and Fittings

IS No.	*Title*
407 : 1981	Specification for brass tubes for general purposes (*third revision*)
2501 : 1995	Specification for solid drawn copper tubes for general engineering purposes (*third revision*)

ii) *Cast Iron Pipes and Fittings*

IS No.	*Title*
1536 : 2001	Specification for centrifugally cast (spun) iron pressure pipes for water, gas and sewage (*fourth revision*)
1537 : 1976	Specification for vertically cast iron pressure pipes for water, gas and sewage (*first revision*)
1538 : 1993	Specification for cast iron fittings for pressure pipes for water, gas and sewage (*third revision*)
1729 : 2002	Cast iron/ductile iron drainage pipes and pipe fittings for over ground non-pressure pipeline socket and spigot series (*second revision*)
1879 : 2010	Specification for malleable cast iron pipe fittings (*third revision*)
3989: 2009	Specification for centrifugally cast (spun) iron spigot and socket soil, waste and ventilating pipes, fittings and accessories (*third revision*)
5531: 2014	Specification for cast iron specials for asbestos-cement pressure pipes for water, gas and sewage (*third revision*)
6418 : 1971	Specification for cast iron and malleable cast iron flanges for general engineering purposes
7181 : 1986	Specification for horizontally cast iron double flanged pipes for water, gas and sewage (*first revision*)
8329 : 2000	Specification for centrifugally cast (spun) ductile iron pressure pipes for water, gas and sewage (*third revision*)
8794 : 1988	Specification for cast iron detachable joints for use with asbestos cement pressure pipes (*first revision*)
9523 : 2000	Specification for ductile iron fittings for pressure pipes for water, gas and sewage (*first revision*)

IS No.	Title
10292 : 1988	Dimensional requirements for rubber sealing rings for C.I.D. Joints in asbestos cement piping (*first revision*)
10299 : 1982	Cast iron saddle pieces for service connection from asbestos cement pressure pipes
11606 : 1986	Methods of sampling cast iron pipes and fittings
12820 : 2004	Dimensional requirements of rubber gaskets for mechanical joints and push-on joints for use with cast iron pipes and fittings for carrying water, gas and sewage (*first revision*)
12987 : 1991	Cast iron detachable joints for use with asbestos cement pressure pipes (light duty)
12988 : 1991	Rubber sealing rings for CID joints for light duty AC pipes — Dimensional requirements
13382 : 2004	Specification for cast iron specials for mechanical and push-on flexible joints for pressure pipelines for water, gas and sewage (*first revision*)
15905 : 2011	Specification for hubless centrifugally cast (spun) iron pipes, fittings and accessories — Spigot series

iii) *Lead Pipes and Fittings*

IS No.	Title
404 (Part 1) : 1993	Specification for lead pipes: Part 1 For other than chemical purpose (*third revision*)

iv) *Fibre Pipes and Fittings*

IS No.	Title
11925 : 1986	Specification for pitch-impregnated fibre pipes and fittings for drainage purposes

v) *Plastic Pipes and Fittings*

IS No.	Title
4984 : 1995	Specification for high density polyethylene pipes for water supply (*fourth revision*)
4985 : 2000	Specification for unplasticized PVC pipes for potable water supplies (*third revision*)
7834	Specification for injection moulded PVC socket fittings with solvent cement joints for water supplies
(Part 1) : 1987	General requirements (*first revision*)
(Part 2) : 1987	Specific requirements for 45° elbows (*first revision*)
(Part 3) : 1987	Specific requirements for 90° elbows (*first revision*)
(Part 4) : 1987	Specific requirements for 90° tees (*first revision*)
(Part 5) : 1987	Specific requirements for 45° tees (*first revision*)
(Part 6) : 1987	Specific requirements for sockets (*first revision*)
(Part 7) : 1987	Specific requirements for unions (*first revision*)
(Part 8) : 1987	Specific requirements for caps (*first revision*)
8008	Specification for injection moulded high density polyethylene (HDPE) fittings for potable water supplies
(Part 1) : 2003	General requirements
(Part 2) : 2003	Specific requirements for 90° bends (*first revision*)
(Part 3) : 2003	Specific requirements for 90° tees
(Part 4) : 2003	Specific requirements for reducers
(Part 5) : 2003	Specific requirements for ferrule reducers (*first revision*)
(Part 6) : 2003	Specific requirements for pipe ends
(Part 7) : 2003	Specific requirements for sandwich flanges
(Part 8) : 2003	Specific requirements for reducing tests
(Part 9) : 2003	Specific requirements for end caps (*first revision*)
8360	Specification for fabricated high density polyethelene (HDPE) fittings for potable water supplies
(Part 1) : 1977	General requirements
(Part 2) : 1977	Specific requirements for 90° tees
(Part 3) : 1977	Specific requirements for 90° bends
10124	Specification for fabricated PVC-U fittings for potable water supplies
(Part 1) : 2009	General requirements (*second revision*)
(Part 2) : 2009	Specific requirements for sockets (*second revision*)
(Part 3) : 2009	Specific requirements of straight reducers (*second revision*)
(Part 4) : 2009	Specific requirements for caps (*second revision*)
(Part 5) : 2009	Specific requirements for equal tees (*second revision*)

IS No.	Title
(Part 6) : 2009	Specific requirements for flanged tail piece with metallic flanges (*second revision*)
(Part 7) : 2009	Specific requirements for threaded adaptors (*second revision*)
(Part 8) : 2009	Specific requirements for 90° bends (*second revision*)
(Part 9) : 2009	Specific requirements for 60° bends (*second revision*)
(Part 10) : 2009	Specific requirements for 45° bends (*second revision*)
(Part 11) : 2009	Specific requirements for 30° bends (*second revision*)
(Part 12) : 2009	Specific requirements for 22½° bends (*second revision*)
(Part 13) : 2009	Specific requirements for 11¼° bends (*second revision*)
12235	Methods of test for unplasticised PVC pipes for potable water supplies
(Part 1) : 2004	Measurement of dimensions (*first revision*)
(Part 2) : 2004	Determination of Vicat softening temperature (*first revision*)
(Part 3) : 2004	Test for opacity (*first revision*)
(Part 4) : 2004	Determining the detrimental effect on the composition of water (*first revision*)
(Part 5/Sec 1) : 2004	Longitudinal reversion, Section 1 Determination methods (*first revision*)
(Part 5/Sec 2) : 2004	Reversion test, Section 2 Determination parameters (*first revision*)
(Part 6) : 2004	Stress relief test (*first revision*)
(Part 7) : 2004	Resistance to sulphuric acid (*first revision*)
(Part 8/Sec 1) : 2004	Resistance to internal hydrostatic pressure, Section 1 Resistance to internal hydrostatic pressure at constant internal water pressure (*first revision*)
(Part 8/Sec 2) : 2004	Resistance to internal hydrostatic pressure, Section 2 Leak-tightness of elastomeric sealing ring type socket joints under positive internal pressure and with angular deflection (*first revision*)
(Part 8/Sec 3) : 2004	Resistance to internal hydrostatic pressure, Section 3 Leak-tightness of elastomeric sealing ring type socket joints under negative internal pressure and with angular deflection (*first revision*)
(Part 8/Sec 4) : 2004	Resistance to internal hydrostatic pressure, Section 4 Leak-tightness of elastomeric sealing ring type socket joints under positive internal pressure without angular deflection (*first revision*)
(Part 9) : 2004	Resistance to external blows (impact resistance) at 0°C (Round-the-clock method)
(Part 10) : 2004	Determination of organotin as tin aqueous solution (*first revision*)
(Part 11) : 2004	Resistance to dichloromethane at specified temperature (*first revision*)
(Part 12) : 2004	Determination of titanium dioxide content
(Part 13) : 2004	Determination of tensile strength and elongation
(Part 14) : 2004	Determination of density/relative density (specific gravity)
(Part 15) : 2004	Determination of vinyl chloride monomer content
(Part 16) : 2004	High temperature test
(Part 17) : 2004	Determination of ash content and sulphated ash content
(Part 18) : 2004	Determination of ring stiffness
(Part 19) : 2004	Flattening test
12709 : 1994	Specification for glass-fibre reinforced plastic (GRP) pipes joints and fittings for use for potable water supply (*first revision*)
12818 : 2010	Specification for unplasticized polyvinyl chloride(PVC-U) screen and casing pipes for bore/tubewells (*second revision*)
13592 : 2013	Specification for unplasticized polyvinyl chloride (PVC-U) pipes for soil and waste discharge system for inside and outside buildings including ventilation and rainwater system (*first revision*)
14333 : 1996	Specification for high density polyethylene pipes for sewerage
14402 : 1996	Specification for GRP pipes, joints and fittings for use for sewerage, industrial waste and water (other than potable)

IS No.	Title
14735 : 1999	Specification for unplasticized polyvinyl chloride (UPVC) injection moulded fittings for soil and waste discharge system for inside and outside buildings including ventilation and rain water system
14885 : 2001	Specification for polyethylene pipe for supply of gaseous fuel
15328 : 2003	Specification for unplasticized non-pressure polyvinyl chloride (PVC-U) pipes for use in underground drainage and sewerage system
15450 : 2004	Specification for polyethylene/ aluminium/polyethylene composite pressure pipes for hot and cold water supplies
15778 : 2007	Specification for chlorinated polyvinyl chloride (CPVC) pipes for potable hot and cold water distribution supplies
15801 : 2008	Specification for polypropylene-random copolymer pipes for hot and cold water supplies
15927	Specification for polyethylene fittings for use with polyethylene pipes for the supply of gaseous fuels
(Part 1) : 2012	Fittings for sockets using heated tools
(Part 2) : 2012	Spigot fittings for butt fusion jointing or socket fusion using heated tools, spigot fittings for use with electro-fusion fittings
(Part 3) : 2011	Electro-fusion fittings
16098	Specification for structured - wall plastics piping systems for non-pressure drainage and sewerage
(Part 1) : 2013	Pipes and fittings with smooth external surface, Type A
(Part 2) : 2013	Pipes and fittings with non-smooth external surface, Type B

vi) *Steel Tubes, Pipes and Fittings*

IS No.	Title
1239	Specification for steel tubes, tubular and other wrought steel fittings
(Part 1) : 2004	Steel tubes (*sixth revision*)
(Part 2) : 2011	Steel pipe fittings (*fifth revision*)
3589 : 2001	Specification for steel pipes for water and sewage (168.3 to 2 540 mm outside diameter) (*third revision*)
4270 : 2001	Specification for steel tubes used for water wells (*third revision*)
5504 : 1997	Specification for spiral welded pipes (*first revision*)
6286 : 1979	Seamless and welded steel pipe for sub-zero temperature service
6392 : 1971	Steel pipe flanges

vii) *Stoneware Pipes and Fittings*

IS No.	Title
651 : 2007	Specification for glazed stoneware pipes and fittings (*sixth revision*)
3006 : 1979	Specification for chemically resistant glazed stoneware pipes and fittings (*first revision*)

viii) *Asbestos Cement Pipes*

[See 8 (a) (ii) under the category 'Composite Matrix Products']

ix) *Concrete Pipes and Pipes lined/coated with Concrete or Mortar*

[See 8 (a) (iv) under the category 'Composite Matrix Products']

c) Kitchen and Sanitary Appliances

IS No.	Title
771	Specification for glazed fire clay sanitary appliances
(Part 1) : 1979	General requirements (*second revision*)
(Part 2) : 1985	Specific requirements of kitchen and laboratory sinks (*third revision*)
(Part 3/Sec 1) : 1979	Specific requirements of urinals, Section 1 Slab urinals (*second revision*)
(Part 3/Sec 2) : 1985	Specific requirements of urinals, Section 2 Stall urinals (*third revision*)
(Part 4) : 1979	Specific requirements of post mortom slabs (*second revision*)
(Part 5) : 1979	Specific requirements of shower trays (*second revision*)
(Part 6) : 1979	Specific requirements of bed-pan sinks (*second revision*)
(Part 7) : 1981	Specific requirements of slop sinks (*second revision*)
772 : 1973	Specification for general requirements of enamelled cast.iron sanitary appliances (*second revision*)
774 : 2004	Specification for flushing cisterns for water-closets and urinals (other than plastic cisterns) (*fifth revision*)
2326 : 1987	Specification for automatic flushing cisterns for urinals (*second revision*)

IS No.	Title
2548	Specification for plastic seats and covers for water-closets
(Part 1) : 1996	Thermoset seats and covers (*fifth revision*)
(Part 2) : 1996	Thermoplastic seats and covers (*fifth revision*)
2556	Specification for vitreous sanitary appliances (vitreous china)
(Part 1) : 1994	General requirements (*third revision*)
(Part 2) : 2004	Specific requirements of wash-down water-closets (*fifth revision*)
(Part 3) : 2004	Specific requirements of squatting pans (*fifth revision*)
(Part 4) : 2004	Specific requirements of wash basins (*fourth revision*)
(Part 5) : 1994	Specific requirements of laboratory sinks (*third revision*)
(Part 6) : 1995	Specific requirements of urinals and partition plates (*fourth revision*)
(Part 7) : 1995	Specific requirements of accessories for sanitary appliances (*third revision*)
(Part 8) : 2004	Specific requirements of pedestal close coupled wash-down and syphonic water closets (*fifth revision*)
(Part 9) : 2004	Specific requirements of pedestal type bidets (*fifth revision*)
(Part 14): 1995	Specific requirements of integrated squatting pans (*first revision*)
(Part 15) : 2004	Specific requirements of universal water closets (*second revision*)
(Part 16) : 2002	Specific requirements for wash down wall mounted water closets
(Part 17) : 2001	Specific requirements for wall mounted bidets
6411 : 1985	Specification for gel-coated glass fibre reinforced polyester resin bath tubs (*first revision*)
7231 : 1994	Specification for plastic flushing cisterns for water-closets and urinals (*second revision*)
11246 : 1992	Specification for glass fibre reinforced polyester resins (GRP) squatting pans (*first revision*)
13983 : 1994	Specification for stainless steel sinks for domestic purposes

d) Valves and Water Fittings (including Ferrules)

IS No.	Title
778 : 1984	Specification for copper alloy gate, globe, and check valves for water works purposes (*fourth revision*)
781 : 1984	Specification for cast copper alloy screw-down bib taps and stop valves for water services (*third revision*)
1701 : 1960	Specification for mixing valves for ablutionary and domestic purposes
1703 : 2000	Specification for water fittings — Copper alloy float valves (horizontal plunger type) (*fourth revision*)
1711 : 1984	Specification for self-closing taps for water supply purposes (*second revision*)
1795 : 1982	Specification for pillar taps for water supply purposes (*second revision*)
2692 : 1989	Specification for ferrules for water services (*second revision*)
3004 : 1979	Specification for plug cocks for water supply purposes (*first revision*)
3042 : 1965	Specification for single faced sluice gates (200 to 1 200 mm size)
3950 : 1979	Specification for surface boxes for sluice valves (*first revision*)
4038 : 1986	Specification for foot valves for water works purposes (*second revision*)
4346 : 1982	Specification for washers for use with fittings for water services (*first revision*)
5312	Specification for swing check type reflux (non-return) valves
(Part 1) :2004	Single door pattern (*second revision*)
(Part 2) :2013	Multi-door pattern (*first revision*)
8931 : 1993	Specification for cast copper alloy fancy single tap combination tap and stop valves for water services (*first revision*)
9338 : 2013	Specification for cast iron/S.G. iron, cast steel screw-down stop valves for water works purposes (*second revision*)
9739 : 1981	Specification for pressure reducing valves for domestic water supply systems
9758 : 1981	Specification for flush valves and fittings for water-closets and urinals
9762 : 1994	Specification for polyethylene floats (spherical) for float valves (*first revision*)

IS No.	Title
9763 : 2000	Specification for plastic bib taps, pillar taps, angle valves, hot and cold water services (*second revision*)
12234 : 1988	Specification for plastic equilibrium float valve for cold water services
13049 : 1991	Specification for diaphragm type (plastic body) float operated valves for cold water services
13114 : 1991	Specification for forged brass gate, globe and check valves for water works purposes
13349 : 1992	Specification for single faced cast iron thimble mounted sluice gates
14845 : 2000	Specification for resilient seated cast iron air relief valves for water works purposes
14846 : 2000	Specification for sluice valves for water works purposes (50-1 200 mm)

e) Water Meters

IS No.	Title
779 : 1994	Specification for water meters (domestic type) (*sixth revision*)
2373 : 1981	Specification for water meters (bulk type) (*third revision*)
6784 : 1996	Method for performance testing of water meters (domestic type) (*second revision*)

21. STEEL AND ITS ALLOYS (*See* 23 FOR STRUCTURAL SECTIONS)

a) General

IS No.	Title
1030 : 1998	Carbon steel castings for general engineering purposes (*fifth revision*)
1136 : 2008	Preferred sizes for wrought metal products (*third revision*)
1762 (Part 1) : 1974	Code for designation of steels: Part 1 Based on letter symbols (*first revision*)
2049 : 1978	Colour code for the identification of wrought steel for general engineering purposes (*first revision*)
2644 : 1994	High tensile steel castings (*fourth revision*)
2708 : 1993	Specification for 1.5 percent manganese steel castings for general engineering purposes (*third revision*)
7598 : 1990	Classification of steels (*first revision*)
10461	Resistance to inter-granular corrosion of austenitic stainless steels — Method for determination
(Part 1) : 1994	Corrosion test in nitric acid medium by measurement of loss in mass (Huey test) (*first revision*)
(Part 2) : 1994	Corrosion test in a sulphuric acid/ copper sulphate medium in the presence of copper turnings (Monypenny Strauss Test) (*first revision*)

b) Structural Steel

IS No.	Title
2062 : 2011	Specification for hot rolled medium and high tensile structural steel (*seventh revision*)
2830 : 2012	Specification for carbon steel cast billet ingots, billets, blooms and slabs for re-rolling into steel for general structural purposes (*third revision*)
2831 : 2012	Specification for carbon steel cast billets ingots, blooms and slabs for re-rolling into structural steel (Ordinary quality) (*fourth revision*)
8052 : 2006	Specification for steel ingots, billets and blooms for the production of springs, rivets and screws for general engineering applications (*second revision*)
8952 : 1995	Steel ingots, blooms and billets for production of mild steel wire rods for general engineering purposes (*first revision*)
11587 : 1986	Specification for structural weather resistant steels
15103 : 2002	Fire resistant steel
15911 : 2010	Structural steel (Ordinary quality)
15962 : 2012	Structural steels for buildings and structures with improved seismic resistance

c) Sheet and Strip

IS No.	Title
277 : 2003	Specification for galvanized steel sheets (plain and corrugated) (*sixth revision*)
412 : 1975	Specification for expanded metal steel sheets for general purposes (*second revision*)
513 : 2008	Specification for cold reduced low carbon steel sheets and strips (*fifth revision*)

IS No.	Title
1079 : 2009	Specification for hot rolled carbon steel sheet and strip (*sixth revision*)
6911 : 1992	Stainless steel plate, sheet and strip (*first revision*)
7226 : 1974	Specification for cold rolled medium, high carbon and low alloy steel strip for general engineering purposes
14246 : 2013	Specification for continuously pre-painted galvanized steel sheets and coils (*first revision*)
15961 : 2012	Hot-dip
15965 : 2012	Pre-painted aluminium zinc alloy metallic coated steel strip and sheet (plain)
12313: 1988	Specification for hot-dip terne coated carbon steel sheets

d) Bars, Rods, Wire and Wire Rods

IS No.	Title
280 : 2006	Specification for mild steel wire for general engineering purposes (*fourth revision*)
1148 : 2009	Steel rivet bars (medium and high tensile) for structural purposes (*fourth revision*)
1673 : 1984	Specification for mild steel wire cold heading quality (*second revision*)
1812 : 1982	Specification for carbon steel wire for the manufacture of wood screw (*second revision*)
1835 : 1976	Specification for round steel wire for ropes (*third revision*)
1875 : 1992	Carbon steel billets, blooms, slabs and bars for forgings (*fifth revision*)
1921 : 2005	Specification for resin cored solder wire (*second revision*)
2591 : 1982	Dimensions for hot rolled bars for threaded components (*second revision*)
3150 : 1982	Specification for hexagonal wire netting for general purposes
4826 : 1979	Specification for hot-dipped galvanized coatings on round steel wires (*first revision*)
6527 : 1995	Stainless steel wire rod (*first revision*)
6528 : 1995	Specification for stainless steel wire (*first revision*)
6603 : 2001	Specification for stainless steel bars and flats (*first revision*)
7887 : 1992	Specification for mild steel wire rods for general engineering purposes (*first revision*)
7904 : 1995	Specification for high-carbon steel wire rods (*first revision*)
10631 : 1983	Stainless steel for welding electrode core wire
IS/ISO 16124 : 2004	Steel wire rod — Dimensions and tolerances

e) Plates and Studs

IS No.	Title
1862 : 1975	Specification for studs (*second revision*)
3502 : 2009	Specification for steel chequered plates (*third revision*)

f) Tubes and Tubulars

IS No.	Title
1161 : 2014	Specification for steel tubes for structural purposes (*fifth revision*)
4923 : 1997	Specification for hollow mild steel sections for structural use (*second revision*)

g) Slotted Sections

IS No.	Title
8081 : 1976	Specification for slotted sections

22. STONES

IS No.	Title
1121	Methods of test for determination of strength properties of natural building stones
(Part 1) : 2013	Compressive strength (*second revision*)
(Part 2) : 2013	Transverse strength (*second revision*)
(Part 3) : 2012	Tensile strength (*second revision*)
(Part 4) : 2013	Shear strength (*second revision*)
1122 : 1974	Method of test for determination of true specific gravity of natural building stones (*first revision*)
1123 : 1975	Method of identification of natural building stones (*first revision*)
1124 : 1974	Method of test for determination of water absorption, apparent specific gravity and porosity of natural building stones (*first revision*)
1125 : 2013	Method of test for determination of weathering of natural building stones (*second revision*)
1126 : 2013	Method of test for determination of durability of natural building stones (*second revision*)

IS No.	Title
1127 : 1970	Recommendations for dimensions and workmanship of natural building stones for masonry work (*first revision*)
1128 : 1974	Specification for limestone (slab and tiles) (*first revision*)
1129 : 1972	Recommendation for dressing of natural building stones (*first revision*)
1130 : 1969	Specification for marble (blocks, slabs and tiles)
1706 : 1972	Method of determination of resistance to wear by abrasion of natural building stones (*first revision*)
3316 : 1974	Specification for structural granite (*first revision*)
3620 : 1979	Specification for laterite stone block for masonry (*first revision*)
3622 : 1977	Specification for sand stone (slabs and tiles) (*first revision*)
4121 : 1967	Method of test for determination of water transmission rate by capillary action through natural building stones
4122 : 1967	Method of test for surface softening of natural building stones by exposure to acidic atmospheres
4348 : 1973	Methods of test for determination of permeability of natural building stones (*first revision*)
5218 : 1969	Method of test for toughness of natural building stones
5640 : 1970	Method of test for determining the aggregate impact value of soft coarse aggregates
6241 : 1971	Method of test for determination of stripping value of road aggregates
6250 : 1981	Specification for roofing slate tiles (*first revision*)
6579 : 1981	Specification for coarse aggregate for water bound macadam (*first revision*)
7779	Schedule for properties and availability of stones for construction purposes
(Part 1/ Sec 1) : 1975	Gujarat state, Section 1 Availability of stones
(Part 1/ Sec 2) : 1975	Gujarat state, Section 2 Engineering properties of building stones
(Part 1/Sec 3) : 1975	Gujarat state, Section 3 Engineering properties of stone aggregates
(Part 2/ Sec 1) : 1979	Maharashtra state, Section 1 Availability of stones
(Part 2/ Sec 2) : 1979	Maharashtra state, Section 2 Engineering properties of building stones
(Part 2/ Sec 3) : 1979	Maharashtra state, Section 3 Engineering properties of stone aggregates
(Part 3/ Sec 2) : 1990	Tamil Nadu state, Section 2 Engineering properties of building stones
(Part 3/ Sec 3) : 1980	Tamil Nadu state, Section 3 Engineering properties of stone aggregates
(Part 4/Sec 1 to 3) : 1996	Karnataka state, Sections (1 to 3)
(Part 5/ Sec 1) : 1997	Andhra Pradesh, Section 1 Availability of stones
(Part 5/ Sec 2) : 1997	Andhra Pradesh, Section 2 Engineering properties of building stones
(Part 5/ Sec 3) : 1997	Andhra Pradesh, Section 3 Engineering properties of stone aggregates
9394 : 1979	Specification for stone lintels
14223 (Part 1) : 1994	Specification for polished building stones: Part 1 Granite

23. STRUCTURAL SECTIONS

a) Structural Shapes

IS No.	Title
811 : 1987	Specification for cold formed light gauge structural steel sections (*revised*)
1173 : 1978	Specification for hot rolled and slit steel tee bars (*second revision*)
1863 : 1979	Specification for hot rolled steel bulb flats (*first revision*)
2314 : 1986	Specification for steel sheet piling sections (*first revision*)
3443 : 1980	Specification for crane rail sections (*first revision*)
3908 : 1986	Specification for aluminium equal leg angles (*first revision*)
3909 : 1986	Specification for aluminium unequal leg angles (*first revision*)

IS No.	Title
3921 : 1985	Specification for aluminium channels (*first revision*)
3964 : 1980	Specification for light rails (*first revision*)
5384 : 1985	Specification for aluminium I-beams (*first revision*)
6445 : 1985	Specification for aluminium tee sections (*first revision*)

b) Dimensional Standards

IS No.	Title
808 : 1989	Dimensions for hot rolled steel beam, column channel and angle sections (*third revision*)
1730 : 1989	Dimensions for steel plates, sheets strips and flats for general engineering purposes (*second revision*)
1732 : 1989	Dimensions for round and square steel bars for structural and general engineering purposes (*second revision*)
1852 : 1985	Rolling and cutting tolerances for hot rolled steel products (*fourth revision*)
2525 : 1982	Dimensions for wrought aluminium and aluminium alloy wire (*first revision*)
2591 : 1982	Dimensions for hot rolled steel bars for threaded components (*second revision*)
2673 : 2002	Dimensions for wrought aluminium and aluminium alloys, extruded round tube (*second revision*)
2676 : 1981	Dimensions for wrought aluminium and aluminium alloys, sheet and strip (*first revision*)
2677 : 1979	Dimensions for wrought aluminium and aluminium alloys, plates and hot rolled sheets (*first revision*)
2678 : 1987	Dimensions and tolerances for wrought aluminium and aluminium alloy, drawn round tubes (*second revision*)
3577 : 1992	Dimensions and tolerances for wrought aluminium and aluminium alloys rivet, bolt and screw stock (*first revision*)
3954 : 1991	Hot rolled steel channel sections for general engineering purposes— Dimensions (*first revision*)
3965 : 1981	Dimensions for wrought aluminium and aluminium alloys, bar, rod and section (*first revision*)
6477 : 1983	Dimensions for wrought aluminium and aluminium alloys, extruded hollow sections (*first revision*)
IS/ISO 7452 : 2002	Hot-rolled structural steel plates — Tolerances on dimensions and shape
12778 : 2004	Hot rolled parallel flange steel sections for beams, columns and bearing piles — Dimensions and section properties (*first revision*)
12779 : 1989	Rolling and cutting tolerances for hot rolled parallel flange beam and column sections
IS/ISO 16124 : 2004	Steel wire rod — Dimensions and tolerances
IS/ISO 16160 : 2012	Continuously hot rolled steel sheet products — Dimensional and shape tolerances (*first revision*)
IS/ISO 16162 : 2012	Continuously cold-rolled steel sheet products — Dimensional and shape tolerances (*first revision*)
IS/ISO 16163 : 2012	Continuously hot dipped coated steel products — Dimensional and shape tolerances (*first revision*)

24. THERMAL INSULATION MATERIALS

IS No.	Title
3144 : 1992	Methods of test for mineral wool thermal insulation material (*second revision*)
3346 : 1980	Methods for the determination of thermal conductivity of thermal insulation materials (two slab, guarded hot-plate method (*first revision*)
3677 : 1985	Specification for unbonded rock and slag wool for thermal insulation (*second revision*)
4671 : 1984	Specification for expanded polystyrene for thermal insulation purposes (*first revision*)
5688 : 1982	Methods of test for preformed block-type and pipe-covering type thermal insulation (*first revision*)
5724 : 1970	Methods of test for thermal insulating cement
6598 : 1972	Specification for cellular concrete for thermal insulation

IS No.	Title
7509 : 1993	Specification for thermal insulating cement (*first revision*)
8154 : 1993	Specification for preformed calcium silicate insulation for temperature up to 650°C (*first revision*)
8183 : 1993	Specification for bonded mineral wool (*first revision*)
9403 : 1980	Method of test for thermal conductance and transmittance of built up sections by means of guarded hot box
9489 : 1980	Method of test for thermal conductivity of materials by means of heat flow meter
9490 : 1980	Method of determination for thermal conductivity of insulation materials (water calorimeter method)
9742 : 1993	Specification for sprayed mineral wool thermal insulation (*first revision*)
9743 : 1990	Specification for thermal insulation finishing cements (*first revision*)
9842 : 1994	Specification for preformed fibrous pipe insulation (*first revision*)
11128 : 1994	Specification for spray applied hydrated calcium silicate thermal insulation
11129 : 1984	Method of test for tumbling friability of preformed block-type thermal insulation
11239	Method of test for rigid cellular thermal insulation materials
(Part 1) : 2009	Dimensions (*first revision*)
(Part 2) : 2009	Apparent density (*first revision*)
(Part 3) : 2009	Dimensional stability (*first revision*)
(Part 4) : 1985	Water vapour transmission rate (*first revision*)
(Part 5) : 2009	Volume percent of open and closed cells (*first revision*)
(Part 6) : 1985	Heat distortion temperature
(Part 7) : 1985	Coefficient of linear thermal expansion at low temperatures
(Part 8) : 1985	Flame height, time of burning and loss of mass
(Part 9) : 1988	Water absorption
(Part 10) : 1985	Flexural strength
(Part 11) : 1985	Compressive strength
(Part 12) : 1988	Horizontal burning characteristics
(Part 13) : 1992	Determination of flammability by oxygen index
11307 : 1985	Specification for cellular glass block and pipe thermal insulating
11308 : 1985	Specification for thermal insulating castables (hydraulic setting) for temperatures up to 1 250°C
12436 : 1988	Specification for preformed rigid polyurethane (PUR) and polyisocyanurate (PIR) foams for thermal insulation
13204 : 1991	Specification for rigid phenolic foams for thermal insulation
13286 : 1992	Methods of test for surface spread of flame for thermal insulation materials
14656 : 1999	Ceramic fibre products — Methods of test

25. THREADED FASTENERS, RIVETS AND NAILS

IS No.	Title
207 : 1964	Specification for gate and shutter hooks and eyes (*revised*)
451 : 1999	Specification for technical supply conditions for wood screws (*third revision*)
554 : 1999	Specification for pipe threads where pressure-tide joints are made on the threads — Dimensions, tolerances and designation (*fourth revision*)
723 : 1972	Specification for steel countersunk head wire nails (*second revision*)
724 : 1964	Specification for mild steel and brass cup, ruler and square hooks and screw eyes (*revised*)
725 : 1961	Specification for copper wire nails (*revised*)
730 : 1978	Specification for hook bolts for corrugated sheet roofing (*second revision*)
1120 : 1975	Specification for coach screws (*first revision*)
1363	Specification for hexagon head bolts, screws and nuts of product grade C
(Part 1) : 2002	Hexagon head bolts (Size range M5 to M64) (*fourth revision*)
(Part 2) : 2002	Hexagon head screws (Size range M5 to M64) (*fourth revision*)
(Part 3) : 2002	Hexagon nuts (Size range M5 to M64) (*fourth revision*)
1364	Specification for hexagon head bolts,

IS No.	Title
	screws and nuts of product Grades A and B
(Part 1) : 2002	Hexagon head bolts (Size range M1.6 to M64) (*fourth revision*)
(Part 2) : 2002	Hexagon head screws (Size range M1.6 to M64) (*fourth revision*)
(Part 3) : 2002	Hexagon nuts (Size range M1.6 to M64) (*fourth revision*)
(Part 4) : 2003	Hexagon thin nuts (chamfered) (Size range M1.6 to M64) (*fourth revision*)
(Part 5) : 2002	Hexagon thin nuts (unchamfered) (Size range M1.6 to M10) (*fourth revision*)
(Part 6) : 2002	Hexagon nuts, style 2
1365 : 2005	Slotted countersunk flat head screws (Common head style) — Product Grade A (*fourth revision*)
1366 : 2002	Specification for slotted cheese head screws (*third revision*)
1367	Specification for technical supply conditions for threaded steel fasteners
(Part 1) : 2014	Introduction and general information (*fourth revision*)
(Part 2) : 2002	Product grades and tolerances (*third revision*)
(Part 3) : 2002	Mechanical properties and test methods for bolts, screws and studs with full loadability (*fourth revision*)
(Part 5) : 2002	Mechanical properties and test methods for set screws and similar threaded fasteners not under tensile stresses (*third revision*)
(Part 6) : 1994	Mechanical properties and test methods for nuts with specified proof loads (*third revision*)
(Part 7) : 1980	Mechanical properties and test methods for nuts without specified proof loads (*second revision*)
(Part 8) : 2014	Mechanical and performance properties for prevailing torque type steel hexagon nuts (*fourth revision*)
(Part 9/Sec 1) : 1993	Surface discontinuities, Section 1 Bolts, screws and studs for general applications (*third revision*)
(Part 9/Sec 2) : 1993	Surface discontinuities, Section 2 Bolts, screws and studs for special applications (*third revision*)
(Part 10) : 2002	Surface discontinuities on nuts (*third revision*)
(Part 11) : 2002	Electroplated coatings (*third revision*)
(Part 12) : 1981	Phosphate coatings on threaded fasteners (*second revision*)
(Part 13) : 1983	Hot dip galvanized coatings on threaded fasteners (*second revision*)
(Part 14/Sec 1) : 2002	Mechanical properties of corrosion resistance stainless stainless steel fasteners, Section 1 Bolts, screws and studs (*third revision*)
(Part 14/Sec 2) : 2002	Mechanical properties of corrosion resistance stainless stainless steel fasteners, Section 2 Nuts (*third revision*)
(Part 14/Sec 3) : 2002	Mechanical properties of corrosion resistance stainless stainless steel fasteners, Section 3 Set screws and similar fasteners not under tensile stress (*third revision*)
(Part 16) : 2002	Designation system and symbols (*third revision*)
(Part 17) : 2005	Inspections, sampling and acceptance procedure (*fourth revision*)
(Part 18) : 1996	Packaging (*third revision*)
(Part 19) : 1996	Axial fatigue testing of bolts, screws and studs
(Part 20) : 1996	Torsional test and minimum torques for bolts and screws with nominal diameters 1mm to 10 mm
1929 : 1982	Specification for hot forged steel rivets for hot closing (12 to 36 mm diameter) (*first revision*)
2016 : 1967	Specification for plain washers (*first revision*)
2155 : 1982	Specification for cold forged solid steel rivets for hot closing (6 to 16 mm diameter) (*first revision*)
2269 : 2006	Hexagon socket head cap screws (*fifth revision*)
2585 : 2006	Specification for square head bolts, screws and square nuts of product grade C (*second revision*)
2609 : 1972	Specification for coach bolts (*first revision*)
2643 : 2005	Pipe threads where pressure-tight joints are not made on the threads — Dimensions, tolerances and designation (*third revision*)
2687 : 1991	Specification for cap nuts (*second revision*)

IS No.	Title
2769 : 1969	Sizes for squares and square holes for general engineering purposes (*first revision*)
2907 : 1998	Specification for non-ferrous rivets (*first revision*)
2998 : 1982	Specification for cold forged steel rivets for cold closing (1 to 16 mm diameter) (*first revision*)
3063 : 1994	Specification for fasteners single coil rectangular section spring lock washers (*second revision*)
3121 : 1981	Specification for rigging screws and stretching screws (*first revision*)
3468 : 1991	Specification for pipe nuts (*second revision*)
3640 : 1982	Specification for hexagon fit bolts (*first revision*)
3757 : 1985	Specification for high strength structural bolts (*second revision*)
4206 : 1987	Dimensions for nominal lengths, and thread lengths for bolts, screws and studs (*first revision*)
4762 : 2002	Specification for worm drive hose clips for general purposes (*second revision*)
5369 : 1975	General requirements for plain washers and lock washers (*first revision*)
5370 : 1969	Specification for plain washers with outside diameter 3 × inside diameter
5372 : 1975	Specification for taper washer for channels (ISMC) (*first revision*)
5373 : 1969	Specification for square washers for wood fastenings
5374 : 1975	Specification for taper washers for I-beam (ISMB) (*first revision*)
5624 : 1993	Specification for foundation bolts (*first revision*)
6113 : 1970	Specification for aluminium fasteners for building purposes
6610 : 1972	Specification for heavy washers for steel structures
6623 : 2004	Specification for high strength structural nuts (*second revision*)
6639 : 2005	Specification for hexagon head bolts for general steel structures (*first revision*)
6649 : 1985	Specification for hardened and tempered washers for high strength structural bolts and nuts (*first revision*)
6733 : 1972	Specification for wall and roofing nails
6736 : 1972	Specification for slotted raised countersunk head wood screws
6739 : 1972	Specification for slotted round head wood screws
6760 : 1972	Specification for slotted countersunk head wood screws
8033 : 1976	Specification for washers with square hole for wood fastenings
8412 : 1977	Specification for slotted countersunk head bolts for steel structures
8822 : 1978	Specification for slotted mushroom head roofing bolts
8869 : 1978	Specification for washers for corrugated sheet roofing
8911 : 2005	Countersunk slotted raised head screws (common head style) — Product Grade A (*first revision*)
10102 : 1982	Specification for technical supply conditions for rivets
10238 : 2001	Specification for step bolts for steel structures
12427 : 2001	Specification for threaded steel fasteners — hexagon head transmission tower bolts (*first revision*)

26. TIMBER, BAMBOO AND OTHER LIGNOCELLULOSIC BUILDING MATERIALS

a) Timber and Bamboo

i) *Timber Classification*

IS No.	Title
287 : 1993	Permissible moisture content for timber used for different purposes— Recommendations (*third revision*)
399 : 1963	Classification of commercial timbers and their zonal distribution (*revised*)
1150 : 2000	Trade names and abbreviated symbols for timber species (*third revision*)
4970 : 1973	Key for identification of commercial timber (*first revision*)

ii) *Timber Conversion and Grading*

IS No.	*Title*
190 : 1991	Specification for coniferous sawn timber (baulks and scantlings) (*fourth revision*)
1326 : 1992	Specification for non-coniferous sawn timber (baulks and scantlings) (*second revision*)
1331 : 1971	Specification for cut sizes of timber (*second revision*)
2377 : 1967	Tables for volumes of cut sizes of timber (*first revision*)
3337 : 1978	Specification for ballies for general purposes (*first revision*)
3386 : 1979	Specification for wooden fence posts (*first revision*)
5966 : 1993	Specification for non-coniferous timber in converted form for general purpose (*first revision*)
14960 : 2001	Specification for preservative treated and seasoned sawn timber from rubberwood (Hevea brasiliensis)

iii) *Timber Testing*

IS No.	*Title*
1708	Methods of testing small clear specimens of timber
(Part 1) : 1986	Determination of moisture content (*second revision*)
(Part 2) : 1986	Determination of specific gravity (*second revision*)
(Part 3) : 1986	Determination of volumetric shrinkage (*second revision*)
(Part 4) : 1986	Determination of radial and tangential shrinkage and fibre saturation point (*second revision*)
(Part 5) : 1986	Determination of static bending strength (*second revision*)
(Part 6) : 1986	Determination of static bending strength under two point loading (*second revision*)
(Part 7) : 1986	Determination of impact bending strength (*second revision*)
(Part 8) : 1986	Determination of compressive strength parallel to grain (*second revision*)
(Part 9) : 1986	Determination of compressive strength perpendicular to grain (*second revision*)
(Part 10) : 1986	Determination of hardness under static indentation (*second revision*)
(Part 11) : 1986	Determination of shear strength parallel to grain (*second revision*)
(Part 12) : 1986	Determination of tensile strength parallel to grain (*second revision*)
(Part 13) : 1986	Determination of tensile strength perpendicular to grain (*second revision*)
(Part 14) : 1986	Determination of cleavage strength parallel to grain (*second revision*)
(Part 15) : 1986	Determination of nail and screw holding power (*second revision*)
(Part 16) : 1986	Determination of brittleness by izod impact (*second revision*)
(Part 17) : 1986	Determination of brittleness by Charpy impact (*second revision*)
(Part 18) : 1986	Determination of torsional strength (*second revision*)
2408 : 1963	Methods of static tests of timbers in structural sizes
2455 : 1990	Method of sampling of model trees and logs for timber testing and their conversion (*second revision*)
2753	Methods for estimation of preservatives in treated timber and treating solutions
(Part 1) : 1991	Determination of copper, arsenic, chromium, zinc, boron, creosote and fuel oil (*first revision*)
(Part 2) : 2014	Determination of copper in copper organic preservative salt (*second revision*)
4907 : 2004	Method of testing timber connectors (*first revision*)
8292 : 1992	Methods for evaluation of working quality of timber under different wood operations — Method of test (*first revision*)
8720 : 1978	Methods of sampling of timber scantlings from depots and their conversion for testing
8745 : 1994	Methods of presentation of data of physical and mechanical properties of timber (*first revision*)
10420 : 1982	Method of determination of sound absorption coefficient of timber by standing wave method
10754 : 1983	Method of determination of thermal conductivity of timber
11215 : 1991	Methods for determination of moisture content of timber and timber products (*first revision*)

IS No.	Title
13621 : 1993	Method of test for determination of dielectric constant of wood under microwave frequencies

iv) *Structural Timber and Tests*

IS No.	Title
3629 : 1986	Specification for structural timber in building (*first revision*)
4891 : 1988	Specification for preferred cut sizes of structural timber (*first revision*)
4924	Method of test for nail jointed timber trusses
(Part 1) : 1968	Destructive test
(Part 2) : 1968	Proof test

v) *Logs*

IS No.	Title
3364	Method of measurement and evaluation of defects in timber
(Part 1) : 1976	Logs (*first revision*)
(Part 2) : 1976	Converted timber (*first revision*)
4895 : 1985	Specification for teak logs (*first revision*)
5246 : 2000	Specification for coniferous logs (*first revision*)
7308 : 1999	Specification for non-coniferous logs (*first revision*)

vi) *Bamboo*

IS No.	Title
6874 : 2008	Method of tests for bamboos (*first revision*)
8242 : 1976	Methods of tests for split bamboos

(b) Reconstituted Products

i) *Plywood*

IS No.	Title
303 : 1989	Specification for plywood for general purposes (*third revision*)
710 : 2010	Specification for marine plywood (*second revision*)
1328 : 1996	Specification for veneered decorative plywood (*third revision*)
1734	Methods of test for plywood
(Part 1) : 1983	Determination of density and moisture content (*second revision*)
(Part 2) : 1983	Determination of resistance of dry heat (*second revision*)
(Part 3) : 1983	Determination of fire resistance (*second revision*)
(Part 4) : 1983	Determination of glue shear strength (*second revision*)
(Part 5) : 1983	Test for adhesion of plies (*second revision*)
(Part 6) : 1983	Determination of water resistance (*second revision*)
(Part 7) : 1983	Mycological test (*second revision*)
(Part 8) : 1983	Determination of *p*H value (*second revision*)
(Part 9) : 1983	Determination of tensile strength (*second revision*)
(Part 10 : 1983	Determination of compressive strength (*second revision*)
(Part 11) : 1983	Determination of static bending strength (*second revision*)
(Part 12) : 1983	Determination of scarf joint strength (*second revision*)
(Part 13) : 1983	Determination of panel shear strength (*second revision*)
(Part 14) : 1983	Determination of plate shear strength (*second revision*)
(Part 15) : 1983	Central loading of plate test (*second revision*)
(Part 16) : 1983	Vibration of plywood plate test (*second revision*)
(Part 17) : 1983	Long time loading test of plywood strips (*second revision*)
(Part 18) : 1983	Impact resistance test on the surface of plywood (*second revision*)
(Part 19) : 1983	Determination of nail and screw holding power (*second revision*)
(Part 20) : 1983	Acidity and alkalinity resistance test (*second revision*)
4990 : 2011	Specification for plywood for concrete shuttering work (*third revision*)
5509 : 2000	Specification for fire retardant plywood (*second revision*)
5539 : 1969	Specification for preservative treated plywood
7316 : 1974	Specification for decorative plywood using plurality of veneers for decorative faces
10701 : 2012	Specification for structural plywood (*first revision*)
13957 : 1994	Specification for metal faced plywood
15791 : 2007	Specification for museum plywood

ii) *Blockboards, Particle Boards and Fibre Boards*

IS No.	Title
1658 : 2006	Specification for fibre hardboards (*third revision*)

IS No.	Title
1659 : 2004	Specification for block boards (*fourth revision*)
2380	Methods of test for wood particle boards and boards from other lignocellulosic materials
(Part 1) : 1977	Preparation and conditioning of test specimens (*first revision*)
(Part 2) : 1977	Accuracy of dimensions of boards (*first revision*)
(Part 3) : 1977	Determination of moisture content and density (*first revision*)
(Part 4) : 1977	Determination of static bending strength (*first revision*)
(Part 5) : 1977	Determination of tensile strength perpendicular to surface (*first revision*)
(Part 6) : 1977	Determination of tensile strength parallel to surface (*first revision*)
(Part 7) : 1977	Determination of compression-perpendicular to plane of the board (*first revision*)
(Part 8) : 1977	Compression parallel to surface test (*first revision*)
(Part 9) : 1977	Determination of resistance to shear in plane of the board (*first revision*)
(Part 10) : 1977	Falling hammer impact test (*first revision*)
(Part 11) : 1977	Surface hardness (*first revision*)
(Part 12) : 1977	Central loading of plate test (*first revision*)
(Part 13) : 1977	Long time loading bending test (*first revision*)
(Part 14) : 1977	Screw and nail withdrawal test (*first revision*)
(Part 15) : 1977	Lateral nail resistance (*first revision*)
(Part 16) : 1977	Determination of water absorption (*first revision*)
(Part 17) : 1977	Determination of swelling in water (*first revision*)
(Part 18) : 1977	Determination of mass and dimensional changes caused by moisture changes (*first revision*)
(Part 19) : 1977	Durability cyclic test for interior use (*first revision*)
(Part 20) : 1977	Accelerated weathering cyclic test for exterior use (*first revision*)
(Part 21) : 1977	Planeness test under uniform moisture content (*first revision*)
(Part 22) : 1981	Determination of surface glueability test
(Part 23) : 1981	Vibration test for particle boards
3087 : 2005	Specification for particle boards of wood and other lignocellulosic materials (medium density) for general purposes (*second revision*)
3097 : 2006	Specification for veneered particle boards (*second revision*)
3129 : 1985	Specification for low density particle boards (*first revision*)
3308 : 1981	Specification for wood wool building slabs (*first revision*)
3348 : 1965	Specification for fibre insulation boards
3478 : 1966	Specification for high density wood particle boards
12406 : 2003	Specification for medium density fibreboards for general purposes (*first revision*)
12823 : 2015	Specification for wood products — Prelaminated particle boards (*first revision*)
13745 : 1993	Method for determination of formaldehyde content in particle board by extraction method called perforator method
14276 : 1995	Specification for cement bonded particle boards
14587 : 1998	Specification for prelaminated medium density fibre board
15786 : 2008	Specification for prelaminated cement bonded particle boards

iii) *Wood-Based Laminates and Lumber*

IS No.	Title
3513 (Part 3) : 1989	Specification for resin treated compressed wood laminates (compregs): Part 3 For general purposes (*first revision*)
3513 (Part 4) : 1966	Specification for high and medium density wood laminates (compregs): Part 4 Sampling and tests
7638 : 1999	Methods of sampling for wood/ lignocellulosic based panel products (*second revision*)
9307	Methods of tests for wood-based structural sandwich construction
(Part 1) : 1979	Flexure test
(Part 2) : 1979	Edgewise compression test
(Part 3) : 1979	Flatwise compression test

IS No.	Title
(Part 4) : 1979	Shear test
(Part 5) : 1979	Flatwise tension test
(Part 6) : 1979	Flexure creep test
(Part 7) : 1979	Cantilever vibration test
(Part 8) : 1979	Weathering test
14315 : 1995	Specification for commercial veneers
14616 : 1999	Specification for laminated veneer lumber
16171 : 2014	Specification for veneer laminated lumber

iv) *Bamboo and Coir Board Products*

IS No.	Title
13958 : 1994	Specification for bamboo mat board for general purposes
14588 : 1999	Specification for bamboo mat veneer composite for general purposes
14842 : 2000	Specification for coir veneer board for general purposes
15476 : 2004	Specification for bamboo mat corrugated sheets
15491 : 2004	Specification for medium density coir boards for general purposes
15877 : 2010	Specification for coir faced block boards
15878 : 2010	Specification for coir hardboard for general purposes
15972 : 2012	Specification for bamboo-jute corrugated and semi-corrugated sheets

v) *Adhesives*

IS No.	Title
848 : 2006	Specification for synthetic resin adhesives for plywood (phenolic and aminoplastic) (*second revision*)
851 : 1978	Specification for synthetic resin adhesives for construction work (non-structural) in wood (*first revision*)
852 : 1994	Specification for animal glue for general wood-working purposes (*second revision*)
1508 : 1972	Specification for extenders for use in synthetic resin adhesives (urea-formaldehyde) for plywood (*first revision*)
4835 : 1979	Specification for polyvinyl acetate dispersion-based adhesives for wood (*first revision*)
9188 : 1979	Performance requirements for adhesive for structural laminated wood products for use under exterior exposure condition

27. UNIT WEIGHTS OF BUILDING MATERIALS

IS No.	Title
875 (Part 1) : 1987	Code of Practice for design loads (other than earthquake) for buildings and structures : Part 1 Dead loads — Unit weights of building material and stored materials (*second revision*)

28. WATERPROOFING AND DAMP-PROOFING MATERIALS

IS No.	Title
1322 : 1993	Specification for bitumen felts for waterproofing and damp-proofing (*fourth revision*)
1580 : 1991	Specification for bituminous compound for waterproofing and caulking purposes (*second revision*)
3037 : 1986	Specification for bitumen mastic for use in waterproofing of roofs (*first revision*)
3384 : 1986	Specification for bitumen primer for use in waterproofing and damp-proofing (*first revision*)
5871 : 1987	Specification for bitumen mastic for tanking and damp-proofing (*first revision*)
7193 : 2013	Specification for glass fibre base bitumen felts (*second revision*)
12027 : 1987	Specification for silicone-based water repellents
13435	Method of tests for acrylic based polymer waterproofing materials
(Part 1) : 1992	Determination of solid content
(Part 2) : 1992	Determination of coarse particle
(Part 3) : 1992	Determination of capillary water take-up
(Part 4) : 1992	Determination of *p*H value
13826	Method of test for bitumen based felts
(Part 1) : 1993	Breaking strength test
(Part 2) : 1993	Pliability test
(Part 3) : 1993	Storage sticking test
(Part 4) : 1993	Pressure head test
(Part 5) : 1993	Heat resistance test
(Part 6) : 1993	Water absorption test
(Part 7) : 1993	Determination of binder content
14695 : 1999	Specification for glass fibre base coal tar pitch outer wrap

29. WELDING ELECTRODES AND WIRES

IS No.	*Title*
814 : 2004	Specification for covered electrodes for manual metal arc welding of carbon and carbon manganese steel (*sixth revision*)
1278 : 1972	Specification for filler rods and wires for gas welding (*second revision*)
1395 : 1982	Specification for low and medium alloy steel covered electrodes for manual metal arc welding (*third revision*)
2879 : 1998	Mild steel for metal arc welding electrodes (*third revision*)
4972 : 1968	Specification for resistance spot-welding electrodes
5206 : 1983	Covered electrodes for manual arc welding of stainless steel and other similar high alloy steels (*first revision*)
5511 : 1991	Specification for covered electrodes for manual metal arc welding of cast iron (*first revision*)
5897 : 1985	Specification for aluminium and aluminium alloy welding rods and wires and magnesium alloy welding rods (*first revision*)
5898 : 1970	Specification for copper and copper alloy bare solid welding rods and electrodes
6419 : 1996	Specification for welding rods and bare electrodes for gas shielded arc welding of structural steel (*first revision*)
6560 : 1996	Specification for molybdenum and chromium-molybdenum low alloy steel welding rods and bare electrodes for gas shielded arc welding (*first revision*)
8363 : 1976	Specification for bare wire electrodes for electroslag welding of steels
10631 : 1983	Stainless steel for welding electrode core wire
15977 : 2013	Specification for classification and acceptance tests for bare solid wire electrodes and wire flux combination for submerged arc welding of structural steel
8666 : 1977	Specification for copper and copper alloy covered electrodes for manual metal arc welding

30. WIRE ROPES AND WIRE PRODUCTS (INCLUDING WIRE FOR FENCING)

IS No.	*Title*
278 : 2009	Specification for galvanized steel barbed wire for fencing (*fourth revision*)
2140 : 1978	Specification for stranded galvanized steel wire for fencing (*first revision*)
2266 : 2002	Specification for steel wire ropes for general engineering purposes (*fourth revision*)
2365 : 1977	Specification for steel wire suspension ropes for lifts, elevators and hoists (*first revision*)
2721 : 2003	Specification for galvanized steel chain link fences fabric (*second revision*)
6594 : 2001	Technical supply conditions for steel wire ropes and strands (*second revision*)
16013 : 2012	Specification for welded wire gabions (metallic-coated or metallic-coated with PVC coating)
16014 : 2012	Specification for mechanically woven, double-twisted, hexagonal wire mesh gabions, revet mattresses and rock fall netting (galvanized steel wire or galvanized steel wore with PVC coating)

NATIONAL BUILDING CODE OF INDIA

PART 6 STRUCTURAL DESIGN

Section 1 Loads, Forces and Effects

BUREAU OF INDIAN STANDARDS

CONTENTS

FOREWORD ... 3

1 SCOPE ... 7

2 DEAD LOAD ... 7

3 IMPOSED LOAD ... 7

4 WIND LOAD ... 18

5 SEISMIC FORCE ... 64

6 SNOW LOAD ... 92

7 SPECIAL LOADS ... 95

8 LOAD COMBINATIONS ...101

9 MULTI-HAZARD RISK IN VARIOUS DISTRICTS OF INDIA ...101

ANNEX A ILLUSTRATIVE EXAMPLE SHOWING REDUCTION OF UNIFORMLY DISTRIBUTED IMPOSED FLOOR LOADS IN MULTI-STOREYED BUILDINGS FOR DESIGN OF COLUMNS ...103

ANNEX B NOTATIONS ...104

ANNEX C BASIC WIND SPEED AT 10 m HEIGHT FOR SOME IMPORTANT CITIES/TOWNS ...105

ANNEX D CHANGES IN TERRAIN CATEGORIES ...106

ANNEX E EFFECT OF A CLIFF OR ESCARPMENT ON EQUIVALENT HEIGHT ABOVE GROUND (K_3 FACTOR) ...108

ANNEX F WIND FORCE ON CIRCULAR SECTIONS ...111

ANNEX G SYMBOLS ...112

ANNEX H MSK 1964 INTENSITY SCALE ...113

ANNEX J SIMPLIFIED PROCEDURE FOR EVALUATION OF LIQUEFACTION POTENTIAL ...115

ANNEX K LIST OF SOME IMPORTANT TOWNS AND THEIR SEISMIC ZONE FACTOR (Z) ...120

ANNEX L SHAPE COEFFICIENTS FOR MULTILEVEL ROOFS ...121

ANNEX M VIBRATIONS IN BUILDINGS ...122

ANNEX N BLAST LOAD ...123

ANNEX P SUMMARY OF DISTRICTS HAVING SUBSTANTIAL MULTI-HAZARD RISK AREAS ...130

LIST OF STANDARDS ...131

FOREWORD

This Code (Part 6/Section 1) covers the various loads, forces and effects which are to be taken into account for structural design of buildings. The various loads that are covered under this Section are dead load, imposed load, wind load, seismic force, snow load, special loads and load combinations.

This Code was first published in 1970 and subsequently revised in 1983 and 2005. The first revision of this Section was modified in 1987 through Amendment No. 2 to the 1983 version of the Code to bring this Section in line with the latest revised loading code. Thereafter, in view of the revision of the important Indian Standard on earthquake resistant design of structure, that is, IS 1893 a need to revise this part was felt again. The second revision of 2005 was therefore formulated to take into account the revised standard, IS 1893 (Part 1) : 2002 'Criteria for earthquake resistant design of structures: Part 1 General provision and buildings (*fifth revision*)' and to also incorporate latest information on additional loads, forces and effects as also the details regarding multi- hazard risk in various districts of India.

The significant changes incorporated in the second revision of 2005 included: the revision of the seismic zone map providing only four zones, instead of five, with erstwhile Zone I being merged into Zone II; changing of the values of seismic zone factors to reflect more realistic values of effective peak ground acceleration considering Maximum Considered Earthquake (MCE) and service life of structure in each seismic zone; specifying of response spectra for three types of founding strata, namely rock and hard soil, medium soil and soft soil; the revision of empirical expression for estimating the fundamental natural period T_a of multistoreyed buildings with regular moment resisting frames; adoption of the procedure of first calculating the actual force that may be experienced by the structure during the probable maximum earthquake, if it were to remain elastic, also bringing in the concept of response reduction due to ductile deformation or frictional energy dissipation in the cracks by introducing the 'response reduction factor' in place of the earlier performance factor; specifying a lower bound for the design base shear of buildings, based on empirical estimate of the fundamental natural period T_a; deletion of the soil-foundation system factor and instead, introduction of a clause to restrict the use of foundations vulnerable to differential settlements in severe seismic zones; revision of torsional eccentricity values upwards in view of serious damages observed in buildings with irregular plans; revision of modal combination rule in dynamic analysis of buildings; inclusion of a new clause on multi-hazard risk in various districts of India and a list of districts identified as multi-hazard prone districts; incorporation of latest amendments issued to IS 875; introduction of a clause on vibration in buildings for general guidance; and inclusion of reference to the Indian Standards on landslide control and design of retaining walls which were formulated after the first revision of the Section.

In this revision, following significant modifications/inclusions taking into account the recent developments, R & D efforts nationally and internationally, have been made:

1) Provisions on parapets and balustrades have been updated by including concentrated horizontal loads, wherever applicable, and modification in horizontal load per unit length. Also, new use areas covering appurtenances fixed to the structure have been included.
2) Aerodynamic roughness heights for individual terrain categories have been explicitly included, and are used to derive turbulence intensity and mean hourly wind speed profiles.
3) The previous classification of structures into B and C Classes has been deleted and accordingly the modification factor, k_2 is renamed as terrain roughness and height factor.
4) The values of k_2 factor corresponding to previous Class A type structure only, are retained in this Section.
5) An additional modification factor, k_4, termed as importance factor has been included for cyclonic regions.
6) Simple empirical expressions have been suggested for height variations of hourly mean wind speed and also turbulence intensity in different terrains.
7) Provisions to account for effects of directionality, area averaging and correlation of pressures on the design wind pressure have been included.
8) Guidelines to account for the wind induced interference for tall buildings and buildings less than 20 m

have been included for use in preliminary design. It is however recommended to carry out detailed boundary layer wind tunnel tests/computational fluid dynamics (CFD) studies for final design of important structures.

9) In the gust factor method for evaluating along wind response, equations have been suggested for background factor, size reduction factor, energy ratio and length scale of turbulence.
10) A method for computing across wind response of tall buildings and lattice towers has been included.
11) The basic wind speed map of India has been updated based on the R&D studies in the country.
12) Provisions relating to design imposed load due to helipad have been included.
13) Provisions related to design imposed load due to fire tenders and emergency vehicle have been included.
14) Provisions relating to loads due to collision between vehicle and structural and non-structural elements in car parking and stilts.
15) Design spectra are defined for natural period up to 6 s.
16) Same design response spectra are specified for all buildings, irrespective of the material of construction.
17) Bases of various load combinations to be considered have been made consistent for earthquake effects, with those specified in the other codes.
18) Temporary structures are brought under the purview of this Section.
19) Importance factor provisions have been modified to introduce intermediate importance category of buildings, to acknowledge the density of occupancy of buildings.
20) A provision is introduced to ensure that all buildings are designed for at least a minimum lateral force.
21) Buildings with flat slabs are brought under the purview of this Section.
22) Additional clarity is brought in on how to handle different types of irregularity of structural system.
23) Effect of masonry infill walls has been included in analysis and design of frame buildings.
24) Method is introduced for arriving at the approximate natural period of buildings with basements, step back buildings and buildings on hill slopes.
25) Torsional provisions are simplified.
26) Provisions relating to simplified method of evaluation of liquefaction potential have been included in Annex J.
27) Provisions relating to design for blast loads have been included in Annex N.

There has been a growing awareness among the consultants, academicians, researchers and practice engineers for design and construction of wind sensitive structures. In order to augment the available limited good quality meteorological wind data and structural response data, it is necessary to conduct full scale measurements in the field. Thus as emphasized in the previous revision, all individuals and organizations responsible for putting up of tall structures are encouraged to provide instrumentation in their existing and new structures (transmission towers, chimneys, cooling towers, buildings, etc) at different elevations (at least at two levels) to continuously measure and monitor wind data. The instruments are required to collect data on wind direction, wind speed and structural response of the structure due to wind (with the help of accelerometer, strain gauges, etc). Such instrumentation in tall structures shall not in any way affect or alter the functional behaviour of such structures. The data so collected shall be very valuable in evolving more accurate wind loading of structures.

The information contained in this Section is largely based on the following Indian Standards:

IS 875	Code of practice for design loads (other than earthquake) for building and structure:
(Part 2) : 1987	Imposed loads (*second revision*)
(Part 3) : 2015	Wind loads (*third revision*)
(Part 4) : 1987	Snow loads (*second revision*)
(Part 5) : 1987	Special loads and load combinations (*second revision*)
IS 1893 (Part 1) : 2016	Criteria for earthquake resistant design of structures: Part 1 General provisions and buildings (*sixth revision*)

This Section has to be read together with Sections 2 to 8 of Part 6 'Structural Design' of this Code.

A special publication, SP 64 (S&T) : 2001 'Explanatory Handbook on Indian Standard Code of Practice for Design Loads (Other than Earthquake) for Buildings and Structures IS 875 (Part 3) : 1987' is also available. This publication gives detailed background information on the provisions for wind loads and also the use of these provisions for arriving at the wind loads on buildings and structures while evaluating their structural safety.

However, in view of revision of IS 875 (Part 3) in 2015, applicability of this revised standard and this Section of the Code shall be taken as final in case of conflict of provisions with SP 64.

Reference may also be made to the Vulnerability Atlas of India, 2011 and Landslide Hazard Zonation Map of India, 2003 by Building Materials and Technology Promotion Council, Ministry of Urban Development and Poverty Alleviation, Government of India. The Vulnerability Atlas contains information pertaining to each State and Union Territory of India, on (a) seismic hazard map, (b) cyclone, and wind map, (c) flood prone area map, and (d) housing stock vulnerability table for each district indicating for each house type the level of risk to which it could be subjected. The Atlas can be used to identify areas in each district of the country which are prone to high risk from more than one hazard. The information will be useful in establishing the need of developing housing designs to resist the combination of such hazards.

In the formulation of this Section, inputs were also derived from the Heliport Manual, 1995 of the International Civil Aviation Organization.

For guidelines on risk reduction against tsunami for buildings and structures which are near-shore and on-shore within the expected run-up zone of the tsunami, reference may be made to the Indian Standard 'Guidelines for Risk Reduction of Structures against Tsunami' (*under preparation*). The standard deals also with the strategies for protection against tsunami and the design of structures located on coastal sites and in addition, includes special criteria for design of buildings that are to be used for vertical evacuation during a tsunami.

For criteria on structural safety of tall reinforced concrete (RC) buildings of heights greater than 45 m and less than 250 m, normally intended for use as residential, office and other commercial buildings, reference may be made to the Indian Standard 'Criteria for Structural Safety of Tall Buildings' (*under preparation*).

All standards, whether given herein above or cross-referred to in the main text of this Section, are subject to revision. The parties to agreement based on this Section are encouraged to investigate the possibility of applying the most recent editions of the standards.

For the purpose of deciding whether a particular requirement of this Section is complied with, the final value observed or calculated, expressing the result of a test or analysis, shall be rounded off in accordance with IS 2 : 1960 'Rules for rounding of numerical values (*revised*)'. The number of significant places retained in the rounded off value should be the same as that of the specified value in this Section.

NATIONAL BUILDING CODE OF INDIA

PART 6 STRUCTURAL DESIGN

Section 1 Loads, Forces and Effects

1 SCOPE

1.1 This Code (Part 6/Section 1) covers basic design loads to be assumed in the design of buildings. The imposed loads, wind loads, seismic forces, snow loads and other loads, which are specified herein, are minimum working loads which should be taken into consideration for purposes of design.

1.2 This Section does not take into consideration loads incidental to construction.

2 DEAD LOAD

2.1 Assessment of Dead Load

The dead load in a building shall comprise the weight of all walls, partitions, floors and roofs, and shall include the weights of all other permanent constructions (including built-in partitions, finishes, cladding and other similarly incorporated architectural and structural items, weight of fixed service equipment) in the building and shall conform to good practice [6-1(1)].

3 IMPOSED LOAD

3.1 This clause covers imposed loads to be assumed in the design of buildings. The imposed loads specified herein are minimum loads which should be taken into consideration for the purpose of structural safety of buildings.

NOTE — This Section does not cover detailed provisions for loads incidental to construction and special cases of vibration, such as moving machinery, heavy acceleration from cranes, hoists and the like. Such loads shall be dealt with individually in each case.

3.2 Terminology

3.2.1 For the purpose of imposed loads specified herein, the definitions given below shall apply.

3.2.1.1 *Assembly buildings* — These shall include any building or part of a building where groups of people congregate or gather for amusement, recreation, social, religious, patriotic, civil, travel and similar purposes; for example, theatres, motion picture houses, assembly halls, city halls, marriage halls, town halls, auditoria, exhibition halls, museums, skating rinks, gymnasiums, restaurants (also used as assembly halls), place of worship, dance halls, club rooms, passenger stations and terminals of air, surface and other public transportation services, recreation piers and stadia, etc.

3.2.1.2 *Business buildings* — These shall include any building or part of a building, which is used for transaction of business (other than that covered by mercantile buildings); for keeping of accounts and records for similar purposes; offices, banks, professional establishments, court houses, and libraries shall be classified in this group so far as principal function of these is transaction of public business and the keeping of books and records.

3.2.1.3 *Dwellings* — These shall include any building or part occupied by members of single/multi-family units with independent cooking facilities. These shall also include apartment houses (flats).

3.2.1.4 *Educational buildings* — These shall include any building used for school, college or day-care purposes involving assembly for instruction, education or recreation and which is not covered by assembly buildings.

3.2.1.5 *Imposed load* — The load assumed to be produced by the intended use or occupancy of a building including the weight of movable partitions, distributed and concentrated loads, loads due to impact and vibration, and dust loads but excluding wind, seismic, snow and other loads due to temperature changes, creep, shrinkage, differential settlement, etc.

3.2.1.6 *Industrial buildings* — These shall include any building or a part of a building or structure, in which products or materials of various kinds and properties are fabricated, assembled, manufactured or processed, for example, assembly plants, industrial laboratories, dry cleaning plants, power plants, generating units, pumping stations, fumigation chambers, laundries, buildings or structures in gas plants, refineries, dairies and saw-mills, etc.

3.2.1.7 *Institutional buildings* — These shall include any building or a part thereof, which is used for purposes such as medical or other treatment in case of persons suffering from physical and mental illness, disease or infirmity; care of infants, convalescents or aged persons and for penal or correctional detention in which the liberty of the inmates is restricted. Institutional buildings ordinarily provide sleeping accommodation for the occupants. It includes hospitals, sanatoria, custodial institutions or penal institutions like jails, prisons and reformatories.

3.2.1.8 *Occupancy or use group* — The principal occupancy for which a building or part of a building is used or intended to be used; for the purpose of classification of a building according to occupancy, an occupancy shall be deemed to include subsidiary

occupancies which are contingent upon it.

3.2.1.9 *Office buildings* — The buildings primarily to be used as an office or for office purposes; 'office purposes' include the purpose of administration, clerical work, handling money, telephone and telegraph operating, and operating computers, calculating machines, 'clerical work' includes writing, book-keeping, sorting papers, typing, filing, duplicating, drawing of matter for publication and the editorial preparation of matter for publication, etc.

3.2.1.10 *Mercantile buildings* — These shall include any building or a part of a building which is used as shops, stores, market for display and sale of merchandize either wholesale or retail. Office, storage and service and facilities incidental to the sale of merchandize and located in the same building shall be included under this group.

3.2.1.11 *Residential buildings* — These shall include any building in which sleeping accommodation is provided for normal residential purposes with or without cooking or dining or both facilities (except buildings under institutional buildings). It includes lodging or rooming houses, one or two-family private dwellings, dormitories, apartment houses (flats) and hotels.

3.2.1.12 *Storage buildings* — These shall include any building or part of a building used primarily for the storage or sheltering of goods, wares or merchandize, like warehouses, cold storages, freight depots, transit sheds, store houses, garages, hangers, truck terminals, grain elevators, barns and stables.

3.3 Imposed Loads on Floors Due to Use and Occupancy

3.3.1 *Imposed Loads*

The imposed loads to be assumed in the design of buildings shall be the greatest loads that probably will be produced by the intended use or occupancy, but shall not be less than the equivalent minimum loads specified in Table 1 subject to any reductions permitted in **3.3.2**.

Floors shall be investigated for both the uniformly distributed load (UDL) and the corresponding concentrated load specified in Table 1, and designed for the most adverse effects but they shall not be considered to act simultaneously. The concentrated loads specified in Table 1 may be assumed to act over an area of 0.3 m × 0.3 m. However, the concentrated loads need not be considered where the floors are capable of effective lateral distribution of this load.

All other structural elements shall be investigated for the effects of uniformly distributed loads on the floors specified in Table 1.

NOTES

1 Where, in Table 1, no values are given for concentrated load, it may be assumed that the tabulated distributed load is adequate for design purposes.

2 The loads specified in Table 1 are equivalent uniformly distributed loads on the plan area and provide for normal effects of impact and acceleration. They do not take into consideration special concentrated loads and other loads.

3 Where the use of an area or floor is not provided in Table 1, the imposed load due to the use and occupancy of such an area shall be determined from the analysis of loads resulting from,

a) weight of the probable assembly of persons;

b) weight of the probable accumulation of equipment and furnishing;

c) weight of the probable storage materials; and

d) impact factor, if any.

4 While selecting a particular loading, the possible change in use or occupancy of the building should be kept in view. Designers should not necessarily select in every case the lower loading appropriate to the first occupancy. In doing this they might introduce considerable restrictions in the use of the building at a later date, and thereby reduce its utility.

5 The loads specified herein, which are based on estimations, may be considered as the characteristic loads for the purpose of limit state method of design till such time statistical data are established based on load surveys to be conducted in the country.

6 When an existing building is altered by an extension in height or area, all existing structural parts affected by the addition shall be strengthened where necessary, and all new structural parts shall be designed to meet the requirements for building hereafter erected.

7 The loads specified in the Section does not include loads incidental to construction. Therefore, close supervision during construction is essential to ensure that overloading of the building due to loads by way of stacking of building materials or use of equipment (for example, cranes and trucks) during construction or loads which may be induced by floor to floor propping in multi-storeyed construction, does not occur. However, if construction loads were of short duration, permissible increase in stresses in the case of working stress method or permissible decrease in load factors in limit state method, as applicable to relevant design codes, may be allowed for.

8 The loads in Table 1 are grouped together as applicable to buildings having separate principal occupancy or use. For a building with multiple occupancies, the loads appropriate to the occupancy with comparable use shall be chosen from other occupancies.

9 Regarding loading on lift machine rooms including storage space used for repairing lift machines, designers should go by the recommendations of lift manufacturers for the present. Regarding loading due to false ceiling, the same should be considered as imposed loads on the roof/floor to which it is fixed.

3.3.1.1 *Load application*

The uniformly distributed loads specified in Table 1 shall be applied as static loads over the entire floor area under consideration or a portion of the floor area, whichever arrangement produces critical effects on the structural elements as provided in respective design codes.

In the design of floors, the concentrated loads are

Table 1 Imposed Floor Loads for Different Occupancies

(*Clause* 3.3.1)

Sl No.	Occupancy Classification	Uniformly Distributed Load (UDL) kN/m²	Concentrated Load kN
(1)	(2)	(3)	(4)
i)	Residential Buildings		
	a) Dwelling houses:		
	1) All rooms and kitchens	2.0	1.8
	2) Toilets and bath rooms	2.0	—
	3) Corridors, passages, staircases including fire escapes and store rooms	3.0	4.5
	4) Balconies	3.0	1.5 per metre run concentrated at the outer edge
	b) Dwelling units planned and executed in accordance with good practice [6-1(2)] only:		
	1) Habitable rooms, kitchens, and toilets and bath rooms	1.5	1.4
	2) Corridors, passages and staircases including fire escapes	1.5	1.4
	3) Balconies	3.0	1.5 per metre run concentrated at the outer edge
	c) Hotels, hostels, boarding houses, lodging houses, dormitories and residential clubs:		
	1) Living rooms, bed rooms and dormitories	2.0	1.8
	2) Kitchen and laundries	3.0	4.5
	3) Billiards room and public lounges	3.0	2.7
	4) Store rooms	5.0	4.5
	5) Dining rooms, cafeterias and restaurants	4.0	2.7
	6) Office rooms	2.5	2.7
	7) Rooms for indoor games	3.0	1.8
	8) Baths and toilets	2.0	—
	9) Corridors, passages staircases including fire escapes and lobbies – as per the floor serviced (excluding stores and the like) but not less than	3.0	4.5
	10) Balconies	Same as rooms to which they give access but with a minimum of 4.0	1.5 per metre run concentrated at the outer edge
	d) Boiler rooms and plant rooms– to be calculated but not less than	5.0	6.7
	e) Garages:		
	1) Garage floors (including parking area and repair workshops for passenger cars and vehicles not exceeding 2.5 tonne gross weight, including access ways and ramps – to be calculated but not less than	2.5	9.0
	2) Garage floors for vehicles not exceeding 4.0 tonne gross weight (including access ways and ramps) – to be calculated but not less than	5.0	9.0
ii)	Educational Buildings		
	a) Class rooms and lecture rooms (not used for assembly purposes)	3.0	2.7
	b) Dining rooms, cafeterias and restaurants	3.0[1)]	2.7
	c) Offices, lounges and staff rooms	2.5	2.7
	d) Dormitories	2.0	2.7
	e) Projection rooms	5.0	–
	f) Kitchens	3.0	4.5
	g) Toilets and bath rooms	2.0	–
	h) Store rooms	5.0	4.5
	j) Libraries and archives:		
	1) Stack room/stack area	6.0 kN/m² for a minimum height of 2.2 m + 2.0 kN/m² per metre height beyond 2.2 m	4.5

Table 1 — (*Continued*)

(1)	(2)	(3)	(4)
	2) Reading rooms (without separate storage)	4.0	4.5
	3) Reading rooms (with separate storage)	3.0	4.5
	k) Boiler rooms and plant rooms – to be calculated but not less than	4.0	4.5
	m) Corridors, passages, lobbies, staircases including fire escapes – as per the floor serviced (without accounting for storage and projection rooms) but not less than	4.0	4.5
	n) Balconies	Same as rooms to which they give access but with a minimum of 4.0	1.5 per metre run concentrated at the outer edge
iii)	Institutional Buildings		
	a) Bed rooms, wards, dressing rooms, dormitories and lounges	2.0	1.8
	b) Kitchens, laundries and laboratories	3.0	4.5
	c) Dining rooms, cafeterias and restaurants	3.0[1)]	2.7
	d) Toilets and bathrooms	2.0	–
	e) X-ray rooms, operating rooms and general storage areas – to be calculated but not less than	3.0	4.5
	f) Office rooms and O.P.D. rooms	2.5	2.7
	g) Corridors, passages, lobbies, staircases including fire escapes – as per the floor serviced (without accounting for storage and projection rooms) but not less than	4.0	4.5
	h) Boiler rooms and plant rooms – to be calculated but not less than	5.0	4.5
	j) Balconies	Same as rooms to which they give access but with a minimum of 4.0	1.5 per metre run concentrated at the outer edge
iv)	Assembly Buildings		
	a) Assembly areas :		
	1) With fixed seats[2)]	4.0	–
	2) Without fixed seats	5.0	3.6
	b) Restaurants (subject to assembly), museums and art galleries and gymnasia	4.0	4.5
	c) Projection rooms	5.0	—
	d) Stages	5.0	4.5
	e) Office rooms, kitchens and laundries	3.0	4.5
	f) Dressing rooms	2.0	1.8
	g) Lounges and billiards rooms	2.0	2.7
	h) Toilets and bathrooms	2.0	—
	j) Corridors, passages and staircases including fire escapes	4.0	4.5
	k) Balconies	Same as rooms to which they give access but with a minimum of 4.0	1.5 per metre run concentrated at the outer edge
	m) Boiler rooms and plant rooms including weight of machinery	7.5	4.5
	n) Corridors, passages, subject to loads greater than from crowds, such as wheeled vehicles, trolleys and the like corridors, staircases and passages in grandstands	5.0	4.5
v)	Business and Office Buildings (*see also* **3.2.1**)		
	a) Rooms for general use with separate storage	2.5	2.7
	b) Rooms without separate storage	4.0	4.5
	c) Banking halls	3.0	2.7
	d) Business computing machine rooms (with fixed computers or similar equipment)	3.5	4.5
	e) Records/files store rooms and storage space	5.0	4.5
	f) Vaults and strong rooms – to be calculated but not less than	5.0	4.5
	g) Cafeterias and dining rooms	3.0[1)]	2.7
	h) Kitchens	3.0	2.7
	j) Corridors, passages, lobbies, staircases including fire escapes – as per the floor serviced (excluding stores) but not less than	4.0	4.5
	k) Bath and toilets rooms	2.0	—

Table 1 — (*Concluded*)

(1)	(2)	(3)	(4)
	m) Balconies	Same as rooms to which they give access but with a minimum of 4.0	1.5 per metre run concentrated at the outer edge
	n) Stationary stores	4.0 for each metre of storage height	9.0
	p) Boiler rooms and plant rooms – to be calculated but not less than	5.0	6.7
	q) Libraries	*See* Sl No. (ii)	
vi)	Mercantile Buildings		
	a) Retail shops	4.0	3.6
	b) Wholesale shops – to be calculated but not less than	6.0	4.5
	c) Office rooms	2.5	2.7
	d) Dining rooms, restaurants and cafeterias	3.0[1)]	2.7
	e) Toilets	2.0	–
	f) Kitchens and laundries	3.0	4.5
	g) Boiler rooms and plant rooms – to be calculated but not less than	5.0	6.7
	h) Corridors, passages, staircases including fire escapes and lobbies	4.0	4.5
	j) Corridors, passages, staircases subject to loads greater than from crowds, such as wheeled vehicles, trolleys and the like	5.0	4.5
	k) Balconies	Same as rooms to which they give access but with a minimum of 4.0	1.5 per metre run concentrated at the outer edge
vii)	Industrial Buildings[3)]		
	a) Work areas without machinery/equipment	2.5	4.5
	b) Work areas with machinery/equipment[4)]		
	1) Light duty (To be calculated but not less than)	5.0	4.5
	2) Medium duty (To be calculated but not less than)	7.0	4.5
	3) Heavy duty (To be calculated but not less than)	10.0	4.5
	c) Boiler rooms and plant rooms – to be calculated but not less than	5.0	6.7
	d) Cafeterias and dining rooms	3.0[1)]	2.7
	e) Corridors, passages, stair cases including fire escapes	4.0	4.5
	f) Corridors, passages, lobbies, staircases subject to machine loads and wheeled vehicles – to be calculated but not less than	5.0	4.5
	g) Kitchens	3.0	4.5
	h) Toilets and bathrooms	2.0	—
viii)	Storage Buildings[4)]		
	a) Storage rooms (other than cold storage) and warehouses — to be calculated based on the bulk density of materials stored but not less than	2.4 kN/m^2 per metre of storage height with a minimum of 7.5 kN/m^2	7.0
	b) Cold storage – to be calculated but not less than	5.0 kN/m^2 per metre of storage height with a minimum of 15 kN/m^2	9.0
	c) Corridors, passages, staircases including fire escapes – as per the floor serviced but not less than	4.0	4.5
	d) Corridors, passages subject to loads greater than from crowds, such as wheeled vehicles, trolleys and the like	5.0	4.5
	e) Boiler rooms and plant rooms	7.5	4.5

[1)] Where unrestricted assembly of persons is anticipated, the value of UDL should be increased to 4.0 kN/m^2.

[2)] With fixed seats implies that the removal of the seating and the use of the space for other purposes is improbable. The maximu likely load in this case is, therefore, closely controlled.

[3)] The loading in industrial buildings (workshops and factories) varies considerably and so three loadings under the terms 'ligh 'medium' and 'heavy' are introduced in order to allow for more economical designs but the terms have no special meaning themselves other than the imposed load for which the relevant floor is designed. It is, however important particularly in the case heavy weight loads, to assess the actual loads to ensure that they arc not in excess of 10 kN/m^2; in case where they are in excess, tl design shall be based on the actual loadings.

[4)] For various mechanical handling equipment which are used to transport goods, as in warehouses, workshops, store rooms, etc, t actual load coming from the use of such equipment shall be ascertained and design should cater to such loads.

considered to be applied in the positions which produce the maximum stresses and where deflection is the main criterion in the positions which produce the maximum deflections. Concentrated load, when used for the calculation of bending and shear, are assumed to act at a point. When used for the calculation of local effects such as crushing or punching, they are assumed to act over an actual area of application of 0.3 m × 0.3 m.

3.3.1.2 *Loads due to light partitions*

In office and other buildings, where actual loads due to light partitions cannot be assessed at the time of planning the floors and the supporting structural members shall be designed to carry, in addition to other loads, uniformly distributed loads per square metre of not less than 33.33 percent of weight per metre run of finished partitions, subject to a minimum of 1 kN/m^2, provided total weight of partition walls per m^2 of the wall area does not exceed 1.5 kN/m^2 and the total weight per metre length is not greater than 4.0 kN.

3.3.2 *Reduction in Imposed Loads on Floors*

3.3.2.1 *For members supporting floors*

Except as provided for in **3.3.2.1**(a), the following reductions in assumed total imposed loads on the floors may be made in designing columns, load bearing walls, piers, their supports and foundations:

Number of Floors (Including the Roof) to be Carried by Member Under Consideration	*Reduction in Total Distributed Imposed Load on All Floors to be Carried by the Member Under Consideration* Percent
1	0
2	10
3	20
4	30
5 to 10	40
Over 10	50

a) No reduction shall be made for any plant or machinery which is specifically allowed for, or for buildings for storage purposes, warehouses and garages. However, for other buildings, where the floor is designed for an imposed floor load of 5.0 kN/m^2 or more, the reductions shown in **3.3.2.1** may be taken provided that the loading assumed is not less than it would have been, if all the floors had been designed for 5.0 kN/m^2 with no reductions.

NOTE — In case, if the reduced load in the lower floor is lesser than the reduced load in the upper floor, then the reduced load of the upper floor will be adopted.

b) An example is given in Annex A illustrating the reduction of imposed loads in a multi-storeyed building in the design of column members.

3.3.2.2 *For beams in each floor level*

Where a single span of beam, girder or truss supports not less than 50 m^2 of floor at one general level, the imposed floor load may be reduced in the design of the beams, girders or trusses by 5 percent for each 50 m^2 area supported subject to a maximum reduction of 25 percent. However, no reduction shall be made in any of the following types of loads:

a) Any superimposed moving load,
b) Any actual load due to machinery or similar concentrated loads,
c) The additional load in respect of partition walls; and
d) Any impact or vibration.

NOTE — The above reduction does not apply to beams, girders or trusses supporting roof loads.

3.3.3 *Posting of Floor Capacities*

Where a floor or part of a floor of a building has been designed to sustain a uniformly distributed load exceeding 3.0 kN/m^2 and in assembly, business, mercantile, industrial or storage buildings, a permanent notice in the form shown below indicating the actual uniformly distributed and/or concentrated loadings for which the floor has been structurally designed shall be posted in a conspicuous place in a position adjacent to such floor or on such part of a floor.

DESIGNED IMPOSED FLOOR LOADING

Distributed.....kN/m^2

Concentrated.....kN

Label Indicating Designed Imposed Floor Loading

NOTES

1 The lettering of such notice shall be embossed or cast suitably on a tablet whose least dimension shall not be less than 0.25 m and located not less than 1.5 m above floor level with lettering of a minimum size of 25 mm.

2 If a concentrated load or a bulk load has to occupy a definite position on the floor, the same could also be indicated in the table.

3.4 Imposed Loads on Roofs

3.4.1 *Imposed Loads on Various Types of Roofs*

On flat roofs, sloping roofs and curved roofs, the imposed loads due to use and occupancy of the buildings and the geometry of the types of roofs shall be as given in Table 2.

3.4.1.1 Roofs of buildings used for promenade or

Table 2 Imposed Loads on Various Types of Roofs

(*Clause* 3.4.1)

Sl No. (1)	Type of Roof (2)	Imposed Load Measured on Plan Area (3)	Minimum Imposed Load Measured on Plan (4)
i)	Flat, sloping or curved roof with slopes up to and including 10°:		
	a) Access provided	1.5 kN/m^2	3.75 kN uniformly distributed over any span of one metre width of the roof slab and 9 kN uniformly distributed over the span of any beam or truss or wall
	b) Access not provided except for maintenance	0.75 kN/m^2	1.9 kN uniformly distributed over any span of one metre width of the roof slab and 4.5 kN uniformly distributed over the span of any beam or truss or wall
ii)	Sloping roof with slope greater than 10°	For roof membrane sheets or purlins – 0.75 kN/m^2 less 0.02 kN/m^2 for every degree increase in slope over 10°	Subject to a minimum of 0.4 kN/m^2
iii)	Curved roof with slope of line obtained by joining springing point to the crown with the horizontal, greater than 10°	$(0.75 - 0.52\ \alpha^2)$ kN/m^2 where α = h/l h = height of the highest point of the structure measured from its springing; and l = chord width of the roof if singly curved and shorter of the two sides if doubly curved. Alternatively, where structural analysis can be carried out for curved roofs of all slopes in a simple manner applying the laws of statistics, the curved roofs shall be divided into minimum 6 equal segments and for each segment imposed load shall be calculated appropriate to the slope of the chord of each segment as given in Sl No. (i) and (ii).	Subject to a minimum of 0.4 kN/m^2

NOTES

1 The loads given above do not include loads due to snow, rain, dust collection, etc. The roof shall be designed for imposed loads given above or for snow/rain load, whichever is greater.

2 For special types of roofs with highly permeable and absorbent material, the contingency of roof material increasing in weight due to absorption of moisture shall be provided for.

incidental to assembly purposes shall be designed for the appropriate imposed floor loads given in Table 1 for the occupancy.

3.4.2 *Concentrated Load on Roof Coverings*

To provide for loads incidental to maintenance, unless otherwise specified by the Engineer-in-Charge, all roof coverings (other than glass or transparent sheets made of fibre glass) shall be capable of carrying an incidental load of 0.90 kN concentrated on an area of 1 250 mm^2 so placed as to produce maximum stresses in the covering. The intensity of the concentrated load may be reduced with the approval of the Engineer-in-Charge, where it is ensured that the roof coverings would not be traversed without suitable aids. In any case, the roof coverings shall be capable of carrying the loads in accordance with **3.4.1**, **3.4.3** and **3.4.4** and wind load.

3.4.3 *Loads Due to Rain*

On surfaces whose positioning, shape and drainage system are such as to make accumulation of rain water possible, loads due to such accumulation of water and the imposed loads for the roof as given in Table 2 shall be considered separately and the more critical of the two shall be adopted in the design.

3.4.4 *Dust Loads*

In areas prone to settlement of dust on roofs (for example, steel plants, cement plants), provision for dust load equivalent to probable thickness of accumulation of dust may be made.

3.4.5 *Loads on Members Supporting Roof Coverings*

Every member of the supporting structure which is directly supporting the roof covering(s) shall be designed to carry the more severe of the following loads except as provided in **3.4.5.1**:

a) The load transmitted to the members from the roof covering(s) in accordance with **3.4.1**, **3.4.3** and **3.4.4**; and

b) An incidental concentrated load of 0.90 kN concentrated over a length of 125 mm placed at the most critical positions on the member.

NOTE — Where it is ensured that the roofs would be traversed only with the aid of planks and ladders capable of distributing

the loads on them to two or more supporting members, the intensity of concentrated load indicated in **3.4.5** (b) may be reduced to 0.5 kN with the approval of the Engineer-in-Charge.

3.4.5.1 In case of sloping roofs with slope greater than 10°, members supporting the roof purlins, such as trusses, beams, girders, etc, may be designed for two-thirds of the imposed load on purlin or roofing sheets.

3.5 Imposed Horizontal Loads on Parapets, Balustrades and Other Appurtenances Fixed to Structure, and on Grandstands

3.5.1 *Parapets, Parapet Walls, Balustrades and other Appurtenances Fixed to the Structure such as Grab Bars, Fixed Ladders and Guardrails in Stilt Parking*

Parapets, parapet walls, balustrades and other appurtenances fixed to the structure such as grab bars, fixed ladders and guardrails in stilt parking, together with the members which give them structural support, shall be designed for the minimum loads given in Table 3. These are expressed as horizontal forces acting at handrail or coping level. These loads shall be considered to act vertically also but not simultaneously with the horizontal forces. The values given in Table 3 are minimum values and where values for actual loadings are available, they shall be used instead.

3.5.2 *Grandstands and the Like*

Grandstands, stadia, assembly platforms, reviewing stands and the like shall be designed to resist a horizontal force applied to seats of 0.35 kN per linear metre along the line of seats and 0.15 kN per linear metre perpendicular to the line of the seats. These loadings need not be applied simultaneously. Platforms without seats shall be designed to resist a minimum horizontal force of 0.25 kN/m^2 of plan area.

3.6 Loading Effects Due to Impact and Vibration

The crane loads to be considered under imposed loads shall include the vertical loads, eccentricity effects induced by vertical loads, impact factors, lateral and longitudinal braking forces acting across and along the crane rails, respectively.

3.6.1 *Impact Allowance for Lifts, Hoists and Machinery*

The imposed loads specified in **3.3.1** shall be assumed to include adequate allowance for ordinary impact conditions. However, for structures carrying loads which induce impact or vibration, as far as possible, calculations shall be made for increase in the imposed load due to impact or vibration. In the absence of sufficient data for such calculation, the increase in the imposed loads shall be as follows:

	Structures	*Impact Allowance* Percent *Min*
i)	For frames supporting lifts and hoists	100
ii)	For foundations, footings and piers supporting lifts and hoisting apparatus	40
iii)	For supporting structures and foundations for light machinery, shaft or motor units	20
iv)	For supporting structures and foundations for reciprocating machinery or power units	50

Table 3 Horizontal Loads on Parapets, Parapet Walls and Balustrades
(*Clause* 3.5.1)

Sl No.	Usage Area	Intensity of Horizontal Load kN/m Run	Concentrated load (For Each 3m length) kN
(1)	(2)	(3)	
i)	Light access stairs, gangways and like, not more than 600 mm wide	0.25	—
ii)	Light access stairs, gangways and like, more than 600 mm wide; stairways, landings, balconies and parapet walls (private and part of dwellings)	0.35	—
iii)	a) All other stairways, landings and balconies and all parapets and handrails to roofs [except those subject to overcrowding covered under Sl No. (iv)]	0.75	0.89
	b) Panel fillers	0.20	0.22
iv)	Parapets and balustrades:		
	a) In places of assembly, such as restaurants and bars, retail and public areas, not likely to be overcrowded	1.5	1.5
	b) In places of assembly, such as retail areas, theatres, cinemas, bars, auditoria, shopping malls, discothèques, places of worship, likely to be overcrowded	3.0	1.5
v)	Grab bars	—	1.11
vi)	Fixed ladders	—	1.33
vii)	Guardrail systems and handrail assemblies	0.73	0.89

NOTE — In the case of guard parapets on a floor of multi-storeyed car park or crash barriers provided in certain buildings for fire escape, the value of imposed horizontal load (together with impact load) may be determined. For (vii), this load need not be considered for (a) one- and two-family dwellings, and (b) factory, industrial and storage occupancies, in areas that serve occupant load not greater than 22 kN.

3.6.2 *Concentrated Imposed Loads with Impact and Vibration*

Concentrated imposed loads with impact and vibration which may be due to installed machinery shall be considered and provided for in the design. The impact factor shall not be less than 20 percent which is the amount allowable for light machinery.

3.6.2.1 Provision shall also be made for carrying any concentrated equipment loads while the equipment is being installed or moved for servicing and repairing.

3.6.3 *Impact Allowance for Crane Girders*

For crane gantry girders and supporting columns, the impact allowances (given below) shall be deemed to cover all forces set up by vibration, shock from slipping of slings, kinetic action of acceleration, and retardation and impact of wheel loads:

Forces specified in (c) and (d) shall be considered as acting at the rail level and being appropriately transmitted to the supporting system. Gantry girders and their vertical supports shall be designed on the assumption that either of the horizontal forces in (c) and (d) may act at the same time as the vertical load.

NOTE — *See* good practice [6-1(3)] for classification (Class I to Class IV) of cranes.

3.6.3.1 *Overloading factors in crane supporting structures*

For all ladle cranes and charging cranes where there is possibility of overloading from production considerations, an overloading factor of 10 percent of the maximum wheel loading shall be taken.

3.6.4 *Crane Load Combinations*

In the absence of any specific indications, the load combinations shall be as indicated below.

Type of Load	*Additional Load*
a) Vertical loads for electric overhead cranes	25 percent of maximum static loads for crane girders for all class of cranes 25 percent for columns supporting Class III and Class IV cranes 10 percent for columns supporting Class I and Class II cranes No additional load for design of foundations
b) Vertical loads for hand operated cranes	10 percent of maximum wheel loads for crane girders only
c) Horizontal forces transverse to rails:	
1) For electric overhead cranes with trolley having rigid mast for suspension of lifted weight (such as soaker crane, stripper crane, etc)	10 percent of weight of crab and the weight lifted by the cranes, acting on any one crane track rail, acting in either direction and equally distributed amongst all the wheels on one side of rail track For frame analysis, this force, calculated as above, shall be applied on one side of the frame at a time in either direction
2) For all other electric overhead cranes and hand operated cranes	5 percent of weight of crab and the weight lifted by the cranes, acting on any one crane track rail, acting in either direction and equally distributed amongst the wheels on one side of rail track For the frame analysis, the force, calculated as above, shall be applied on one side of the frame at a time in either direction
d) Horizontal traction forces along the rails for overhead cranes, either electrically operated or hand operated	5 percent of all static wheel loads

3.6.4.1 *Vertical loads*

In an aisle, where more than one crane is in operation or has provision for more than one crane in future, the following load combinations shall be taken for vertical loading:

a) Two adjacent cranes working in tandem with full load and with overloading according to **3.6.3.1**; and

b) For long span gantries, where more than one crane can come in the span, the girder shall be designed for one crane fully loaded with overloading according to **3.6.3.1** plus as many loaded cranes as can be accommodated on the span but without taking into account overloading according to **3.6.3** (a) to give the maximum effect.

3.6.4.2 *Lateral surge*

For design of columns and foundations, supporting crane girders, the following crane combinations shall be considered:

a) *For single bay frames* — Effect of one crane in the bay giving the worst effect shall be considered for calculation of surge force; and

b) *For multi-bay frames* — Effect of two cranes working, one each in any of two bays in the cross-section to give the worst effect shall be considered for calculation of surge force.

3.6.4.3 *Tractive force*

3.6.4.3.1 Where one crane is in operation with no provision for future crane, tractive force from only one crane shall be taken.

3.6.4.3.2 Where more than one crane is in operation or there is provision for future crane, tractive force from two cranes giving maximum effect shall be considered.

NOTE — Lateral surge force and longitudinal tractive force acting across and along the crane rail respectively shall not be assumed to act simultaneously. However, if there is only one crane in the bay, the lateral and longitudinal forces may act together simultaneously with vertical loads.

3.7 Rooftop Helipad

Elevated helipad structures shall be designed as per the latest guidelines of Directorate General of Civil Aviation and International Civil Aviation Organization's Heliport Manual.

3.7.1 *Structural Design*

Elevated helipads may be designed for a specific helicopter type though greater operational flexibility will be obtained from a classification system of design. The final approach and take-off area (FATO) should be designed for the largest or heaviest type of helicopter that is anticipated to use the helipad, and account taken of other types of loading such as personnel, freight, snow, refueling equipment, etc. For the purpose of design, it is to be assumed that the helicopter will land on two main wheels, irrespective of the actual number of wheels in the undercarriage, or on two skids, if they are fitted. The loads imposed on the structure should be taken as point loads at the wheel centres as shown below:

Helicopter Category	*Maximum Take-off Mass*		*Point Load for Each Wheel*	*Under-Carriage Wheel Centres*	*Super-imposed Load* S_{Ha}	*Super-imposed Load* S_{Hb}
	kg	kN	kN	m	kN/m^2	kN/m^2
(1)	(2)	(3)	(4)	(5)	(6)	(7)
1	Up to 2 300	Up to 22.6	12.0	1.75	0.5	1.5
2	2 301-5 000	22.6-49.2	25.0	2.0	0.5	2.0
3	5 001-9 000	49.2-88.5	45.0	2.5	0.5	2.5
4	9 001-13 500	88.5-133.0	67.0	3.0	0.5	3.0
5	13 501-19 500	133.0-192.0	96.0	3.5	0.5	3.0
6	19 501-27 000	192.0-266.0	133.0	4.5	0.5	3.0

3.7.2 The FATO should be designed for the worse condition derived from consideration of the following two cases.

3.7.3 *Case A — Helicopter on Landing*

When designing a FATO on an elevated helipad, and in order to cover the bending and shear stresses that result from a helicopter touching down, the following

should be taken into account:

a) *Dynamic load due to impact on touch-down* — This should cover the normal touchdown, with a rate of descent of 1.8 m/s, which equates to the serviceability limit state. The impact load is then equal to 1.55 times the maximum take-off mass of the helicopter.

The emergency touchdown should also be covered at a rate of descent of 3.6 m/s (12 ft/s), which equates to the ultimate limit state. The partial safety factor in this case should be taken as 1.66. Therefore,

Ultimate design load = 1.66 × service load
= (1.66 × 1.5) maximum take-off mass
= 2.5 maximum take-off mass

The sympathetic response factor discussed at **3.7.3** (b) below should be applied.

b) *Sympathetic response on the FATO* — The dynamic load should be increased by a structural response factor dependent upon the natural frequency of the platform slab when considering the design of supporting beams and columns. This increase in loading will usually apply only to slabs with one or more freely supported edges. It is recommended that the average structural response factor (R) of 1.3 should be used in determining the ultimate design load.

c) *Over-all superimposed load on the FATO* (S_{Ha}) — To allow for snow load, personnel, freight and equipment loads, etc, in addition to wheel loads, an allowance of 0.5 kN/m² should be included in the design.

d) *Lateral load on the platform supports* — The supports of the platform should be designed to resist a horizontal point load equivalent to 0.5 maximum take-off mass of the helicopter, together with the wind loading [*see* (*f*)], applied in the direction which will provide the greater bending moments.

e) *Dead load of structural members* — The partial safety factor to be used for the dead load should be taken as 1.4.

f) *Wind loading* — Shall be as per **4**.

g) *Punching shear* — Check for the punching shear of an undercarriage wheel or skid using the ultimate design load with a contact area of 64.5 × 10³ mm².

3.7.4 *Case B — Helicopter at Rest*

When designing a FATO on an elevated helipad, and in order to cover the bending and shear stresses from a helicopter at rest, the following should be taken into account:

a) *Dead load of the helicopter* — Each structural element shall be designed to carry the point load, in accordance with the table under **3.7.1**, from the two main wheels or skids applied simultaneously in any position on the FATO so as to produce the worst effect from both bending and shear.

b) *Over-all superimposed load* (S_{Hb}) — In addition to wheel loads, an allowance for over-all superimposed load given in the table under **3.7.1**, over the area of the FATO, should be included in the design.

c) *Dead load on structural members and wind loading* — The same factors should be included in the design for these items as given for Case A.

NOTE — The above design loads for helicopters at rest are summarized below:

Design Load for Helicopter on Landing — Case A

i)	Superimposed loads:	
	a) Helicopter	2.5 L_H distributed as two point loads at the wheel centres for the helicopter category given in the informal table under **3.7.1** Average value for R = 1.3.
	b) Lateral load	$1.6\frac{L_H}{2}$ applied horizontally in any direction
	c) Over-all superimposed load	Load at platform level together with the maximum wind loading. 1.4 S_{Ha} over the whole area of the platform (S_{Ha} given in the informal table under **3.7.1**)
ii)	Dead load	1.4G
iii)	Wind loading	1.4W
iv)	Punching shear check	2.5 $L_H R$ load over tyre skid contact area of 64.5 × 10³ mm²

Design Load for Helicopter at Rest — Case B

i)	Superimposed loads:	
	a) Helicopter	1.6 L_H distributed as two point loads at the wheel centres for the helicopter category given in the informal table under 3.7.1
	b) Over-all superimposed load (Personnel, freight, etc)	1.6 S_{H2} over the whole area of the platform. S_{H2} given in the informal table under 3.7.1
ii)	Shear check	Check as appropriate

Symbol	*Meaning*
L_H	Maximum take-off mass of helicopter
G	Dead load of structure
W	Wind loading
R	Structural response factor
S_{H2}	Superimposed load — Case A
S_{H3}	Superimposed load — Case B

Load Type	*Partial Load Factors*
Dynamic load (ultimate design load)	2.5
Live load	1.6
Dead load	1.4
Wind loading	1.4

3.7.5 Normally, the upper load limit of the helicopter category selected should be used for design purposes except as follows:

In order to avoid over-design in the platform the upper limit in any band may be exceeded by 10 percent should be the maximum take-off mass of a helicopter fall just into the next higher category.

3.8 Fire Tenders and Emergency Vehicles

Where a structure or portions of a structure are accessed and loaded by fire department access vehicles and other similar emergency vehicles, the structure shall be designed for the greater of the following loads:

a) The actual operational loads, including outrigger reactions and contact areas of the vehicles as stipulated and provided by the building official

b) The contact area of wheel dimensions to be used considering 45° distribution at the reinforcement of slab considering the bear coat on the slab and any soil filling.

or

In absence of any data the bare slab loading may be considered as 15 to 20 kN/m².

c) When the fire tender load is combined with gravity loads and the same can be considered as accidental load with the partial load factor of 1.05.

d) Fire tender load need not be combined with lateral loads.

4 WIND LOAD

4.1 General

4.1.1 This clause gives wind forces and their effects (static and dynamic) that should be taken into account when designing buildings, structures and components thereof.

4.1.2 Wind speeds vary randomly both in time and space and hence assessment of wind loads and response predictions are very important in the design of several buildings and structures. A large majority of structures met with in practice do not however, suffer wind induced oscillations and generally do not require to be examined for the dynamic effects of wind. For such normal, short and heavy structures, estimation of loads using static wind analysis has proved to be satisfactory. The details of this method involving important wind characteristics such as the basic wind speeds, terrain categories, modification factors, wind pressure and force coefficients, etc. are given in **4.4** and **4.5**.

4.1.3 Nevertheless, there are various types of structures or their components such as some tall buildings which require investigation of wind induced oscillations. The influence of dynamic velocity fluctuations on the along wind loads (drag loads) for these structures shall be determined using Gust Factor Method, included in **4.8**. A method for calculation of across wind response of tall buildings is included in **4.8.3**.

4.1.4 This Section also applies to buildings or other structures during erection/construction and the same shall be considered carefully during various stages of erection/construction. In locations where the strongest winds and icing may occur simultaneously, loads on structural members, cables and ropes shall be calculated by assuming an ice covering based on climatic and local experience.

4.1.5 Wind is air in motion relative to the surface of the earth. The primary cause of wind is traced to earth's rotation and differences in terrestrial radiation. The radiation effects are primarily responsible for convection either upwards or downwards. The wind generally blows horizontal to the ground at high wind speeds. Since vertical components of atmospheric motion are relatively small, the term 'wind' denotes almost exclusively the horizontal wind; vertical winds are always identified as such. The wind speeds are assessed with the aid of anemometers or anemographs which are installed at meteorological observatories at heights generally varying from 10 to 30 m above ground.

4.1.6 Very strong winds (more than 80 km/h) are generally associated with cyclonic storms, thunderstorms, dust storms or vigorous monsoons. A feature of the cyclonic storms over the Indian area is that they rapidly weaken after crossing the coasts and move as depressions/lows inland. The influence of a severe storm after striking the coast does not; in general exceed about 60 km, though sometimes, it may extend even up to 120 km. Very short duration hurricanes of very high wind speeds called *Kal Baisaki* or Norwesters occur fairly frequently during summer months over North East India.

4.1.7 The wind speeds recorded at any locality are extremely variable and in addition to steady wind at any time, there are effects of gusts which may last for a few seconds. These gusts cause increase in air pressure but their effect on stability of the building may not be so important; often, gusts affect only part of the building and the increased local pressures may be more than balanced by a momentary reduction in the pressure elsewhere. Because of the inertia of the building, short period gusts may not cause any appreciable increase in stress in main components of the building although the walls, roof sheeting and individual cladding units (glass panels) and their support-ing members such as purlins, sheeting rails and glazing bars may be more seriously affected. Gusts can also be extremely important for design of structures with high slenderness ratios.

4.1.8 The liability of a building to high wind pressures depends not only upon the geographical location and proximity of other obstructions to air flow but also upon the characteristics of the structure itself.

4.1.9 The effect of wind on the structure as a whole is determined by the combined action of external and internal pressures acting upon it. In all cases, the calculated wind loads act normal to the surface to which they apply.

4.1.10 The stability calculations as a whole shall be done considering the combined effect, as well as separate effects of imposed loads and wind loads on vertical surfaces, roofs and other part of the building above general roof level.

4.1.11 Buildings shall also be designed with due attention to the effects of wind on the comfort of people inside and outside the buildings.

NOTES

1 This Section does not apply to buildings or structures with unconventional shapes, unusual locations, and abnormal environmental conditions that have not been covered in this Code. Special investigations are necessary in such cases to establish wind loads and their effects. Wind tunnel studies may also be required in such situations.

2 In the case of tall structures with unsymmetrical geometry, the designs may have to be checked for torsional effects due to wind pressure.

3 The provisions given in good practice [6-1(4)] may be suitably referred by the design engineer/planner for reference.

4.2 Notations

The notations to be followed unless otherwise specified in relevant clauses under wind loads are given in Annex B.

4.3 Terminology

4.3.1 For the purpose of wind loads, the definitions given below shall apply.

4.3.1.1 *Angle of attack* — An angle between the direction of wind and a reference axis of the structure.

4.3.1.2 *Breadth* — It means horizontal dimension of the building measured normal to the direction of wind.

4.3.1.3 *Depth* — It means the horizontal dimension of the building measured in the direction of the wind.

NOTE — Breadth and depth are dimensions measured in relation to the direction of wind, whereas length and width are dimensions related to the plan.

4.3.1.4 *Developed height* — It is the height of upward penetration of the velocity profile in a new

terrain. At large fetch lengths, such penetration reaches the gradient height, above which the wind speed may be taken to be constant. At lesser fetch lengths, a velocity profile of a smaller height but similar to that of the fully developed profile of that terrain category has to be taken, with the additional provision that the velocity at the top of this shorter profile equal to that of the un-penetrated earlier velocity profile at that height.

4.3.1.5 *Effective frontal area* — The projected area of the structure normal to the direction of wind.

4.3.1.6 *Element of surface area* — The area of surface over which the pressure coefficient is taken to be constant.

4.3.1.7 *Force coefficient* — A non-dimensional coefficient such that the total wind force on a body is the product of the force coefficient, the dynamic pressure of the incident design wind speed and the reference area over which the force is required.

NOTE — When the force is in the direction of the incident wind, the non-dimensional coefficient will be called as 'drag coefficient'. When the force is perpendicular to the direction of incident wind, the non-dimensional coefficient will be called as 'lift coefficient'.

4.3.1.8 *Ground roughness* — The nature of the earth's surface as influenced by small scale obstructions such as trees and buildings (as distinct from topography) is called ground roughness.

4.3.1.9 *Gust* — A positive or negative departure of wind speed from its mean value, lasting for not more than, say, 2 min over a specified interval of time.

4.3.1.10 *Peak gust* — A peak gust or peak gust speed is the wind speed associated with the maximum amplitude.

4.3.1.11 *Fetch length* — It is the distance measured along the wind from a boundary at which a change in the type of terrain occurs. When the changes in terrain types are encountered (such as, the boundary of a town or city, forest, etc), the wind profile changes in character but such changes are gradual and start at ground level, spreading or penetrating upwards with increasing fetch length.

4.3.1.12 *Gradient height* — It is the height above the mean ground level at which the gradient wind blows as a result of balance among pressure gradient force, Coriolis force and centrifugal force. For the purpose of this Section, the gradient height is taken as the height above the mean ground level, above which the variation of wind speed with height need not be considered.

4.3.1.13 *Tall building* — A building with a height more than or equal to 50 m or having a height to smaller lateral dimension more than 6.

4.3.1.14 *Mean ground level* — The mean ground level is the average horizontal plane of the area enclosed by the boundaries of the structure.

4.3.1.15 *Pressure coefficient* — It is the ratio of the difference between the pressure acting at a point on the surface and the static pressure of the incident wind to the design wind pressure, where the static and design wind pressures are determined at the height of the point considered after taking into account the geographical location, terrain conditions and shielding effect. The pressure coefficient is also equal to $[1-(V_p/V_z)^2]$, where V_p is the actual wind speed at any point on the structure at a height corresponding to that of V_z.

NOTE — Positive sign of the pressure coefficient indicates pressure acting towards the surface and negative sign indicates pressure acting away from the surface.

4.3.1.16 *Return period* — It is the number of years, reciprocal of which gives the probability of extreme wind exceeding a given wind speed in anyone year.

4.3.1.17 *Shielding effect* — Shielding effect or shielding refers to the condition where wind has to pass along some structure(s) or structural element(s) located on the upstream wind side, before meeting the structure or structural element under consideration. A factor called 'shielding factor' is used to account for such effects in estimating the force on the shielded structures.

4.3.1.18 *Suction* — It means pressure less than the atmospheric (static) pressure and is taken to act away from the surface.

4.3.1.19 *Solidity ratio* — It is equal to the effective area (projected area of all the individual elements) of a frame normal to the wind direction divided by the area enclosed by the boundary of the frame normal to the wind direction.

NOTE — Solidity ratio is to be calculated for individual frames.

4.3.1.20 *Terrain category* — It means the characteristics of the surface irregularities of an area which arise from natural or constructed features. The categories are numbered in increasing order of roughness.

4.3.1.21 *Topography* — The nature of the earth's surface as influenced by the hill and valley configurations.

4.3.1.22 *Velocity profile* — The variation of the horizontal component of the atmospheric wind speed at different heights above the mean ground level is termed as velocity profile.

4.4 Wind Speed

4.4.1 *Nature of Wind in Atmosphere*

In general, wind speed in the atmospheric boundary layer increases with height from zero at ground level to maximum at a height called the gradient height. There is usually a slight change in direction (Ekman effect) but this is ignored in this Section. The variation with height depends primarily on the terrain conditions. However, the wind speed at any height never remains constant and it has been found convenient to resolve its instantaneous magnitude into an average or mean value and a fluctuating component around this average value. The average value depends on the average time employed in analyzing the meteorological data and this averaging time varies from few seconds to several minutes. The magnitude of fluctuating component of the wind speed, which is called gust, depends on the averaging time. In general, smaller the averaging interval more is the magnitude of the gust speed.

4.4.2 *Basic Wind Speed*

Figure 1 gives basic wind speed map of India, as applicable to 10 m height above mean ground level for different zones of the country. Basic wind speed is based on peak gust velocity averaged over a short time interval of about 3 s and corresponds to mean heights above ground level in an open terrain (Category 2). Basic wind speeds presented in Fig. 1 have been worked out for a 50 year return period. Basic wind speed for some important cities/towns is also given in Annex C.

4.4.3 *Design Wind Speed* (V_z)

The basic wind speed (V_b) for any site shall be obtained from Fig. 1 and shall be modified to include the following effects to get design wind speed, V_z at any height z, for the chosen structure:

a) Risk level,
b) Terrain roughness and height of structure,
c) Local topography, and
d) Importance factor for the cyclonic region.

It can be mathematically expressed as follows:

$$V_z = V_b\, k_1\, k_2\, k_3\, k_4$$

where

V_z = design wind speed at height z, in m/s;

k_1 = probability factor (risk coefficient) (*see* **4.4.3.1**);

k_2 = terrain roughness and height factor (*see* **4.4.3.2**);

k_3 = topography factor (*see* **4.4.3.3**); and

k_4 = importance factor for the cyclonic region (*see* **4.4.3.4**).

NOTE — Wind speed may be taken as constant up to a height of 10 m. However, pressures for buildings less than 10 m high may be reduced by 20 percent for evaluating stability and design of the framing.

4.4.3.1 *Risk coefficient* (k_1 *factor*)

Figure 1 gives basic wind speeds for Terrain Category 2 as applicable at 10 m above ground level based on 50 years mean return period. The suggested life period to be assumed in design and the corresponding k_1 factors for different class of structures for the purpose of design are given in Table 4. In the design of buildings and structures, a regional basic wind speed having a mean return period of 50 years shall be used except as specified in Note of Table 4.

4.4.3.2 *Terrain, height factor* (k_2 *factor*)

4.4.3.2.1 *Terrain*

Selection of terrain categories shall be made with due regard to the effect of obstructions which constitute the ground surface roughness. The terrain category used in the design of a structure may vary depending on the direction of wind under consideration. Wherever sufficient meteorological information is available about the nature of wind direction, the orientation of any building or structure may be suitably planned.

Terrain in which a specific structure stands shall be assessed as being one of the following terrain categories:

a) *Category 1* — Exposed open terrain with few or no obstructions and in which the average height of any object surrounding the structure is less than 1.5 m. The equivalent aerodynamic roughness height, ($z_{0,1}$) for this terrain is 0.002 m. Typically this category represents open sea-coasts and flat plains without trees.

b) *Category 2* — Open terrain with well scattered obstructions having heights generally between 1.5 m and 10 m. The equivalent aerodynamic roughness height, ($z_{0,2}$) for this terrain is 0.02 m. This is the criterion for measurement of regional basic wind speeds and represents airfields, open park lands and undeveloped spar-sely built-up outskirts of towns and suburbs. Open land adjacent to sea coast may also be classified as Category 2 due to roughness of large sea waves at high winds.

c) *Category 3* — Terrain with numerous closely spaced obstructions having the size of buildings/structures up to 10 m in height with or without a few isolated tall structures. The equivalent aerodynamic roughness height, ($z_{0,3}$) for this terrain is 0.2 m. This category represents well wooded areas, and shrubs, towns and industrial areas full or partially

Table 4 Risk Coefficients for Different Classes of Structures in Different Wind Speed Zones

(*Clause* 4.4.3.1)

Sl No.	Class of Structure	Mean Probable Design Life of Structure in Years	K_1 Factor for Basic Wind Speed (in m/s) of					
			33	39	44	47	50	55
(1)	(2)	(3)	(4)	(5)	(6)	(7)	(8)	(9)
i)	All general buildings and structures	50	1.0	1.0	1.0	1.0	1.0	1.0
ii)	Temporary sheds, structures such as those used during construction operations (for example form-work and false work), structures during construction stages and boundary walls	5	0.82	0.76	0.73	0.71	0.70	0.67
iii)	Buildings and structures presenting a low degree of hazard to life and property in the event of failure, such as isolated towers in wooded areas, farm buildings other than residential buildings	25	0.94	0.92	0.91	0.90	0.90	0.89
iv)	Important buildings and structures, such as hospitals, communication buildings/towers, and power plant structures	100	1.05	1.06	1.07	1.07	1.08	1.08

NOTE — The factor k_1 is based on statistical concepts which take into account the degree of reliability required and period of time in years during which there will be exposure to wind, that is, life of the structure. Whatever wind speed is adopted for design purposes, there is always a probability (however small) that it may be exceeded in a storm of exceptional violence; more the period of years over which there is exposure to the wind, more is the probability. Larger return periods ranging from 100 to 1 000 years (implying lower risk level) in association with larger periods of exposure may have to be selected for exceptionally important structures, such as, nuclear power reactors and satellite communication towers. Equation given below may be used in such cases to estimate k_1 factors for different periods of exposure and chosen probability of exceedance (risk level). The probability level of 0.63 is normally considered sufficient for design of buildings and structures against wind effects and the values of k_1 corresponding to this risk level are given above.

$$k_1 = \frac{X_{N,P}}{X_{50,0.63}} = \frac{A - B\left[l_n\left\{-\frac{1}{N} l_n\left(1 - P_N\right)\right\}\right]}{A + 4B}$$

where

N = mean probable design life of structure in years;

P_N = risk level in N consecutive years (probability that the design wind speed is exceeded at least once in N successive years), nominal value = 0.63;

$X_{N,P}$ = extreme wind speed for given values of N and P_N; and

$X_{50,0.63}$ = extreme wind speed for N = 50 years and P_N = 0.63

A and B have the following values for different basic wind speed zones:

Zone m/s	A* m/s	B* m/s
33	23.1 (83.2)	2.6 (9.2)
39	23.3 (84.0)	3.9 (14.0)
44	24.4 (88.0)	5.0 (18.0)
47	24.4 (88.0)	5.7 (20.5)
50	24.7 (88.8)	6.3 (22.8)
55	25.2 (90.8)	7.6 (27.3)

* Values of A and B, in km/h are given within bracket

developed. It is likely that the, next higher category than this will not exist in most design situations and that selection of a more severe category will be deliberate.

d) *Category 4* — Terrain with numerous large high closely spaced obstructions. The equivalent aerodynamic roughness height, ($z_{0,4}$) for this terrain is 2.0 m. This category represents large city centers, generally with obstructions above 25 m and well developed industrial complexes.

4.4.3.2.2 *Variation of wind speed with height in different terrains (k_2)*

Table 5 gives multiplying factors (k_2) by which the basic wind speed given in Fig. 1 shall be multiplied to obtain the wind speed at different heights, in each terrain category.

4.4.3.2.3 *Terrain categories in relation to the direction of wind*

The terrain category used in the design of a structure

ients for Different Classes of Structures in Different Wind Speed Zones

(*Clause* 4.4.3.1)

Structure	Mean Probable Design Life of Structure in Years	K_1 Factor for Basic Wind Speed (in m/s) of					
		33	39	44	47	50	55
(2)	(3)	(4)	(5)	(6)	(7)	(8)	(9)
l structures	50	1.0	1.0	1.0	1.0	1.0	1.0
ctures such as those used erations (for example form- ructures during construction lls	5	0.82	0.76	0.73	0.71	0.70	0.67
s presenting a low degree of perty in the event of failure, ers in wooded areas, farm idential buildings	25	0.94	0.92	0.91	0.90	0.90	0.89
l structures, such as hospitals, ngs/towers, and power plant	100	1.05	1.06	1.07	1.07	1.08	1.08

k_1 is based on statistical concepts which take into account the degree of reliability required and period of which there will be exposure to wind, that is, life of the structure. Whatever wind speed is adopted for is always a probability (however small) that it may be exceeded in a storm of exceptional violence; more er which there is exposure to the wind, more is the probability. Larger return periods ranging from 100 to lower risk level) in association with larger periods of exposure may have to be selected for exceptionally such as, nuclear power reactors and satellite communication towers. Equation given below may be used in e k_1 factors for different periods of exposure and chosen probability of exceedance (risk level). The .63 is normally considered sufficient for design of buildings and structures against wind effects and the ding to this risk level are given above.

$$k_1 = \frac{X_{N,P}}{X_{50,0.63}} = \frac{A - B\left[l_n\left\{-\frac{1}{N} l_n\left(1 - P_N\right)\right\}\right]}{A + 4B}$$

bable design life of structure in years;

in N consecutive years (probability that the design wind speed is exceeded at least once in N successive ominal value = 0.63;

wind speed for given values of N and P_N; and

wind speed for N = 50 years and P_N = 0.63

owing values for different basic wind speed zones:

Zone m/s	A^* m/s	B^* m/s
33	23.1 (83.2)	2.6 (9.2)
39	23.3 (84.0)	3.9 (14.0)
44	24.4 (88.0)	5.0 (18.0)
47	24.4 (88.0)	5.7 (20.5)
50	24.7 (88.8)	6.3 (22.8)
55	25.2 (90.8)	7.6 (27.3)

ues of A and B, in km/h are given within bracket

likely that the, next higher will not exist in most design selection of a more severe eliberate.

rrain with numerous large aced obstructions. The namic roughness height, n is 2.0 m. This category y centers, generally with 25 m and well developed s.

4.4.3.2.2 *Variation of wind speed with height in different terrains (k_2)*

Table 5 gives multiplying factors (k_2) by which the basic wind speed given in Fig. 1 shall be multiplied to obtain the wind speed at different heights, in each terrain category.

4.4.3.2.3 *Terrain categories in relation to the direction of wind*

The terrain category used in the design of a structure

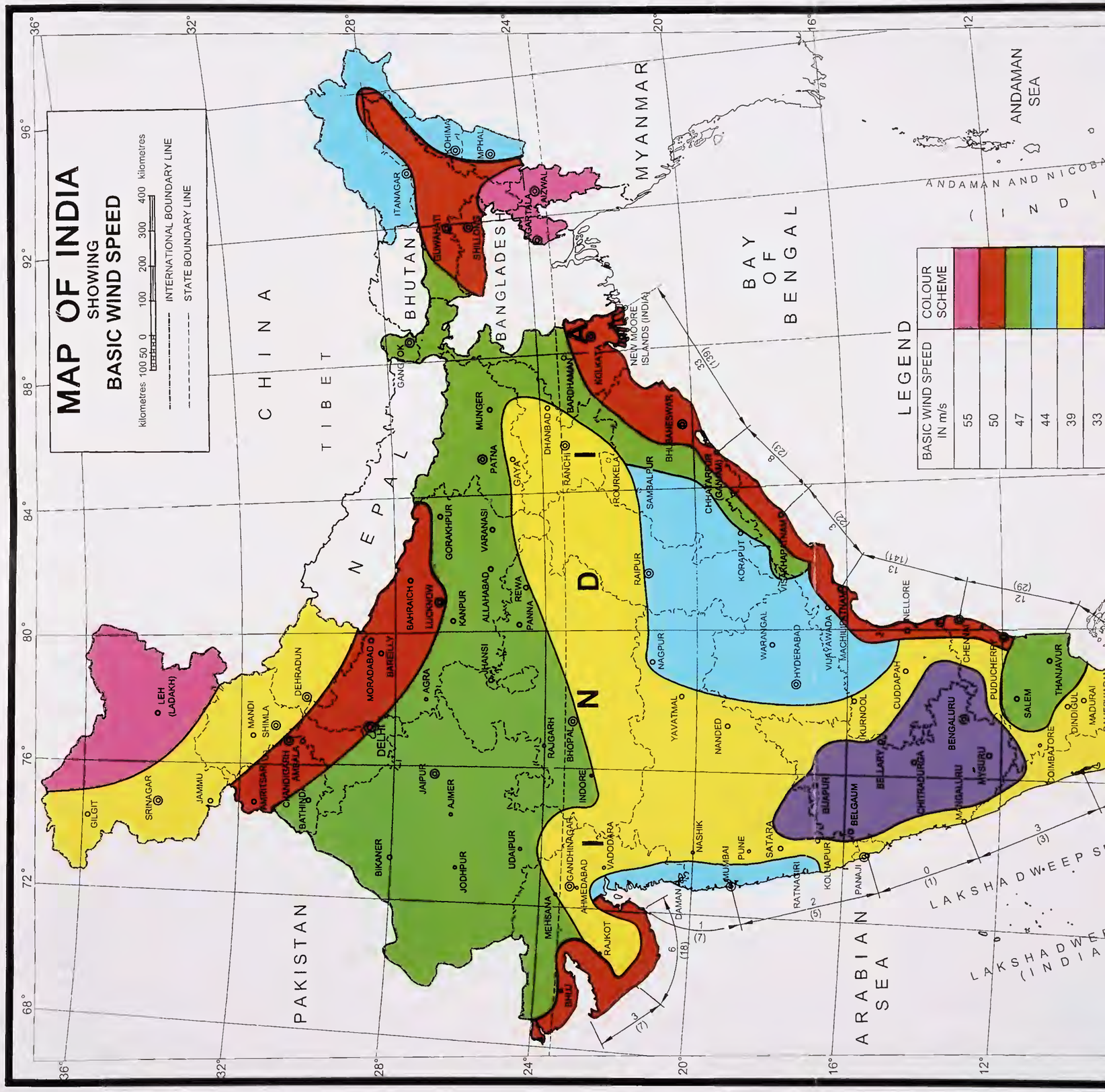

Table 5 Factors to Obtain Design Wind Speed Variation with Height in Different Terrains
(*Clause* 4.4.3.2.2)

Sl No.	Height (z) m	Terrain and Height Multiplier (k_2)			
		Terrain Category 1	Terrain Category 2	Terrain Category 3	Terrain Category 4
(1)	(2)	(3)	(4)	(5)	(6)
i)	10	1.05	1.00	0.91	0.80
ii)	15	1.09	1.05	0.97	0.80
iii)	20	1.12	1.07	1.01	0.80
iv)	30	1.15	1.12	1.06	0.97
v)	50	1.20	1.17	1.12	1.10
vi)	100	1.26	1.24	1.20	1.20
vii)	150	1.30	1.28	1.24	1.24
viii)	200	1.32	1.30	1.27	1.27
ix)	250	1.34	1.32	1.29	1.28
x)	300	1.35	1.34	1.31	1.30
xi)	350	1.35	1.35	1.32	1.31
xii)	400	1.35	1.35	1.34	1.32
xiii)	450	1.35	1.35	1.35	1.33
xiv)	500	1.35	1.35	1.35	1.34

NOTE — For intermediate values of height (*z*) in a given terrain category, use linear interpolation.

may vary depending on the direction of wind under consideration. Where sufficient meteorological information is available, the basic wind speed may be varied for specific wind direction.

4.4.3.2.4 *Changes in terrain categories*

The velocity profile for a given terrain category does not develop to full height immediately with the commencement of that terrain category but develop gradually to height (h_x) which increases with the fetch or upwind distance (x).

a) *Fetch and developed Height relationship* — The relation between the developed height (h_x) and the fetch (x) for wind-flow over each of the four terrain categories may be taken as given in Table 6.

b) For structures of heights more than the developed height (h_x) in Table 6, the velocity profile may be determined in accordance with the following:

   1) The less or least rough terrain, or
   2) The method described in Annex D.

4.4.3.3 *Topography (k_3 factor)*

The basic wind speed V_b given in Fig. 1 takes into account the general level of site above sea level. This does not allow for local topographic features such as hills, valleys, cliffs, escarpments, or ridges which can significantly affect wind speed in their vicinity. The effect of topography is to accelerate wind near the summits of hills or crests of cliffs, escarpments or ridges and decelerate the wind in valleys or near the foot of cliffs, steep escarpments, or ridges.

Table 6 Fetch and Developed Height Relationship
(*Clause* 4.4.3.2.4)

Sl No.	Fetch (x) km	Developed Height (h_x) m			
		Terrain Category 1	Terrain Category 2	Terrain Category 3	Terrain Category 4
(1)	(2)	(3)	(4)	(5)	(6)
i)	0.2	12	20	35	60
ii)	0.5	20	30	35	95
iii)	1	25	45	80	130
iv)	2	35	65	110	190
v)	5	60	100	170	300
vi)	10	80	140	250	450
vii)	20	120	200	350	500
viii)	50	180	300	400	500

The effect of topography shall be significant at a site when the upwind slope (θ) is more than about 3°, and below that, the value of k_3 may be taken to be equal to 1.0. The value of k_3 is confined in the range of 1.0 to 1.36 for slopes more than 3°. A method of evaluating the value of k_3 for values more than 1.0 is given in Annex E. It may be noted that the value of k_3 varies with height above ground level, with a maximum near the ground, and reducing to 1.0 at higher levels.

4.4.3.4 *Importance factor for cyclonic region (k_4 factor)*

The east coast of India is relatively more vulnerable for occurrences of severe cyclones. On the west coast, Gujarat is vulnerable for severe cyclones. Studies of wind speed and damage to buildings and structures point to the fact that the speeds given in the basic wind speed map are often exceeded during the cyclones. The effect of cyclonic storms is largely felt in a belt of approximately 60 km width at the coast. In order to ensure better safety of structures in this region (60 km wide on the east coast as well as on the Gujarat Coast), the following values of k_4, as recommended in good practice [6-1(5)] are stipulated as applicable according to the importance of the structure:

	k_4
Structures of post-cyclone importance for emergency services (such as cyclone shelters, hospitals, schools, communication towers, etc)	1.30
Industrial structures	1.15
All other structures	1.00

4.4.4 *Hourly Mean Wind Speed*

The hourly mean wind speed at height *z*, for different terrains can be obtained as:

$$\overline{V}_{z,H} = \overline{k}_{2,i} V_b$$

where

$\overline{k}_{2,i}$ = hourly mean wind speed factor for terrain category 'i'

$$= 0.1423\left[\ln\left(\frac{z}{z_{0,i}}\right)\right]\left(z_{0,i}\right)^{0.0706}$$

The design hourly mean wind speed at height z can be obtained as:

$$\overline{V}_{z,d} = \overline{V}_{z,H}\, k_1\, k_3\, k_4$$
$$= V_b k_1\, \overline{k}_{2,i}\, k_3\, k_4$$

4.4.5 *Turbulence Intensity*

The turbulence intensity variations with height for different terrains can be obtained using the relations given below:

a) *Terrain category 1*

$$I_{z,1} = 0.3507 - 0.0535 \log_{10}\left(\frac{z}{z_{0,1}}\right)$$

b) *Terrain category 2*

$$I_{z,2} = I_{z,1} + \frac{1}{7}\left(I_{z,4} - I_{z,1}\right)$$

c) *Terrain category 3*

$$I_{z,3} = I_{z,1} + \frac{3}{7}\left(I_{z,4} - I_{z,1}\right)$$

d) *Terrain category 4*

$$I_{z,4} = 0.466 - 0.1358 \log_{10}\left(\frac{z}{z_{0,4}}\right)$$

4.4.6 *Off-Shore Wind Velocity*

Cyclonic storms form far away from the sea coast and gradually reduce in speed as they approach the sea coast. Cyclonic storms generally extend up to about 60 km inland after striking the coast. Their effect on land is already reflected in basic wind speeds specified in Fig. 1. The influence of wind speed off the coast up to a distance of about 200 km may be taken as 1.15 times the value on the nearest coast in the absence of any definite wind data. The factor 1.15 shall be used in addition to k_4.

4.5 Wind Pressures and Forces on Buildings/ Structures

4.5.1 *General*

The wind load on a building/structure shall be calculated for,

a) the building/structure as a whole;
b) individual structural elements as roofs and walls; and
c) Individual cladding units including glazing and their fixings.

4.5.2 *Design Wind Pressure*

The wind pressure at any height above mean ground level shall be obtained by the following relationship between wind pressure and wind speed:

$$p_z = 0.6 V_z^2$$

where

p_z = wind pressure at height *z*, in N/m^2; and

V_z = design wind speed at height *z*, in m/s.

The design wind pressure p_d can be obtained as,

$$p_d = K_d\, K_a\, K_c\, p_z$$

where

K_d = wind directionality factor,

K_a = area averaging factor, and

K_c = combination factor [*see* **4.5.3.3.13**].

The value of p_d, however shall not be taken as less than 0.70 p_z.

NOTES

1 The coefficient 0.6 (in SI units) in the above formula depends on a number of factors and mainly on the atmospheric pressure and air temperature. The value chosen corresponds to the average Indian atmospheric conditions.

2 K_d should be taken as 1.0 when considering local pressure coefficients.

4.5.2.1 *Wind directionality factor, K_d*

Considering the randomness in the directionality of wind and recognizing the fact that pressure or force coefficients are determined for specific wind directions, it is specified that for buildings, solid signs, open signs, lattice frameworks, and trussed towers (triangular, square, rectangular) a factor of 0.90 may be used on the design wind pressure. For circular or near-circular forms this factor may be taken as 1.0.

For the cyclone affected regions also the factor K_d shall be taken as 1.0.

4.5.2.2 *Area averaging factor, K_a*

Pressure coefficients given in **4.5.3** are a result of averaging the measured pressure values over a given area. As the area becomes larger, the correlation of measured values decrease and *vice-versa*. The decrease in pressures due to larger areas may be taken into account as given in Table 7.

Table 7 Area Averaging Factor (K_a)
(*Clause* 4.5.2.2)

Sl No.	Tributary Area (A) m^2	Area Averaging Factor (K_a)[1)]
(1)	(2)	(3)
i)	≤ 10	1.0
ii)	25	0.9
iii)	≥ 100	0.8

[1)] Linear interpolation for intermediate values of tributary area, A is permitted.

4.5.2.2.1 *Tributary area*

a) *Overall structure* — For evaluating loads on frames the tributary area shall be taken as the centre-to-centre distances between frames multiplied by the individual panel dimension in the other direction together with overall pressure coefficients.

b) *Individual elements* — For beam type elements, purlins, etc, the tributary area shall be taken as effective span multiplied by spacing. The effective span is the actual span for mid span and cantilever load effects; and half the sum of adjacent spans for support moments and reactions.

c) For plate type elements, the area of individual plates between supports is taken as the tributary area.

d) For glass cladding, individual pane area of glass is the tributary area.

4.5.3 *Pressure Coefficients*

The pressure coefficients are always given for a particular surface or part of the surface of a building/structure. The wind load acting normal to a surface is obtained by multiplying the area of that surface or its appropriate portion by the pressure coefficient (C_p) and the design wind pressure at the height of the sur-face from the ground. The average values of these pressure coefficients for some building shapes are given in **4.5.3.2** and **4.5.3.3**.

Average values of pressure coefficients are given for critical wind directions in one or more quadrants. In order to determine the maximum wind load on the building/structure, the total load should be calculated for each of the critical directions shown from all quadrants. Where considerable variation of pressure occurs over a surface, it has been sub-divided and mean pressure coefficients given for each of its several parts.

In addition, areas of high local suction (negative pressure concentration) frequently occurring near the edges of walls and roofs are separately shown. Coefficients for the local effects should only be used for calculation of forces on these local areas affecting roof sheeting, glass panels, and individual cladding units including their fixtures. They should not be used for calculating force on entire structural elements such as roof, walls or structure as a whole.

NOTES

1 The pressure coefficients given in different tables have been obtained mainly from measurements on models in wind tunnels, and the great majority of data available has been obtained in conditions of relatively smooth flow. Where sufficient field data exists as in the case of rectangular buildings, values have been obtained to allow for turbulent flow.

2 In recent years, wall glazing and cladding design has been a source of major concern. Although of less consequence than the collapse of main structures, damage to glass can be hazardous and cause considerable financial losses.

3 For pressure coefficients for structures not covered herein, reference may be made to specialist literature on the subject or advice may be sought from specialists in the subject.

4.5.3.1 *Wind load on individual members*

When calculating the wind load on individual structural elements such as roofs and walls, and individual cladding units and their fittings, it is essential to take account of the pressure difference between opposite faces of such elements or units. For clad structures, it is, therefore, necessary to know the internal pressure as well as the external pressure. Then the wind load, F (in N), acting in a direction normal to the individual structural element or cladding unit is:

$$F = (C_{pe} - C_{pi})\, A\, p_d$$

where

C_{pe} = external pressure coefficient;

C_{pi} = internal pressure coefficient;

A = surface area of structural element or cladding unit, in m^2; and

p_d = design wind pressure, in N/m^2.

NOTES

1 If the surface design pressure varies with height, the surface areas of the structural element may be sub-divided so that the specified pressures are taken over appropriate areas.

2 Positive wind load indicates the force acting towards the structural element and negative away from it.

4.5.3.2 *Internal pressure coefficients*

Internal air pressure in a building depends upon the degree of permeability of cladding to the flow of air. The internal air pressure may be positive or negative depending on the direction of flow of air in relation to openings in the buildings.

a) In the case of buildings where the claddings permit the flow of air with openings not more than about 5 percent of the wall area but where there are no large openings, it is necessary to consider the possibility of the internal pressure being positive or negative. Two design

conditions shall be examined, one with an internal pressure coefficient of +0.2 and another with an internal pressure coefficient of –0.2.

The internal pressure coefficient is algebraically added to the external pressure coefficient and the analysis which indicates greater distress of the member shall be adopted. In most situations a simple inspection of the sign of external pressure will at once indicate the proper sign of the internal pressure coefficient to be taken for design.

NOTE — The term normal permeability relates to the flow of air commonly afforded by claddings not only through open windows and doors, but also through the slits round the closed windows and doors and through chimneys, ventilators and through the joints between roof coverings, the total open area being less than 5 percent of area of the walls having the openings.

b) *Buildings/structures with medium and large openings* — Buildings/structures with medium and large openings may also exhibit either positive or negative internal pressure depending upon the direction of wind. Buildings/structures with medium openings between about 5 to 20 percent of wall area shall be examined for an internal pressure coefficient of +0.5 and later with an internal pressure coefficient of –0.5, and the analysis which produces greater distress of the member shall be adopted. Buildings/structures with large openings, that is, openings larger than 20 percent of the wall area shall be examined once with an internal pressure coefficient of +0.7 and again with an internal pressure coefficient of –0.7, and the analysis which produces greater distress of the member shall be adopted.

Buildings/structures with one open side or opening exceeding 20 percent of wall area may be assumed to be subjected to internal positive pressure or suction similar to those of buildings with large openings. A few examples of buildings with one side openings are shown in Fig. 2 indicating values of internal pressure coefficients with respect to the direction of wind.

4.5.3.3 *External pressure coefficients*

4.5.3.3.1 *Walls*

The average external pressure coefficient for the walls of clad buildings of rectangular plan shall be as given in Table 8. In addition, local pressure concentration coefficients are also given.

4.5.3.3.2 *Pitched, hipped and monoslope roofs of clad buildings*

The average external pressure coefficients and pressure concentration coefficients for pitched roofs of rectangular clad building shall be as given in Table 9. Where no pressure concentration coefficients are given, the average coefficients shall apply. The pressure coefficients on the underside of any overhanging roof shall be taken in accordance with **4.5.3.3.5**.

NOTES

1 The pressure concentration shall be assumed to act outward (suction pressure) at the ridges, eaves, cornices and 90° corners of roofs.

2 The pressure concentration shall not be included with the net external pressure when computing overall loads.

3 For hipped roofs, pressure coefficients (including local values) may be taken on all the four slopes, as appropriate from Table 9, and be reduced by 20 percent for the hip slope.

For mono slope roofs of rectangular clad buildings, the average pressure coefficient and pressure concentration coefficient for monoslope (lean-to) roofs of rectangular clad buildings shall be as given in Table 10.

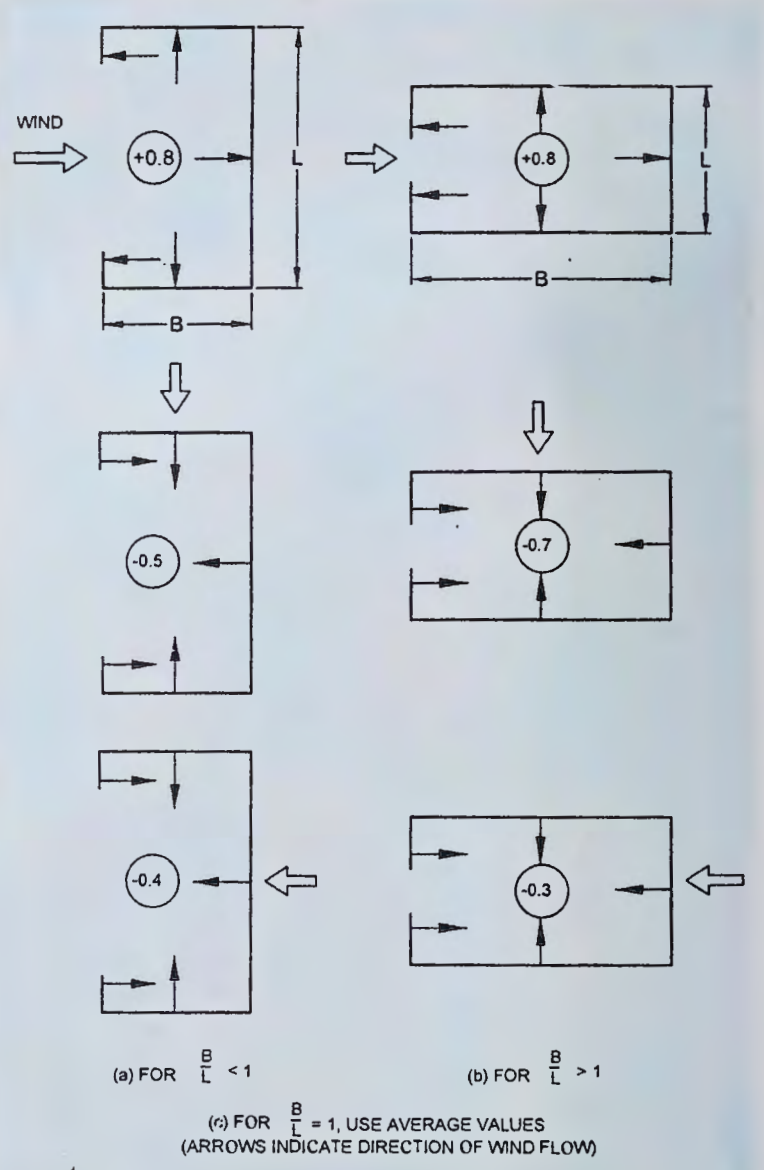

FIG. 2 VALUES OF INTERNAL PRESSURE COEFFICIENTS WITH RESPECT TO THE DIRECTION OF WIND FOR BUILDINGS WITH ONE SIDE OPENINGS

Table 8 External Pressure Coefficients (C_{pe}) for Walls of Rectangular Clad Buildings

(*Clause* 4.5.3.3.1)

Building Height Ratio	Building Plan Ratio	Elevation	Plan	Wind Angle Θ Degree	C_{pe} for Surface A	B	C	D	Local C_{pe}
$\frac{h}{w} \le \frac{1}{2}$	$1 < \frac{l}{w} \le \frac{3}{2}$	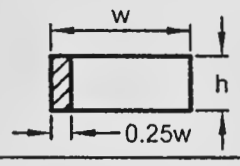	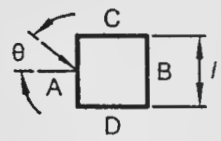	0 90	+ 0.7 - 0.5	- 0.2 - 0.5	- 0.5 + 0.7	- 0.5 - 0.2	- 0.8
	$\frac{3}{2} < \frac{l}{w} < 4$	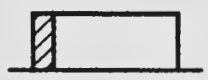	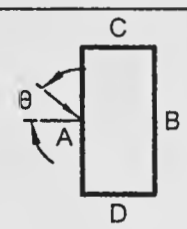	0 90	+ 0.7 - 0.5	- 0.25 - 0.5	- 0.6 + 0.7	- 0.6 - 0.1	- 1.0
$\frac{1}{2} < \frac{h}{w} \le \frac{3}{2}$	$1 < \frac{l}{w} \le \frac{3}{2}$	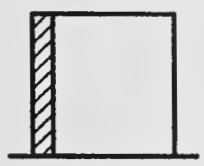	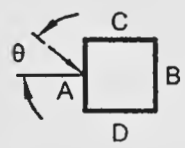	0 90	+ 0.7 - 0.6	- 0.25 - 0.6	- 0.6 + 0.7	- 0.6 - 0.25	- 1.1
	$\frac{3}{2} < \frac{l}{w} < 4$	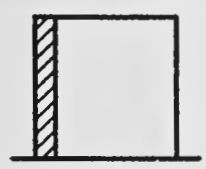	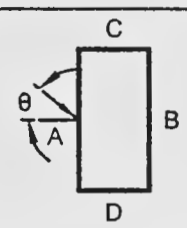	0 90	+ 0.7 - 0.5	- 0.3 - 0.5	- 0.7 + 0.7	- 0.7 - 0.1	- 1.1
$\frac{3}{2} < \frac{h}{w} < 6$	$1 < \frac{l}{w} \le \frac{3}{2}$	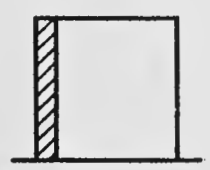	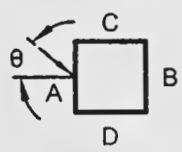	0 90	+ 0.8 - 0.8	- 0.25 - 0.8	- 0.8 + 0.8	- 0.8 - 0.25	- 1.2
	$\frac{3}{2} < \frac{l}{w} < 4$	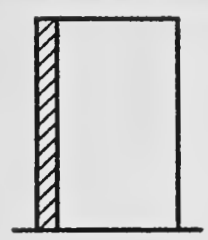	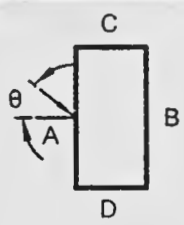	0 90	+ 0.7 - 0.5	- 0.4 - 0.5	- 0.7 + 0.8	- 0.7 - 0.1	- 1.2
$\frac{h}{w} \ge 6$	$\frac{l}{w} = \frac{3}{2}$	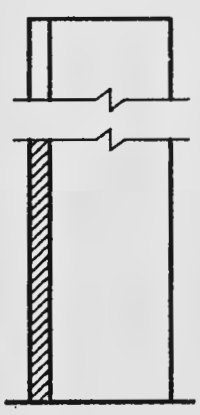	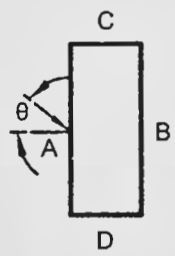	0 90	+ 0.95 - 0.8	- 1.85 - 0.8	- 0.9 + 0.9	- 0.9 - 0.85	1.25
	$\frac{l}{w} = 1.0$			0 90	+ 0.95 - 0.7	- 1.25 - 0.7	- 0.7 + 0.95	- 0.7 - 1.25	1.25
	$\frac{l}{w} = 2$			0 90	+ 0.85 - 0.75	- 0.75 - 0.75	- 0.75 + 0.85	- 0.75 - 0.75	1.25

NOTE — *h* is the height to eaves or parapet, *l* is the greater horizontal dimension of a building and *w* is the lesser horizontal dimension of a building.

Table 9 External Pressure Coefficients (C_{pe}) for Pitched Roofs of Rectangular Clad Buildings

(*Clause* 4.5.3.3.2)

Building Height Ratio		Roof Angle α Degree	Wind Angle θ 0° EF	Wind Angle θ 0° GH	Wind Angle θ 90° EG	Wind Angle θ 90° FH	Local Coefficients			
$\frac{h}{w} \leq \frac{1}{2}$	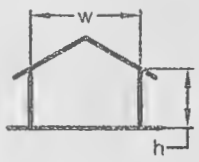	0	- 0.8	- 0.4	- 0 8	- 0.4	- 2.0	- 2.0	- 2.0	----
		5	- 0.9	- 0.4	- 0.8	- 0.4	- 1.4	- 1.2	- 1.2	- 1.0
		10	- 1.2	- 0.4	- 0.8	- 0.6	- 1.4	- 1.4		- 1.2
		20	- 0.4	- 0 4	- 0 7	- 0.6	- 1.0			- 1.2
		30	0	- 0.4	- 0.7	- 0.6	- 0.8			- 1.1
		45	+ 0.3	- 0.5	- 0.7	- 0.6				- 1.1
		60	+ 0.7	- 0.6	- 0.7	- 0.6				- 1.1
$\frac{1}{2} < \frac{h}{w} \leq \frac{3}{2}$	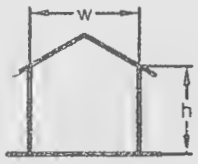	0	- 0.8	- 0.6	- 1.0	- 0.6	- 2.0	- 2.0	- 2.0	----
		5	- 0.9	- 0.6	- 0.9	- 0.6	- 2.0	- 2.0	- 1.5	- 1.0
		10	- 1.1	- 0.6	- 0.8	- 0.6	- 2.0	- 2.0	- 1.5	- 1.2
		20	- 0.7	- 0.5	- 0.8	- 0.6	- 1.5	- 1.5	- 1.5	- 1.0
		30	- 0.2	- 0.5	- 0.8	- 0.8	- 1.0			- 1.0
		45	+ 0.2	- 0.5	- 0.8	- 0.8				
		60	+ 0.6	- 0.5	- 0.8	- 0.8				
$\frac{3}{2} < \frac{h}{w} < 6$		0	- 0.7	- 0.6	- 0.9	- 0.7	- 2.0	- 2.0	- 2.0	----
		5	- 0.7	- 0.6	- 0.8	- 0.8	- 2.0	- 2.0	- 1.5	- 1.0
		10	- 0.7	- 0.6	- 0.8	- 0.8	- 2.0	- 2.0	- 1.5	- 1.2
		20	- 0.8	- 0.6	- 0.8	- 0.8	- 1.5	- 1.5	- 1.5	- 1.2
		30	- 1.0	- 0.5	- 0.8	- 0.7	- 1.5			
		40	- 0.2	- 0.5	- 0.8	- 0.7	- 1.0			
		50	+ 0.2	- 0.5	- 0.8	- 0.7				
		60	+ 0.5	- 0.5	- 0.8	- 0.7				

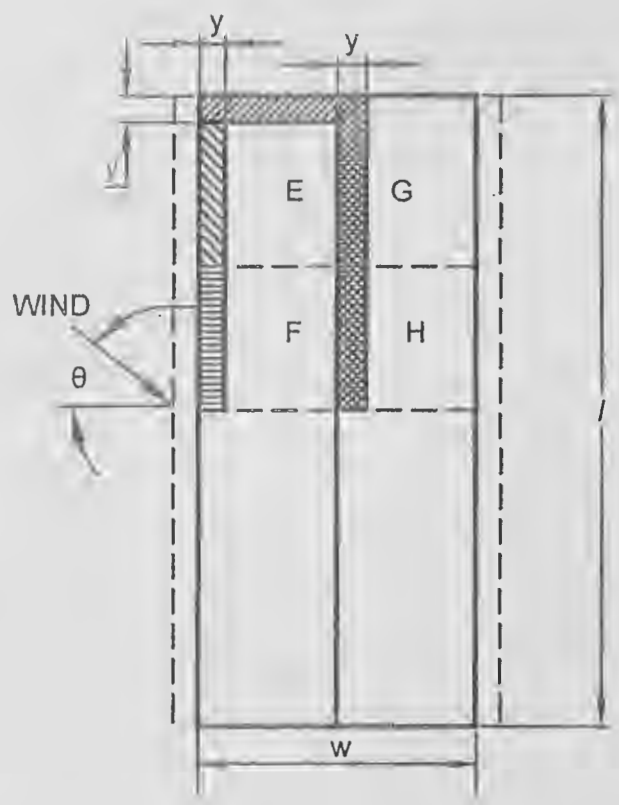

KEY PLAN

$y = h$ or $0.15\ w$

Whichever is the lesser.

NOTES

1 h is the height to eaves or parapet and w is the lesser horizontal dimension of a building.

2 Where no local coefficients are given, the overall coefficient apply.

3 For hipped roofs the local coefficient for the hip ridge may be conservatively taken as the appropriate ridge value.

4 w and l are dimensions between the walls excluding overhangs.

Table 10 External Pressure Coefficients (C_{pe}) for Monoslope Roofs for Rectangular Clad Buildings $\frac{h}{w}<2$
(*Clause* 4.5.3.3.2)

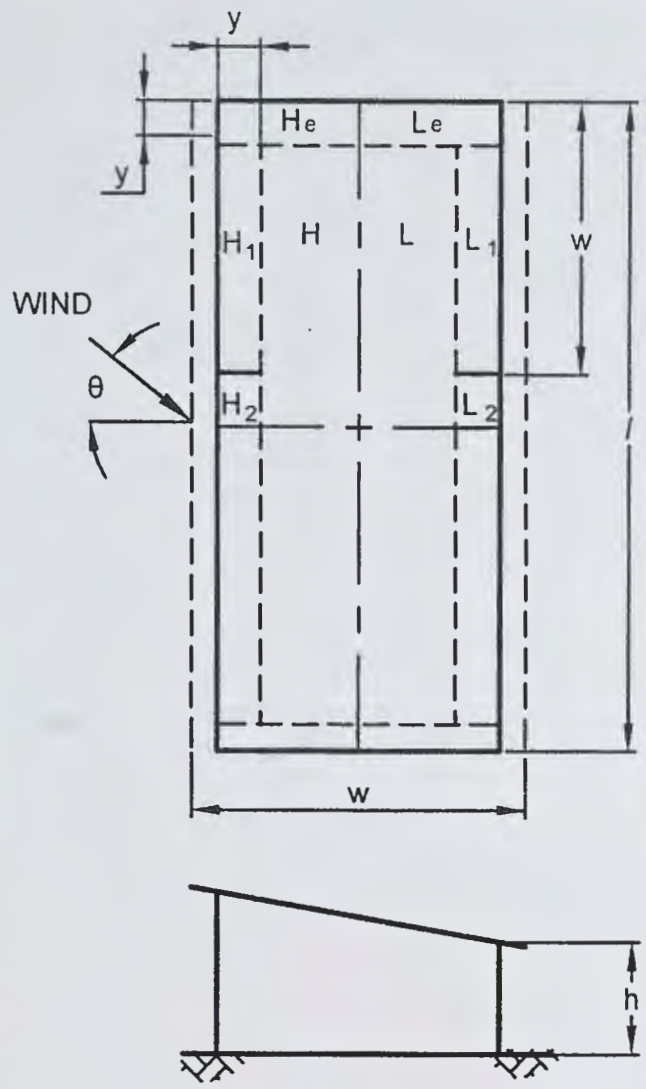

$y = h$ or $0.15\,w$
Whichever is the lesser.

NOTE :- Area *H* and area *L* refer to the whole quadrant.

Roof Angle α	Wind Angle θ										Local Coefficients (C_{pe})					
	0°		45°		90°		135°		180°							
Degree	*H*	*L*	*H*	*L*	*H* / *L* *	*H* / *L* **	*H*	*L*	*H*	*L*	H_1	H_2	L_1	L_2	H_e	L_e
5	- 1.0	- 0.5	- 1.0	- 0.9	- 1.0	- 0.5	- 0.9	- 1.0	- 0.5	- 1.0	- 2.0	- 1.5	- 2.0	- 1.5	- 2.0	- 2.0
10	- 1.0	- 0.5	- 1.0	- 0.8	- 1.0	- 0.5	- 0.8	- 1.0	- 0.4	- 1.0	- 2.0	- 1.5	- 2.0	- 1.5	- 2.0	- 2.0
15	- 0.9	- 0.5	- 1.0	- 0.7	- 1.0	- 0.5	- 0.6	- 1.0	- 0.3	- 1.0	- 1.8	- 0.9	- 1.8	- 1.4	- 2.0	- 2.0
20	- 0.8	- 0.5	- 1.0	- 0.6	- 0.9	- 0.5	- 0.5	- 1.0	- 0.2	- 1.0	- 1.8	- 0.8	- 1.8	- 1.4	- 2.0	- 2.0
25	- 0.7	- 0.5	- 1.0	- 0.6	- 0.8	- 0.5	- 0.3	- 0.9	- 0.1	- 0.9	- 1.8	- 0.7	- 0.9	- 0.9	- 2.0	- 2.0
30	- 0.5	- 0.5	- 1.0	- 0.6	- 0.8	- 0.5	- 0.1	- 0.6	0	- 0.6	- 1.8	- 0.5	- 0.5	- 0.5	- 2.0	- 2.0

* Applied to length *w* / 2 from wind-ward end.
** Applies to remainder

NOTES

1 *h* is the height of eaves at lower side, *l* is the greater horizontal dimensions of a building and w is the lesser horizontal dimension of a building.

2 *l* and *w* are overall length and width including overhangs.

4.5.3.3.3 *Canopy roofs with* ($1/4 < h/w < 1$ *and* $1 < L/w < 3$)

The pressure coefficients are given in Tables 11 and 12 separately for monopitch and double pitch canopy roofs such as open-air parking garages, shelter areas, outdoor areas, railway platforms, stadiums and theatres. The coefficients take into account of the combined effect of the wind exerted on and under the roof for all wind directions; the resultant is to be taken normal to the canopy. Where the local coefficients overlap, the greater of the two given values should be taken. However, the effect of partial closures of one side and or both sides, such as those due to trains, buses and stored materials shall be foreseen and taken into account.

The solidity ratio, ϕ, is equal to the area of obstructions under the canopy divided by the gross area under the canopy, both areas normal to the wind direction. $\phi = 0$ represents a canopy with no obstructions underneath. $\phi = 1$ represents the canopy fully blocked with contents to the downwind eaves. Values of C_p for intermediate solidities may be linearly interpolated between these two extremes, and apply upwind of the position of maximum blockage only. For downwind of the position of maximum blockage, the coefficients for $\phi = 0$ may be used.

In addition to the forces due to the pressures normal to the canopy, there will be horizontal loads on the canopy due to the wind pressure on any fascia and to friction over the surface of the canopy. For any wind direction, only the greater of these two forces need to be taken into account. Fascia loads should be calculated on the area of the surface facing the wind, using a force coefficient of 1.3. Frictional drag should be calculated using the coefficients given in **4.5.4.1**.

NOTE — Tables 13 to 18 may be used to get internal and external pressure coefficients for pitches and troughed free roofs for some specific cases for which aspect ratios and roof slopes have been specified. However, while using Tables 13 to 18 any significant departure from it should be investigated carefully. No increase shall be made for local effects except as indicated.

4.5.3.3.4 *Pitched and saw-tooth roofs of multi-span buildings*

For pitched and saw-tooth roofs of multi-span buildings, the external average pressure coefficients shall be as given in Tables 19 and 20, respectively provided that all the spans shall be equal and the height to the eaves shall not exceed the span.

4.5.3.3.5 *Pressure coefficients on overhangs from roofs*

The pressure coefficients on the top over-hanging portion of the roofs shall be taken to be the same as that of the nearest top portion of the non-overhanging portion of the roofs. The pressure coefficients for the underside surface of the over-hanging portions shall be taken as follows and shall be taken as positive, if the overhanging portion is on the windward side:

1) 1.25, if the overhanging slopes downwards;
2) 1.00, if the overhanging is horizontal; and
3) 0.75, if the overhanging slopes upwards.

For overhanging portions on sides other than windward side, the average pressure coefficients on adjoining walls may be used.

4.5.3.3.6 *Curved roofs*

For curved roofs the external pressure coefficients shall be as given in Table 21. Allowance for local effects shall be made in accordance with Table 9. Two values of C_2 have been given for elevated curved roofs. Both the load cases have to be analysed, and critical load effects are to be considered in design.

4.5.3.3.7 *Cylindrical structures*

For the purpose of calculating the wind pressure distribution around a cylindrical structure of circular cross-section, the value of external pressure coefficients given in Table 22 may be used, provided that the Reynolds number is more than 10 000. They may be used for wind blowing normal to the axis of cylinders having axis normal to the ground plane and cylinders having their axis parallel to the ground plane. '*h*' is height of a vertical cylinder or length of a horizontal cylinder. Where there is a free flow of air around both ends, *h* is to be taken as half the length when calculating *h/D* ratio.

In the calculation of resultant load on the periphery of the cylinder, the value of C_{pi} shall be taken into account. For open ended cylinders, C_{pi} shall be taken as follows:

a) – 0.8, where *h/D* is more than or equal to 0.3; and
b) – 0.5, where *h/D* is less than 0.3.

4.5.3.3.8 *Roofs and bottoms of cylindrical elevated structures*

The external pressure coefficients for roofs and bottoms of cylindrical elevated structures shall be as given in Table 23. Alternately, the pressure distribution given in Fig. 3 can be used together with the force coefficients given in Table 28 for the cylindrical portion.

4.5.3.3.9 *Combined roofs*

The average external pressure coefficients for combined roofs are shown in Table 24.

Table 11 Pressure Coefficients for Monoslope Free Roofs

(*Clause* 4.5.3.3.3)

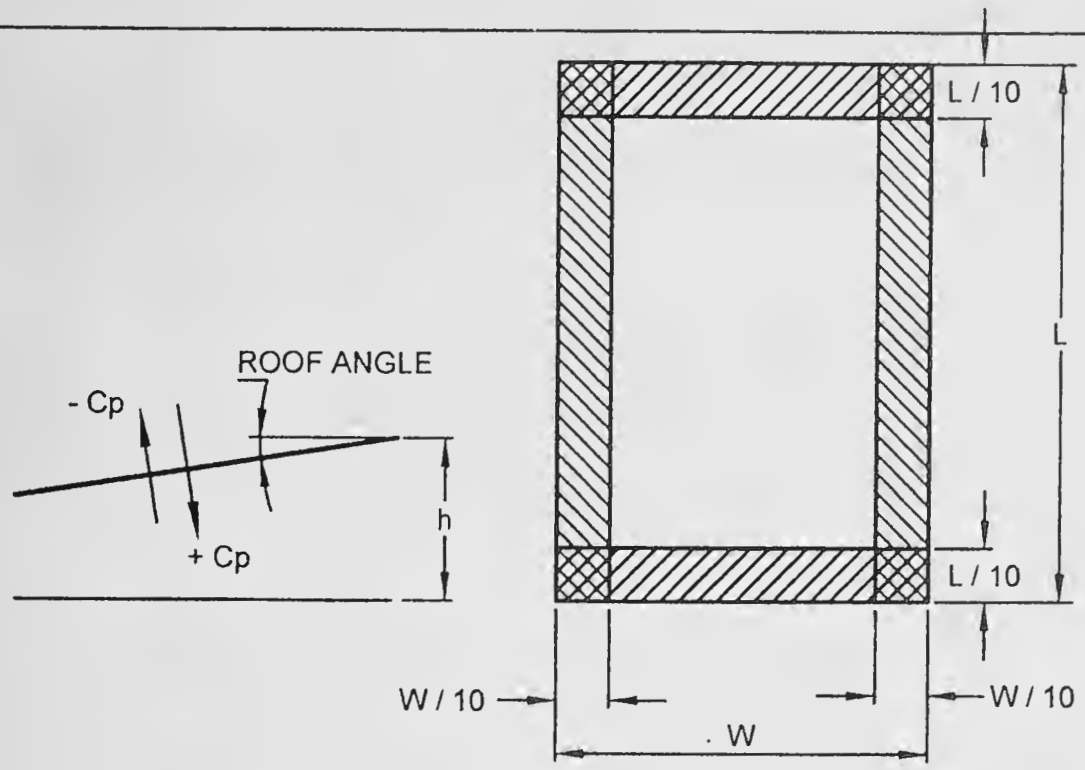

Roof Angle α Degree	Solidity Ratio Φ	Maximum (Largest + ve) and Minimum (Largest - ve) Pressure Coefficients			
		Overall Coefficients	Local Coefficients		
			▭	▨	▩
0	All values of Φ	+ 0.2	+ 0.5	+ 1.8	+ 1.1
5		+ 0.4	+ 0.8	+ 2.1	+ 1.3
10		+ 0.5	+ 1.2	+ 2.4	+ 1.6
15		+ 0.7	+ 1.4	+ 2.7	+ 1.8
20		+ 0.8	+ 1.7	+ 2.9	+ 2.1
25		+ 1.0	+ 2.0	+ 3.1	+ 2.3
30		+ 1.2	+ 2.2	+ 3.2	+ 2.4
0	Φ = 0	- 0.5	- 0.6	- 1.3	- 1.4
	Φ = 1	- 1.0	- 1.2	- 1.8	- 1.9
5	Φ = 0	- 0.7	- 1.1	- 1.7	- 1.8
	Φ = 1	- 1.1	- 1.6	- 2.2	- 2.3
10	Φ = 0	- 0.9	- 1.5	- 2.0	- 2.1
	Φ = 1	- 1.3	- 2.1	- 2.6	- 2.7
15	Φ = 0	- 1.1	- 1.8	- 2.4	- 2.5
	Φ = 1	- 1.4	- 2.3	- 2.9	- 3.0
20	Φ = 0	- 1.3	- 2.2	- 2.8	- 2.9
	Φ = 1	- 1.5	- 2.6	- 3.1	- 3.2
25	Φ = 0	- 1.6	- 2.6	- 3.2	- 3.2
	Φ = 1	- 1.7	- 2.8	- 3.5	- 3.5
30	Φ = 0	- 1.8	- 3.0	- 3.8	- 3.6
	Φ = 1	- 1.8	- 3.0	- 3.8	- 3.6

NOTES

1 For monopitch canopies the centre of pressure should be taken to act at 0.3*w* from the windward edge.

2 *W* and *L* are overall width and length including overhangs.

Table 12 Pressure Coefficients for Free Standing Double Sloped Roofs

(*Clause* 4.5.3.3.3)

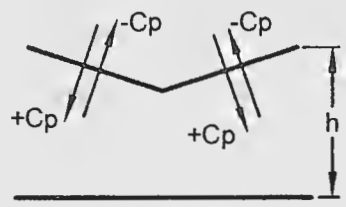

- ve ROOF ANGLE

+ ve ROOF ANGLE

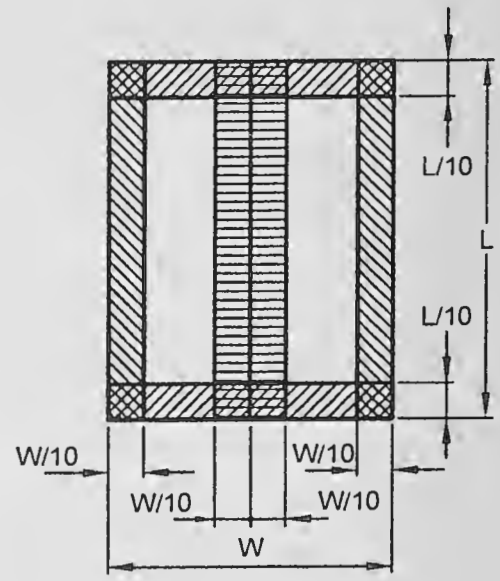

KEY PLAN

Roof Angle α Degree	Solidity Ratio Φ	Maximum (Largest + ve) and Minimum (Largest - ve) Pressure Coefficients				
		Overall Coefficients	Local Coefficients			
			▭	▨	▧	▤
- 20	All values of Φ	+ 0.7	+ 0.8	+ 1.6	+ 0.6	+ 1.7
- 15		+ 0.5	+ 0.6	+ 1.5	+ 0.7	+ 1.4
- 10		+ 0.4	+ 0.6	+ 1.4	+ 0.8	+ 1.1
- 5		+ 0.3	+ 0.5	+ 1.5	+ 0.8	+ 0.8
+ 5		+ 0.3	+ 0.6	+ 1.8	+ 1.3	+ 0.4
+ 10		+ 0.4	+ 0.7	+ 1.8	+ 1.4	+ 0.4
+ 15		+ 0.4	+ 0.9	+ 1.9	+ 1.4	+ 0.4
+ 20		+ 0.6	+ 1.1	+ 1.9	+ 1.5	+ 0.4
+ 25		+ 0.7	+ 1.2	+ 1.9	+ 1.6	+ 0.5
+ 30		+ 0.9	+ 1.3	+ 1.9	+ 1.6	+ 0.7
- 20	Φ = 0	- 0.7	- 0.9	- 1.3	- 1.6	- 0.6
	Φ = 1	- 0.9	- 1.2	- 1.7	- 1.9	- 1.2
- 15	Φ = 0	- 0.6	- 0.8	- 1.3	- 1.6	- 0.6
	Φ = 1	- 0.8	- 1.1	- 1.7	- 1.9	- 1.2
- 10	Φ = 0	- 0.6	- 0.8	- 1.3	- 1.5	- 0.6
	Φ = 1	- 0.8	- 1.1	- 1.7	- 1.9	- 1.3
- 5	Φ = 0	- 0.5	- 0.7	- 1.3	- 1.6	- 0.6
	Φ = 1	- 0.8	- 1.5	- 1.7	- 1.9	- 1.4
+ 5	Φ = 0	- 0.6	- 0.6	- 1.4	- 1.4	- 1.1
	Φ = 1	- 0.9	- 1.3	- 1.8	- 1.8	- 2.1
+ 10	Φ = 0	- 0.7	- 0.7	- 1.5	- 1.4	- 1.4
	Φ = 1	- 1.1	- 1.4	- 2.0	- 1.8	- 2.4
+ 15	Φ = 0	- 0.8	- 0.9	- 1.7	- 1.4	- 1.8
	Φ = 1	- 1.2	- 1.5	- 2.2	- 1.9	- 2.8
+ 20	Φ = 0	- 0.9	- 1.2	- 1.8	- 1.4	- 2.0
	Φ = 1	- 1.3	- 1.7	- 2.3	- 1.9	- 3.0
+ 25	Φ = 0	- 1.0	- 1.4	- 1.9	- 1.4	- 2.0
	Φ = 1	- 1.4	- 1.9	- 2.4	- 2.1	- 3.0
+ 30	Φ = 0	- 1.0	- 1.4	- 1.9	- 1.4	- 2.0
	Φ = 1	- 1.4	- 2.1	- 2.6	- 2.2	- 3.0

Each slope of a duopitch canopy should be able to withstand forces using both the maximum and the minimum coefficients, and the whole canopy should be able to support forces using one slope at the maximum coefficient with the other slope at the minimum coefficient. For duopitch canopies the centre of pressure should be taken to act at the centre of each slope.

NOTE—*W* and *L* are overall width and length including overhangs.

Table 13 Pressure Coefficients (Top and Bottom) for Pitched Roofs, Roof Slope, α = 30°
(*Clause* 4.5.3.3.3)

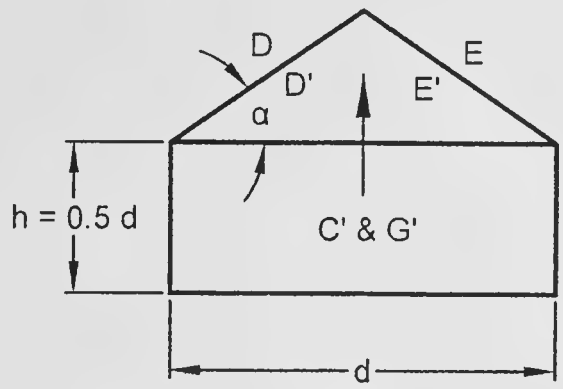

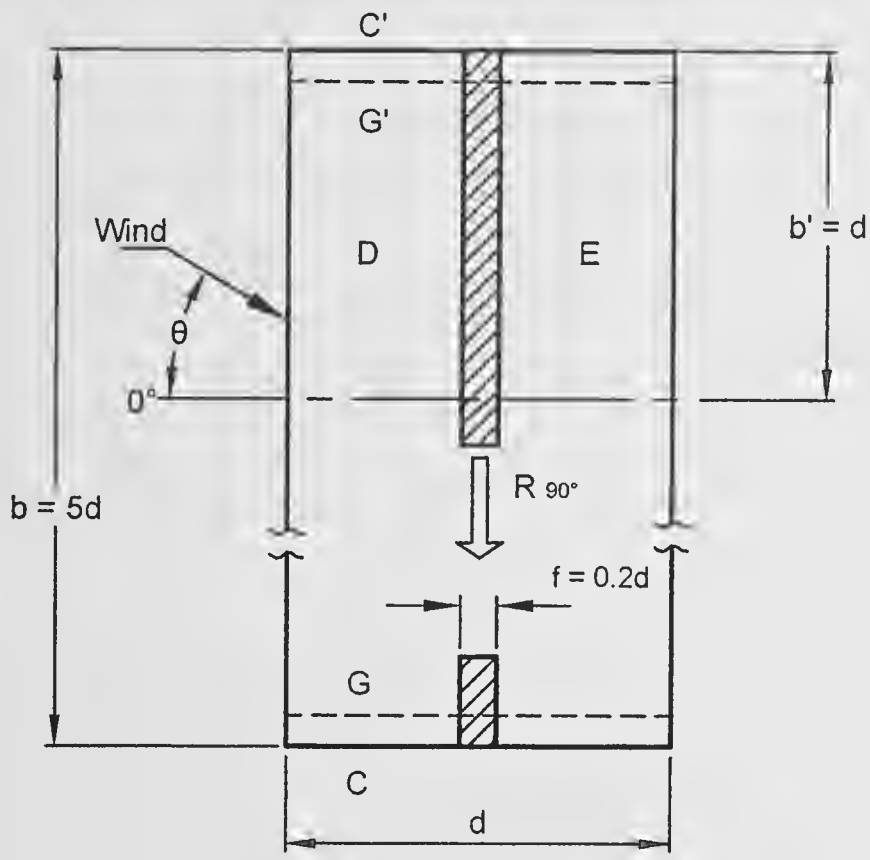

Roof slope α = 30°
θ = 0°- 45°, *D, D', E, E'* full length.
θ = 90°, *D, D', E, E'* part length
b', thereafter C_p = 0.

Wind Angle θ	Pressure Coefficients, C_p							
	D	*D'*	*E*	*E'*	End Surfaces			
					C	*C'*	*G*	*G'*
0°	+ 0.6	- 1.0	- 0.5	- 0.9				
45°	+ 0.1	- 0.3	- 0.6	- 0.3				
90°	- 0.3	- 0.4	- 0.3	- 0.4	- 0.3	+ 0.8	+ 0.3	- 0.4
For all value of θ	For J : C_pTop = 1.0, $C_p$bottom = - 0.2 Tangentially acting friction : $R_{90°} = 0.05 p_d bd$							

Table 14 Pressure Coefficients (Top and Bottom) for Pitched Free Roofs, $\alpha = 30°$ With Effects of Train or Stored Material

(*Clause* 4.5.3.3.3)

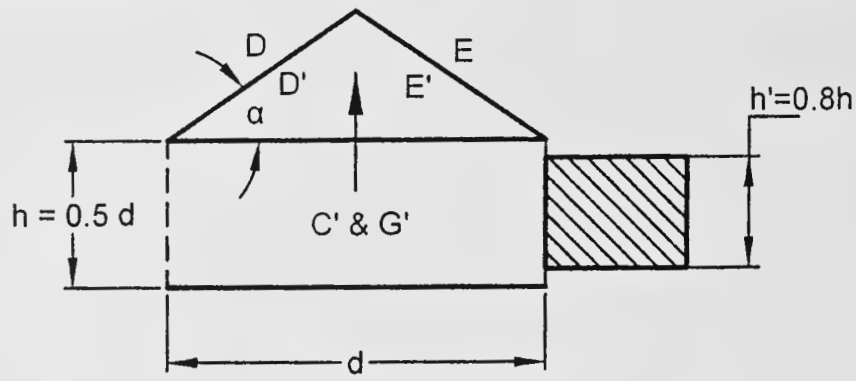

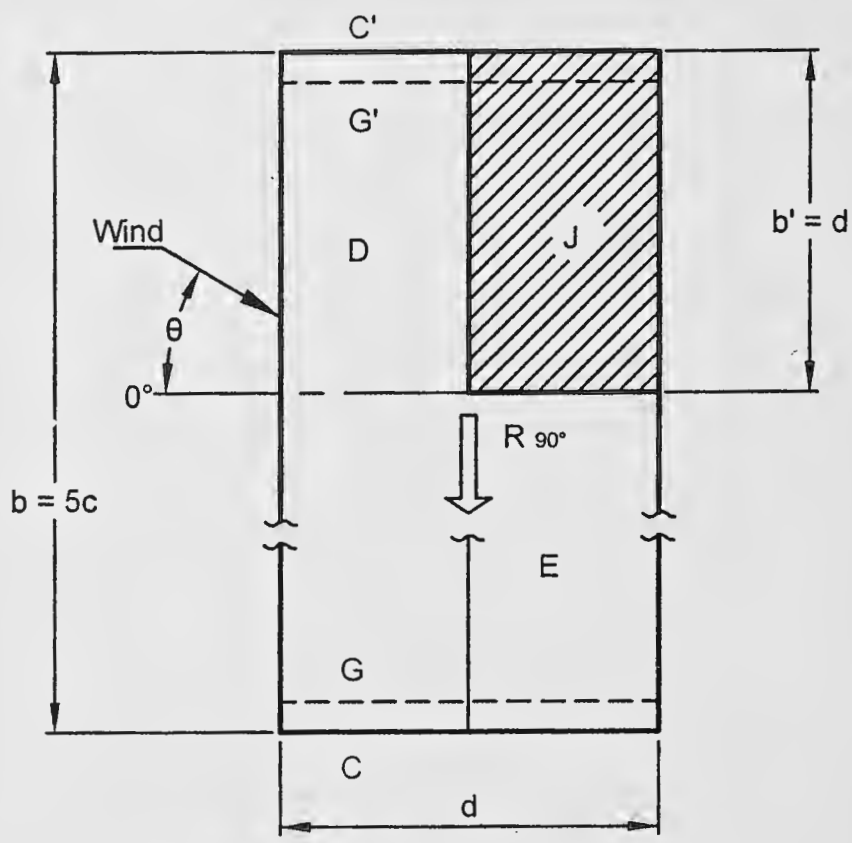

Roof slope $\alpha = 30°$

Effects of trains or stored materials.

$\theta = 0° - 45°$, or $135° - 180°$, *D, D', E, E'* full length.

$\theta = 90°$, *D, D', E, E'* part length *b'*, thereafter $C_p = 0$.

Wind Angle θ	Pressure Coefficients, C_p							
	D	*D'*	*E*	*E'*	End Surfaces			
					C	*C'*	*G*	*G'*
0°	+ 0.1	+ 0.8	- 0.7	+ 0.9				
45°	- 0.1	+ 0.5	- 0.8	+ 0.5				
90°	- 0.4	- 0.5	- 0.4	- 0.5	- 0.3	+ 0.6	+ 0.3	- 0.4
180°	- 0.3	- 0.6	+ 0.4	- 0.6				
For all value of θ	For J : C_pTop = -1.5, C_p bottom = 0.5 Tangentially acting friction : $R_{90°} = 0.05\, p_d\, bd$							

Table 15 Pressure Coefficients (Top and Bottom) for Pitched Free Roofs, α = 10°
(*Clause* 4.5.3.3.3)

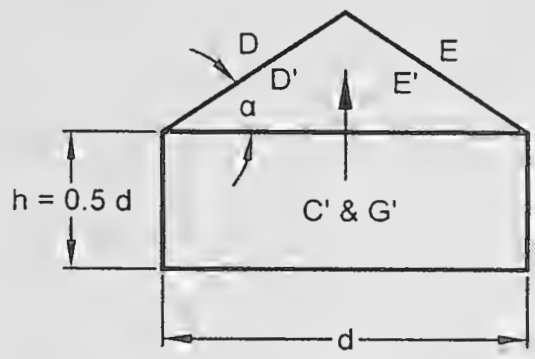

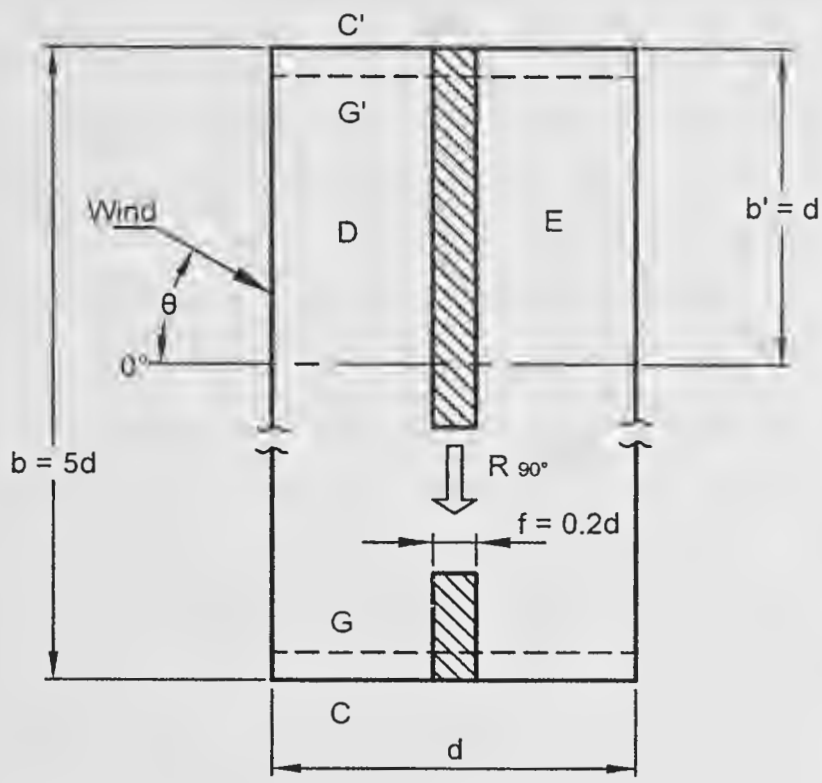

Roof slope α = 10°
θ = 0°- 45°, *D, D', E, E'* full length.
θ = 90°, *D, D', E, E'* part length
b', thereafter C_p = 0.

Wind Angle θ	Pressure Coefficients, C_p							
	D	*D'*	*E*	*E'*	End Surfaces			
					C	*C'*	*G*	*G'*
0°	- 1.0	+ 0.3	- 0.5	+ 0.2				
45°	- 0.3	+ 0.1	- 0.3	+ 0.1				
90°	- 0.3	0	- 0.3	0	- 0.4	+ 0.8	+ 0.3	- 0.6
For all value of θ	For *f* : C_pTop = - 1.0, $C_p$bottom = 0.4 Tangentially acting friction : $R_{90°} = 0.1 p_d bd$							

Table 16 Pressure Coefficients (Top and Bottom) for Pitched Free Roofs $\alpha = 10°$ With Effects of Train or Stored Materials

(*Clause* 4.5.3.3.3)

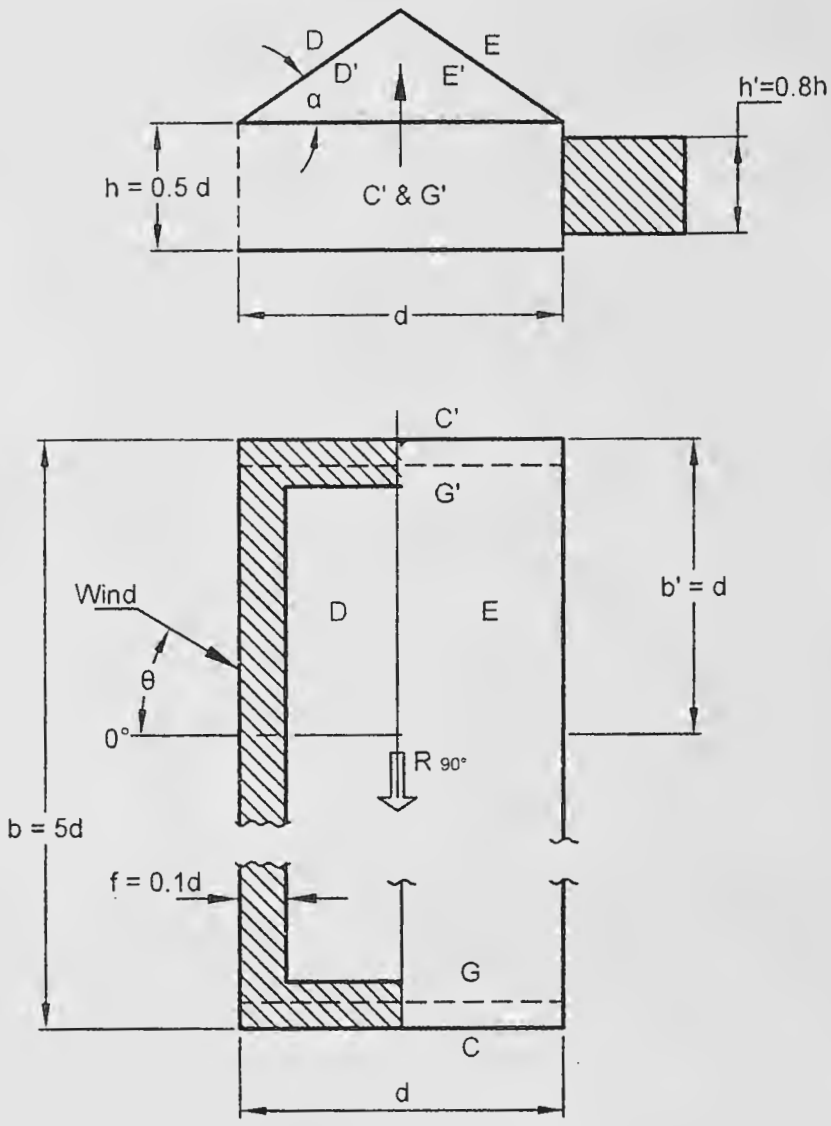

Roof slope $\alpha = 10°$
Effects of trains or stored materials.
θ = 0°- 45°, or 135° - 180°, *D, D', E, E'* full length.
θ = 90°, *D, D', E, E'* part length
b', thereafter $C_p = 0$.

Wind Angle θ	Pressure Coefficients, C_p							
	D	*D'*	*E*	*E'*	End Surfaces			
					C	*C'*	*G*	*G'*
0°	- 1.3	+ 0.8	- 0.6	+ 0.7				
45°	- 0.5	+ 0.4	- 0.3	+ 0.3				
90°	- 0.3	0	- 0.3	0	- 0.4	+ 0.8	+ 0.3	- 0.6
180°	- 0.4	- 0.3	- 0.6	- 0.3				
For all value of θ	For *f* : C_p Top = -1.6, C_p bottom = - 0.9 Tangentially acting friction : $R_{90°} = 0.1 p_d bd$							

Table 17 Pressure Coefficients for Troughed Free Roofs, $\alpha = 10°$

(*Clause* 4.5.3.3.3)

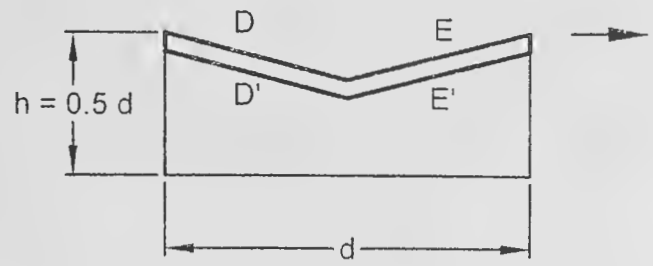

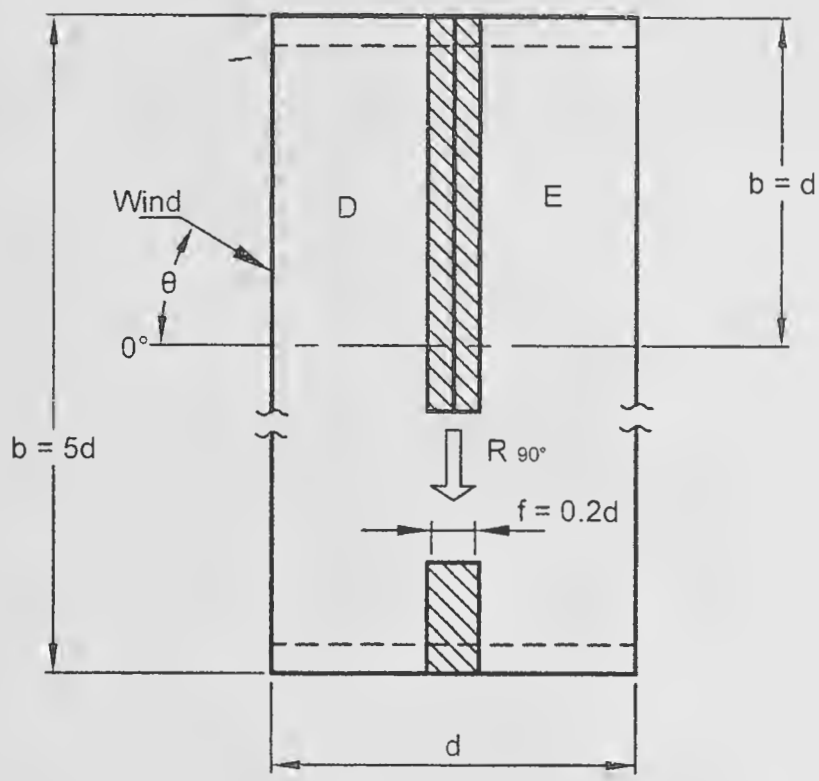

Roof slope $\alpha = 10°$

$\theta = 0°$- 45°, *D, D', E, E'* full length.

$\theta = 90°$, *D, D', E, E'* part length *b'*, thereafter $C_p = 0$.

Wind Angle θ	Pressure Coefficients, C_p			
	D	*D'*	*E*	*E'*
0°	+ 0.3	- 0.7	+ 0.2	- 0.9
45°	0	- 0.2	+ 0.1	- 0.3
90°	- 0.1	+ 0.1	- 0.1	+ 0.1
For all value of θ	For *f* : C_pTop = 0.4, $C_p$bottom = - 1.5 Tangentially acting friction : $R_{90°} = 0.1 p_d bd$			

Table 18 Pressure Coefficients (Top and Bottom) for Troughed Free Roofs $\alpha = 10°$ with Effects of Train or Stored Materials

(*Clause* 4.5.3.3.3)

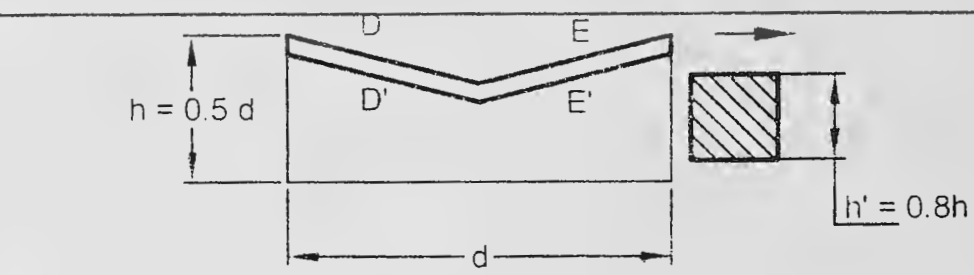

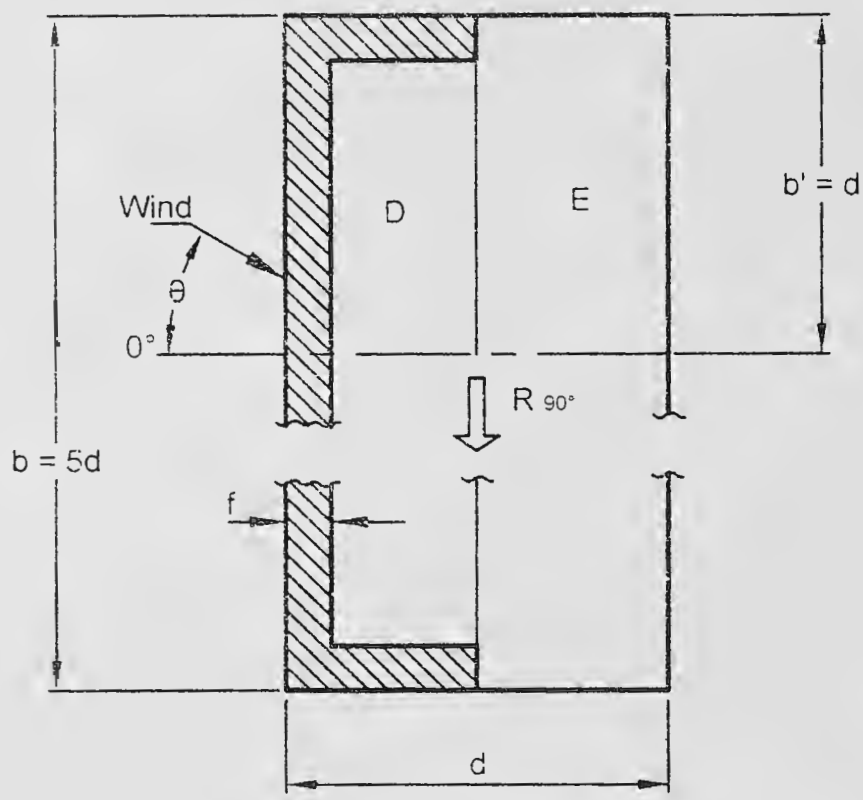

Roof slope $\alpha = 10°$

Effects of trains or stored materials.

$\theta = 0° - 45°$, or $135° - 180°$, *D, D', E, E'* full length.

$\theta = 90°$, *D, D', E, E'* part length *b'*, thereafter $C_p = 0$.

Wind Angle θ	Pressure Coefficients. C_p			
	D	*D'*	*E*	*E'*
0°	- 0.7	+ 0.8	- 0.6	+ 0.6
45°	- 0.4	+ 0.3	- 0.2	+ 0.2
90°	- 0.1	+ 0.1	- 0.1	+ 0.1
180°	- 0.4	- 0.2	- 0.6	- 0.3
For all value of θ	For *f* : C_pTop = -1.1, $C_p$bottom = 0.9 Tangentially acting friction : $R_{90°} = 0.1 p_d bd$			

Table 19 External Pressure Coefficients (C_{pe}) for Pitched Roofs of Multispan Buildings (All Spans Equal) with $h < w'$

(*Clause* 4.5.3.3.4)

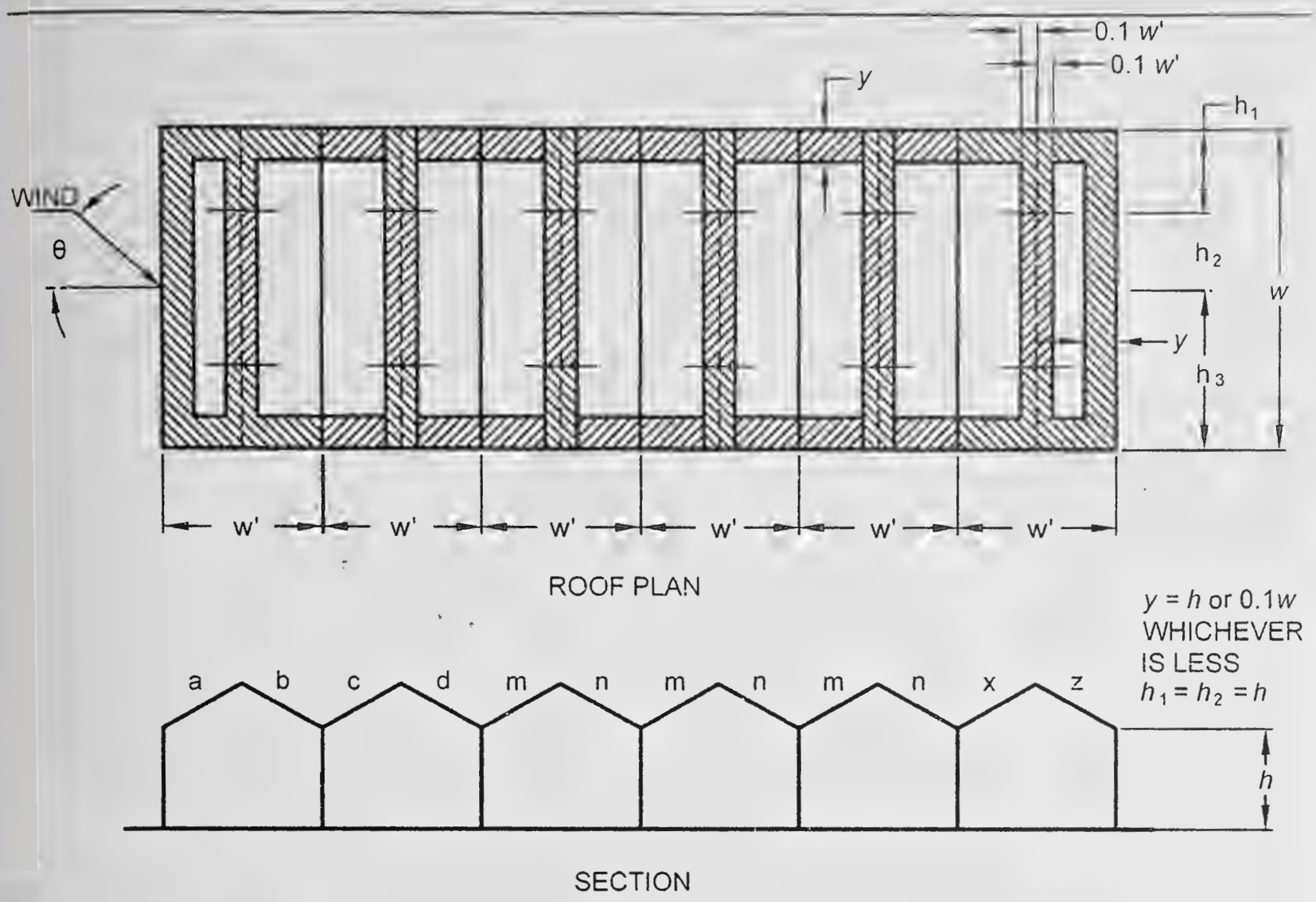

Roof Angle	Wind Angle	First Span		First Intermediate Span		Other Intermediate Spans		End Span		Local Coefficient	
α Degree	θ Degree	a	b	c	d	m	n	x	z	▨	▨
5	0	- 0.9	- 0.6	- 0.4	- 0.3	- 0.3	- 0.3	- 0.3	- 0.3		
10		- 1.1	- 0.6	- 0.4	- 0.3	- 0.3	- 0.3	- 0.3	- 0.4		
20		- 0.7	- 0.6	- 0.4	- 0.3	- 0.3	- 0.3	- 0.3	- 0.5	- 2.0	- 1.5
30		- 0.2	- 0.6	- 0.4	- 0.3	- 0.2	- 0.3	- 0.2	- 0.5		
45		+ 0.3	- 0.6	- 0.6	- 0.4	- 0.2	- 0.4	- 0.2	- 0.5		
DISTANCE											
Roof Angle α Degrees		Wind Angle θ Degrees		h_1		h_2		h_3			
up to 45		90		- 0.8		- 0.6		- 0.2			

Frictional drag : When wind angle θ = 0°, horizontal forces due to frictional drag are allowed for in the above values, and

When wind angle θ = 90°, allow for frictional drag in accordance with **4.5.4.1.**

NOTE — Evidence on these buildings is fragmentary and any departure from the cases given should be investigated separately.

Table 20 External Pressure Coefficients (C_{pe}) for Saw Tooth Roofs of Multispan Buildings (All Spans Equal) with $h < w'$

(*Clause* 4.5.3.3.4)

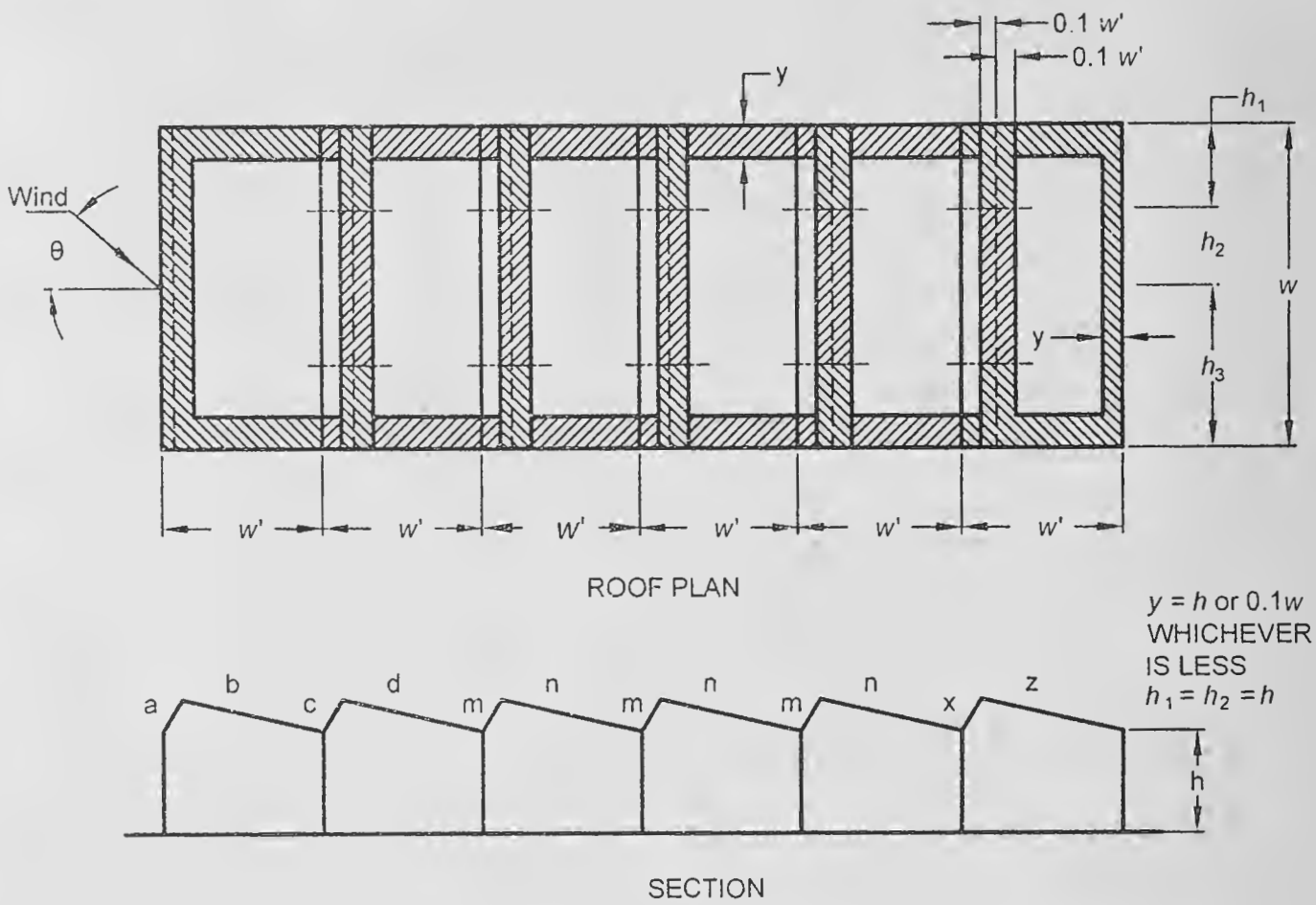

Wind Angle	First Span		First Intermediate Span		Other Intermediate Spans		End Span		Local Coefficient	
θ Degree	a	b	c	d	m	n	x	z		
0	+ 0.6	- 0.7	- 0.7	- 0.4	- 0.3	- 0.2	- 0.1	- 0.3		
180	- 0.5	- 0.3	- 0.3	- 0.3	- 0.4	- 0.6	- 0.6	- 0.1	- 2.0	- 1.5

DISTANCE			
Wind Angle θ Degree	h_1	h_2	h_3
90	- 0.8	- 0.6	- 0.2
270	Similar to 90°, h_1, h_2, h_3, are needed to be reckoned from the windward edge in the same order		

Frictional drag : When wing angle θ = 0°, horizontal forces due to frictional drag are allowed for in the above values, and

When wind angle θ = 90° , allow for frictional drag in accordance with **4.5.4.1.**

NOTE — Evidence on these buildings is fragmentary and any departure from the cases given should be investigated separately.

Table 21 External Pressure Coefficients (C_{pe}) for Curved Roofs

(*Clause* 4.5.3.3.6)

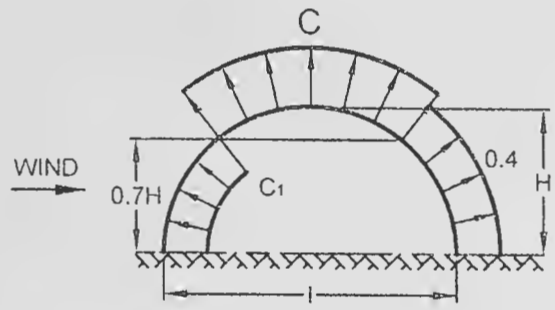

a) ROOF SPRINGING FROM GROUND LEVEL

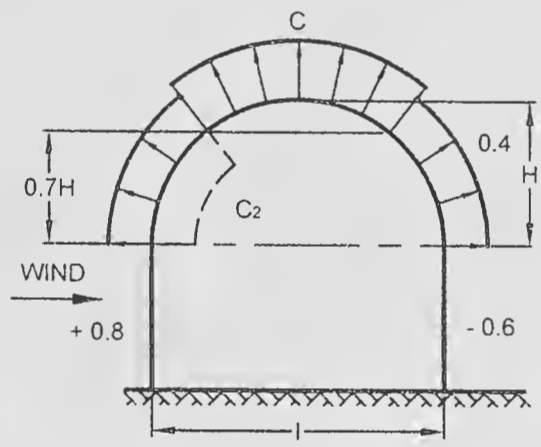

b) ROOF ON ELEVATED STRUCTURE

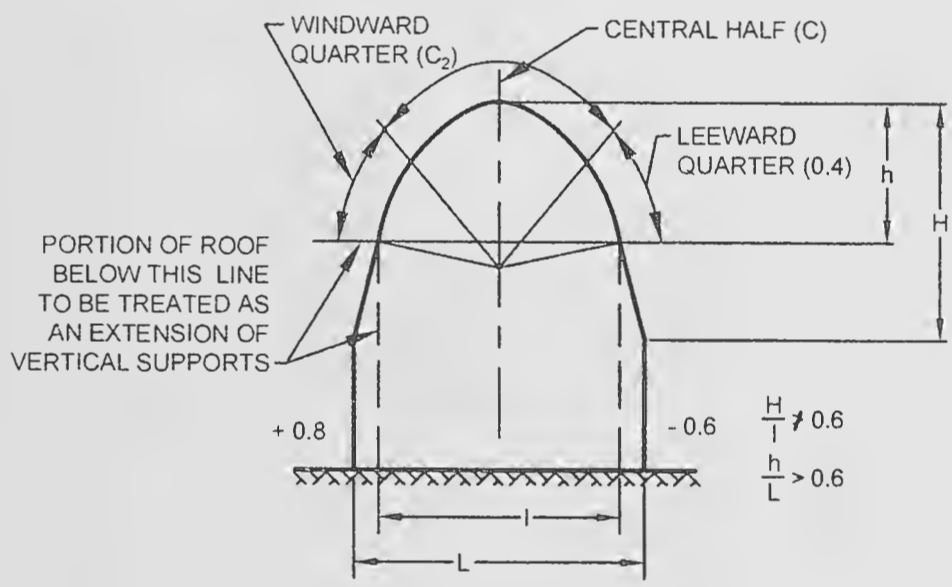

c) DOUBLE CURVED ROOFS

VALUES OF C, C_1 and C_2

H/l	C	C_1	C_2	C_2
0.1	- 0.8	+ 0.1	- 0.8	- 0.05
0.2	- 0.9	+ 0.3	- 0.7	+ 0.1
0.3	- 1.0	+ 0.4	- 0.3	+ 0.15
0.4	- 1.1	+ 0.6	+ 0.4	-
0.5	- 1.2	+ 0.7	+ 0.7	-

NOTE — When the wind is blowing normal to gable ends, C pe may be taken as equal to-0.7 for the full width of the roof over a length of//2 from the gable ends and - 0.5 for the remaining portion.

Table 22 External Pressure Coefficients (C_{pe}) around Cylindrical Structures
(*Clause* 4.5.3.3.7)

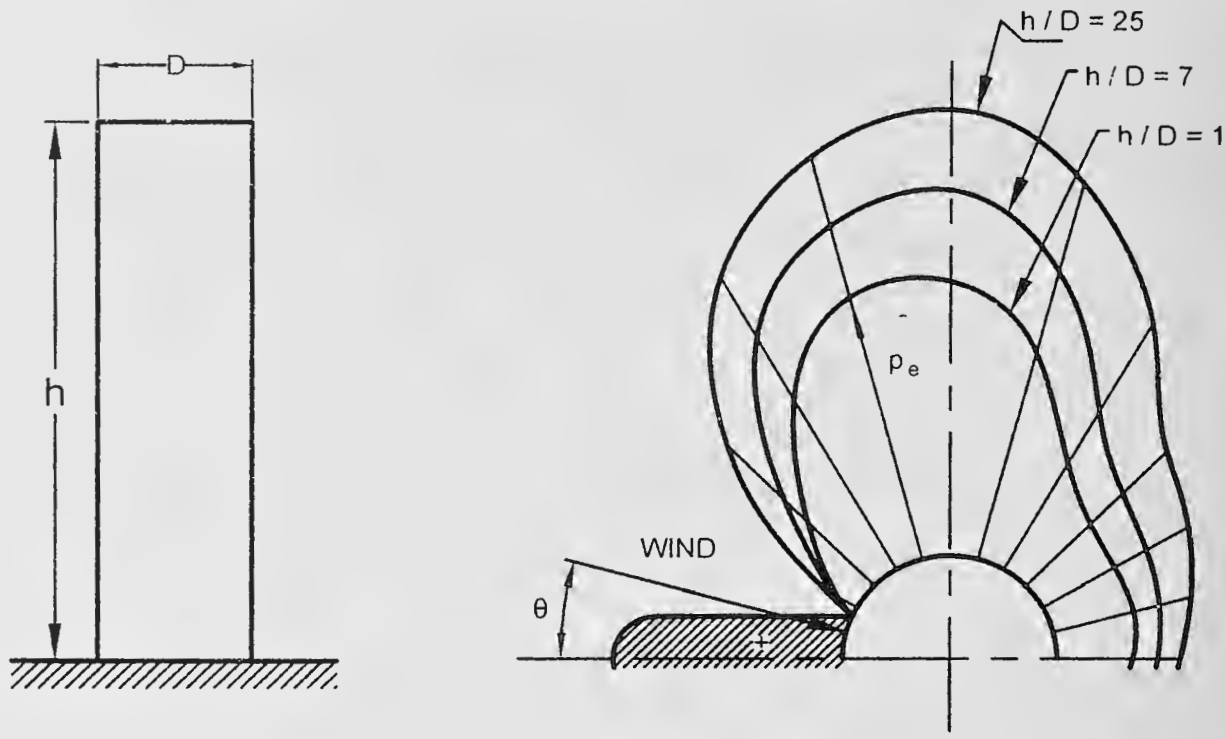

Position of Periphery, θ DEGREE	Pressure Coefficients (C_{pe})		
	h / D = 25	*h / D* = 7	*h / D* = 1
0	1.0	1.0	1.0
15	0.8	0.8	0.8
30	0.1	0.1	0.1
45	- 0.9	- 0.8	- 0.7
60	- 1.9	- 1.7	- 1.2
75	- 2.5	- 2.2	- 1.6
90	- 2.6	- 2.2	- 1.7
105	- 1.9	- 1.7	- 1.2
120	- 0.9	- 0.8	- 0.7
135	- 0.7	- 0.6	- 0.5
150	- 0.6	- 0.5	- 0.4
165	- 0.6	- 0.5	- 0.4
180	- 0.6	- 0.5	- 0.4

Table 23 External Pressure Coefficients (C_{pe}) for Roofs and Bottoms of Cylindrical Structures
(*Clause* 4.5.3.3.8)

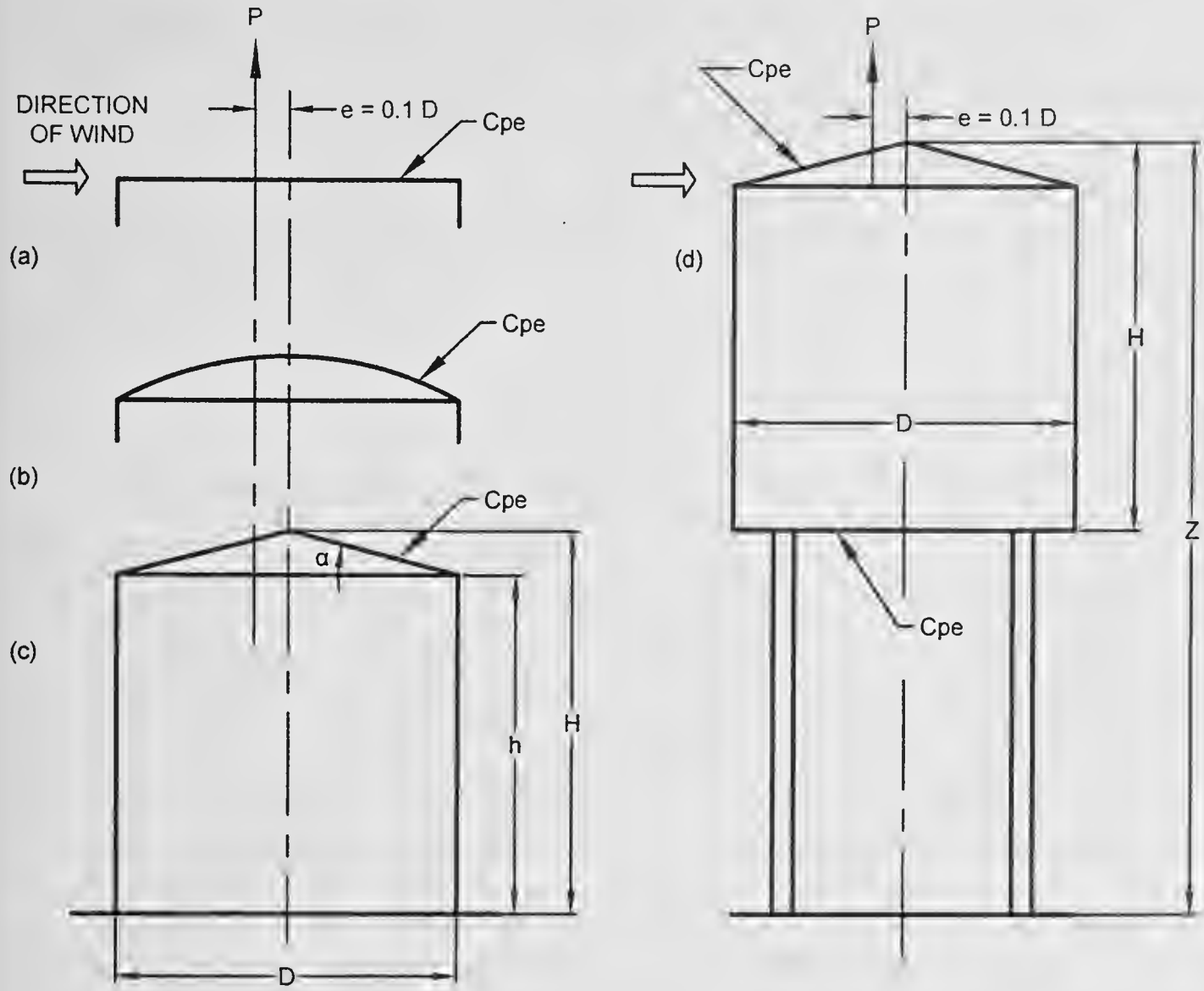

Coefficients of External Pressure (C_{pe})				
Structure According to Shape				
a, b and c		d		
H / D	Roof	(z / H) - 1	Roof	Bottom
0.5	- 0.65	1.00	- 0.75	- 0.8
1.00	- 1.00	1.25	- 0.75	- 0.7
2.00	- 1.00	1.50	- 0.75	- 0.6

Total force acting on the roof of the structure, $P = 0.785\ D^2\ (C_{pi} - C_{pe})\ p_d$
The resultant of P lies eccentrically, e = 0.1D

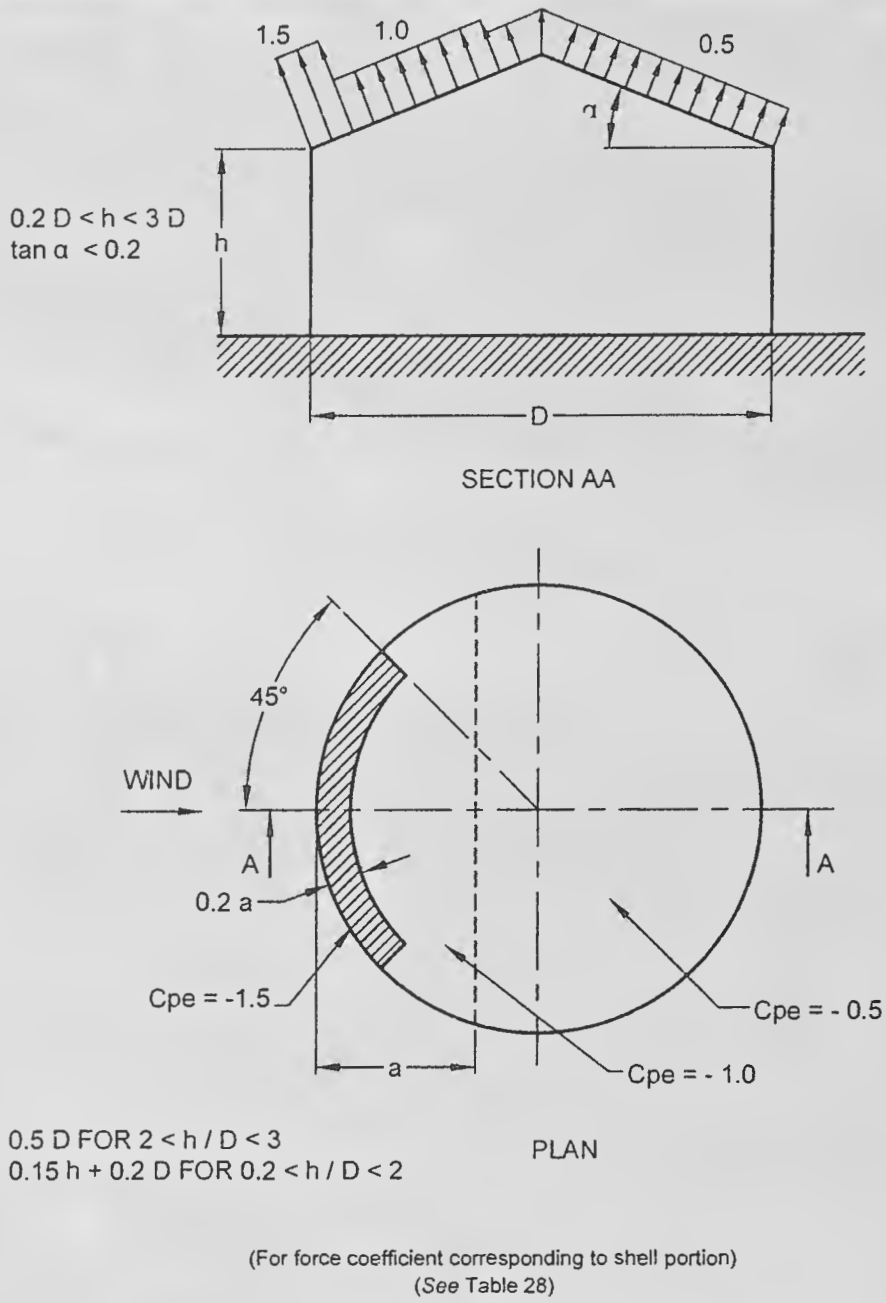

FIG. 3 EXTERNAL PRESSURE COEFFICIENTS ON THE UPPER ROOF SURFACE OF CYLINDRICAL STRUCTURES STANDING ON THE GROUND

4.5.3.3.10 *Roofs with skylight*

The average external pressure coefficients for roofs with skylight are shown in Table 25.

4.5.3.3.11 *Grandstands*

The pressure coefficients on the roof (top and bottom) and rear wall of a typical grandstand roof which is open on three sides are given in Table 26. The pressure coefficients are valid for a particular ratio of dimensions as specified in Table 24 but may be used for deviations up to 20 percent. In general, the maximum wind load occurs when the wind is blowing into the open front of the stand, causing positive pressure under the roof and negative pressure on the roof.

4.5.3.3.12 *Spheres*

The external pressure coefficients for spheres shall be as given in Table 27.

4.5.3.3.13 *Frames*

When taking wind loads on frames of clad buildings it is reasonable to assume that the pressures or suctions inside and outside the structure shall not be fully correlated. Therefore when taking the combined effect of wind loads on the frame, a reduction factor of $K_c = 0.90$ may be used over the building envelope when roof is subjected to pressure and internal pressure is suction, or *vice-versa.*

4.5.4 *Force Coefficients*

The value of force coefficients (C_f) apply to a building or structure as a whole, and when multiplied by the effective frontal area (A_e) of the building or structure and design wind pressure, p_d gives the total wind load (F) on that particular building or structure, expressed as:

$$F = C_f A_e p_d$$

where F is the force acting in a direction specified in the respective tables and C_f is the force coefficient for the building.

NOTES

1 The value of the force coefficient differs for the wind acting

Table 24 External Pressure Coefficients (C_{pe}) for Combined Roofs
(*Clause* 4.5.3.3.9)

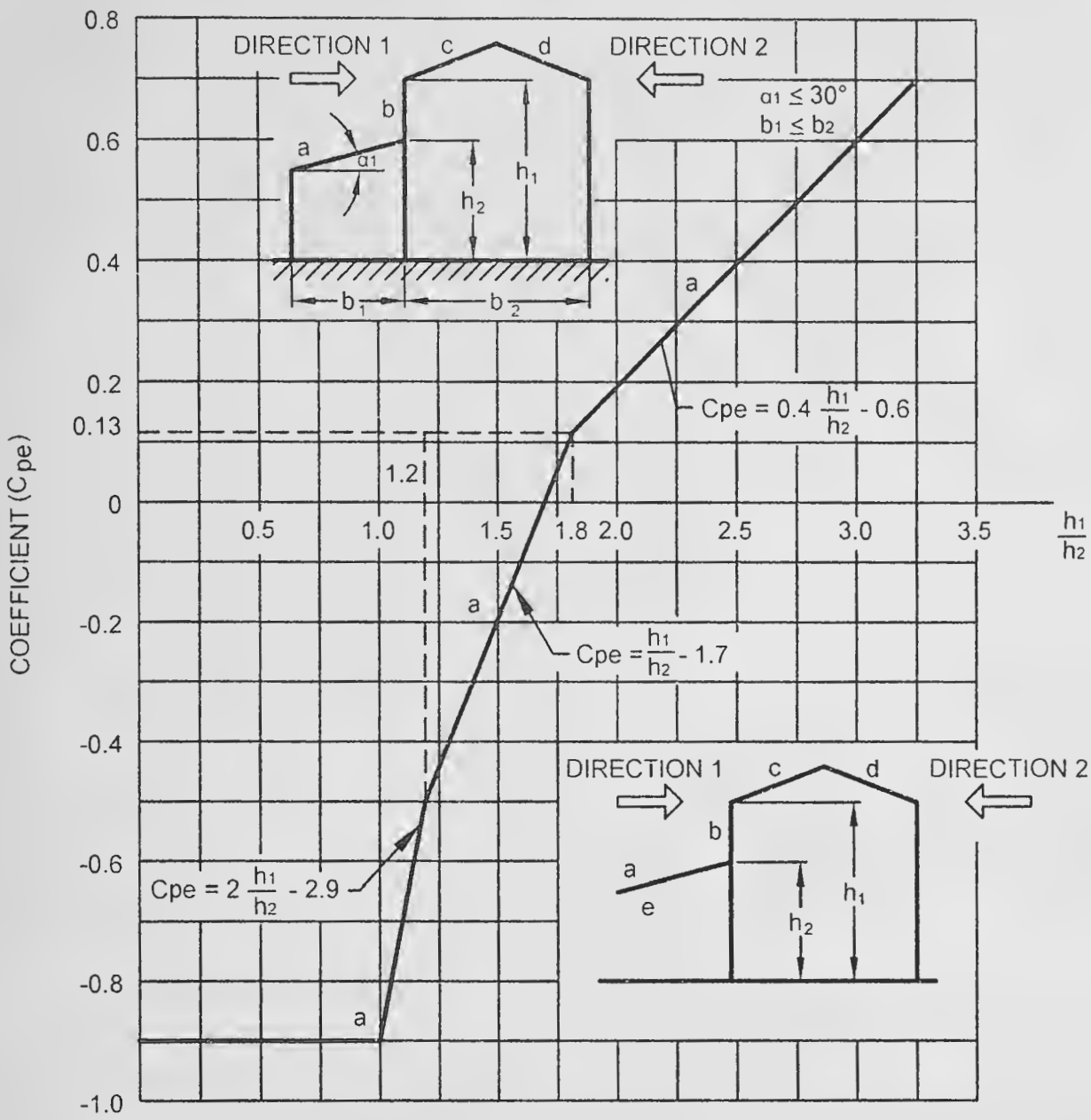

Values of Coefficients (C_{pe})		
Portion	Direction 1	Direction 2
a	From the Diagram	- 0.4
b	$C_{pe} = -0.5, \frac{h_1}{h_2} \leq 1.5$ $C_{pe} = +0.7; \frac{h_1}{h_2} > 1.5$	
c and d	*See* Table 9	
e	*See* **4.5.3.3**	

Table 25 External Pressure Coefficients (C_{pe}) for Roofs with a Sky Light

(*Clause* 4.5.3.3.10)

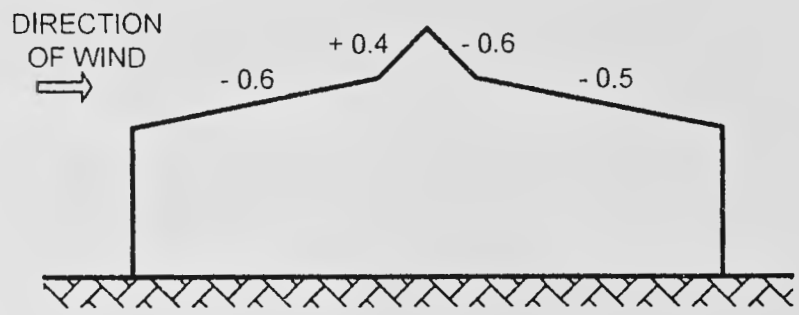

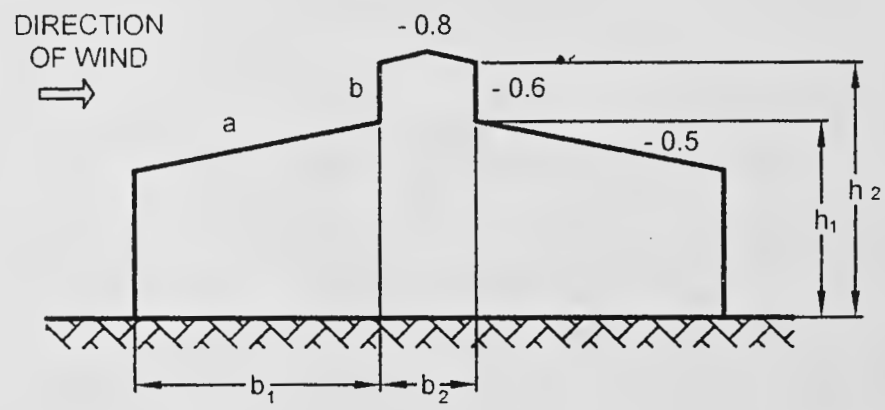

b) ROOFS WITH A SKY LIGHT

Values of Coefficients (C_{pe})			
Portion	$b_1 > b_2$		$b_1 \leq b_2$
	a	*b*	*a* and *b*
C_{pe}	- 0.6	+ 0.7	*See* Table 24 for combined roofs

Table 26 Pressure Coefficients at Top and Bottom Roof of Grand Stands Open Three Sides (Roof Angle up to 5°)

(*Clause* 4.5.3.3.11)

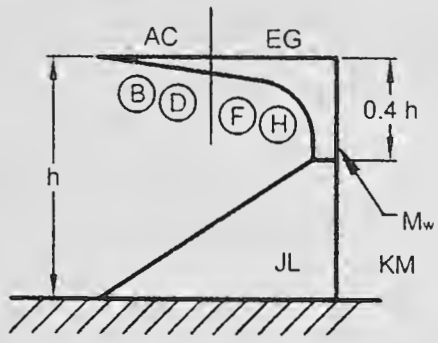

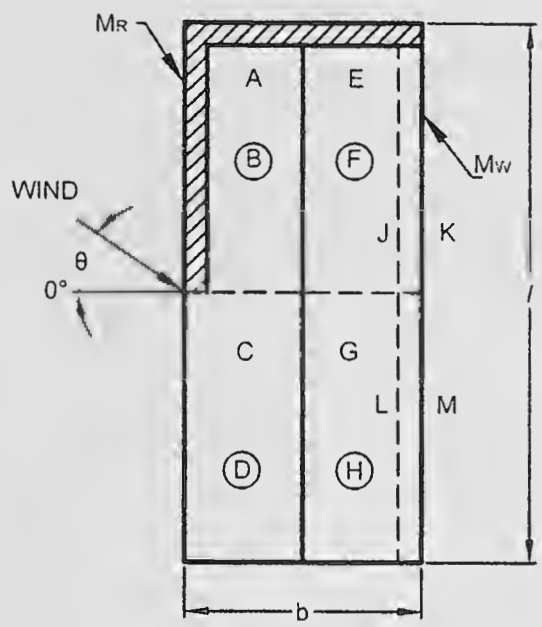

(Shaded area to scale)

Front and Back of Wall				
θ	*J*	*K*	*L*	*M*
0°	+ 0.9	- 0.5	+ 0.9	- 0.5
45°	+ 0.8	- 0.6	+ 0.4	- 0.4
135°	- 1.1	+ 0.6	- 1.0	+ 0.4
180°	- 0.3	+ 0.9	- 0.3	+ 0.9
60°	M_w - Cp of K = - 1.0			
60°	M_w - Cp of J = + 1.0			

Top and Bottom Roof								
θ	*A*	*B*	*C*	*D*	*E*	*F*	*G*	*H*
0°	- 1.0	+ 0.9	- 1.0	+ 0.9	- 0.7	+ 0.9	+ 0.7	+ 0.9
45°	- 1.0	+ 0.7	- 0.7	+ 0.4	- 0.5	+ 0.8	- 0.5	+ 0.3
135°	- 0.4	- 1.1	- 0.7	- 1.0	- 0.9	- 1.1	- 0.9	- 1.0
180°	- 0.6	- 0.3	- 0.6	- 0.3	- 0.6	- 0.3	- 0.6	- 0.3
45°	'M_R' - Cp (top) = - 2.0							
45°	'M_R' - Cp (bottom) = + 1.0							

Table 27 External Pressure Coefficients (C_{pe}) Around Spherical Structures
(*Clause* 4.5.3.3.12)

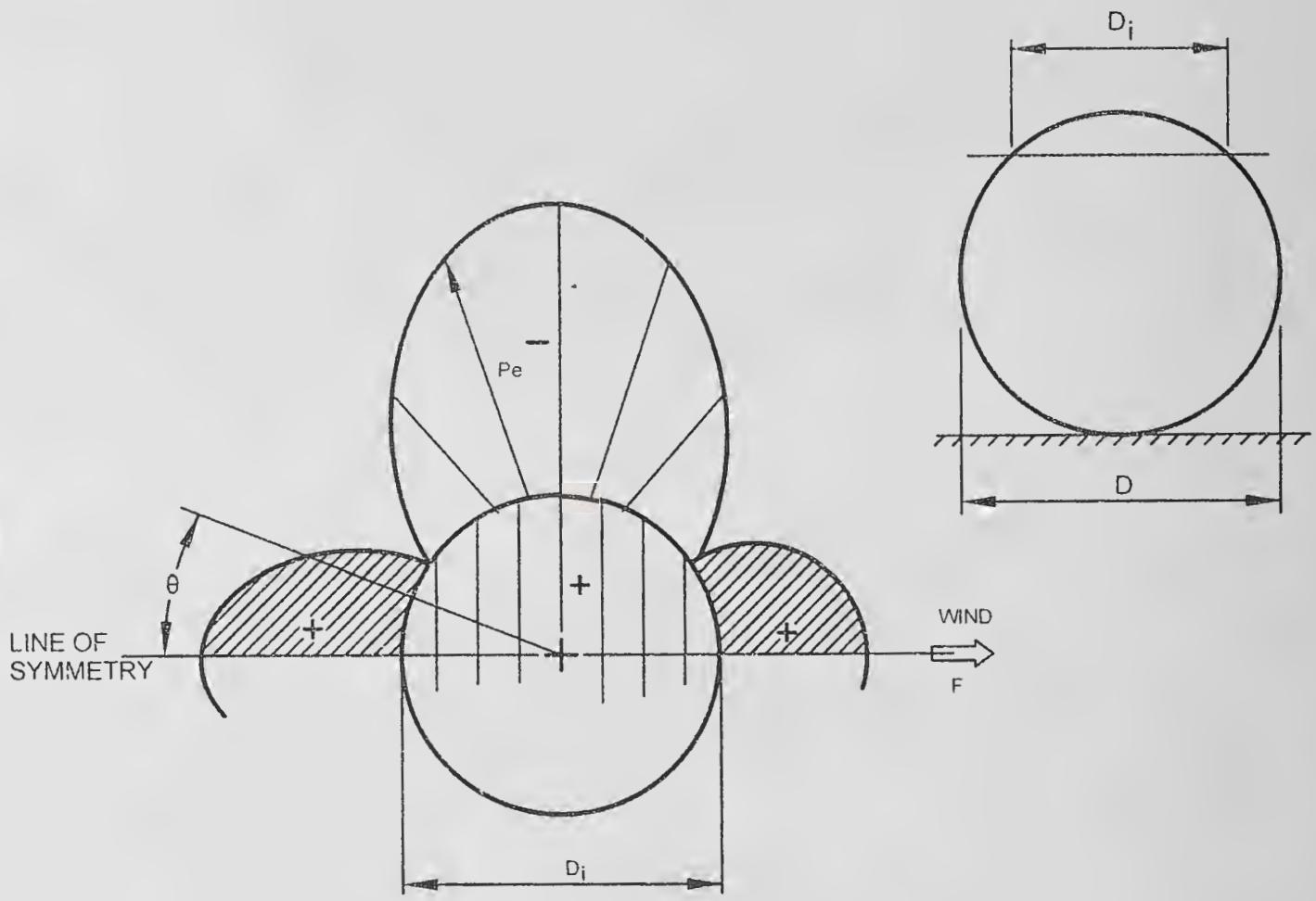

Position of Periphery, θ Degree	C_{pe}
0	+ 1.0
15	+ 0.9
30	+ 0.5
45	- 0.1
60	- 0.7
75	- 1.1
90	- 1.2
105	- 1.0
120	- 0.6
135	- 0.2
150	+ 0.1
165	+ 0.3
180	+ 0.4

on different faces of a building or structure. In order to determine the critical load, the total wind load should be calculated for each wind direction.

2 If surface design pressure varies with height, the surface area of the building/structure may be sub-divided so that specified pressures are taken over appropriate areas.

3 In tapered buildings/structures, the force coefficients shall be applied after sub-dividing the building/structure into suitable number of strips and the load on each strip calculated individually, taking the area of each strip as A_e.

4 For force coefficients for structures not covered herein, reference may be made to specialist literature on the subject or advice may be sought from specialist in the subject.

4.5.4.1 *Frictional drag*

In certain buildings of special shape, a force due to frictional drag shall be taken into account in addition to those loads specified in **4.5.3**. For rectangular clad buildings, this addition is necessary only where the ratio *d/h* or *d/b* is more than 4. The frictional drag force, F_f, in the direction of the wind is given by the following

formulae:

If $h \leq b$, $F' = C_f'(d-4h)\,b\,p_d + C'_f(d-4h)\,2h\,p_d$, and

If $h > b$, $F' = C_f'(d-4b)\,b\,p_d + C'_f(d-4b)\,2h\,p_d$

The first term in each case gives the drag on the roof and the second on the walls. The C_f' has the following values:

a) 0.01 for smooth surfaces without corrugations or ribs across the wind direction,

b) 0.02 for surfaces with corrugations across the wind direction, and

c) 0.04 for surfaces with ribs across the wind direction.

For other buildings, the frictional drag has been indicated, where necessary, in the tables of pressure coefficients and force coefficients.

4.5.4.2 *Force coefficients for clad buildings*

4.5.4.2.1 *Clad buildings of uniform section*

The overall force coefficients for rectangular clad buildings of uniform section with flat roofs in uniform flow shall be as given in Fig. 4 and for other clad buildings of uniform section (without projections, except where otherwise shown) shall be as given in Table 28.

NOTE — Structures that are in the supercritical flow regime, because of their size and design wind velocity, may need further calculation to ensure that the greatest loads do not occur at some wind speed below the maximum, when the flow will be sub-critical.

The coefficients are for buildings without projections, except where otherwise shown.

In Table 28, $\overline{V}_d b$ is used as an indication of the airflow regime.

4.5.4.2.2 *Buildings of circular shapes*

Force coefficients for buildings of circular cross-section shapes shall be as given in Table 28. However, more precise estimation of force coefficients for circular shapes of infinite length can be obtained from Fig. 5 taking into account the average height of surface roughness ε. When the length is finite the values obtained from Fig. 5 shall be reduced by the multiplication factor K (*see also* Table 31 and Annex F).

4.5.4.2.3 *Free standing walls and hoardings*

Force coefficients for free standing walls and hoardings shall be as given in Table 29.

To allow for oblique winds, the design shall also be checked for net pressure normal to the surface varying linearly from a maximum of 1.7 C_f at the windward edge to 0.44 C_f at the leeward edge.

The wind load on appurtenances and supports for hoardings shall be accounted for separately by using the appropriate net pressure coefficients. Allowance shall be made for shielding effects of one element on another.

4.5.4.2.4 *Solid circular shapes mounted on a surface*

The force coefficients for solid circular shapes mounted on a surface shall be as given in Table 30.

4.5.4.3 *Force coefficients for unclad buildings*

4.5.4.3.1 This Section applies to permanently unclad buildings and to frameworks of buildings while temporarily unclad. In the case of buildings whose surfaces are well-rounded, such as those with elliptic, circular or oval cross-sections, the total force can be more at a wind speed much less than maximum due to transition in the nature of boundary layer on them. Although this phenomenon is well known in the case of circular cylinders, the same phenomenon exists in the case of many other well-rounded structures, and this possibility shall be checked.

4.5.4.3.2 *Individual members*

a) The force coefficient given in Table 32 refers to members of infinite length. For members of finite length, the coefficients should be multiplied by a factor K that depends on the ratio l/b where l is the length of the member and b is the width across the direction of wind. Table 31 gives the required values of K. The following special cases shall be noted while estimating K:

   1) When any member abuts on to a plate or wall in such a way that free flow of air around that end of the member is prevented, then the ratio of l/b shall be doubled for the purpose of determining K; and

   2) When both ends of a member are so obstructed, the ratio shall be taken as infinity for the purpose of determining K.

b) *Flat-sided members* — Force coefficients for wind normal to the longitudinal axis of flat-sided structural members shall be as given in Table 32.

   The force coefficients are given for two mutually perpendicular directions relative to a reference axis on the structural member. They are denoted by C_{fn} and C_{ft} and give the forces normal and transverse, respectively to the reference plane as shown in Table 32.

   Normal force, $F_n = (C_{fn}\,p_d\,K)/b$

   Transverse force, $F_t = (C_{ft}\,p_d\,K)/b$

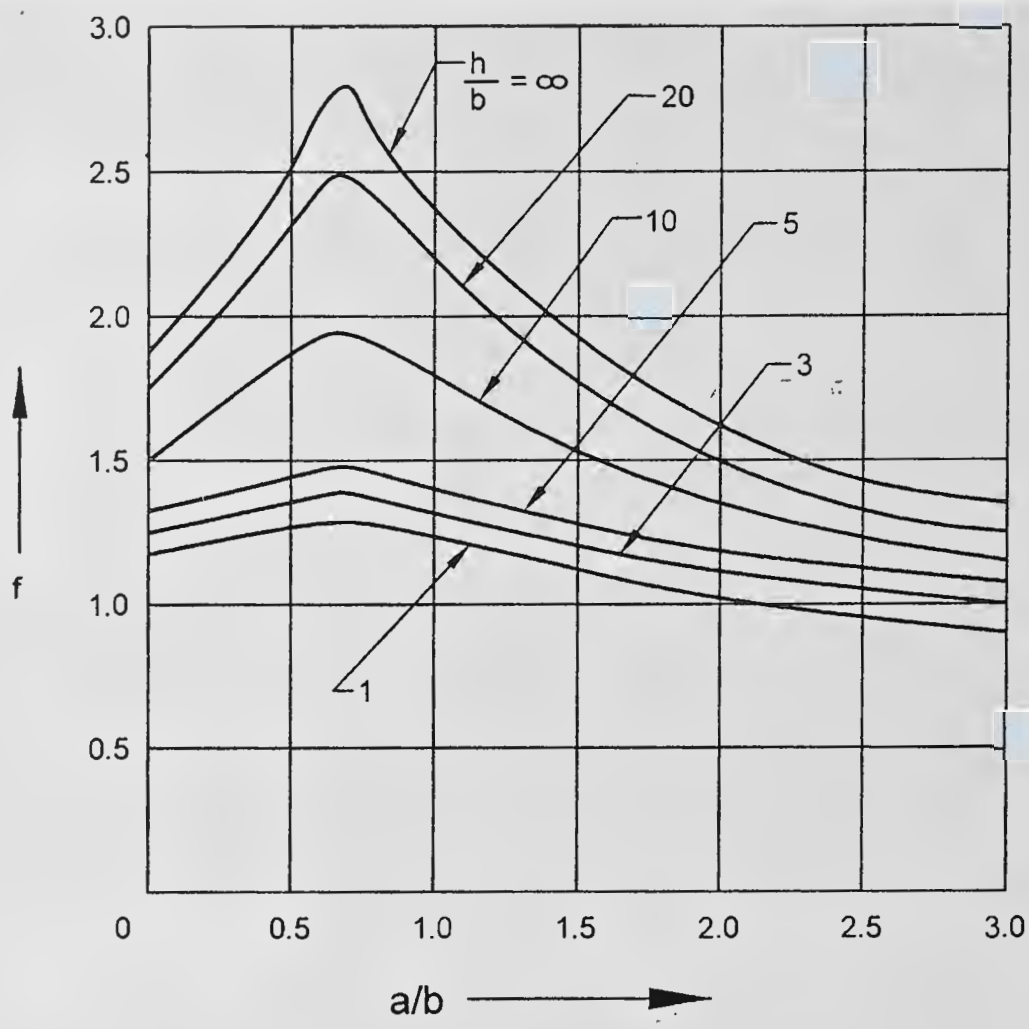

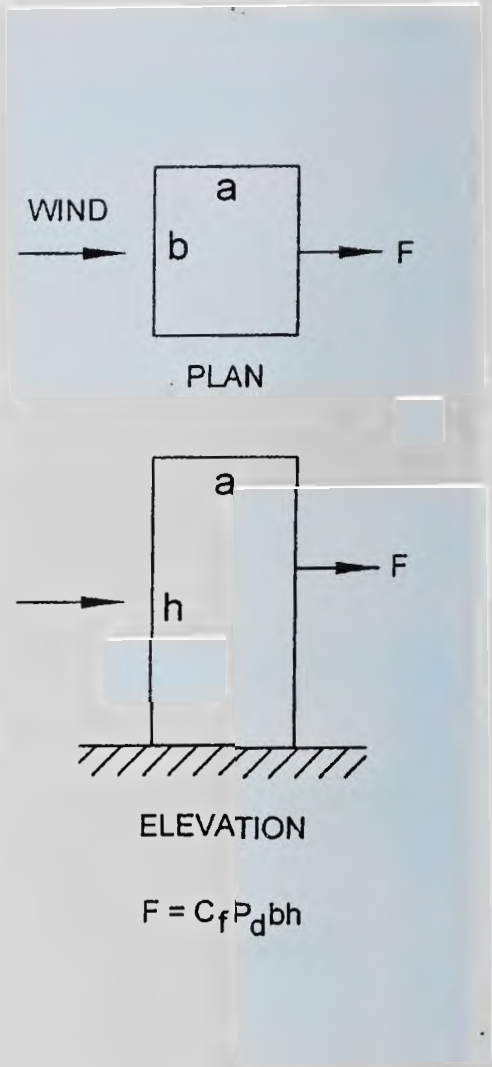

4A VALUES OF C_f *Versus a / b* for *h / b* ≥ 1

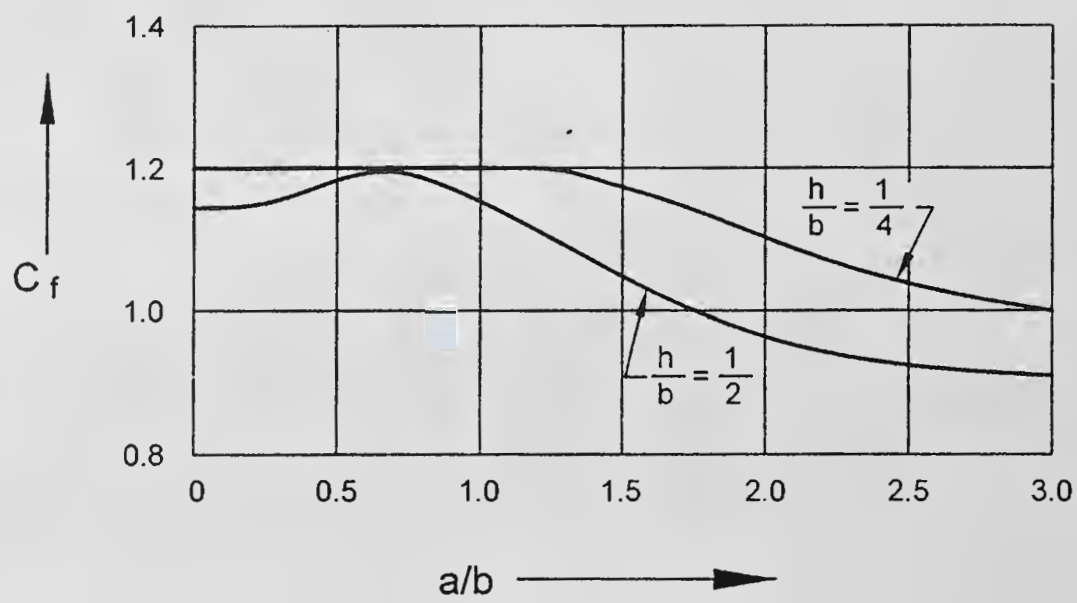

4B VALUES OF C_f *Versus a / b* for *h / b* < 1

FIG. 4 FORCE COEFFICIENT FOR RECTANGULAR CLAD BUILDING IN UNIFORM FLOW

c) *Circular sections* — Force coefficients for members of circular section shall be as given in Table 28 (*see also* Annex F).

d) Force coefficients for wires and cables shall be as given in Table 33 according to the diameter (D), the design wind speed (V_d) and the surface roughness.

4.5.4.3.3 *Single frames*

Force coefficients for a single frame having either,

a) all flat sided members; or

b) all circular members in which all the members of the frame have either,

Table 28 Force Coefficients, C_f for Clad Buildings of Uniform Section (Acting in the Direction of Wind)

(*Clause* 4.5.4.2.1)

Plan Shape	$\overline{V}_d$ b m²/s	C_f for Height / Breadth Ratio						
		Up to 1/2	1	2	5	10	20	∞
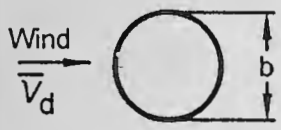 *See also* Annex D	All Surfaces < 6	0.7	0.7	0.7	0.8	0.9	1.0	1.2
	Rough or with Projection ≥ 6							
	Smooth ≥ 6	0.5	0.5	0.5	0.5	0.5	0.6	0.6
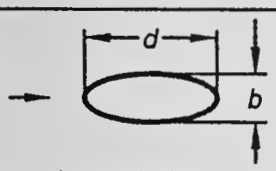 Ellipse *b/d* = 1/2	< 10	0.5	0.5	0.5	0.5	0.6	0.6	0.7
	≥ 10	0.2	0.2	0.2	0.2	0.2	0.2	0.2
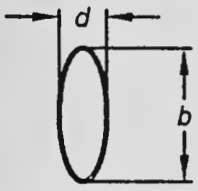 Ellipse *b/d* = 2	< 8	0.8	0.8	0.9	1.0	1.1	1.3	1.7
	≥ 8	0.8	0.8	0.9	1.0	1.1	1.3	1.5
b/d = 1 *r/b* = 1/3	< 4	0.6	0.6	0.6	0.7	0.8	0.8	1.0
	≥ 4	0.4	0.4	0.4	0.4	0.5	0.5	0.5
b/d = 1 *r/b* = 1/6	< 10	0.7	0.8	0.8	0.9	1.0	1.0	1.3
	≥ 10	0.5	0.5	0.5	0.5	0.6	0.6	0.6
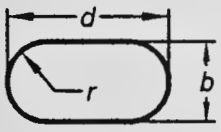 *b/d* = 1/2 *r/b* = 1/2	< 3	0.3	0.3	0.3	0.3	0.3	0.3	0.4
	≥ 3	0.2	0.2	0.2	0.2	0.3	0.3	0.3
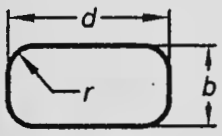 *b/d* = 1/2 *r/b* = 1/6	All values	0.5	0.5	0.5	0.5	0.6	0.6	0.7
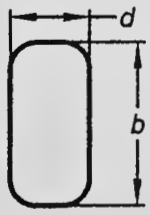 *b/d* = 2 *r/b* = 1/12	All values	0.9	0.9	1.0	1.1	1.2	1.5	1.9

Table 28 — (*Continued*)

Plan Shape	$\bar{V}_d b$ m^2/s	C_f for Height / Breadth Ratio						
		Up to 1/2	1	2	5	10	20	∞
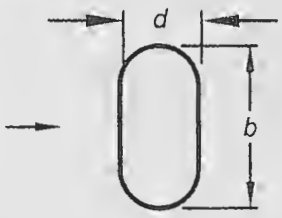 *b/d* = 2 *r/b* = 1/4	< 6	0.7	0.8	0.8	0.9	1.0	1.2	1.6
	≥ 6	0.5	0.5	0.5	0.5	0.5	0.6	0.6
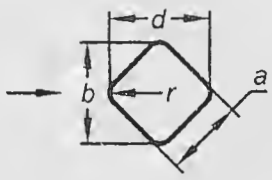 *r/a* = 1/3	< 10	0.8	0.8	0.9	1.0	1.1	1.3	1.5
	≥ 10	0.5	0.5	0.5	0.5	0.5	0.6	0.6
r/a = 1/12	All values	0.9	0.9	0.9	1.1	1.2	1.3	1.6
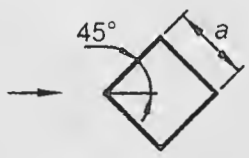 *r/a* = 1/48	All values	0.9	0.9	0.9	1.1	1.2	1.3	1.6
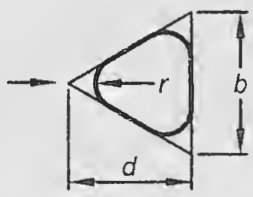 *r/b* = 1/4	< 11	0.7	0.7	0.7	0.8	0.9	1.0	1.2
	≥ 11	0.4	0.4	0.4	0.4	0.5	0.5	0.5
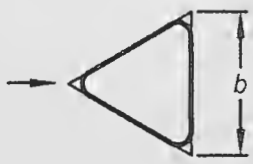 *r/b* = 1/12	All values	0.8	0.8	0.8	1.0	1.1	1.2	1.4
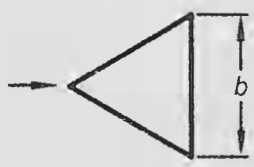 *r/b* = 1/48	All values	0.7	0.7	0.8	0.9	1.0	1.1	1.3
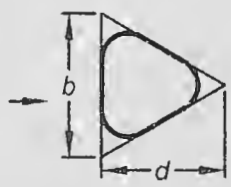 *r/b* = 1/4	< 8	0.7	0.7	0.8	0.9	1.0	1.1	1.3
	≥ 8	0.4	0.4	0.4	0.4	0.5	0.5	0.5

Table 28 — (*Concluded*)

Plan Shape	$\bar{V}_d$ b m^2/s	C_f for Height / Breadth Ratio						
		Up to 1/2	1	2	5	10	20	∞
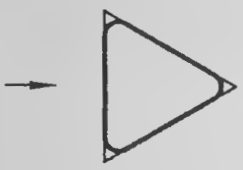 1/48 < r/b < 1/12	All values	1.2	1.2	1.2	1.4	1.6	1.7	2.1
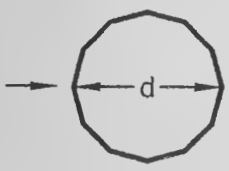 12 Sided Polygon	< 12	0.7	0.7	0.8	0.9	1.0	1.1	1.3
	≥ 12	0.7	0.7	0.7	0.7	0.8	0.9	1.1
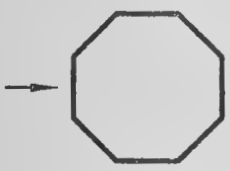 Octagon	All values	1.0	1.0	1.1	1.2	1.2	1.3	1.4
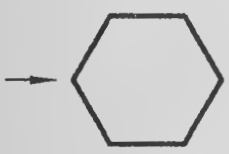 Hexagon	All values	1.0	1.1	1.2	1.3	1.4	1.4	1.5

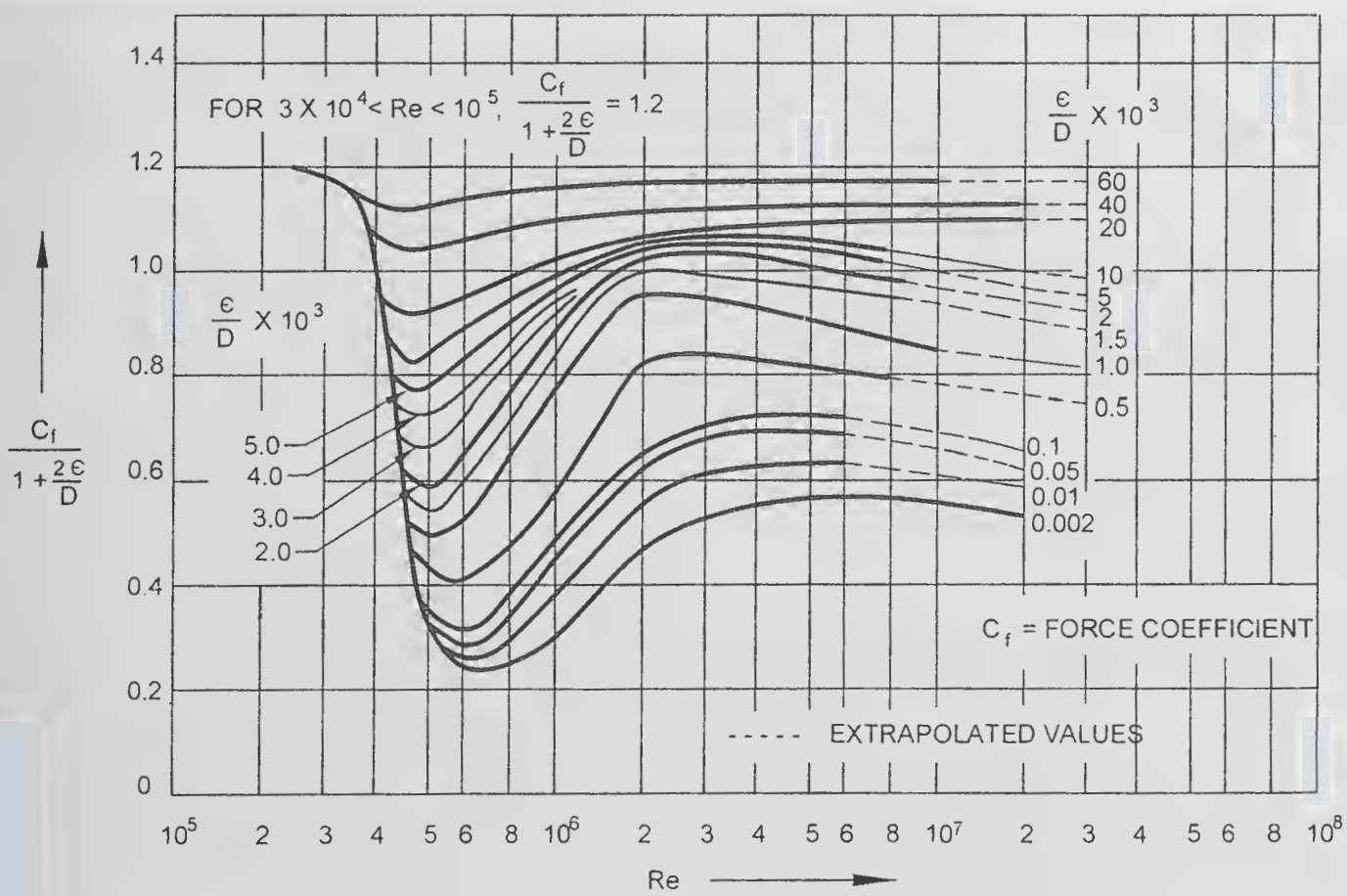

FIG. 5 VARIATION OF $\frac{C_f}{1+\frac{2\varepsilon}{D}}$ WITH $R_e > 3 \times 10^4$ FOR CIRCULAR SECTIONS

Table 29 Force Coefficients, C_f for Low Walls or Hoardings (< 15m High)
(*Clause* 4.5.4.2.3)

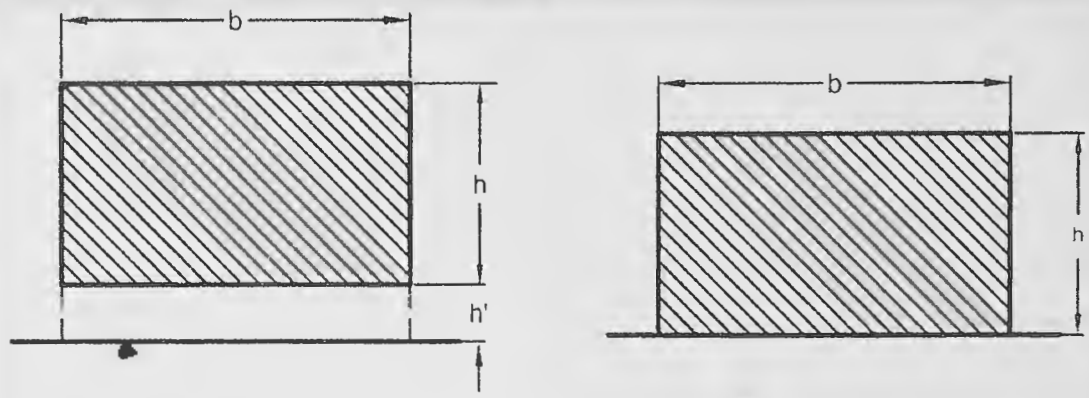

(WIND NORMAL TO FACE)

Width to Height Ratio, *b/h*		Force Coefficient C_f
Wall Above Ground	Wall on Ground	
From 0.5 TO 6	From 1 TO 12	1.2
10	20	1.3
16	32	1.4
20	40	1.5
40	80	1.75
60	120	1.8
80 or More	160 or More	2.0

1) $D\overline{V}_d$ less than 6 m²/s; or

2) $D\overline{V}_d$ more than or equal to 6 m²/s.

shall be as given in Table 31 according to the type of the member, the diameter (D), the design hourly mean wind speed ($D\overline{V}_d$) and the solidity ratio (Φ).

Force coefficients for a single frame not complying with the above requirements shall be calculated as follows:

$$C_f = \gamma\, C_{f\,super} + (1-\gamma)\frac{A_{circ\,sub}}{A_{sub}} C_{f\,sub} + (1-\gamma)\frac{A_{flat}}{A_{sub}} C_{f\,flat}$$

where

$C_{f\,super}$ = force coefficient for the supercritical circular members as given in Table 34 or Annex F,

$C_{f\,sub}$ = force coefficient for subcritical circular members as given in Table 34 or Annex F,

$C_{f\,flat}$ = force coefficient for the flat sided members as given in Table 34.

$A_{circ\,sub}$ = effective area of subcritical circular members,

A_{flat} = effective area of flat-sided members,

A_{sub} = $A_{circ\,sub} + A_{flat}$,

γ = (Area of the frame in a supercritical flow)/ A_e, and

A_e = Effective frontal area.

4.5.4.3.4 *Multiple frame buildings*

This Section applies to structures having two or more parallel frames where the windward frames may have a shielding effect upon the frames to leeward side. The windward frame and any unshielded parts of other frames shall be calculated in accordance with **4.5.4.3.3**, but the wind load on the parts of frames that are sheltered should be multiplied by a shielding factor which is dependent upon the solidity ratio of the windward frame, the types of members comprising the frame and the spacing ratio of the frames. The values of the shielding factors are given in Table 35.

Where there are more than two frames of similar geometry and spacing, the wind load on the third and subsequent frames should be taken as equal to that on

Table 30 Force Coefficients, C_f for Solid Shapes Mounted on a Surface
(*Clause* 4.5.4.2.4)

Side Elevation	Description of Shape	C_f
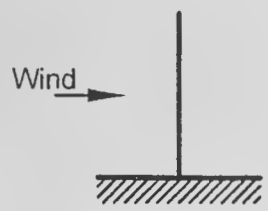	Circular disc	1.2
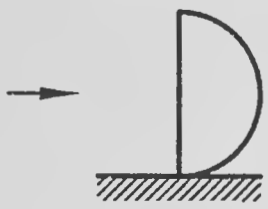	Hemispherical bowl	1.4
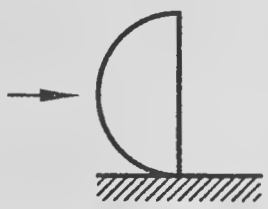	Hemispherical bowl	0.4
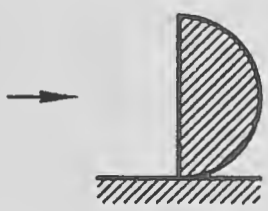	Hemispherical solid	1.2
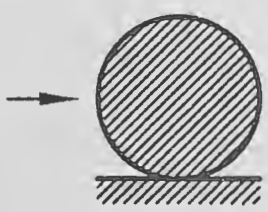	Spherical solid	0.5 FOR V_Z D < 7 0.2 FOR V_Z D ≥ 7

the second frame. The loads on the various frames shall be added to obtain total load on the structure.

a) The frame spacing ratio is equal to the centre-to-centre distance between the frames, beams or girders divided by the least overall dimension of the frames, beam or girder measured in a direction normal to the direction of wind. For triangular framed structures or rectangular framed structures diagonal to the wind, the spacing ratio should be calculated from the mean distance between the frames in the direction of the wind.

b) Effective solidity ratio, Φe:

   Φe = Φ for flat-sided members.

   Φe is to be obtained from Fig. 6 for members of circular cross-sections.

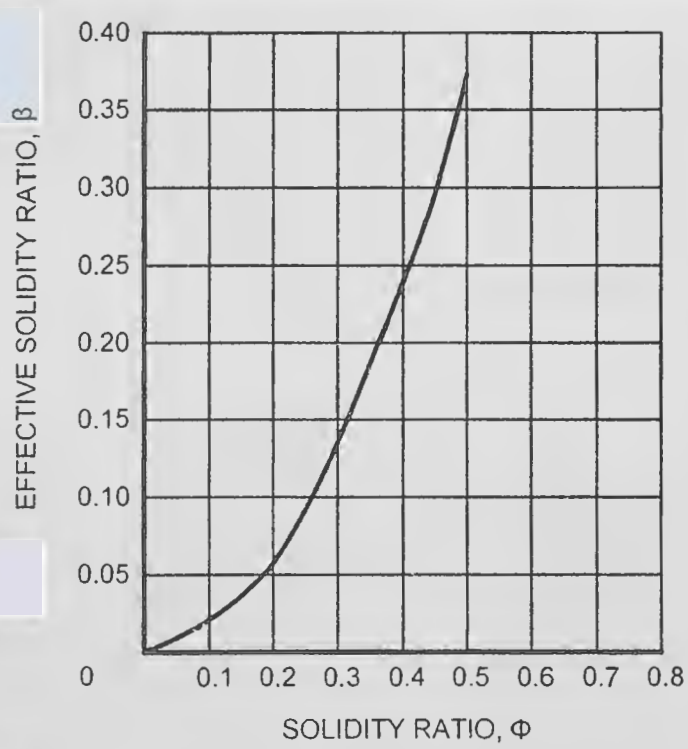

FIG. 6 EFFECTIVE SOLIDITY RATIO, FOR CIRCULAR SECTION MEMBERS

Table 31 Reduction Factor *K* for Individual Members

[*Clauses* 4.5.4.2.2 *and* 4.5.4.3.2(a)]

Sl No.	*l/b* or *l/D*	2	5	10	20	40	50	100	
(1)	(2)	(3)	(4)	(5)	(6)	(7)	(8)	(9)	(10)
i)	Circular cylinder, subcritical flow	0.58	0.62	0.68	0.74	0.82	0.87	0.98	1.00
ii)	Circular cylinder, supercritical flow ($D\bar{V}_d \geq 6$ m²/s)	0.80	0.80	0.82	0.90	0.98	0.99	1.00	1.00
iii)	For plate perpendicular to wind ($b\bar{V}_d \geq 6$ m²/s)	0.62	0.66	0.69	0.81	0.87	0.90	0.95	1.00

4.5.4.3.5 *Lattice towers*

a) Force coefficient for lattice towers of square or equilateral triangle section with flat- sided members for wind blowing against any face shall be as given in Table 36.

b) For square lattice towers with flat-sided members the maximum load, which occurs when the wind blows into a corner, shall be taken as 1.2 times the load for the wind blowing against a face.

c) For equilateral triangle lattice towers with flat-sided members, the load may be assumed to be constant for any inclination of wind to a face.

d) Force coefficients for lattice towers of square section with circular members, all in the same flow regime, may be as given in Table 37.

e) Force coefficients for lattice towers of equi-lateral-triangle section with circular members all in the same flow regime may be as given in Table 38.

4.5.4.3.6 *Tower appurtenances*

The wind loading on tower appurtenances, such as ladders, conduits, lights, elevators, etc, shall be calculated using appropriate net pressure-coefficients for these elements. Allowance may be made for shielding effect from other elements.

4.6 Interference Effects

4.6.1 *General*

Wind interference is caused by modification in the wind characteristics produced by the obstruction caused by an object or a building/structure in the path of the wind. If such wind strikes another structure, the wind pressures usually get enhanced, though there can also be some shielding effect between two very closely spaced buildings/structures. The actual phenomenon is too complex to justify generalization of the wind forces/ pressures produced due to interference which can only be ascertained by detailed wind tunnel/CFD studies. However, some guidance can be provided for the purpose of preliminary design. To account for the effect of interference, a wind interference factor (IF) has been introduced as a multiplying factor to be applied to the design wind pressure/force. Interference effects can be more significant for tall buildings. The interference factor is defined as the ratio between the enhanced pressure/force in the grouped configuration to the corresponding pressure/force in isolated configuration. Since the values of IF can vary considerably based on building geometry and location, the given values of IF are a kind of median values and are meant only for preliminary design estimates. The designer is advised that for assigning values of IF for final design particularly for tall buildings, specialist literature be consulted or a wind tunnel study carried out.

4.6.2 *Roof of Buildings of Height Less than 20 m*

Maximum increase in wind force on the roof due to interference from similar buildings in case of closely spaced buildings of height less than 20 m with flat roofs may be up to 25 percent for centre-to-centre distance (x) between the buildings of 5 times the dimension (b) of the interfering building normal to the direction of wind (*see* Fig. 7). Interference effect beyond 20b may be considered to be negligible. For intermediate spacing linear interpolation may be used.

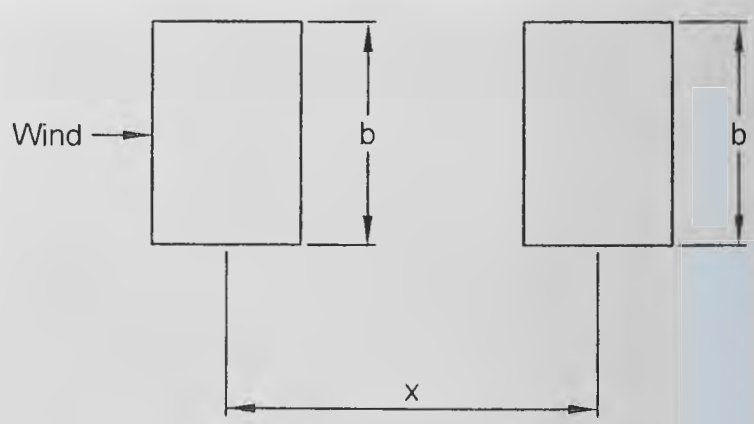

FIG. 7 BUILDINGS IN TANDEM CAUSING INTERFERENCE EFFECT

Table 32 Force Coefficients, C_f for Individual Structural Members of Infinite Length
[*Clause* 4.5.4.3.2(b)]

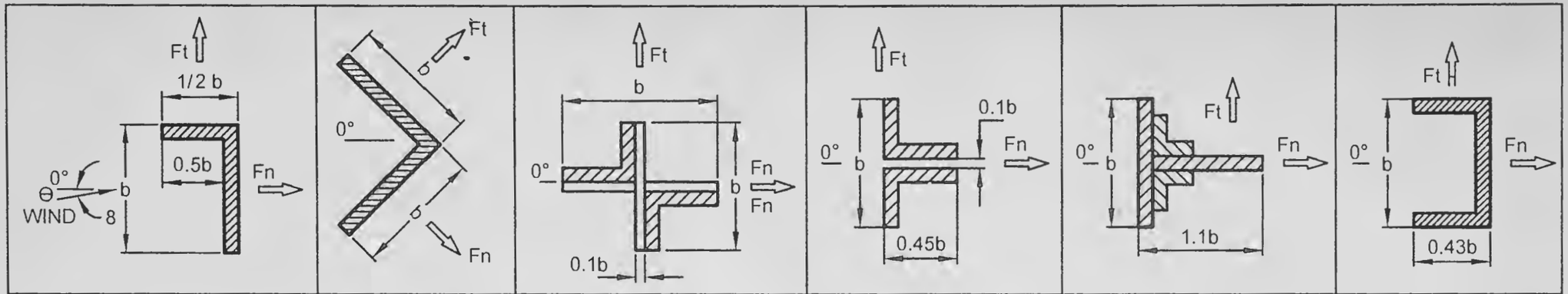

Θ Degree	C_{fn}	C_{ft}	C_{fn}	C_{ft}	C_{fn}	C_{ft}	C_{fn}	C_{ft}	C_{fn}	C_{ft}	C_{fn}	C_{ft}
0	+ 1.9	+ 0.95	+ 1.8	+ 1.8	+ 1.75	+ 0.1	+ 1.6	0	+ 2.0	0	+ 2.05	0
45	+ 1.8	+ 0.8	+ 2.1	+ 1.8	+ 0.85	+ 0.85	+ 1.5	- 0.1	+ 1.2	+ 0.9	+ 1.85	+ 0.6
90	+ 2.0	+ 1.7	- 1.9	- 1.0	+ 0.1	+ 1.75	- 0.95	+ 0.7	- 1.6	+ 2.15	0	+ 0.6
135	- 1.8	- 0.1	- 2.0	+ 0.3	- 0.75	+ 0.75	- 0.5	+ 1.05	- 1.1	+ 2.4	- 1.6	+ 0.4
180	- 2.0	+ 0.1	- 1.4	- 1.4	- 1.75	- 0.1	- 1.5	0	- 1.7	+ 2.1	- 1.8	0

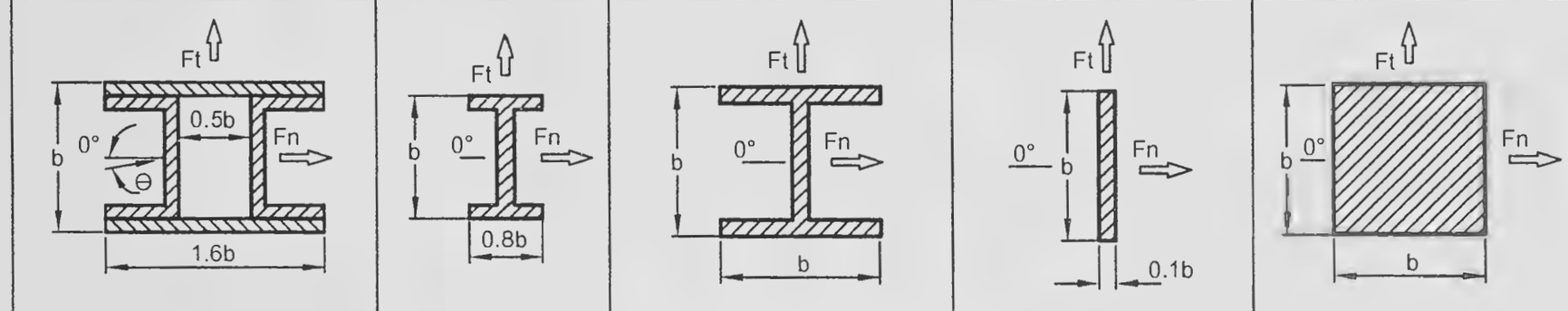

Θ Degree	C_{fn}	C_{ft}	C_{fn}	C_{ft}	C_{fn}	C_{ft}	C_{fn}	C_{ft}	C_{fn}	C_{ft}
0	+ 1.4	0	+ 2.05	0	+ 1.6	0	+ 2.0	0	+ 2.0	0
45	+ 1.2	+ 1.6	+ 1.95	+ 0.6	+ 1.5	+ 1.5	+ 1.8	+ 0.1	+ 1.55	+ 1.55
90	0	+ 2.2	+ 0.5	+ 0.9	0	+ 1.9	0	+ 0.1	0	+ 2.0

Table 33 Force Coefficients, C_f for Wires and Cables (l/D = 100)
[*Clause* 4.5.4.3.2(b)]

Sl No.	Flow Regime	Force Coefficient, C_f for			
		Smooth Surface	Moderately Smooth Wire (Galvanized or Painted)	Fine Stranded Cables	Thick Stranded Cables
(1)	(2)	(3)	(4)	(5)	(6)
i)	$\bar{D}V_d < 6$ m²/s	1.2	1.2	1.2	1.3
ii)	$\bar{D}V_d \geq 6$ m²/s	0.5	0.7	0.9	1.1

Table 34 Force Coefficients for Single Frames
(*Clause* 4.5.4.3.3)

Sl No.	Solidity Ratio, Φ	Force Coefficient, C_t for		
		Flat Sided Members	Circular Sections	
			Subcritical Flow ($\bar{D}V_d < 6$ m²/s)	Super Critical Flow ($\bar{D}V_d \geq 6$ m²/s)
(1)	(2)	(3)	(4)	(5)
i)	0.1	1.9	1.2	0.7
ii)	0.2	1.8	1.2	0.8
iii)	0.3	1.7	1.2	0.8
iv)	0.4	1.7	1.1	0.8
v)	0.5	1.6	1.1	0.8
vi)	0.75	1.6	1.5	1.4
vii)	1.00	2.0	2.0	2.0

NOTE — Linear interpolation between the values is permitted.

Table 35 Shielding Factor, η for Multiple Frames
(*Clause* 4.5.4.3.4)

Sl No.	Effective Solidity Ratio, Φe	Frame Spacing Ratio				
		< 0.5	1.0	2.0	4.0	> 8.0
(1)	(2)	(3)	(4)	(5)	(6)	(7)
i)	0	1.0	1.0	1.0	1.0	1.0
ii)	0.1	0.9	1.0	1.0	1.0	1.0
iii)	0.2	0.8	0.9	1.0	1.0	1.0
iv)	0.3	0.7	0.8	1.0	1.0	1.0
v)	0.4	0.6	0.7	1.0	1.0	1.0
vi)	0.5	0.5	0.6	0.9	1.0	1.0
vii)	0.7	0.3	0.6	0.8	0.9	1.0
viii)	1.0	0.3	0.6	0.6	0.8	1.0

NOTE — Linear interpolation between the values is permitted.

4.6.3 *Tall Buildings*

Based on studies on tall rectangular buildings, Fig. 8 gives various zones of interference. The interference factor (IF), which needs to be considered as a multiplication factor for wind loads corresponding to isolated building, may be assumed as follows for preliminary estimate of the wind loads under interference caused by another interfering tall building of same or more height located at different zones Z1 to Z4 as shown in Fig. 8:

Zone	Z1	Z2	Z3	Z4
IF	1.35	1.25	1.15	1.07

The interference effect due to buildings of height less than one-third of the height of the building under consideration may be considered to be negligible while for interference from a building of intermediate height, linear interpolation may be used between one-third and full height.

Table 36 Overall Force Coefficients for Towers Composed of Flat Sided Members
[*Clause* 4.5.4.3.5(a)]

Sl No.	Solidity Ratio, Φ	Force Coefficient For	
		Square Towers	Equilateral Triangular Towers
(1)	(2)	(3)	(4)
i)	< 0.1	3.8	3.1
ii)	0.2	3.3	2.7
iii)	0.3	2.8	2.3
iv)	0.4	2.3	1.9
v)	0.5	2.1	1.5

Table 37 Overall Force Coefficients for Square Towers Composed of Circular Members
[*Clause* 4.5.4.3.5 (d)]

Sl No.	Solidity Ratio of Front Face Φ	Force Coefficient For			
		Subcritical Flow ($\bar{D}V_d < 6$ m²/s)		Super Critical Flow ($\bar{D}V_d \geq 6$ m²/s)	
		Onto Face	Onto Corner	Onto Face	Onto Corner
(1)	(2)	(3)	(4)	(5)	(6)
i)	< 0.05	2.4	2.5	1.1	1.2
ii)	0.1	2.2	2.3	1.2	1.3
iii)	0.2	1.9	2.1	1.3	1.6
iv)	0.3	1.7	1.9	1.4	1.6
v)	0.4	1.6	1.9	1.4	1.6
vi)	0.5	1.4	1.9	1.4	1.6

Table 38 Overall Force Coefficients for Equilateral Triangular Towers Composed of Circular Members
[*Clause* 4.5.4.3.5(e)]

Sl No.	Solidity Ratio of Front Face Φ	Force Coefficient For	
		Subcritical Flow ($\bar{D}V_d < 6$ m²/s) All Wind Directions	Super Critical Flow ($\bar{D}V_d \geq 6$ m²/s) All Wind Directions
(1)	(2)	(3)	(4)
i)	< 0.05	1.8	0.8
ii)	0.1	1.7	0.8
iii)	0.2	1.6	1.1
iv)	0.3	1.5	1.1
v)	0.4	1.5	1.1
vi)	0.5	1.4	1.2

4.7 Dynamic Effects

4.7.1 *General*

Flexible slender structures and structural elements shall be investigated to ascertain the importance of wind induced oscillations or excitations in along wind and across wind directions.

In general, the following guidelines may be used for examining the problems of wind-induced oscillations:

a) Buildings and closed structures with a height to minimum lateral dimension ratio of more than about 5.0, or

b) Buildings and structures whose natural frequency in the first mode is less than 1.0 Hz.

Any building or structure which satisfies either of the above two criteria shall be examined for dynamic effects of wind.

NOTES

1 The fundamental time period (T), in second, may either be established by experimental observations on similar buildings or calculated by any rational method of analysis. In the absence of such data, T may be determined as follows for multi-storeyed buildings:

a) For moment resistant frames without bracings or shear walls resisting the lateral loads,

$$T = 0.1\,n$$

where

n = number of storeys, including basement storeys.

b) For all others,

$$T = \frac{0.09H}{\sqrt{d}}$$

where

H = total height of the main structures of the building, in m; and

d = maximum base dimension of building in metre in a direction parallel to the applied wind force.

2 If preliminary studies indicate that wind-induced oscillations are likely to be significant, investigations should be pursued with the aid of analytical methods or if necessary, by means of wind tunnel tests on models.

3 Across-wind motions may be due to lateral gustiness of the wind, unsteady wake flow (for example, vortex shedding), negative aerodynamic damping or due to a combination of these effects. These cross-wind motions may become critical in the design of tall buildings/structures.

4 Motions in the direction of wind (also known as buffeting) are caused by fluctuating wind force associated with gust. The excitation depends on gust energy available at the resonant frequency.

5 The eddies shed from an upstream body may intensify motion in the direction of the wind and may also affect cross-wind motion.

6 The designer should also be aware of the following three forms

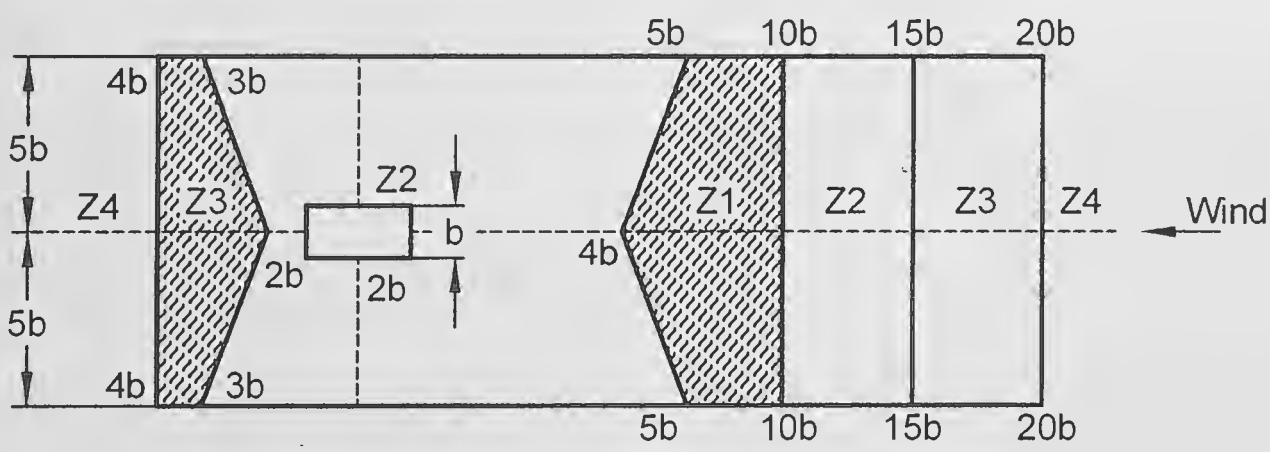

Z1 - Zone of high interference
Z2 - Zone of moderate interference
Z3 - Zone of low interference
Z4 - Zone of insignificant interference

FIG. 8 INTERFERENCE ZONES FOR TALL RECTANGULAR BUILDINGS OF SAME OR GREATER HEIGHT

of wind-induced motion which are characterized by increasing amplitude of oscillation with the increase of wind speed:

a) *Galloping* — Galloping is transverse oscillations of some structures due to the development of aerodynamic forces which are in phase with the motion. It is characterized by the progressively increasing amplitude of transverse vibration with increase of wind speed. The cross-sections which are particularly prone to this type of excitation include the following:

1) All structures with non-circular cross-sections, such as triangular, square, polygons, as well as angles, crosses, and T sections.

2) Twisted cables and cables with ice encrustations.

b) *Flutter* — Flutter is unstable oscillatory motion of a structure due to coupling between aerodynamic force and elastic deformation of the structure. Perhaps the most common form is oscillatory motion due to combined bending and torsion. Although oscillatory motion in each degree of freedom may be damped, instability can set in due to energy transfer from one mode of oscillation to another and the structure is seen to execute sustained or divergent oscillations with a type of motion which is a combination of the individual modes of vibration. Such energy transfer takes place when the natural frequencies of modes taken individually are close to each other (ratio being typically less than 2.0). Flutter can set in at wind speeds much less than those required for exciting the individual modes of motion. Long span suspension bridge decks or any member of a structure with large values of d/t (where d is the length of the member and t is its dimension parallel to wind stream) are prone to low speed flutter. Wind tunnel testing is required to determine critical flutter speeds and the likely structural response. Other types of flutter are single degree of freedom stall flutter, torsional flutter, etc.

c) *Ovalling* — Thin walled structures with open ends at one or both ends such as oil storage tanks and natural draught cooling towers in which the ratio of the diameter or minimum lateral dimension to the wall thickness is of the order of 100 or more are prone to ovalling oscillations. These oscillations are characterized by periodic radial deformation of the hollow structure.

7 Buildings and structures that may be subjected to significant wind excited oscillations require careful investigations. It is to be noted that wind induced oscillations may occur at wind speeds lower than the design wind speed.

8 Analytical methods for the evaluation of response of dynamic structures to wind loading can be found in the special publications.

9 In assessing wind loads due to such dynamic phenomenon as galloping, flutter and ovalling, in the absence of the required information either in the special publications or other literature, expert advice should be sought including experiments on models in boundary layer wind tunnels.

4.7.2 *Motion due to Vortex Shedding*

4.7.2.1 *Slender structures*

For a structure, the vortex shedding frequency, f_s, shall be determined by the following formula:

$$f_s = \frac{S_t \overline{V}_{z,H}}{b}$$

where

S_t = Strouhal number,

$\overline{V}_{z,H}$ = hourly mean wind speed at height z, and

b = breadth of a structure or structural member normal to the wind direction in the horizontal plane.

a) *Circular structures* — For structures of circular cross-section:

S_t = 0.20 for $D\overline{V}_{z,H}$ less than 6 m²/s, and

= 0.25 for $D\overline{V}_{z,H}$ more than or equal to 6 m²/s.

b) *Rectangular structures* — For structures of rectangular cross-section:

$S_t = 0.10$

NOTES

1 Significant cross wind motions may be produced by vortex shedding, if the natural frequency of the structure or structural element is equal to the frequency of the vortex shedding within the range of expected wind speeds. In such cases, further analysis should be carried out on the basis of special publications.

2 Unlined welded steel cylindrical structures are prone to excitations by vortex shedding.

3 Intensification of the effects of periodic vortex shedding has been reported in cases where two or more similar structures are located in close proximity, for example at less than 20b apart, where b is the dimension of the structure normal to the wind.

4 The formulae given in **4.7.2.1**(a) is valid for infinitely long cylindrical structures. The value of S_t decreases slowly as the ratio of length to maximum transverse width decreases, the reduction being up to about half the value, if the structure is only three times higher than its width. Vortex shedding need not be considered, if the ratio of length to maximum transverse dimension is less than 2.0.

4.8 Dynamic Wind Response

4.8.1 *General*

Tall buildings/structures which are 'wind sensitive' shall be designed for dynamic wind loads. Hourly mean wind speed is used as a reference wind speed to be used in dynamic wind analysis. For calculation of along wind loads and response (bending moments, shear forces, or tip deflections) the Gust Factor (GF) method is used as specified in **4.8.2**. The across wind design peak base overturning moment and tip deflection shall be calculated using **4.8.3**.

4.8.2 *Along Wind Response*

For calculation of along-wind load effects at a level s on a building/structure, the design hourly mean wind pressure at height z shall be multiplied by the Gust Factor (G). This factor is dependent on both the overall height h and the level s under consideration (*see* Fig. 9). For calculation of base bending moment and deflection

at the top of the building/structure, 's' should be taken as zero.

Note that $0 < s < h$, and $s < z < h$.

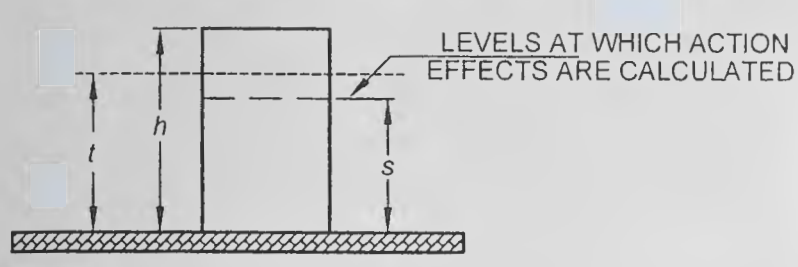

FIG. 9 NOTATIONS FOR HEIGHTS

The design peak along wind base bending moment (M_a) shall be obtained by summing the moments resulting from design peak along wind loads acting at different heights, z, along the height of the building/structure and can be obtained from,

$$M_a = \sum F_z z$$

$$F_z = C_{f,z} A_z \overline{p}_d G$$

where

F_z = design peak along wind load on the building/structure at any height z;

A_z = effective frontal area of the building/structure at any height z, in m^2;

$\overline{p}_d$ = design hourly mean wind pressure corresponding to $\overline{V}_{z,d}$ and obtained as $0.6\overline{V}_{z,d}$ (N/m^2);

$\overline{V}_{z,d}$ = design hourly mean wind speed at height z, in m/s (*see* **4.4.4**);

$C_{f,z}$ = drag force coefficient of the building/structure corresponding to the area A_z;

G = Gust Factor and is given by:

$$= 1 + r\sqrt{\left[g_v^2 B_s (1+\phi)^2 + \frac{H_s g_R^2 SE}{\beta}\right]}$$

where

r = roughness factor which is twice the longitudinal turbulence intensity, $I_{h,i}$ (*see* **4.4.5**);

g_v = peak factor for upwind velocity fluctuation

= 3.0 for category 1 and 2 terrains; and

= 4.0 for category 3 and 4 terrains;

B_s = background factor indicating the measure of slowly varying component of fluctuating wind load caused by the lower frequency wind speed variations

$$= \frac{1}{\left[1 + \frac{\sqrt{0.26(h-s)^2 + 0.46 b_{sh}^2}}{L_h}\right]}$$

where

b_{sh} = average breadth of the building/structure between heights s and h;

L_h = measure of effective turbulence length scale at the height, h, in m;

$$= 85\left(\frac{h}{10}\right)^{0.25} \text{ for terrain category 1 to 3, and}$$

$$= 70\left(\frac{h}{10}\right)^{0.25} \text{ for terrain category 4}$$

ϕ = factor to account for the second order turbulence intensity;

$$= \frac{g_v I_{h,i}\sqrt{B_s}}{2}$$

$I_{h,i}$ = turbulence intensity at height h in terrain category i;

H_s = height factor for resonance response;

$$= 1 + \left(\frac{s}{h}\right)^2$$

S = size reduction factor given by:

$$= \frac{1}{\left[1 + \frac{3.5 f_a h}{\overline{V}_{h,d}}\right]\left[1 + \frac{4 f_a b_{0h}}{\overline{V}_{h,d}}\right]}$$

where

b_{0h} = average breadth of the building/structure between 0 and h;

E = spectrum of turbulence in the approaching wind stream

$$= \frac{\pi N}{\left(1 + 70.8 N^2\right)^{5/6}}$$

where

N = effective reduced frequency

$$= \frac{f_a L_h}{\overline{V}_{h,d}}$$

f_a = first mode natural frequency of the building/structure in along wind direction, in Hz;

$\overline{V}_{h,d}$ = design hourly mean wind speed at height, h, in m/s (*see* **4.4.4**);

β = damping coefficient of the building/structure (*see* Table 39); and

g_R = peak factor for resonant response.

$$= \sqrt{[2\ln(3\,600 f_a)]}$$

Table 39 Suggested Values of Structural Damping Coefficients
(*Clause* 4.8.2)

Sl No.	Kind of Structure	Damping Coefficient β
(1)	(2)	(3)
i)	Welded steel structures	0.010
ii)	Bolted steel structures/RCC structures	0.020
iii)	Prestressed concrete structures	0.016

4.8.2.1 *Peak acceleration in along wind direction*

The peak acceleration at the top of the building structure in along wind direction ($\hat{\ddot{x}}$ in m/s^2) is given by the following equation:

$$\hat{\ddot{x}} = (2\pi f_a)^2 \bar{x}\, g_R\, r \sqrt{\frac{SE}{\beta}}$$

where

$\bar{x}$ = mean deflection at the position where the acceleration is required. Other notations are same as given in **9.2**.

For computing the peak acceleration in the along wind direction, a mean wind speed at the height of the building /structure, $\overline{V_h}$ corresponding to a 5 year mean return period shall be used. A reduced value of 0.011 is also suggested for the structural damping, β for reinforced concrete structures.

4.8.3 *Across Wind Response*

This section gives method for determining equivalent static wind load and base overturning moment in the across wind direction for tall enclosed buildings and towers of rectangular cross-section. Calculation of across wind response is not required for lattice towers.

The across wind design peak base bending moment M_c for enclosed buildings and towers shall be determined as follows:

$$M_c = 0.5 g_h \bar{p}_h b h^2 (1.06 - 0.06k) \sqrt{\frac{\pi C_{fs}}{\beta}}$$

where

g_h = peak factor;

= $\sqrt{[2\ln(3\ 600 f_c)]}$ in cross wind direction;

$\bar{p}_h$ = hourly mean wind pressure at height h, in Pa;

b = breadth of the structure normal to the wind, in m;

h = height of the structure, in m;

k = mode shape power exponent for representation of the fundamental mode shape as represented by:

$$\psi(z) = \left(\frac{z}{h}\right)^k \text{; and}$$

f_c = first mode natural frequency of the building/ structure in across wind direction, in Hz.

The across wind load distribution on the building/ structure can be obtained from M_c using linear distribution of loads as given below:

$$F_{z,c} = \left(\frac{3M_c}{h^2}\right)\left(\frac{z}{h}\right)$$

where $F_{z,c}$ = across wind load per unit height at height z.

4.8.3.1 *Peak acceleration in across wind direction*

The peak acceleration at the top of the building structure in across-wind direction ($\hat{\ddot{y}}$ in m/s^2) with approximately constant mass per unit height shall be determined as follows:

$$\hat{\ddot{y}} = 1.5 \frac{g_h \bar{p}_h b}{m_0} (0.76 + 0.24k) \sqrt{\left(\frac{\pi C_{fs}}{\beta}\right)}$$

Typical values of the mode shape power exponent, k are as follows:

a) uniform cantilever, $k = 1.5$

b) slender framed structure (moment resisting), $k = 0.5$

c) building with a central core and moment resisting façade, $k = 1.0$

d) lattice tower decreasing in stiffness with height, or a tower with a large mass at the top, $k = 2.3$

C_{fs} = across wind force spectrum coefficient generalized for a linear mode (*see* Fig. 10);

β = damping coefficient of the building/structure (*see* Table 39); and

m_0 = average mass per unit height of the structure, in kg/m.

4.8.4 *Combination of Along Wind and Across Wind Load Effects*

The along wind and across wind loads have to be applied simultaneously on the building/structure during design.

5 SEISMIC FORCE

This clause primarily deals with earthquake hazard assessment and earthquake-resistant design of buildings.

All structures, like parking structures, security cabins and ancillary structures need to be designed for

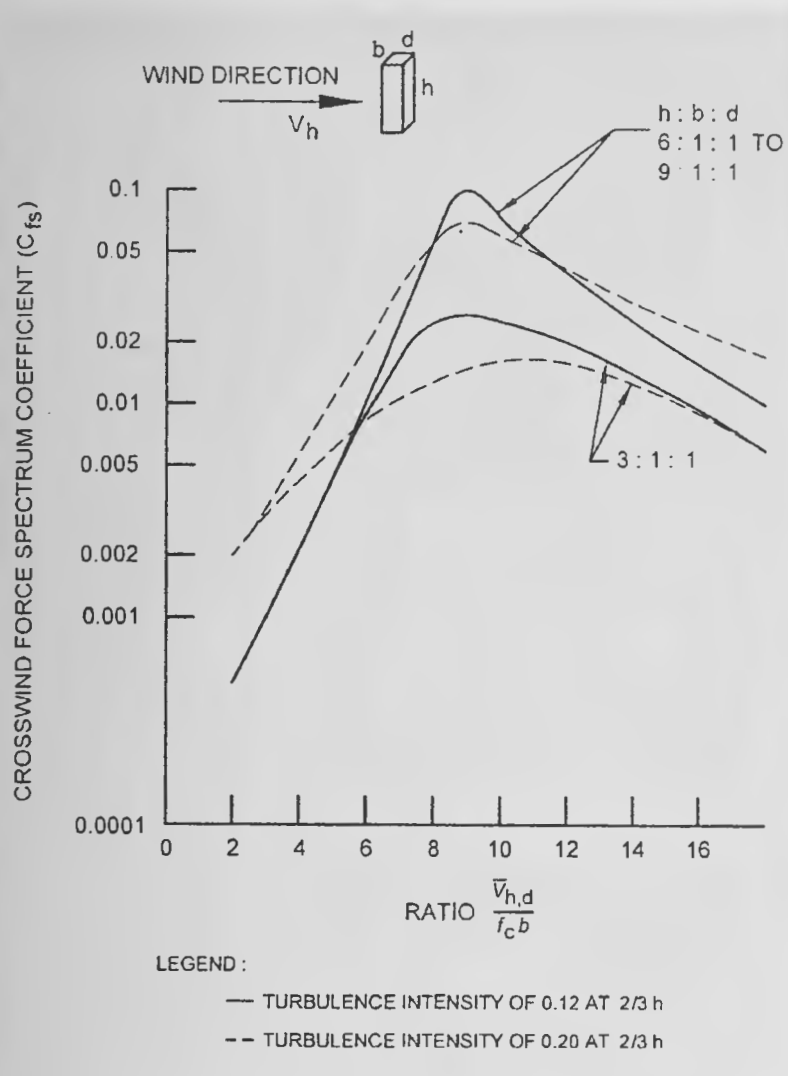

10A VALUES OF THE CROSS WIND FORCE SPECTRUM COEFFICIENT FOR SQUARE SECTION BUILDINGS

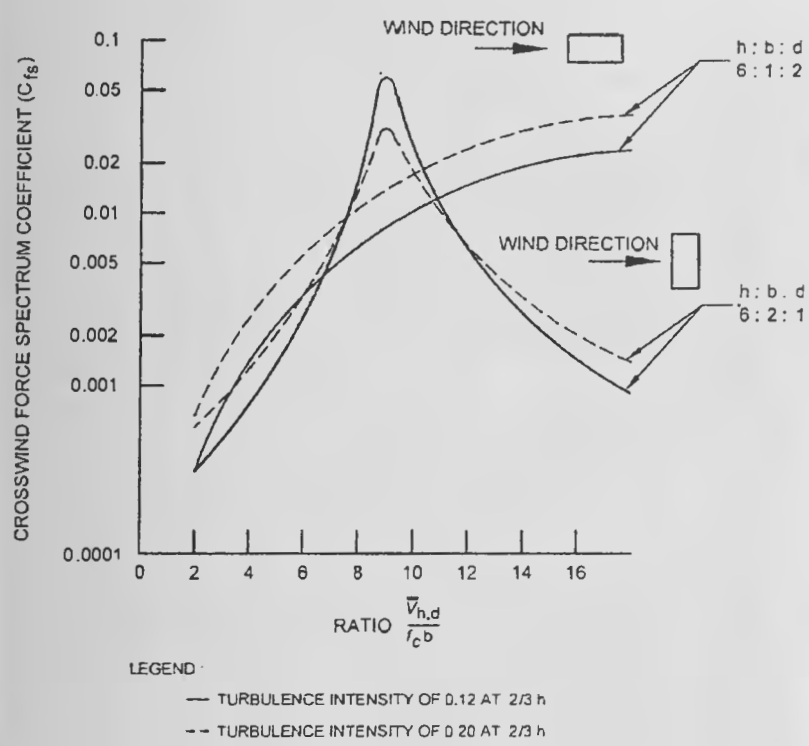

10B VALUES OF THE CROSS WIND FORCE SPECTRUM COEFFICIENT FOR 2:1 AND 1:2 RECTANGULAR SECTION BUILDINGS

FIG. 10 WIND FORCE SPECTRUM COEFFICIENT

appropriate earthquake effects as per this clause. Also, temporary elements, such as scaffolding and temporary excavations, need to be designed as per this clause. This clause does not deal with construction features relating to earthquake-resistant buildings and other structures. For guidance on earthquake-resistant construction of buildings, reference may be made to the latest revisions of the following good practice [6 1(6)].

The provisions of this clause are applicable even to critical and special structures, like nuclear power plants and petroleum refinery plants. For such structures, additional requirements may be imposed based on special studies, such as site-specific hazard assessment. In such cases, the earthquake effects specified by this clause shall be taken as at least the minimum.

For the purpose of this clause the symbols given at Annex G are applicable.

5.1 Terminology

For the purpose of this clause, definitions given below shall apply to all structures, in general. For definition of terms pertaining to soil mechanics and soil dynamics, reference may be made to Part 6 'Structural Design, Section 2 Soils and Foundations' of the Code; and for definition of terms pertaining to 'Loads', **3.2** and **4.3** may be referred.

5.1.1 *Closely-Spaced Modes* — Closely-spaced modes of a structure are those of the natural modes of oscillation of a structure, whose natural frequencies differ from each other by 10 percent or less of the lower frequency.

5.1.2 *Critical Damping* — The damping beyond which the free vibration motion will not be oscillatory.

5.1.3 *Damping* — The effect of internal friction, inelasticity of materials, slipping, sliding, etc, in reducing the amplitude of oscillation; it is expressed as a fraction of critical damping (*see* **5.1.2**).

5.1.4 *Design Acceleration Spectrum* — Design acceleration spectrum refers to an average smoothened graph of maximum acceleration as a function of natural frequency or natural period of oscillation for a specified damping ratio for the expected earthquake excitations at the base of a single degree of freedom system.

5.1.5 *Design Horizontal Acceleration Coefficient* (A_h) — It is a horizontal acceleration coefficient that shall be used for design of structures.

5.1.6 *Design Horizontal Force* — It is the horizontal seismic force prescribed by this Section that shall be used to design a structure.

5.1.7 *Ductility* — It is the capacity of a structure (or its members) to undergo large inelastic deformations without significant loss of strength or stiffness.

5.1.8 *Epicentre* — It is the geographical point on the

surface of earth vertically above the point of origin of the earthquake.

5.1.9 *Floor Response Spectrum* — It is the response spectrum (for a chosen material damping value) of the time history of the shaking generated at a floor of a structure, when the structure is subjected to a given earthquake ground motion at its base.

5.1.10 *Importance Factor* (I) — It is a factor used to estimate design seismic force depending on the functional use of the structure, characterized by hazardous consequences of its failure, post-earthquake functional needs, historical value, or economic importance.

5.1.11 *Intensity of Earthquake* — It is the measure of the strength of ground shaking manifested at a place during the earthquake, and is indicated by a roman capital numeral on the MSK scale of seismic intensity (*see* Annex H).

5.1.12 *Liquefaction* — It is a state primarily in saturated cohesionless soils wherein the effective shear strength is reduced to negligible value for all engineering purposes, when the pore pressure approaches the total confining pressure during earthquake shaking. In this condition, the soil tends to behave like a fluid mass (*see* Annex J).

5.1.13 *Lithological Features* — Features that reflect the nature of the geological formation of the earth's crust above bed rock characterized on the basis of structure, mineralogical composition and grain size.

5.1.14 *Modal Mass* (M_k) *in Mode* (k) *of a Structure* — It is a part of the total seismic mass of the structure that is effective in natural mode k of oscillation during horizontal or vertical ground motion.

5.1.15 *Modal Participation Factor* (P_k) *in Mode* (k) *of a Structure* — The amount by which natural mode k contributes to overall oscillation of the structure during horizontal or vertical earthquake ground motion. Since the amplitudes of mode shapes can be scaled arbitrarily, the value of this factor depends on the scaling used for defining mode shapes.

5.1.16 *Modes of Oscillation* — *See* **5.1.19**.

5.1.17 *Mode Shape Coefficient* (ϕ_{ik}) — It is the spatial deformation pattern of oscillation along degree of freedom i, when the structure is oscillating in its natural mode k. A structure with N degrees of freedom possesses N natural periods and N associated natural mode shapes. These natural mode shapes are together presented in the form of a mode shape matrix $[\phi]$, in which each column represents one natural mode shape. The element ϕ_{ik} is called the mode shape coefficient associated with degree of freedom i, when the structure is oscillating in mode k.

5.1.18 *Natural Period* (T_k) *in Mode* (k) *of Oscillation* — The time taken (in second) by the structure to complete one cycle of oscillation in its natural mode k of oscillation.

5.1.18.1 *Fundamental lateral translational natural period* (T_1) — It is the longest time taken (in second) by the structure to complete one cycle of oscillation in its lateral translational mode of oscillation in the considered direction of earthquake shaking. This mode of oscillation is called the fundamental lateral translational natural mode of oscillation. A three-dimensional model of a structure will have one such fundamental lateral translational mode of oscillation along each of the two orthogonal plan directions.

5.1.19 *Normal Mode of Oscillation* — The mode of oscillation in which there are special undamped free oscillations in which all points on the structure oscillate harmonically at the same frequency (or period), such that all these points reach their individual maximum responses simultaneously.

5.1.20 *Peak Ground Acceleration* — It is the maximum acceleration of the ground in a given direction of ground shaking. Here, the acceleration refers to that of the horizontal motion, unless specified otherwise.

5.1.21 *Response Reduction Factor* (R) — It is the factor by which the base shear induced in a structure, if it were to remain elastic, is reduced to obtain the design base shear. It depends on the perceived seismic damage performance of the structure, characterized by ductile or brittle deformations, redundancy in the structure, or overstrength inherent in the design process.

5.1.22 *Response Spectrum* — It is the representation of maximum responses of a spectrum of idealized single degree freedom systems of different natural periods but having the same damping, under the action of the same earthquake ground motion at their bases. The response referred to here can be maximum absolute acceleration, maximum relative velocity, or maximum relative displacement.

5.1.23 *Response Acceleration Coefficient of a Structure* (S_a/g) — It is a factor denoting the normalized design acceleration spectrum value to be considered for the design of structures subjected to earthquake ground shaking; this value depends on the natural period of oscillation of the structure and damping to be considered in the design of the structure.

5.1.24 *Seismic Mass of a Floor* — It is the seismic

weight of the floor divided by acceleration due to gravity.

5.1.25 *Seismic Mass of a Structure* — It is the seismic weight of a structure divided by acceleration due to gravity.

5.1.26 *Seismic Weight of a Floor* (W) — It is the sum of dead load of the floor, appropriate contributions of weights of columns, walls and any other permanent elements from the storeys above and below, finishes and services, and appropriate amounts of specified imposed load on the floor.

5.1.27 *Seismic Weight of a Structure* (W) — It is the sum of seismic weights of all floors.

5.1.28 *Seismic Zone Factor* (Z) — It is the value of peak ground acceleration considered by this Section for the design of structures located in each seismic zone.

5.1.29 *Time History Analysis* — It is an analysis of the dynamic response of the structure at each instant of time, when its base is subjected to a specific ground motion time history.

5.2 Special Terminology for Buildings

5.2.1 The definitions given below shall apply for the purpose of earthquake resistant design of buildings, as enumerated in this Section.

5.2.2 *Base* — It is the level at which inertia forces generated in the building are considered to be transferred to the ground through the foundation. For buildings with basements, it is considered at the bottommost basement level. For buildings resting on,

a) pile foundations, it is considered to be at the top of pile cap;
b) raft, it is considered to be at the top of raft; and
c) footings, it is considered to be at the top of the footing.

For buildings with combined types of foundation, the base is considered as the bottom-most level of the bases of the constituent individual foundations as per definitions above.

5.2.3 *Base Dimension* (d) — It is the dimension (in metre) of the base of the building along a direction of shaking.

5.2.4 *Centre of Mass* (CM) — The point in the floor of a building through which the resultant of the inertia force of the floor is considered to act during earthquake shaking. Unless otherwise stated, the inertia force considered is that associated with the horizontal shaking of the building.

5.2.5 *Centre of Resistance* (CR)

5.2.5.1 *For single storey buildings* — It is the point on the roof of a building through which when the resultant internal resistance acts, the building undergoes,

a) pure translation in the horizontal direction; and
b) no twist about vertical axis passing through the CR.

5.2.5.2 *For multi-storey buildings* — It is the set of points on the horizontal floors of a multi-storey building through which, when the resultant incremental internal resistances across those floors act, all floors of the building undergo,

a) pure translation in the horizontal direction; and
b) no twist about vertical axis passing through the CR.

5.2.6 *Eccentricity*

5.2.6.1 *Design eccentricity* (e_{di}) — It is the value of eccentricity to be used for floor i in calculations of design torsion effects.

5.2.6.2 *Static eccentricity* (e_{si}) — It is the distance between centre of mass (CM) and centre of resistance (CR) of floor i.

5.2.7 *Design Seismic Base Shear* (V_B) — It is the horizontal lateral force in the considered direction of earthquake shaking that the structure shall be designed for.

5.2.8 *Diaphragm* — It is a horizontal or nearly horizontal structural system (for example, reinforced concrete floors and horizontal bracing systems), which transmits lateral forces to vertical elements connected to it.

5.2.9 *Height of Floor* (h_i) — It is the difference in vertical elevations (in metre) of the base of the building and top of floor i of the building.

5.2.10 *Height of Building* (h) — It is the height of building (in metre) from its base to top of roof level,

a) excluding the height of basement storeys, if basement walls are connected with the ground floor slab or basement walls are fitted between the building columns, but
b) including the height of basement storeys, if basement walls are not connected with the ground floor slab and basement walls are not fitted between the building columns.

In step-back buildings, it shall be taken as the average of heights of all steps from the base, weighted with their corresponding floor areas. And, in buildings founded on hill slopes, it shall be taken as the height of the roof from the top of the highest footing level or pile cap level.

5.2.11 *Horizontal Bracing System* — It is a horizontal truss system that serves the same function as a diaphragm.

5.2.12 *Joints* — These are portions of columns that are common to beams/braces and columns, which frame into columns.

5.2.13 *Lateral Force Resisting System* — It is part of the structural system, and consists of all structural members that resist lateral inertia forces induced in the building during earthquake shaking.

5.2.14 *Moment-Resisting Frame* — It is an assembly of beams and columns that resist induced and externally applied forces primarily by flexure.

5.2.14.1 *Ordinary moment-resisting frame (OMRF)* — It is a moment-resisting frame designed and detailed as per relevant good practices [6-1(7)], but not meeting special detailing requirements for ductile behaviour as per good practices [6-1(8)] or [6-1(9)], as applicable.

5.2.14.2 *Special moment-resisting frame (SMRF)* — It is a moment-resisting frame designed and detailed as per relevant good practices [6-1(7)], and meeting special detailing requirements for ductile behaviour as per good practices [6-1(8)] or [6-1(9)], as applicable.

5.2.15 *Number of Storeys* (n) — It is the number of levels of a building above the base at which mass is present in substantive amounts. This,

a) excludes the basement storeys, where basement walls are connected with the ground floor deck or fitted between the building columns; and

b) includes the basement storeys, when they are not so connected.

5.2.16 *Core Structural Walls, Perimeter Columns, Outriggers and Belt Truss System* — It is a structural system comprising a core of structural walls and perimeter columns, resisting the vertical and lateral loads, with

a) the core structural walls connected to select perimeter column element(s) (often termed outrigged columns) by deep beam elements, known as outriggers, at discrete locations along the height of the building; and

b) the outrigged columns connected by deep beam elements (often known as belt truss), typically at the same level as the outrigger elements.

A structure with this structural system has enhanced lateral stiffness, wherein core structural walls and perimeter columns are mobilized to act with each other through the outriggers, and the perimeter columns themselves through the belt truss. The global lateral stiffness is sensitive to: flexural stiffness of the core element, the flexural stiffness of the outrigger element(s), the axial stiffness of the outrigged column(s), and the flexural stiffness of the outrigger elements connecting the core structural walls to the perimeter columns.

5.2.17 *Principal Plan Axes* — These are two mutually perpendicular horizontal directions in plan of a building along which the geometry of the building is oriented.

5.2.18 *P-Δ Effect* — It is the secondary effect on shear forces and bending moments of lateral force resisting elements generated under the action of the vertical loads, interacting with the lateral displacement of building resulting from seismic effects.

5.2.19 *RC Structural Wall* — It is a wall designed to resist lateral forces acting in its own plane.

5.2.19.1 *Ordinary RC structural wall* — It is a reinforced concrete (RC) structural wall designed and detailed as per good practice [6-1(10)], but not meeting special detailing requirements for ductile behaviour as per good practice [6-1(8)].

5.2.19.2 *Special RC structural wall* — It is a RC structural wall designed and detailed in accordance with and meeting special detailing requirements for ductile behaviour, as per good practice [6-1(8)].

5.2.20 *Storey* — It is the space between two adjacent floors.

5.2.20.1 *Soft storey* — It is one in which the lateral stiffness is less than that in the storey above. The storey lateral stiffness is the total stiffness of all seismic force resisting elements resisting lateral earthquake shaking effects in the considered direction.

5.2.20.2 *Weak storey* — It is one in which the storey lateral strength [cumulative design shear strength of all structural members other than that of unreinforced masonry (URM) infills] is less than that in the storey above. The storey lateral strength is the total strength of all seismic force resisting elements sharing the lateral storey shear in the considered direction.

5.2.21 *Storey Drift* — It is the relative displacement between the floors above and/or below the storey under consideration.

5.2.22 *Storey Shear* (V_i) — It is the sum of design lateral forces at all levels above the storey i under consideration.

5.2.23 *Storey Lateral Shear Strength* (S_i) — It is the total lateral strength of all lateral force resisting

elements in the storey considered in a principal plan direction of the building.

5.2.24 *Storey Lateral Translational Stiffness* (K_i) — It is the total lateral translational stiffness of all lateral force resisting elements in the storey considered in a principal plan direction of the building.

5.2.25 *RC Structural Wall Plan Density* (ρ_{sw}) — It is the ratio of the cross-sectional area at the plinth level of RC structural walls resisting the lateral load and the plinth of the building, expressed as a percentage.

5.3 General Principles and Design Criteria

5.3.1 *General Principles*

5.3.1.1 *Ground motion*

The characteristics (intensity, duration, frequency content, etc) of seismic ground vibrations expected at any site depend on magnitude of earthquake, its focal depth, epicentral distance, characteristics of the path through which the seismic waves travel, and soil strata on which the structure is founded. The random earthquake ground motions, which cause the structure to oscillate, can be resolved in any three mutually perpendicular directions. The predominant direction of ground vibration is usually horizontal.

Effects of earthquake-induced vertical shaking can be significant for overall stability analysis of structures, especially in structures (a) with large spans, and (b) those in which stability is a criterion for design. Reduction in gravity force due to vertical ground motions can be detrimental particularly in prestressed horizontal members, cantilevered members and gravity structures. Hence, special attention shall be paid to effects of vertical ground motion on prestressed or cantilevered beams, girders and slabs.

5.3.1.2 The response of a structure to ground vibrations depends on (a) type of foundation; (b) materials, form, size and mode of construction of structures; and (c) duration and characteristics of ground motion. This Section specifies design forces for structures founded on rocks or soils, which do not settle, liquefy or slide due to loss of strength during earthquake ground vibrations.

5.3.1.3 Actual forces that appear on structures during earthquakes are much higher than the design forces specified in the Section. Ductility arising from inelastic material behaviour with appropriate design and detailing, and overstrength resulting from the additional reserve strength in structures over and above the design strength are relied upon for the deficit in actual and design lateral loads. In other words, earthquake resistant design as per this Section relies on inelastic behaviour of structures. But, the maximum ductility that can be realized in structures is limited. Therefore, structures shall be designed for at least the minimum design lateral force specified in this Section.

5.3.1.4 Members and connections of reinforced and prestressed concrete structures shall be designed (as per good practices [6-1(11)] such that premature failure does not occur due to shear or bond. Some provisions for appropriate ductile detailing of RC members are given in good practice [6-1(8)]. Members and their connections of steel structures should be so proportioned that high ductility is obtained in the structure, avoiding premature failure due to elastic or inelastic buckling of any type. Some provisions for appropriate ductile detailing of steel members are given in good practice [6-1(9)].

5.3.1.5 The soil-structure interaction refers to effects of the flexibility of supporting soil-foundation system on the response of structure. Soil-structure interaction may not be considered in the seismic analysis of structures supported on rock or rock-like material at shallow depth.

5.3.1.6 Equipment and other systems, which are supported at various floor levels of a structure, will be subjected to different motions at their support points. In such cases, it may be necessary to obtain floor response spectra for design of equipment and its supports. For details, reference may be made to good practice [6-1(12)].

5.3.1.7 *Additions to existing structures*

Additions shall be made to existing structures only as follows:

a) An addition that is structurally independent from an existing structure shall be designed and constructed in accordance with the seismic requirements for new structures.

b) An addition that is structurally connected to an existing structure shall be designed and constructed such that the entire structure conforms to the seismic force resistance requirements for new structures, unless the following three conditions are complied with:

   1) Addition shall comply with the requirements for new structures,

   2) Addition shall not increase the seismic forces in any structural element of the existing structures by more than 5 percent, unless the capacity of the element subject to the increased force is

still in compliance with this Section, and

3) Addition shall not decrease the seismic resistance of any structural element of the existing structure unless reduced resistance is equal to or greater than that required for new structures.

5.3.1.8 *Change in occupancy*

When a change of occupancy results in a structure being reclassified to a higher importance factor (I), the structure shall conform to seismic requirements laid down for new structures with the higher importance factor.

5.3.2 *Assumptions*

The following assumptions shall be made in the earthquake-resistant design of structures:

a) Earthquake ground motions are complex and irregular, consisting of several frequencies and of varying amplitudes each lasting for a small duration. Therefore, usually, resonance of the type as visualized under steady-state sinusoidal excitations will not occur, as it would need time to build up such amplitudes. But, there are exceptions where resonance-like conditions have been seen to occur between long distance waves and tall structures founded on deep soft soils.

b) Earthquake is not likely to occur simultaneously with high wind, maximum flood or maximum sea waves.

c) The values of elastic modulus of materials, wherever required, will be taken as for static analysis, unless more definite values are available for use in dynamic conditions {*see* good practice [6-1(13)]}.

5.3.3 *Load Combinations and Increase in Permissible Stresses*

5.3.3.1 *Load combinations*

The load combinations shall be considered as specified in respective standards due to all load effects mentioned therein. In addition, those specified in this standard shall be applicable, which include earthquake effects.

5.3.3.1.1 Even when load combinations that do not contain earthquake effects, indicate larger demands than combinations including them, the provisions shall be adopted related to design, ductile detailing and construction relevant for earthquake conditions, which are given in this Section, good practice [6-1(8)] and good practice [6-1(9)].

5.3.3.2 *Design horizontal earthquake load*

5.3.3.2.1 When lateral load resisting elements are oriented along two mutually orthogonal horizontal directions, structure shall be designed for effects due to full design earthquake load in one horizontal direction at a time, and not in both directions simultaneously.

5.3.3.2.2 When lateral load resisting elements are not oriented along mutually orthogonal horizontal directions [as per **5.4.1** and Sl No. (v) of Table 44], structure shall be designed for the simultaneous effects due to full design earthquake load in one horizontal direction plus 30 percent of design earthquake load along the other horizontal direction. Thus, structure should be designed for the following sets of combinations of earthquake effects:

a) $\pm EL_X \pm 0.3\ EL_Y$, and

b) $\pm 0.3\ EL_X \pm EL_Y$,

where X and Y are two orthogonal horizontal plan directions. Thus, EL in the load combinations shall be replaced by ($EL_X \pm 0.3\ EL_Y$) or ($EL_Y \pm 0.3\ EL_X$). Hence, the sets of load combinations to be considered shall be as given below:

1) $1.2\ [DL + IL \pm (EL_X \pm 0.3\ EL_Y)]$ and
$1.2\ [DL + IL \pm (EL_Y \pm 0.3\ EL_X)]$;

2) $1.5\ [DL \pm (EL_X \pm 0.3\ EL_Y)]$ and
$1.5\ [DL \pm (EL_Y \pm 0.3\ EL_X)]$; and

3) $0.9\ DL \pm 1.5\ (EL_X \pm 0.3\ EL_Y)$ and
$0.9\ DL \pm 1.5\ (EL_Y \pm 0.3\ EL_X)$.

5.3.3.3 *Design vertical earthquake effects*

5.3.3.3.1 Effects due to vertical earthquake shaking shall be considered when any of the following conditions apply:

a) Structure is located in Seismic Zone IV or V;

b) Structure has vertical or plan irregularities;

c) Structure is rested on soft soil;

d) Bridges;

e) Structure has long spans; or

f) Structure has large horizontal overhangs of structural members or sub-systems.

5.3.3.3.2 When effects due to vertical earthquake shaking are to be considered, the design vertical force shall be calculated for vertical ground motion as detailed in **5.3.4.6**.

5.3.3.3.3 Where both horizontal and vertical seismic

forces are taken into account, load combination specified in **5.3.3.4** shall be considered.

5.3.3.4 *Combinations to account for three directional earthquake ground shaking*

5.3.3.4.1 When responses from the three earthquake components are to be considered, the responses due to each component may be combined using the assumption that when the maximum response from one component occurs, the responses from the other two components are 30 percent each of their maximum. All possible combinations of three components (EL_X, EL_Y and EL_Z) including variations in sign (plus or minus) shall be considered. Thus, the structure should be designed for the following sets of combinations of earthquake load effects:

a) $\pm EL_X \pm 0.3\ EL_Y \pm 0.3\ EL_Z$,

b) $\pm EL_Y \pm 0.3\ EL_Z \pm 0.3\ EL_X$, and

c) $\pm EL_Z \pm 0.3\ EL_X \pm 0.3\ EL_Y$,

where X and Y are orthogonal plan directions and Z vertical direction. Thus, EL in the above referred load combinations shall be replaced by ($EL_X \pm 0.3\ EL_Y \pm 0.3\ EL_Z$), ($EL_Y \pm 0.3\ EL_Z \pm 0.3\ EL_X$) or ($EL_Z \pm 0.3\ EL_X \pm 0.3\ EL_Y$,). This implies that the sets of load combinations involving earthquake effects to be considered shall be as given below:

1) $1.2\,[\mathrm{DL} + \mathrm{IL} \pm (EL_X \pm 0.3\ EL_Y \pm 0.3\ EL_Z)]$ and
   $1.2\,[\mathrm{DL} + \mathrm{IL} \pm (EL_Y \pm 0.3\ EL_X \pm 0.3\ EL_Z)]$;
2) $1.5\,[\mathrm{DL} \pm (EL_X \pm 0.3\ EL_Y \pm 0.3\ EL_Z)]$ and
   $1.5\,[\mathrm{DL} \pm (EL_Y \pm 0.3\ EL_X \pm 0.3\ EL_Z)]$; and
3) $0.9\,\mathrm{DL} \pm 1.5\,(EL_X \pm 0.3\ EL_Y \pm 0.3\ EL_Z)$ and
   $0.9\,\mathrm{DL} \pm 1.5\,(EL_Y \pm 0.3\ EL_X \pm 0.3\ EL_Z)$.

5.3.3.4.2 As an alternative to the procedure in **5.3.3.4.1**, the net response (EL) due to the combined effect of the three components can be obtained by:

$$EL = \sqrt{(EL_X)^2 + (EL_Y)^2 + (EL_Z)^2}$$

Caution may be exercised on loss of sign especially of the axial force, shear force and bending moment quantities, when this procedure is used; it can lead to grossly uneconomical design of structures.

5.3.3.4.3 Procedure for combining shaking effects given by **5.3.3.4.1** and **5.3.3.4.2** apply to the same response quantity (say, bending moment in a column about its major axis, or storey shear force in a frame) due to different components of the ground motion.

5.3.3.4.4 When components corresponding to only two ground motion components (say one horizontal and one vertical, or only two horizontal) are combined, the equations in **5.3.3.4.1** and **5.3.3.4.2** should be modified by deleting the term representing the response due to the component of motion not being considered.

5.3.3.5 *Increase in net pressure on soils in design of foundations*

5.3.3.5.1 In the design of foundations, unfactored loads shall be combined in line with good practices [6-1(14)], while assessing the bearing pressure in soils.

5.3.3.5.2 When earthquake forces are included, net bearing pressure in soils can be increased as per Table 40, depending on type of foundation and type of soil. For determining the type of soil for this purpose, soils shall be classified in four types as given in Table 41. In soft soils, no increase shall be applied in bearing pressure, because settlements cannot be restricted by increasing bearing pressure.

5.3.3.5.3 In soil deposits consisting of submerged loose sands and soils falling under classification SP with corrected standard penetration test values N, less than 15 in Seismic Zones III, IV and V, and less than 10 in Seismic Zone II, the shaking caused by earthquake ground motion may cause liquefaction or excessive total and differential settlements. Such sites should be avoided preferably for locating new structures, and should be avoided for locating structures of important projects. Otherwise, settlements need to be investigated, and appropriate methods adopted of compaction or stabilization to achieve N values indicated in Note 4 of Table 40. Alternatively, deep pile foundations may be adopted and anchored at depths well below the underlying soil layers, which are likely to liquefy or undergo excessive settlements.

Also, marine clay layers and other sensitive clay layers are known to liquefy, undergo excessive settlements or even collapse, owing to low shear strength of the said soil; such soils will need special treatment according to site condition (*see* Table 41).

A simplified method is given in Annex J, for evaluation of liquefaction potential.

5.3.4 *Design Acceleration Spectrum*

5.3.4.1 For the purpose of determining design seismic force, the country is classified into four seismic zones as shown in Fig. 11.

Table 40 Percentage Increase in Net Bearing Pressure and Skin Friction of Soils

(*Clause* 5.3.3.5.2)

Sl No.	Soil Type	Percentage Increase Allowable
(1)	(2)	(3)
i)	*Type A:* Rock or hard soils	50
ii)	*Type B:* Medium or stiff soils	25
iii)	*Type C:* Soft soils	0

NOTES

1 The net bearing pressure shall be determined in accordance with good practice [6-1(15)] or accepted standards [6-1(16)]

2 Only corrected values of *N* shall be used.

3 If any increase in net bearing pressure has already been permitted for forces other than seismic forces, the total increase in allowable bearing pressure, when seismic force is also included, shall not exceed the limits specified above.

4 The desirable minimum corrected field values of *N* shall be as specified below:

Seismic Zone	*Depth* (m) *below Ground Level*	*N Values*	*Remarks*
III, IV and V	≤ 5 ≥ 10	15 25	For values of depths between 5 m and 10 m, linear interpolation is recommended
II	≤ 5 ≥ 10	10 20	

If soils of lower *N* values are encountered than those specified in the table above, then suitable ground improvement techniques shall be adopted to achieve these values. Alternately, deep pile foundations should be used, which are anchored in stronger strata, underlying the soil layers that do not meet the requirement.

5 Piles should be designed for lateral loads neglecting lateral resistance of those soil layers (if any), which are liable to liquefy.

6 Accepted standard [6-1(17)] may be referred for soil notation, and corrected *N* values shall be determined by applying correction factor C_N for effective overburden pressure σ'_{vo} using relation $N = C_N N_1$, where $C_N = \sqrt{P_a / \sigma'_{vo}} \leq 1.7$, P_a is the atmospheric pressure, and N_1 is the uncorrected SPT value for soil.

7 While using this table, the value of *N* to be considered shall be determined as below:

a) *Isolated footings* — Weighted average of *N* of soil layers from depth of founding, to depth of founding plus twice the breadth of footing;

b) *Raft foundations* — Weighted average of *N* of soil layers from depth of founding, to depth of founding plus twice the breadth of raft;

c) *Pile foundation* — Weighted average of *N* of soil layers from depth of bottom tip of pile, to depth of bottom tip of pile plus twice the diameter of pile;

d) *Group pile foundation* — Weighted average of *N* of soil layers from depth of bottom tip of pile group, to depth of bottom tip of pile group plus twice the width of pile group; and

e) *Well foundation* — Weighted average of *N* of soil layers from depth of bottom tip of well, to depth of bottom tip of well plus twice the width of well.

Table 41 Classification of Types of Soils for Determining Percentage Increase in Net Bearing Pressure and Skin Friction

(*Clause* 5.3.3.5.2)

Sl No.	Soil Type	Remarks
(1)	(2)	(3)
i)	**Type A** Rock or hard soils	Well graded gravel (GW) or well graded sand (SW) both with less than 5 percent passing 75 μm sieve (Fines) Well graded gravel – sand mixtures with or without fines (GW-SW) Poorly-graded sand (SP) or Clayey sand (SC), all having *N* above 30 stiff to hard clays having *N* above 30, where *N* is corrected standard penetration test value
ii)	**Type B** Medium or stiff soils	Poorly graded sands or poorly graded sands with gravel (SP) with little or no fines having *N* between 10 and 30 Stiff to medium stiff fine-grained soils, like silts of low compressibility (ML) or clays of low compressibility (CL) having *N* between 10 and 30
iii)	**Type C** Soft soils	All soft soils other than SP with *N*<10. The various possible soils are: a) Silts of intermediate compressibility (MI); b) Silts of high compressibility (MH); c) Clays of intermediate compressibility (CI); d) Clays of high compressibility (CH); e) Silts and clays of intermediate to high compressibility (MI-MH or CI-CH); f) Silt with clay of intermediate compressibility (MI-CI); and g) Silt with clay of high compressibility (MH-CH).
iv)	**Type D** Unstable, collapsible, liquefiable soils	Requires site-specific study and special treatment according to site condition (*see* **5.3.3.5.3**)

Bearing Pressure and Skin Friction of Soils
se 5.3.3.5.2)

	Percentage Increase Allowable (3)
	50 25 0

ce with good practice [6-1(15)] or accepted standards [6-1(16)]

permitted for forces other than seismic forces, the total increase in allowable
not exceed the limits specified above.
be as specified below:

	N Values	*Remarks*
	15 25	For values of depths between 5 m and 10 m, linear interpolation is recommended
	10 20	

ified in the table above, then suitable ground improvement techniques shall be
oundations should be used, which are anchored in stronger strata, underlying

teral resistance of those soil layers (if any), which are liable to liquefy.
notation, and corrected N values shall be determined by applying correction
elation $N=C_N N_1$, where $C_N = \sqrt{P_a/\sigma'_{vo}} \leq 1.7$, P_a is the atmospheric pressure,

l shall be determined as below:
il layers from depth of founding, to depth of founding plus twice the breadth

il layers from depth of founding, to depth of founding plus twice the breadth

il layers from depth of bottom tip of pile, to depth of bottom tip of pile plus

N of soil layers from depth of bottom tip of pile group, to depth of bottom tip
; and
oil layers from depth of bottom tip of well, to depth of bottom tip of well plus

f Soils for Determining Percentage Increase in Net
ressure and Skin Friction
Clause 5.3.3.5.2)

Remarks (3)
(GW) or well graded sand (SW) both with less than 5 percent passing 75 µm
– sand mixtures with or without fines (GW-SW)
(SP) or Clayey sand (SC), all having N above 30
aving N above 30, where N is corrected standard penetration test value
or poorly graded sands with gravel (SP) with little or no fines having N
fine-grained soils, like silts of low compressibility (ML) or clays of low having N between 10 and 30
an SP with N<10. The various possible soils are:
diate compressibility (MI);
pressibility (MH);
diate compressibility (CI);
npressibility (CH);
intermediate to high compressibility (MI-MH or CI-CH);
ntermediate compressibility (MI-CI); and
igh compressibility (MH-CH).
study and special treatment according to site condition (*see* **5.3.3.5.3**)

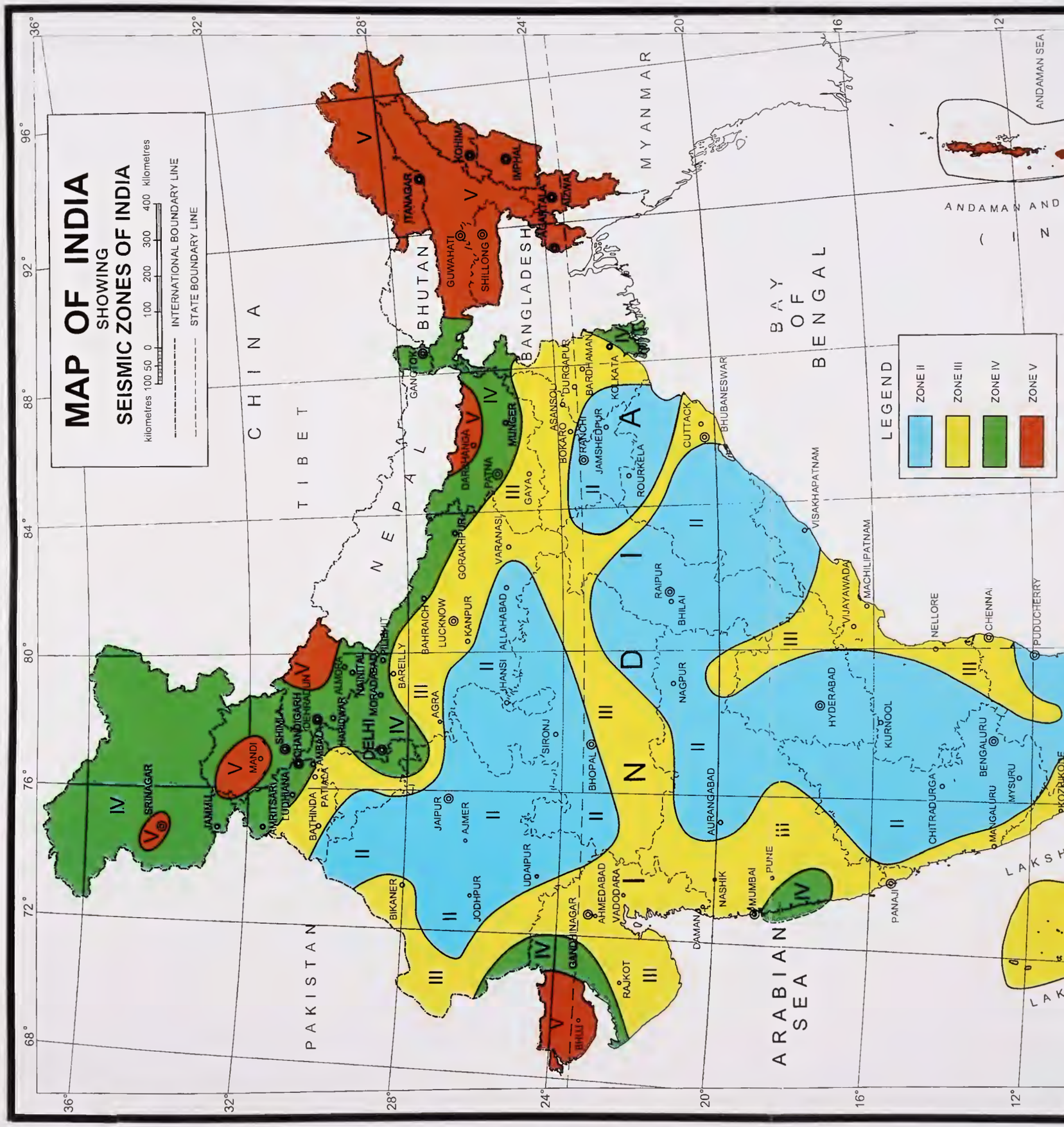

5.3.4.2 The design horizontal seismic coefficient A_h for a structure shall be determined by:

$$A_h = \frac{\left(\frac{Z}{2}\right)\left(\frac{S_a}{g}\right)}{\left(\frac{R}{I}\right)}$$

where

Z = seismic zone factor given in Table 42. Zone factor for some important towns are given at Annex K;

I = importance factor given in good practice [6-1(18)] for the corresponding structures; when not specified, the minimum values of I shall be,

a) 1.5 for critical and lifeline structures;

b) 1.2 for business continuity structures; and

c) 1.0 for the rest.

R = response reduction factor given in good practice [6-1(18)] for the corresponding structures; and

$\left(\frac{S_a}{g}\right)$ = design acceleration coefficient for different soil types, normalized with peak ground acceleration, corresponding to natural period T of structure (considering soil-structure interaction, if required). It shall be as given in good practice [6-1(18)] for the corresponding structures; when not specified, it shall be taken as that corresponding to 5 percent damping, given by expressions below:

a) *For use in equivalent static method* (*see* Fig. 12A):

$$\frac{S_a}{g} = \begin{cases} \text{For rocky or hard soil sites} & \begin{cases} 2.5 & 0 < T < 0.40 \text{ s} \\ \frac{1}{T} & 0.40 \text{ s} < T < 4.00 \text{ s} \\ 0.25 & T > 0.400 \text{ s} \end{cases} \\ \text{For medium stiff soil sites} & \begin{cases} 2.5 & 0 < T < 0.55 \text{ s} \\ \frac{1.36}{T} & 0.55 \text{ s} < T < 4.00 \text{ s} \\ 0.34 & T > 0.400 \text{ s} \end{cases} \\ \text{For soft soil sites} & \begin{cases} 2.5 & 0 < T < 0.67 \text{ s} \\ \frac{1.67}{T} & 0.67 \text{ s} < T < 4.00 \text{ s} \\ 0.42 & T > 0.400 \text{ s} \end{cases} \end{cases}$$

b) *For use in response spectrum method* (*see* Fig. 12B):

$$\frac{S_a}{g} = \begin{cases} \text{For rocky or hard soil sites} & \begin{cases} 1+15T & T < 0.10\text{s} \\ 2.5 & 0.10 \text{ s} < T < 0.40 \text{ s} \\ \frac{1}{T} & 0.40 \text{ s} < T < 4.00 \text{ s} \\ 0.25 & T > 4.00\text{S} \end{cases} \\ \text{For medium stiff soil sites} & \begin{cases} 1+15T & T < 0.10 \text{ s} \\ 2.5 & 0.10 \text{ s} < T < 0.55 \text{ s} \\ \frac{1.36}{T} & 0.55 \text{ s} < T < 4.00 \text{ s} \\ 0.34 & T > 4.00\text{s} \end{cases} \\ \text{For soft soil sites} & \begin{cases} 2.5 & 0.10 \text{ s} < T < 0.67 \text{ s} \\ \frac{1.67}{T} & 0.67 \text{ s} < T < 4.00 \text{ s} \\ 0.25 & T > 0.400 \text{ s} \end{cases} \end{cases}$$

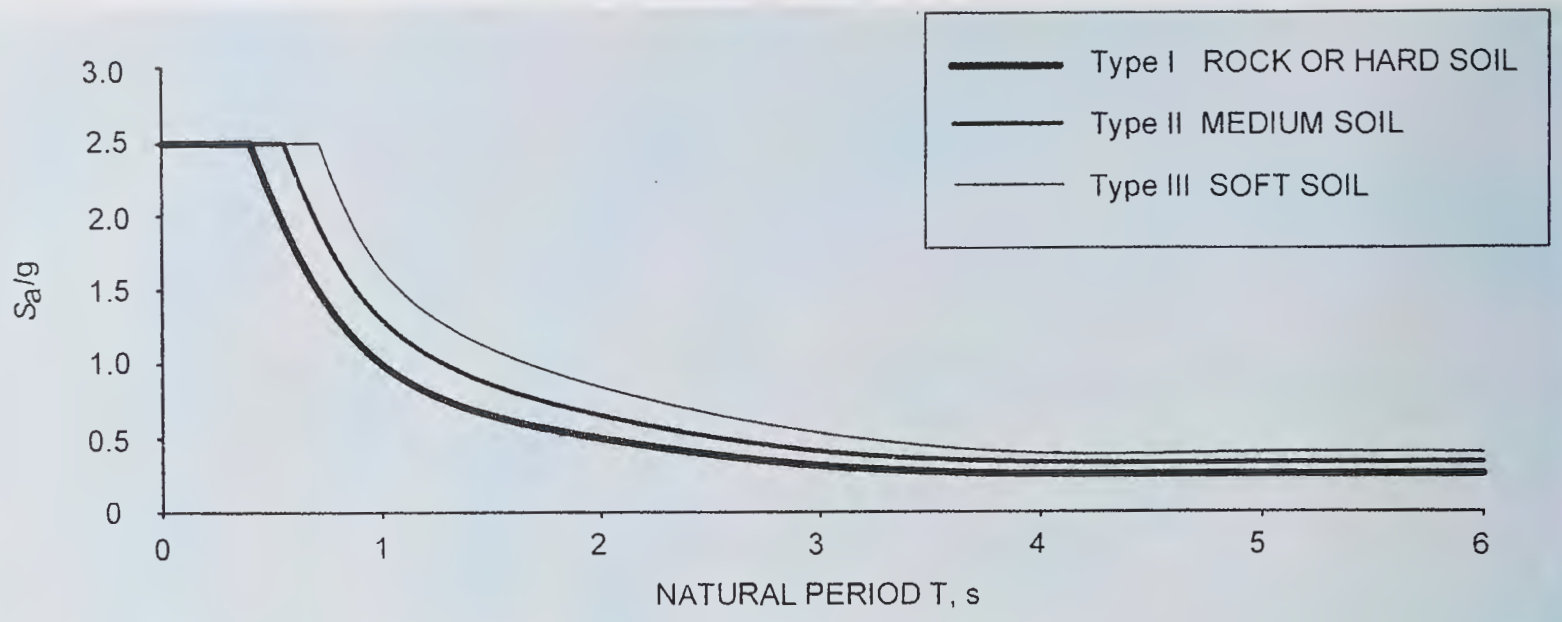

12A SPECTRA FOR EQUIVALENT STATIC METHOD

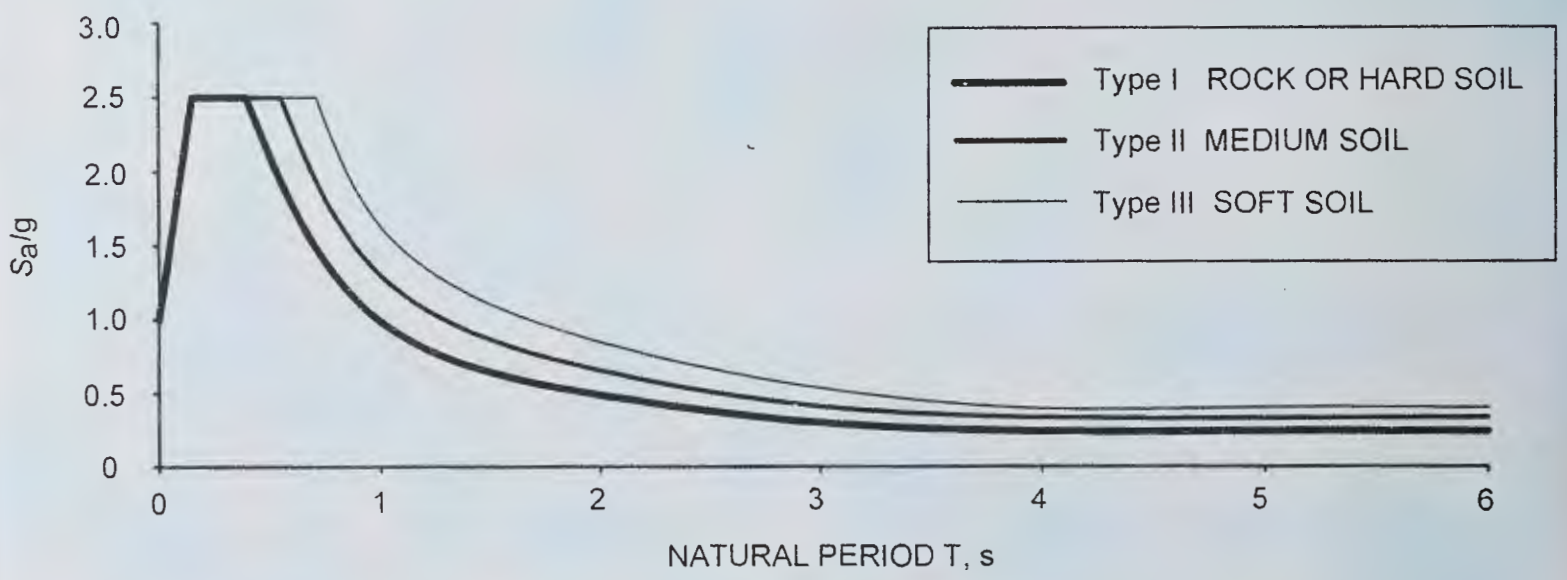

12B SPECTRA FOR RESPONSE SPECTRUM METHOD

FIG. 12 DESIGN ACCELERATION COEFFICIENT (S_a/g) (CORRESPONDING TO 5 PERCENT DAMPING)

Table 42 Seismic Zone Factor *Z*
(*Clause* 5.3.4.2)

Seismic Zone Factor	II	III	IV	V
(1)	(2)	(3)	(4)	(5)
Z	0.10	0.16	0.24	0.36

5.3.4.2.1 For determining the correct spectrum to be used in the estimate of S_a/g, the type of soil on which the structure is placed shall be identified by the classification given in Table 43, as:

a) *Soil type* I — Rock or hard soils;
b) *Soil type* II — Medium or stiff soils; and
c) *Soil type* III — Soft soils.

In Table 43, the value of *N* to be used shall be the weighted average of *N* of soil layers from the existing ground level, to 30 m below the existing ground level; here, the *N* values of individual layers shall be the corrected values.

5.3.4.3 Effects of design earthquake loads applied on structures can be considered in two ways, namely:

a) Equivalent static method, and
b) Dynamic analysis method.

In turn, dynamic analysis can be performed in three ways, namely:

1) Response spectrum method,
2) Modal time history method, and
3) Time history method.

In this Section, equivalent static method, response spectrum method and time history method are adopted. Equivalent static method may be used for analysis of regular structures with approximate natural period T_a less than 0.4 s.

5.3.4.3.1 For structural analysis, the moment of inertia shall be taken as:

a) In RC and masonry structures: 70 percent of I_{gross} of columns, and 35 percent of I_{gross} of beams; and
b) In steel structures: I_{gross} of both beams and columns.

5.3.4.4 Where a number of modes are to be considered in response spectrum method, A_h as defined in **5.3.4.2** for each mode *k* shall be determined using natural period T_k of oscillation of that mode.

Table 43 Classification of Types of Soils for Determining the Spectrum to be Used to Estimate Design Earthquake Force
(*Clause* 5.3.4.2.1)

Sl No.	Soil Type	Remarks
(1)	(2)	(3)
i)	**I** Rock or Hard soils	a) Well graded gravel (GW) or well graded sand (SW) both with less than 5 percent passing 75 μm sieve (Fines) b) Well graded gravel-sand mixtures with or without fines (GW-SW) c) Poorly graded sand (SP) or clayey sand (SC), all having *N* above 30 d) Stiff to hard clays having *N* above 30, where *N* is standard penetration test value
ii)	**II** Medium or Stiff soils	a) Poorly graded sands or poorly graded sands with gravel (SP) with little or no fines having *N* between 10 and 30 b) Stiff to medium stiff fine-grained soils, like silts of low compressibility (ML) or clays of low compressibility (CL) having *N* between 10 and 30
iii)	**III** Soft soils	All soft soils other than SP with *N*<10. The various possible soils are: a) Silts of intermediate compressibility (Ml) b) Silts of high compressibility (MH); c) Clays of intermediate compressibility (CI) d) Clays of high compressibility (CH); e) Silts and clays of intermediate to high compressibility (MI-MH or CI-CH) d) Silt with clay of intermediate compressibility (MI-CI) g) Silt with clay of high compressibility (MH-CH).

5.3.4.5 For underground structures and buildings whose base is located at depths of 30 m or more, A_h at the base shall be taken as half the value obtained from **5.3.4.2**. This reduced value shall be used only for estimating inertia effects due to masses at the corresponding levels below the ground; the inertia effects for the above ground portion of the building shall be estimated based on the unreduced value of A_h. For estimating inertia effects due to masses of structures and foundations placed between the ground level and 30 m depth, the design horizontal acceleration spectrum value shall be linearly interpolated between A_h and 0.5 A_h where A_h is as specified in **5.3.4.2**.

5.3.4.6 The design seismic acceleration spectral value A_v for vertical motions shall be taken as:

$$A_v = \begin{cases} \dfrac{\left(\frac{2}{3}\times\frac{Z}{2}\right)(2.5)}{\left(\frac{R}{I}\right)} & \text{For buildings governed by IS 1893 (Part 1)} \\[2ex] \dfrac{\left(\frac{2}{3}\times\frac{Z}{2}\right)(2.5)}{\left(\frac{R}{I}\right)} & \text{For liquid retaining tanks governed by IS 1893 (Part 2)} \\[2ex] \dfrac{\left(\frac{2}{3}\times\frac{Z}{2}\right)\left(\frac{S_a}{g}\right)}{\left(\frac{R}{I}\right)} & \text{For bridges governed by IS 1893 (Part 3)} \\[2ex] \dfrac{\left(\frac{2}{3}\times\frac{Z}{2}\right)\left(\frac{S_a}{g}\right)}{\left(\frac{R}{I}\right)} & \text{For industrial structures governed by IS 1893 (Part 4)} \end{cases}$$

The value of S_a/g shall be based on natural period T corresponding to the first vertical mode of oscillation, using **5.3.4.2**.

5.3.4.7 When design acceleration spectrum is developed specific to a project site, the same may be used for design of structures of the project. In such cases, effects of the site-specific spectrum shall not be less than those arising out of the design spectrum specified in this Section.

5.4 Buildings

The four main desirable attributes of an earthquake resistant building are:

a) Robust structural configuration,
b) At least a minimum elastic lateral stiffness,
c) At least a minimum lateral strength, and
d) Adequate ductility.

5.4.1 *Regular and Irregular Configurations*

Buildings with simple regular geometry and uniformly distributed mass and stiffness in plan and in elevation, suffer much less damage, than buildings with irregular configurations. All efforts shall be made to eliminate irregularities by modifying architectural planning and structural configurations. A building shall be considered to be irregular for the purpose of this Section, even if any one of the conditions given in Tables 44 and 45 is applicable. Limits on irregularities for Seismic Zones III, IV and V and special requirements are laid out in Tables 44 and 45.

Table 44 Definitions of Irregular Buildings — Plan Irregularities (*see* Fig. 13)

(*Clause* 5.4.1)

Sl No.	Type of Plan Irregularity
(1)	(2)

i) **Torsional Irregularity**

Usually, a well-proportioned building does not twist about its vertical axis, when

a) the stiffness distribution of the vertical elements resisting lateral loads is balanced in plan according to the distribution of mass in plan (at each storey level); and

b) the floor slabs are stiff in their own plane (this happens when its plan aspect ratio is less than 3)

A building is said to be torsionally irregular, when,

1) the maximum horizontal displacement of any floor in the direction of the lateral force at one end of the floor is more than 1.5 times its minimum horizontal displacement at the far end of the same floor in that direction; and

2) the natural period corresponding to the fundamental torsional mode of oscillation is more than those of the first two translational modes of oscillation along each principal plan directions

In torsionally irregular buildings, when the ratio of maximum horizontal displacement at one end and the minimum horizontal displacement at the other end is,

i) *in the range 1.5 – 2.0, (a) the building configuration shall be revised to ensure that the natural period of the fundamental torsional mode of oscillation shall be smaller than those of the first two translational modes along each of the principal plan directions, and then (b) three dimensional dynamic analysis method shall be adopted; and*

ii) *more than 2.0, the building configuration shall be revised*

ii) **Re-entrant Corners**

A building is said to have a re-entrant corner in any plan direction, when its structural configuration in plan has a projection of size greater than 15 percent of its overall plan dimension in that direction

In buildings with re-entrant corners, three-dimensional dynamic analysis method shall be adopted

iii) **Floor Slabs having Excessive Cut-Outs or Openings**

Openings in slabs result in flexible diaphragm behaviour, and hence the lateral shear force is not shared by the frames and/or vertical members in proportion to their lateral translational stiffness. The problem is particularly accentuated when the opening is close to the edge of the slab. A building is said to have discontinuity in their in-plane stiffness, when floor slabs have cut-outs or openings of area more than 50 percent of the full area of the floor slab

In buildings with discontinuity in their in-plane stiffness, if the area of the geometric cut-out is,

a) *less than or equal to 50 percent, the floor slab shall be taken as rigid or flexible depending on the location of and size of openings; and*

b) *more than 50 percent, the floor slab shall be taken as flexible*

iv) **Out-of-Plane Offsets in Vertical Elements**

Out-of-plane offsets in vertical elements resisting lateral loads cause discontinuities and detours in the load path, which is

Table 44 — (*Concluded*)

known to be detrimental to the earthquake safety of the building. A building is said to have out-of-plane offset in vertical elements. when structural walls or frames are moved out of plane in any storey along the height of the building

In a building with out-of-plane offsets in vertical elements,

a) specialist literature shall be referred for design of such a building, if the building is located in Seismic Zone II; and

b) the following two conditions shall be satisfied, if the building is located in Seismic Zones III, IV and V:

1) *Lateral drift shall be less than 0.2 percent in the storey having the offset and in the storeys below; and*

2) *Specialist literature shall be referred for removing the irregularity arising due to out-of-plane offsets in vertical elements.*

v) **Non-Parallel Lateral Force System**

Buildings undergo complex earthquake behaviour and hence damage, when they do not have lateral force resisting systems oriented along two plan directions that are orthogonal to each other. A building is said to have non-parallel system when the vertically oriented structural systems resisting lateral forces are not oriented along the two principal orthogonal axes in plan

Buildings with non-parallel lateral force resisting system shall be analysed for load combinations mentioned in **5.3.3.2.2** or **5.3.3.4.1**.

Table 45 Definition of Irregular Buildings — Vertical Irregularities (*see* Fig. 14)

(*Clause* 5.4.1)

Sl No.	Type of Plan Irregularity
(1)	(2)

i) **Stiffness Irregularity (Soft Storey)**

A soft storey is a storey whose lateral stiffness is less than that of the storey above.

The structural plan density (SPD) shall be estimated when unreinforced masonry infills are used. When SPD of masonry infills exceeds 20 percent, the effect of URM infills shall be considered by explicitly modelling the same in structural analysis (as per **5.4.9***). The design forces for RC members shall be larger of that obtained from analysis of:*

a) Bare frame, and

b) Frames with URM infills,

using 3D modelling of the structure. In buildings designed considering URM infills, the inter-storey drift shall be limited to 0.2 percent in the storey with stiffening and also in all storeys below.

ii) **Mass Irregularity**

Mass irregularity shall be considered to exist, when the seismic weight *(as per* **5.4.7***)* of any floor is more than 150 percent of that of the floors below.

In buildings with mass irregularity and located in Seismic Zones III, IV and V, the earthquake effects shall be estimated by Dynamic Analysis Method (as per **5.4.7***).*

iii) **Vertical Geometric Irregularity**

Vertical geometric irregularity shall be considered to exist, when the horizontal dimension of the lateral force resisting

Table 45 — (*Contined*)

(1)	(2)
	system in any storey is more than 125 percent of the storey below. *In buildings with vertical geometric irregularity and located in Seismic Zones III, IV and V, the earthquake effects shall be estimated by Dynamic Analysis Method (as per* **5.4.7***).*
iv)	**In-Plane Discontinuity in Vertical Elements Resisting Lateral Force** In-plane discontinuity in vertical elements which are resisting lateral force shall be considered to exist, when in-plane offset of the lateral force resisting elements is greater than 20 percent of the plan length of those elements. In buildings with in-plane discontinuity and located in Seismic Zones II, the lateral drift of the building under the design lateral force shall be limited to 0.2 percent of the building height; in Seismic Zones III, IV and V, buildings with in-plane discontinuity shall not be permitted.
v)	**Strength Irregularity (Weak Storey)** A weak storey is a storey whose lateral strength is less than that of the storey above. *In such a case, buildings in Seismic Zones III, IV and V shall be designed such that safety of the building is not jeopardized; also, provisions of* **5.4.10** *shall be followed.*
vi)	**Floating or Stub Columns** Such columns are likely to cause concentrated damage in the structure.

Table 45 — (*Concluded*)

(1)	(2)
	This feature is undesirable, and hence should be prohibited, if it is part of or supporting the primary lateral load resisting system.
vii)	**Irregular Modes of Oscillation in Two Principal Plan Directions** Stiffnesses of beams, columns, braces and structural walls determine the lateral stiffness of a building in each principal plan direction. A building is said to have lateral storey irregularity in a principal plan direction, if a) the first three modes contribute less than 65 percent mass participation factor in each principal plan direction, and b) the fundamental lateral natural periods of the building in the two principal plan directions are closer to each other by 10 percent of the larger value. *In buildings located in Seismic Zones II and III, it shall be ensured that the first three modes together contribute at least 65 percent mass participation factor in each principal plan direction. And, in buildings located in Seismic Zones IV and V, it shall be ensured that,* 1) the first three modes together contribute at least 65 percent mass participation factor in each principal plan direction, and 2) the fundamental lateral natural periods of the building in the two principal plan directions are away from each other by at least 10 percent of the larger value.

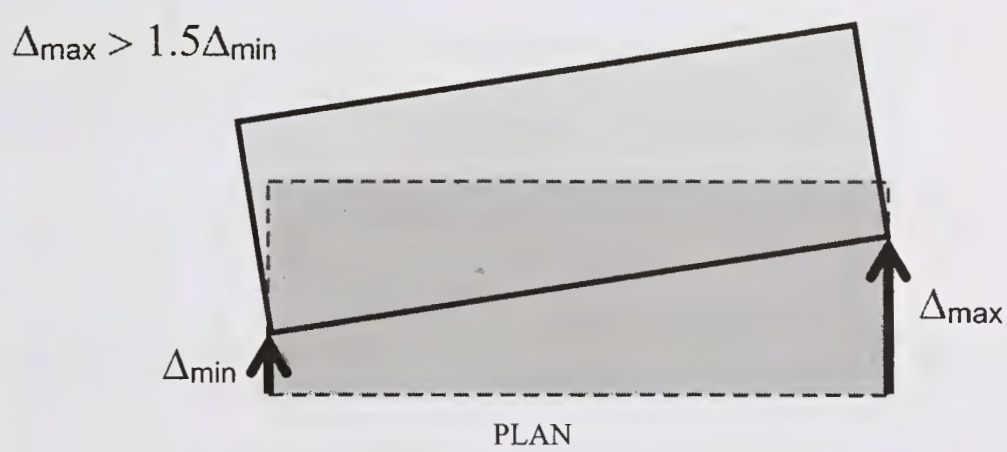

13A TORSIONAL IRREGULARITY

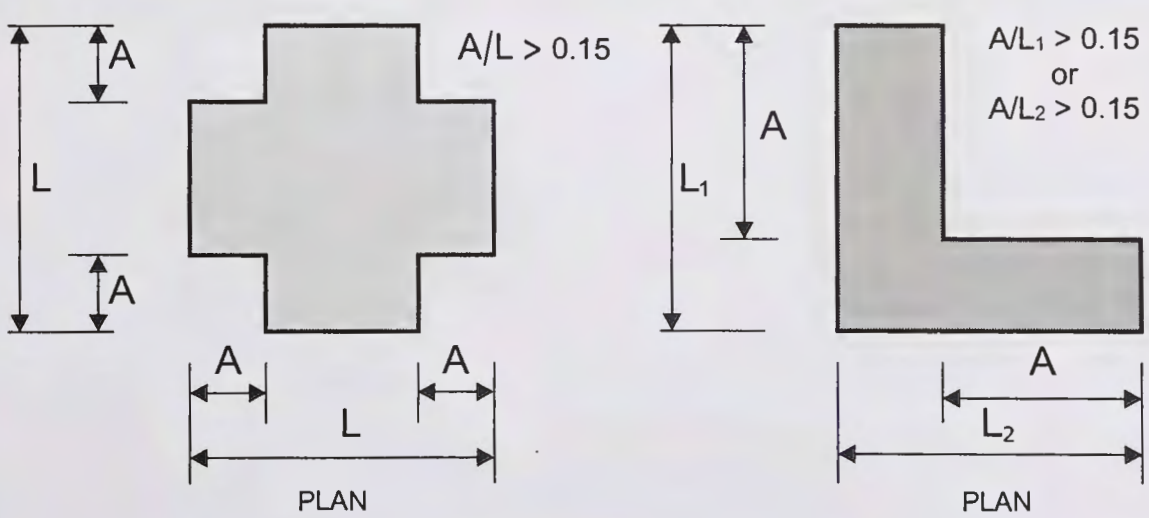

13B RE-ENTRANT CORNERS

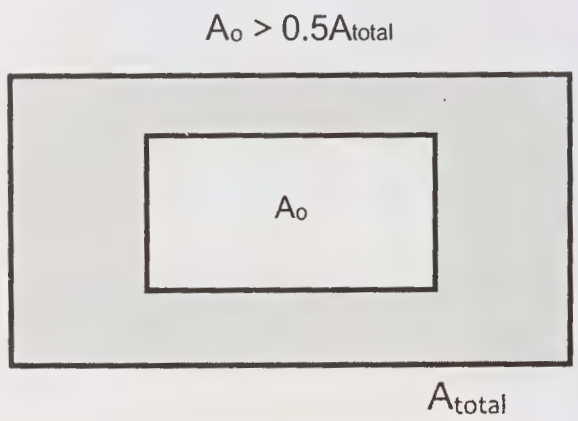

OPENING LOCATED ANYWHERE IN THE SLAB

PLAN

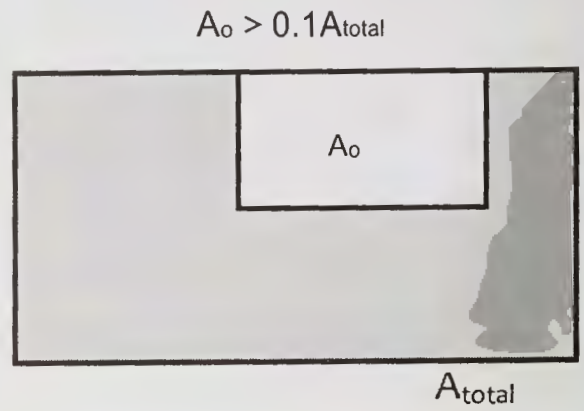

OPENING LOCATED ALONG ANY EDGE OF THE SLAB

PLAN

13C FLOOR SLABS HAVING EXCESSIVE CUT-OUT AND OPENINGS

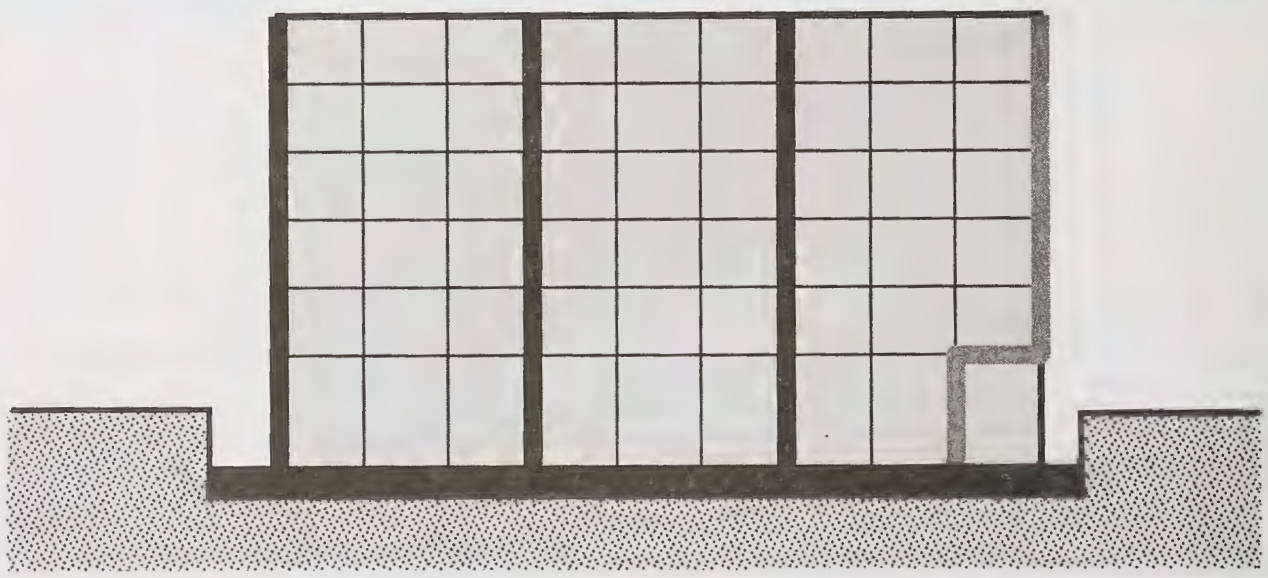

ELEVATION

13D OUT-OF-PLANE OFFSETS IN VERTICAL ELEMENTS

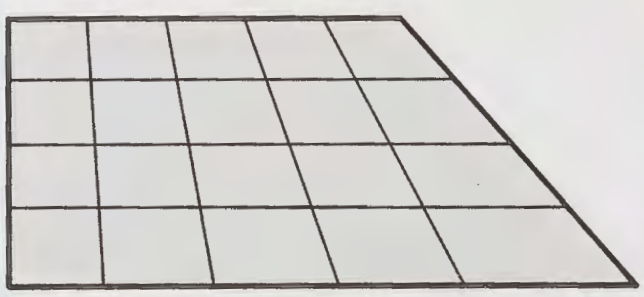

PLAN

(i)

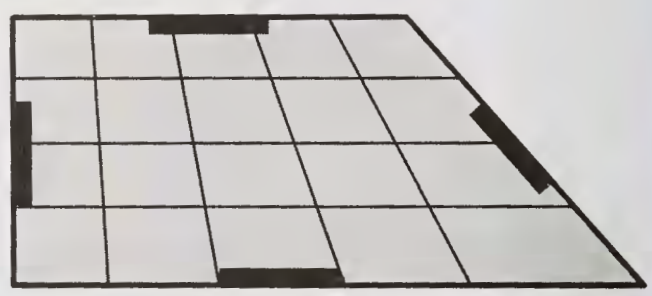

PLAN

(ii)

13E NON-PARALLEL LATERAL FORCE SYSTEM:
(i) MOMENT FRAME BUILDING, and
(ii) MOMENT FRAME BUILDING WITH STRUCTURAL WALLS

FIG. 13 DEFINITIONS OF IRREGULAR BUILDINGS — PLAN IRREGULARITIES

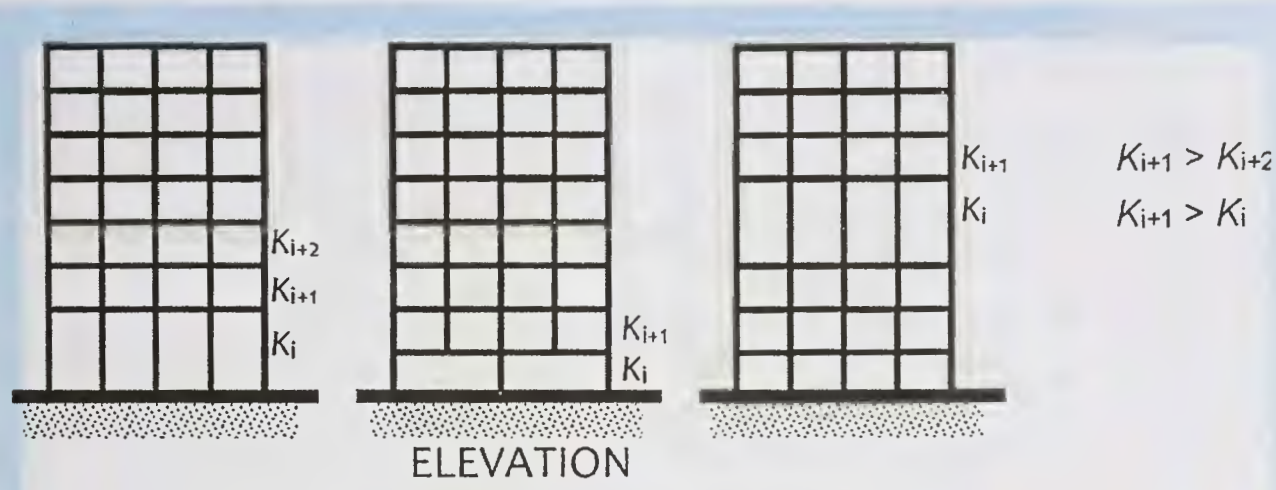

14A STIFFNESS IRREGULARITY (SOFT STOREY)

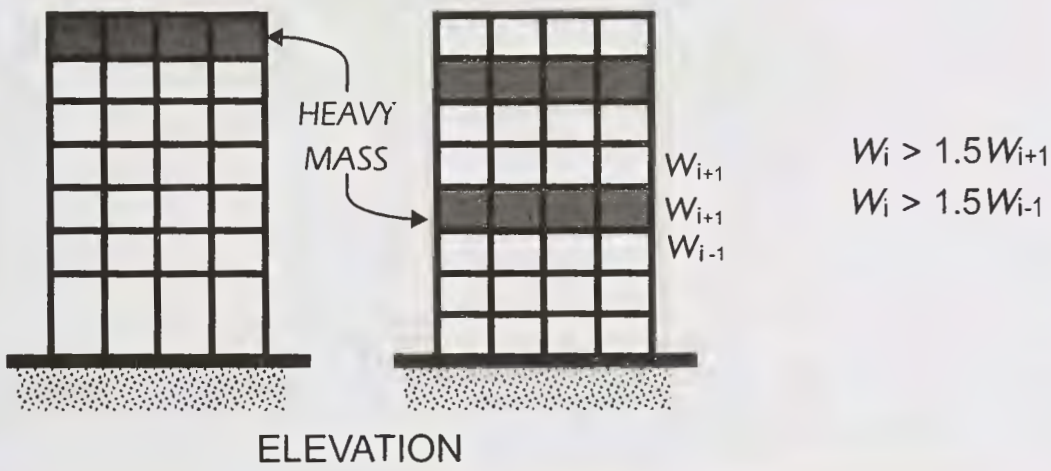

14B MASS IRREGULARITY

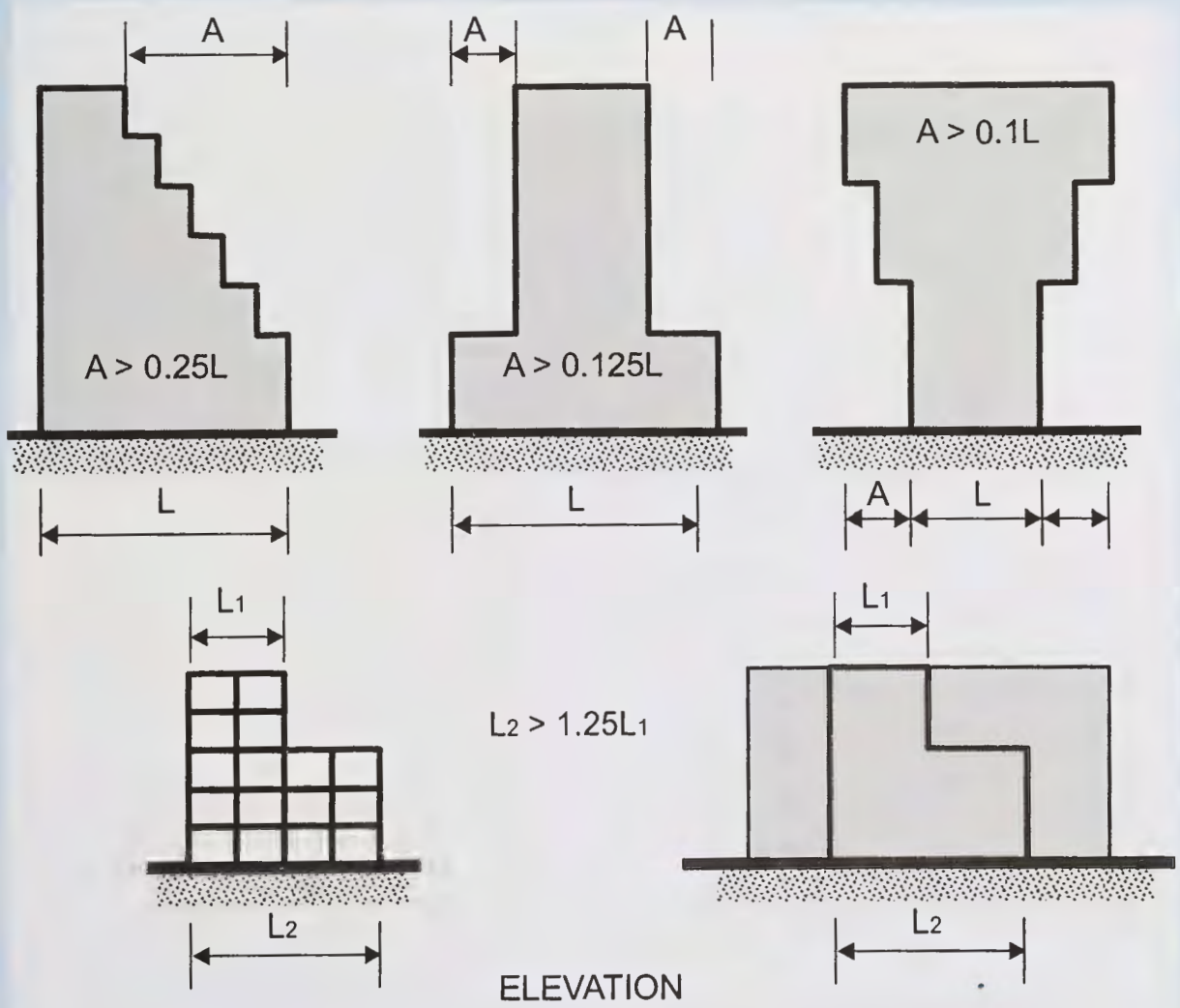

14C VERTICAL GEOMETRIC IRREGULARITY

FIG. 14 — (*Continued*)

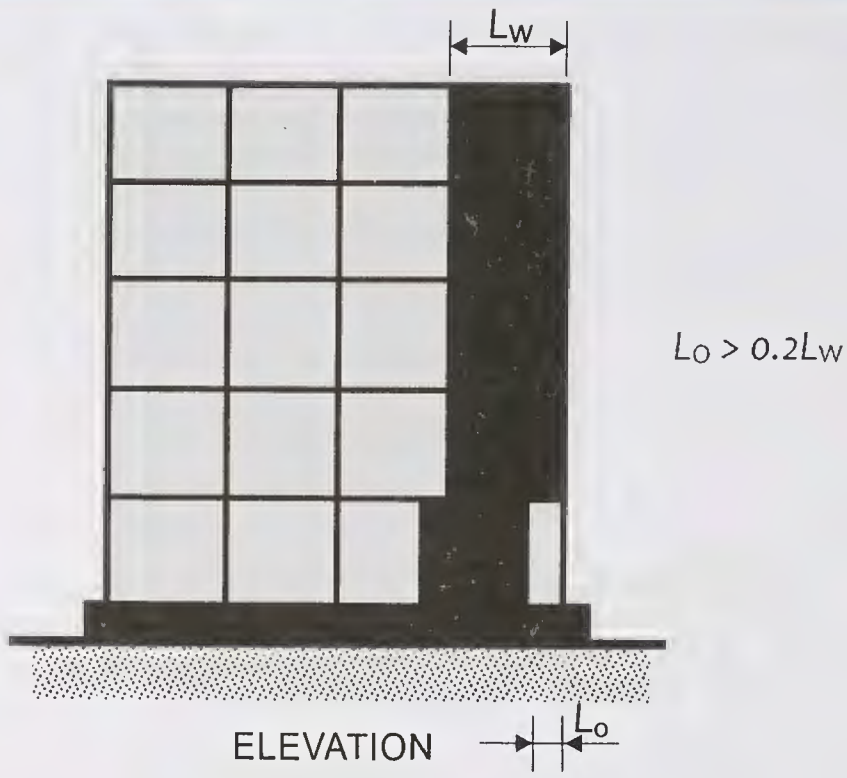

14D IN-PLANE DISCONTINUITY IN VERTICAL ELEMENTS RESISTING LATERAL FORCE

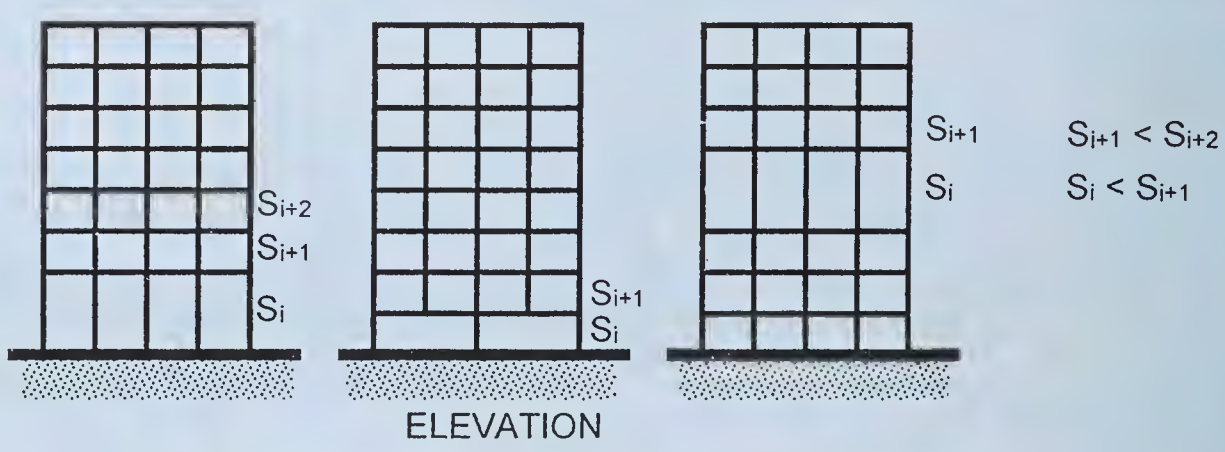

14E STRENGTH IRREGULARITY (WEAK STOREY)

FIG. 14 DEFINITIONS OF IRREGULAR BUILDINGS — VERTICAL IRREGULARITIES

5.4.2 *Lateral Force*

5.4.2.1 *Design lateral force*

Buildings shall be designed for the design lateral force V_B given by:

$$V_B = A_h W$$

where A_h shall be estimated as per **5.3.4.2**, and W as per **5.4.4**.

5.4.2.2 *Minimum design lateral force*

Buildings and portions there of shall be designed and constructed to resist at least the effects of design lateral force specified in **5.4.2.1**. But, regardless of design earthquake forces arrived at as per **5.4.3.1**, buildings shall have lateral load resisting systems capable of resisting a horizontal force not less than $(V_B)_{min}$ as given in Table 46.

Table 46 Minimum Design Earthquake Horizontal Lateral Force for Buildings
(*Clause* 5.4.2.2)

Sl No. (1)	Seismic Zone (2)	ρ percent (3)
i)	II	0.7
ii)	III	1.1
iii)	IV	1.6
iv)	V	2.4

5.4.2.3 *Importance factor (I)*

In estimating design lateral force V_B of buildings as per **5.4.2.1**, the importance factor I of buildings shall be taken as per Table 47.

Table 47 Importance Factor (*I*)
(*Clause* 5.4.2.3)

Sl No.	Structure	I
(1)	(2)	(3)
i)	Important service and community buildings or structures (for example critical governance buildings, schools). signature buildings, monument buildings. lifeline and emergency buildings (for example hospital buildings, telephone exchange buildings. television station buildings, radio station buildings. bus station buildings, metro rail buildings and metro rail station buildings). railway stations, airports, food storage buildings (such as warehouses), fuel station buildings, electric power station buildings. and fire station buildings), and large community hall buildings (for example cinema halls, shopping malls, assembly halls and subway stations) and power station buildings	1.5
ii)	Residential or commercial buildings [other than those listed in Sl No. (i)] with occupancy more than 200 persons	1.2
iii)	All other buildings	1.0

NOTES

1 Owners and design engineers of buildings or structures may choose values of importance factor *I* more than those mentioned above.

2 Buildings or structures covered under Sl No. (iii) may be designed for higher value of importance factor *I*, depending on economy and strategy.

3 In Sl No. (ii), when a building is composed of more than one structurally independent unit, the occupancy size shall be for each of the structurally independent unit of the building.

4 In buildings with mixed occupancies, wherein different *I* factors applicable for the respective occupancies, larger of the importance factor *I* values shall be used for estimating the design earthquake force of the building.

5.4.2.4 *Damping ratio*

The value of damping shall be taken as 5 percent of critical damping for the purposes of estimating A_h in the design lateral force V_B of a building as per **5.4.2.1**, irrespective of the material of construction (namely steel, reinforced concrete, masonry, or a combination thereof of these three basic materials) of its lateral load resisting system, considering that buildings experience inelastic deformations under design level earthquake effects, resulting in much higher energy dissipation than that due to initial structural damping in buildings. This value of damping shall be used, irrespective of the method of the structural analysis employed, namely Equivalent Static Method (as per **5.4.6**) or Dynamic Analysis Method (as per **5.4.7**).

5.4.2.5 *Design acceleration spectrum*

Design acceleration coefficient S_a/g corresponding to 5 percent damping for different soil types, normalized to peak ground acceleration, corresponding to natural period *T* of structure considering soil-structure interaction, irrespective of the material of construction of the structure. S_a/g shall be as given by expressions in **5.3.4.2**.

5.4.2.6 *Response reduction factor (R)*

Response reduction factor, along with damping during extreme shaking and redundancy: (a) influences the nonlinear behaviour of buildings during strong earthquake shaking, and (b) accounts for inherent system ductility, redundancy and overstrength normally available in buildings, if designed and detailed as per this Section and the associated Indian Standards.

For the purpose of design as per this Section, response reduction factor *R* for different building systems shall be as given in Table 48. The values of *R* shall be used for design of buildings with lateral load resisting elements, and NOT for just the lateral load resisting elements, which are built in isolation.

5.4.2.7 *Dual system*

Buildings with dual system consist of moment resisting frames and structural walls (or of moment resisting frames and bracings) such that both of the following conditions are valid:

a) Two systems are designed to resist total design lateral force in proportion to their lateral stiffness, considering interaction of two systems at all floor levels; and

b) Moment resisting frames are designed to resist independently at least 25 percent of the design base shear.

5.4.3 *Design Imposed Loads for Earthquake Force Calculation*

5.4.3.1 For various loading classes specified in **3**, design seismic force shall be estimated using full dead load plus percentage of imposed load as given in Table 49. The same shall be used in the three-dimensional dynamic analysis of buildings also.

5.4.3.2 For calculation of design seismic forces of buildings, imposed load on roof need not be considered. But, weights of equipment and other permanently fixed facilities should be considered; in such a case, the reductions of imposed loads mentioned in Table 49 are not applicable to that part of the load.

5.4.3.3 Imposed load values indicated in Table 49 for calculating design earthquake lateral forces are applicable to normal conditions. When loads during earthquakes are more accurately assessed, designers may alter imposed load values indicated or even replace the entire imposed load given in Table 49 with actual assessed load values, subject to the values given in Table 46 as the minimum values..Where imposed load is not assessed as per **5.4.3.1** and **5.4.3.2**,

a) only that part of imposed load, which possesses mass, shall be considered; and

b) lateral earthquake design force shall not be calculated on contribution of impact effects from imposed loads.

Table 48 Response Reduction Factor *R* for Building Systems

(*Clause* 5.4.2.6)

Sl No. (1)	Lateral Load Resisting System (2)	R
i)	**Moment Frame Systems**	
	a) RC buildings with ordinary moment resisting frame (OMRF) (*see* Note 1)	3.0
	b) RC buildings with special moment resisting frame (SMRF)	5.0
	c) Steel buildings with ordinary moment resisting frame (OMRF) (*see* Note 1)	3.0
	d) Steel buildings with special moment resisting frame (SMRF)	5.0
ii)	**Braced Frame Systems** (*see* Note 2)	
	a) Buildings with ordinary braced frame (OBF) having concentric braces	4.0
	b) Buildings with special braced frame (SBF) having concentric braces	4.5
	c) Buildings with special braced frame (SBF) having eccentric braces	5.0
iii)	**Structural Wall Systems** (*see* Note 3)	
	a) Load bearing masonry buildings	
	1) Unreinforced masonry {designed as per good practice [6-1(19)]} without horizontal RC seismic bands (*see* Note 1)	1.5
	2) Unreinforced masonry {designed as per good practice [6-1(19)]} with horizontal RC seismic bands	2.0
	3) Unreinforced masonry {designed as per good practice [6-1(19)]} with horizontal RC seismic bands and vertical reinforcing bars at corners of rooms and jambs of openings {with reinforcement as per good practice [6-1(20)]}	2.5
	4) Reinforced masonry [*see* Part 6 'Structural Design, Section 4 Masonry' of the Code]	3.0
	5) Confined masonry	3.0
	b) Buildings with ordinary RC structural walls (*see* Note 1)	3.0
	c) Buildings with ductile RC structural walls	4.0
iv)	**Dual Systems** (*see* Note 3)	
	a) Buildings with ordinary RC structural walls and RC OMRFs (*see* Note 1)	3.0
	b) Buildings with ordinary RC structural walls and RC SMRFs (*see* Note 1)	4.0
	c) Buildings with ductile RC structural walls with RC OMRFs (*see* Note 1)	4.0
	d) Buildings with ductile RC structural walls with RC SMRFs	5.0
v)	**Flat Slab – Structural Wall Systems** (*see* Note 4)	
	RC building with the three features given below:	3.0
	a) Ductile RC structural walls (which are designed to resist 100 percent of the design lateral force),	
	b) Perimeter RC SMRFs (which are designed to independently resist 25 percent of the design lateral force), and preferably	
	c) An outrigger and belt truss system connecting the core ductile RC structural walls and the perimeter RC SMRFs (*see* Note 1).	

NOTES

1 RC and steel structures in Seismic Zones III, IV and V shall be designed to be ductile. Hence, this system is not allowed in these seismic zones.

2 Eccentric braces shall be used only with SBFs.

3 Buildings with structural walls also include buildings having structural walls and moment frames, but where,

a) frames are not designed to carry design lateral loads, or

b) frames are designed to carry design lateral loads, but do not fulfill the requirements of 'dual systems'.

4 In these buildings, (a) punching shear failure shall be avoided, and (b) lateral drift at the roof under design lateral force shall not exceed 0.1 percent.

Table 49 Percentage of Imposed Load to be Considered in Calculation of Seismic Weight

(*Clauses* 5.4.3.1)

Sl No.	Imposed Uniformity Distributed Floor Loads kN/m^2	Percentage of Imposed Load
(1)	(2)	(3)
i)	Up to and including 3.0	25
ii)	Above 3.0	50

5.4.3.4 Loads other than those given above (for example snow and permanent equipment) shall be considered appropriately.

5.4.3.5 In regions of severe snow loads and sand storms exceeding intensity of 1.5 kN/m^2, 20 percent of uniform design snow load or sand load respectively, shall be included in the estimation of seismic weight. In case the minimum values of seismic weights corresponding to these load effects given in **2**, **3**, **4**, **6** and **7** are higher, the higher values shall be used.

5.4.3.6 In buildings that have interior partitions, the weight of these partitions on floors shall be included in the estimation of seismic weight; this value shall not

be less than 0.5 kN/m^2. In case the minimum values of seismic weights corresponding to partitions given in **2**, **3**, **4**, **6** and **7** are higher, the higher values shall be used. It shall be ensured that the weights of these partitions shall be considered only in estimating inertial effects of the building.

5.4.4 *Seismic Weight*

5.4.4.1 *Seismic weight of floors*

Seismic weight of each floor is its full dead load plus appropriate amount of imposed load, as specified in **5.4.3**. While computing the seismic weight of each floor, the weight of columns and walls in any storey shall be appropriately apportioned to the floors above and below the storey.

5.4.4.2 Any weight supported in between storeys shall be distributed to floors above and below in inverse proportion to its distance from the floors.

5.4.6 *Equivalent Static Method*

As per this method, first, the design base shear V_B shall be computed for the building as a whole. Then, this V_B shall be distributed to the various floor levels at the corresponding centre of mass. And, finally, this design seismic force at each floor level shall be distributed to individual lateral load resisting elements through structural analysis considering the floor diaphragm action. This method shall be applicable for regular buildings with height less than 15 m in Seismic Zone II.

5.4.6.1 The design base shear V_B along any principal direction of a building shall be determined by:

$$V_B = A_h W$$

where

A_h = design horizontal acceleration coefficient value as per **5.3.4.2**, using approximate fundamental natural period T_a as per **5.4.6.2** along the considered direction of shaking; and

W = seismic weight of the building as per **5.4.4.2**.

5.4.6.2 The approximate fundamental translational natural period T_a of oscillation, in second, shall be estimated by the following expressions:

a) Bare MRF buildings (without any masonry infills):

$$T_a = \begin{cases} 0.075h^{0.75} & \text{(for RC MRF building)} \\ 0.080h^{0.75} & \text{(for RC-Steel Composite MRF building)} \\ 0.085h^{0.75} & \text{(for steel MRF building)} \end{cases}$$

where

h = height (in m) of building (*see* Fig. 15). This excludes the basement storeys, where basement storey, walls are connected with the ground floor deck or fitted between the building columns, but includes the basement storeys, when they are not so connected.

b) Buildings with RC structural walls:

$$T_a = \frac{0.075h^{0.75}}{\sqrt{A_w}} \geq \frac{0.09h}{\sqrt{d}}$$

where A_w is total effective area (m^2) of walls in the first storey of the building given by:

$$A_w = \sum_{i=1}^{N_w} \left[A_{wi} \left\{ 0.2 + \left(\frac{L_{wi}}{h} \right)^2 \right\} \right]$$

where

h = height of building as defined in **5.4.6.2**(a), in m;

A_{wi} = effective cross-sectional area of wall i in first storey of building, in m^2;

L_{wi} = length of structural wall i in first storey in the considered direction of lateral forces, in m;

d = base dimension of the building at the plinth level along the considered direction of earthquake shaking, in m; and

N_w = number of walls in the considered direction of earthquake shaking.

The value of L_{wi}/h to be used in this equation shall not exceed 0.9.

c) All other buildings:

$$T_a = \frac{0.09h}{\sqrt{d}}$$

where

h = height of building, as defined in **5.4.6.2**(a), in m; and

d = base dimension of the building at the plinth level along the considered direction of earthquake shaking, in m.

5.4.6.3 The design base shear (V_B) computed in **5.4.6.1** shall be distributed along the height of the building and in plan at each floor level as below:

a) *Vertical distribution of base shear to different floor levels* — The design base shear V_B computed in **5.4.6.1** shall be distributed along the height of the building as per the following expression:

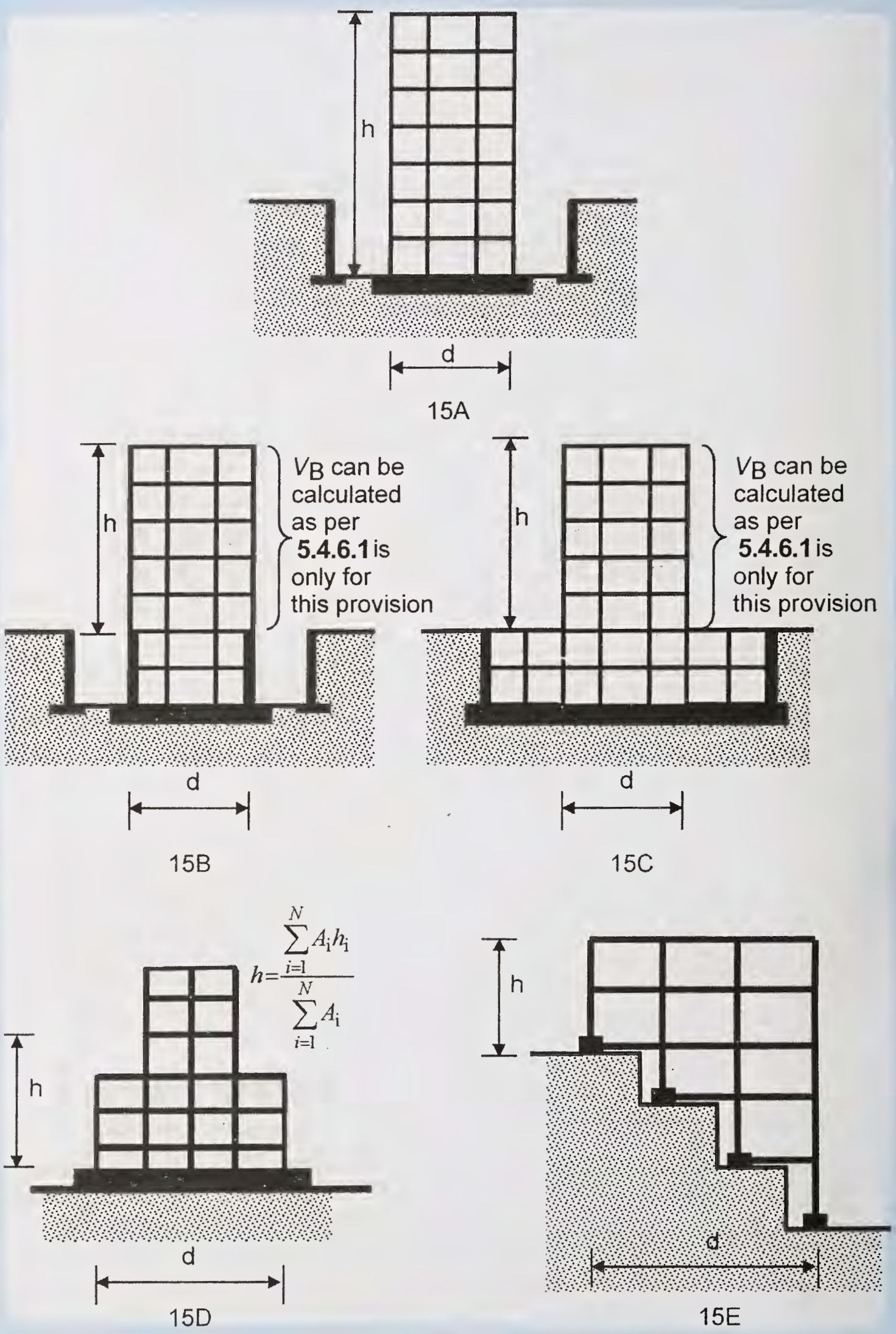

FIG. 15 DEFINITIONS OF HEIGHT AND BASE WIDTH OF BUILDINGS

$$Q_i = \left(\frac{W_i h_i^2}{\sum_{j=1}^{n} W_j h_j^2} \right) V_B ,$$

where

Q_i = design lateral force at floor i;

W_i = seismic weight of floor i;

h_i = height of floor i measured from base; and

n = number of storeys in building, that is, number of levels at which masses are located.

b) *In-plan distribution of design lateral force at floor i to different lateral force resisting elements* — The design storey shear in any storey shall be calculated by summing the design lateral forces at all floor above that storey. In buildings whose floors are capable of providing rigid horizontal diaphragm action in their own plane, the design storey shear shall be distributed to the various vertical elements of lateral force resisting system in proportion to the lateral stiffness of these vertical elements.

5.4.6.4 *Diaphragm*

In buildings whose floor diaphragms cannot provide rigid horizontal diaphragm action in their own plane, design storey shear shall be distributed to the various vertical elements of lateral force resisting system considering the in-plane flexibility of the diaphragms.

A floor diaphragm shall be considered to be flexible, if it deforms such that the maximum lateral displacement measured from the chord of the deformed shape at any point of the diaphragm is more than 1.2 times the average displacement of the entire diaphragm (*see* Fig. 16).

Usually, reinforced concrete monolithic slab-beam floors or those consisting of prefabricated or precast elements with reasonable reinforced screed concrete (at least a minimum of 50 mm on floors and of 75 mm on roof, with at least a minimum reinforcement of 6 mm bars spaced at 150 mm centres) as topping, and of plan aspect ratio less than 3, can be considered to be providing rigid diaphragm action.

5.4.7 *Dynamic Analysis Method*

5.4.7.1 Linear dynamic analysis shall be performed to obtain the design lateral force (design seismic base shear, and its distribution to different levels along the height of the building, and to various lateral load resisting elements) for all buildings, other than regular buildings lower than 15 m in Seismic Zone II.

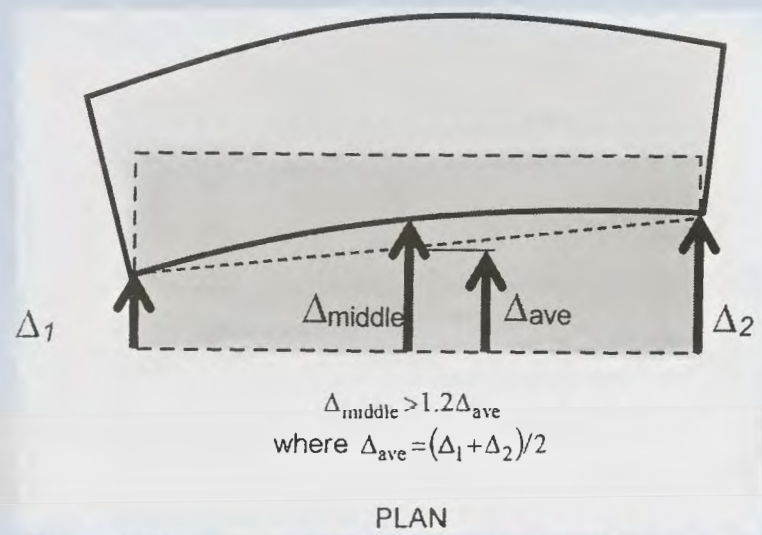

FIG. 16 DEFINITION OF FLEXIBLE FLOOR DIAPHRAGM

5.4.7.2 The analytical model for dynamic analysis of buildings with unusual configuration should be such that it adequately represents irregularities present in the building configuration.

5.4.7.3 Dynamic analysis may be performed by either the Time History Method or the Response Spectrum Method. When either of the methods is used, the design base shear V_B estimated shall not be less than the design base shear $\bar{V}_B$ calculated using a fundamental period T_a, where T_a is as per **5.4.6.2**.

When V_B is less than $\bar{V}_B$, the force response quantities (for example member stress resultants, storey shear forces, and base reactions) shall be multiplied by $\bar{V}_B/V_B$.

For earthquake shaking considered along,

a) the two mutually perpendicular plan directions X and Y, separate multiplying factors shall be calculated, namely $\bar{V}_{BX}/V_{BX}$ and $\bar{V}_{BY}/V_{BY}$, respectively; and

b) the vertical Z direction, the multiplying factor shall be taken as

Max $[\bar{V}_{BX}/V_{BX}; \bar{V}_{BY}/V_{BY}]$

5.4.7.4 *Time history method*

Time history method shall be based on an appropriate ground motion (preferably compatible with the design acceleration spectrum in the desired range of natural periods) and shall be performed using accepted principles of earthquake structural dynamics.

5.4.7.5 *Response spectrum method*

Response spectrum method may be performed for any building using the design acceleration spectrum

specified in **5.3.4.2**, or by a site-specific design acceleration spectrum mentioned in **5.3.4.7**.

5.4.7.5.1 *Natural modes of oscillation*

Undamped free vibration analysis of the entire building shall be performed as per established methods of structural dynamics using appropriate mass and elastic stiffness of the structural system, to obtain natural periods T_k and mode shapes $\{\phi\}_k$ of those of its N_m modes of oscillation $[k \in [1, N_m]]$ that need to be considered as per **5.4.7.5.2**.

5.4.7.5.2 *Number of modes to be considered*

The number of modes N_m to be used in the analysis for earthquake shaking along a considered direction, should be such that the sum total of modal masses of these modes considered is at least 90 percent of the total seismic mass.

If modes with natural frequencies beyond 33 Hz are to be considered, the modal combination shall be carried out only for modes with natural frequency less than 33 Hz; the effect of modes with natural frequencies more than 33 Hz shall be included by the missing mass correction procedure following established principles of structural dynamics. If justified by rigorous analysis, designers may use a cut off frequency other than 33 Hz.

5.4.7.5.3 *Combination of modes*

The responses of different modes considered shall be combined by one of the two methods given below:

a) Peak response quantities (for example member forces, displacements, storey forces, storey shears, and base reactions) may be combined as per Complete Quadratic Combination (CQC) method, as given below:

$$\lambda = \sqrt{\sum_{i=1}^{N_m} \sum_{j=1}^{N_m} \lambda_i \ \rho_{ij} \ \lambda_j}$$

where

λ = estimate of peak response quantity;

λ_i = response quantity in mode *i* (with sign);

λ_{ij} = response quantity in mode *j* (with sign);

ρ_{ij} = cross-modal correlation co-efficient

$$= \frac{8\zeta^2(1+\beta)\beta^{1.5}}{(1-\beta^2)^2 + 4\zeta^2\beta(1+\beta)^2};$$

N_m = number of modes considered;

ζ = modal damping coefficient ratio which shall be taken as 0.05;

β = natural frequency ratio = $\frac{\omega_j}{\omega_i}$;

ω_j = circular natural frequency in mode *j*; and

ω_i = circular natural frequency in mode *i*.

b) Alternatively, the peak response quantities may be combined as follows:

1) If building does not have closely-spaced modes, then net peak response quantity λ due to all modes considered shall be estimated as:

$$\lambda = \sqrt{\sum_{k=1}^{N_m} (\lambda_k)^2}$$

where

λ_k = peak response quantity in mode *k*, and

N_m = number of modes considered.

2) If building has a few closely-spaced modes, then net peak response quantity λ^* due to these closely space modes alone shall be obtained as:

$$\lambda^* = \sum_c |\lambda_c|$$

where

λ_c = peak response quantity in closely spaced mode *c*. The summation is for closely spaced modes only. Then, this peak response quantity λ^* due to closely spaced modes is combined with those of remaining well-separated modes by method described above.

5.4.7.5.4 *Simplified method of dynamic analysis of buildings*

Regular buildings may be analysed as a system of masses lumped at the floor levels with each mass having one degree of freedom, that of lateral displacement in the direction under consideration. In such a case, the following expressions shall hold in the computation of the various quantities:

a) *Modal mass* — Modal mass M_k of mode *k* is given by:

$$M_k = \frac{\left[\sum_{i=1}^{n} W_i \phi_{ik}\right]^2}{g \sum_{i=1}^{n} W_i (\phi_{ik})^2}$$

where

g = acceleration due to gravity,

ϕ_{ik} = mode shape coefficient at floor i in mode k,

W_i = seismic weight of floor i of the structure, and

n = number of floors of the structure.

b) *Mode participation factor* — Mode participation factor P_k of mode k is given by:

$$P_k = \frac{\sum_{i=1}^{n} W_i \phi_{ik}}{\sum_{i=1}^{n} W_i (\phi_{ik})^2}$$

c) *Design lateral force at each floor in each mode* — Peak lateral force Q_{ik} at floor i in mode k is given by:

$$Q_{ik} = A_k \phi_{ik} P_k W_i$$

where

A_k = design horizontal acceleration spectrum value as per **5.3.4.2** using natural period of oscillation T_k of mode k obtained from dynamic analysis.

d) *Storey shear forces in each mode* — Peak *shear force* V_{ik} acting in storey i in mode k is given by:

$$V_{ik} = \sum_{j=i+1}^{n} Q_{ik}$$

e) *Storey shear force due to all modes considered* — Peak storey shear force V_i in storey i due to all modes considered, shall be obtained by combining those due to each mode in accordance with **5.4.7.5.3**.

f) *Lateral forces at each storey due to all modes considered* — Design lateral forces F_{roof} at roof level and F_i at level of floor i shall be obtained as:

$$F_{roof} = V_{roof}, \text{ and}$$

$$F_i = V_i - V_{i+1}.$$

5.4.8 *Torsion*

5.4.8.1 Provision shall be made in all buildings for increase in shear forces on the lateral force resisting elements resulting from twisting about the vertical axis of the building, arising due to eccentricity between the centre of mass and centre of resistance at the floor levels. The design forces calculated as in **5.4.6** and **5.4.7.5** shall be applied at the displaced centre of mass so as to cause design eccentricity (as given by **5.4.8.2**) between the displaced centre of mass and centre of resistance.

5.4.8.2 *Design eccentricity*

While performing structural analysis by the Seismic Coefficient Method or the Response Spectrum Method, the design eccentricity e_{di} to be used at floor i shall be taken as:

$$e_{di} = \begin{cases} 1.5e_{si} + 0.05b_i \\ e_{si} - 0.05b_i \end{cases}$$

whichever gives the more severe effect on lateral force resisting elements;

where

e_{si} = static eccentricity at floor i,

= distance between centre of mass and centre of stiffness, and

b_i = floor plan dimension of floor i, perpendicular to the direction of force.

The factor 1.5 represents dynamic amplification factor, and $0.05b_i$ represents the extent of accidental eccentricity. The above amplification of 1.5 need not be used, when performing structural analysis by the Time History Method.

5.4.9 *RC Frame Buildings with Unreinforced Masonry Infill Walls*

5.4.9.1 In RC buildings with moment resisting frames and unreinforced masonry (URM) infill walls, variation of storey stiffness and storey strength shall be examined along the height of the building considering in-plane stiffness and strength of URM infill walls. If storey stiffness and strength variations along the height of the building render it to be irregular as per Table 45, the irregularity shall be corrected especially in Seismic Zones III, IV and V.

5.4.9.2 The estimation of in-plane stiffness and strength of URM infill walls shall be based on provisions given hereunder.

5.4.9.2.1 The modulus of elasticity E_m (in MPa) of masonry infill wall shall be taken as:

$$E_m = 550 f_m$$

where f_m is the compressive strength of masonry prism (in MPa) obtained as per good practice [6-1(19)] or given by expression:

$$f_m = 0.433 f_b^{0.64} f_{mo}^{0.36}$$

where

f_b = compressive strength of brick, in MPa and

f_{mo} = compressive strength of mortar, in MPa.

5.4.9.2.2 URM infill walls shall be modeled by using equivalent diagonal struts as below:

a) Ends of diagonal struts shall be considered to be pin-jointed to RC frame;

b) For URM infill walls without any opening, width w_{ds} of equivalent diagonal strut (*see* Fig. 17) shall be taken as:

$$w_{ds} = 0.175\alpha_h^{-0.4} L_{ds}$$

where

$$\alpha_h = h\left(\sqrt[4]{\frac{E_m t \sin 2\theta}{4E_f I_c h}}\right)$$

where E_m and E_f are the moduli of elasticity of the materials of the URM infill and RC MRF, I_c the moment of inertia of the adjoining column, t the thickness of the infill wall, and θ the angle of the diagonal strut with the horizontal;

c) For URM infill walls with openings, no reduction in strut width is required; and

d) Thickness of the equivalent diagonal strut shall be taken as thickness t of original URM infill wall, provided $h/t < 12$ and $l/t < 12$, where h is clear height of URM infill wall between the top beam and bottom floor slab, and l clear length of the URM infill wall between the vertical RC elements (columns, walls or a combination thereof) between which it spans.

5.4.10 *RC Frame Buildings with Open Storeys*

5.4.10.1 RC moment resisting frame buildings, which have open storey(s) at any level, such as due to discontinuation of unreinforced masonry (URM) infill walls or of structural walls, are known to have flexible and weak storeys as per Table 45. In such buildings, suitable measures shall be adopted, which increase both stiffness and strength to the required level in the open storey and the storeys below. These measures shall be taken along both plan directions as per requirements laid down under **5.4.10.2** to **5.4.10.4**. The said increase may be achieved by providing measures, like:

a) RC structural walls, or

b) Braced frames, in select bays of the building.

5.4.10.2 When the RC structural walls are provided, they shall be,

a) founded on properly designed foundations;

b) continuous preferably over the full height of the building; and

c) connected preferably to the moment resisting frame of the building.

5.4.10.3 When the RC structural walls are provided, they shall be designed such that the building does NOT have the following:

a) Additional torsional irregularity in plan than that already present in the building. In assessing this, lateral stiffness shall be included of all elements that resist lateral actions at all levels of the building;

b) Lateral stiffness in the open storey(s) is less

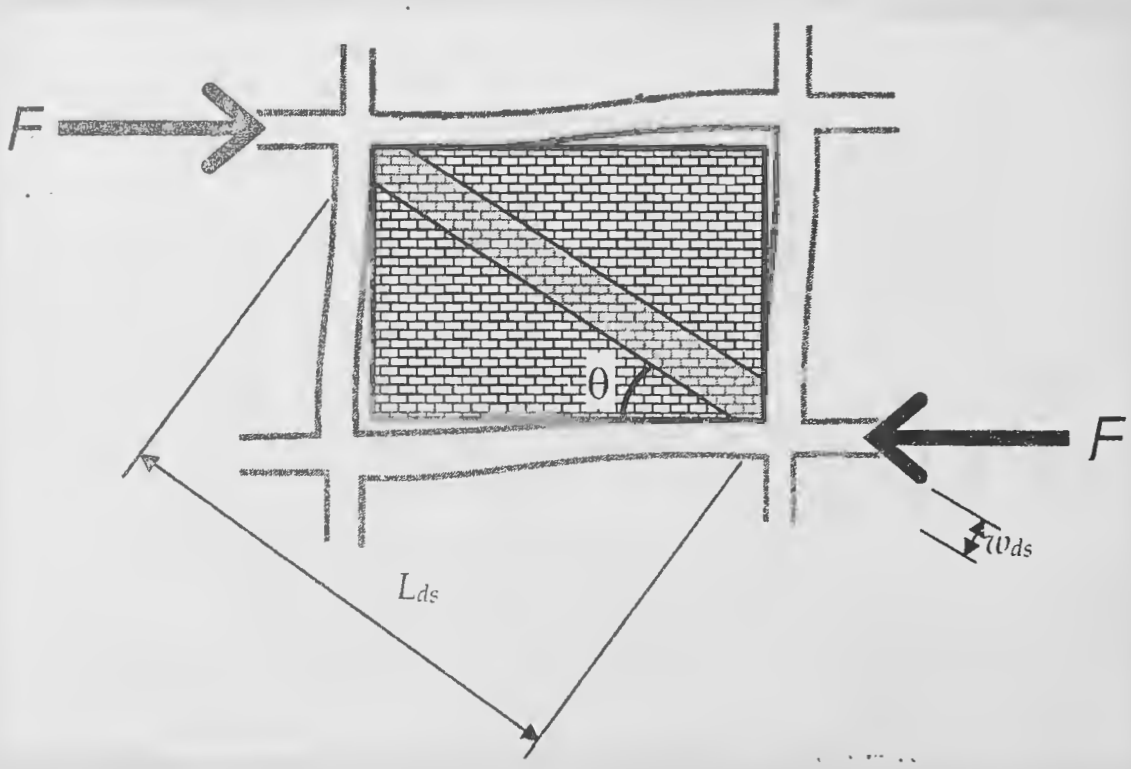

FIG. 17 EQUIVALENT DIAGONAL STRUT OF URM INFILL WALL

than 80 percent of that in the storey above; and

c) Lateral strength in the open storey(s) is less than 90 percent of that in the storey above.

5.4.10.4 When the RC structural walls are provided, the RC structural wall plan density ρ_{sw} of the building shall be at least 2 percent along each principal direction in Seismic Zones III, IV and V. These walls shall be well distributed in the plan of the building along each plan direction. RC structural walls of this measure can be adopted even in regular buildings that do not have open storey(s).

5.4.10.5 RC structural walls in buildings located in Seismic Zones III, IV and V shall be designed and detailed to comply with all requirements of good practice [6-1(8)].

5.4.11 *Deformation*

Deformation of RC buildings shall be obtained from structural analysis using a structural model based on section properties given in **5.3.4.3**.

5.4.11.1 *Storey drift limitation*

5.4.11.1.1 Storey drift in any storey shall not exceed 0.004 times the storey height, under the action of design base of shear V_B with no load factors mentioned in **5.3.3**, that is, with partial safety factor for all loads taken as 1.0.

5.4.11.1.2 Displacement estimates obtained from dynamic analysis methods shall not be scaled as given in **5.4.7.3.**

5.4.11.2 *Deformation capability of non-seismic members*

For buildings located in Seismic Zones III, IV and V, it shall be ensured that structural components, that are not a part of seismic force resisting system in considered direction of ground motion but are monolithically connected, do not lose their vertical load-carrying capacity under induced net stress resultants, including additional bending moments and shear forces resulting from storey deformations equal to R times storey displacements calculated as per **5.4.11.1**, where R is specified in Table 48.

5.4.11.3 *Separation between adjacent units*

Two adjacent buildings, or two adjacent units of the same building with separation joint between them, shall be separated by a distance equal to R times sum of storey displacements Δ_1 and Δ_2 calculated as per **5.4.11.1** of the two buildings or two units of the same building, to avoid pounding as the two buildings or two units of the same building oscillate towards each other.

When floor levels of the adjacent units of a building or buildings are at the same level, the separation distance shall be calculated as $(R_1\Delta_1 + R_2\Delta_2)/2$, where R_1 and Δ_1 correspond to building 1, and R_2 and Δ_2 to building 2.

5.4.12 *Miscellaneous*

5.4.12.1 *Foundations*

Isolated RC footings without tie beams or unreinforced strip foundations, shall not be adopted in buildings rested on soft soils (with corrected $N < 10$) in any Seismic Zone. Use of foundations vulnerable to significant differential settlement due to ground shaking shall be avoided in buildings located in Seismic Zones III, IV and V.

Individual spread footings or pile caps shall be interconnected with ties (*see* **5.3.4.1** of good practice [6-1(20)]), except when individual spread footings are directly supported on rock, in buildings located in Seismic Zones IV and V. All ties shall be capable of carrying, in tension and in compression, an axial force equal to $A_h/4$ times the larger of the column or pile cap load, in addition to the otherwise computed forces, subject to a minimum of 5 percent of larger of column or pile cap loads. Here, A_h is as per **5.3.4.2**.

Pile shall be designed and constructed to withstand maximum curvature imposed (structural response) by earthquake ground shaking. Design of anchorage of piles into the pile cap shall consider combined effects, including that of axial forces due to uplift and bending moments due to fixity to pile cap.

5.4.12.2 *Cantilever projections*

5.4.12.2.1 *Vertical projections*

Small-sized facilities (like towers, tanks, parapets, smoke stacks/chimneys) and other vertical cantilever projections attached to buildings and projecting vertically above the roof, but not a part of the structural system of the building, shall be designed and checked for stability for five times the design horizontal seismic coefficient A_h specified in **5.3.4.2** for that building. In the analysis of the building, weights of these projecting elements shall be lumped with the roof weight.

5.4.12.2.2 *Horizontal projections*

All horizontal projections of buildings (like cantilever structural members at the porch level or higher) or attached to buildings (like brackets, cornices and balconies) shall be designed for five times the design

vertical coefficient A_v specified in **5.3.4.6** for that building.

5.4.12.2.3 The increased design forces specified in **5.4.12.2.1** and **5.4.12.2.2** are only for designing the projecting parts and their connections with the main structures, and NOT for the design of the main structure.

5.4.12.3 *Compound walls*

Compound walls shall be designed for the design horizontal coefficient A_h of 1.25Z, that is, A_h calculated using **5.3.4.2** with $I = 1$, $R = 1$ and $S_a/g = 2.5$.

5.4.12.4 *Connections between parts*

All small items and objects of a building shall be tied to the building or to each other to act as single unit, except those between the separation joints and seismic joints. These connections shall be made capable of transmitting the forces induced in them, but not less than 0.05 times weight of total dead and imposed load reactions; frictional resistance shall not be relied upon in these calculations.

6 SNOW LOAD

6.1 This clause deals with snow loads on roofs of buildings. Roofs should be designed for the actual load due to snow or for the imposed loads specified in **3**, whichever is more severe.

NOTE — Mountainous regions in northern parts of India are subjected to snow fall. In India, part of Jammu and Kashmir (Baramulla District, Srinagar District, Anantnag District, and Leh and Kargil District); Punjab and Himachal Pradesh (Chamba, Kullu, Kinnaur District, Mandi District, Sirmaur District and Simla District); and Uttarakhand (Dehra Dun District, Tehri Garhwal District, Almora District, Pithoragarh District and Nainital District) experience snow fall of varying depths two or three times in a year.

6.2 Notations

a) μ (Dimensionless) — Nominal values of the shape coefficients, taking into account snow drifts, sliding snow, etc, with subscripts, if necessary.

b) l_i (metre) — Horizontal dimension with numerical subscripts, if necessary.

c) h_i (metre) — Vertical dimensions with numerical subscripts, if necessary.

d) β_i (degree) — Roof slope.

e) s_o (pascal) — Snow load on ground.

f) s_i (pascal) — Snow load on roofs.

6.3 Snow Load in Roof(s)

6.3.1 The minimum design snow load on a roof area or any other area above ground which is subjected to snow accumulation is obtained by multiplying the snow load on ground, s_o by the shape coefficient μ, as applicable to the particular roof area considered, expressed as:

$$s = \mu\, s_o$$

where

s = design snow load on plan area of roof, in Pa;

μ = shape coefficient (*see* **6.4**); and

s_o = ground snow load, in Pa (1 Pa=1 N/m^2).

NOTE — Ground snow load at any place depends on the critical combination of the maximum depth of undisturbed aggregate cumulative snow fall and its average density. In due course the characteristic snow load on ground for different regions will be included based on studies. Till such time the users of this code are advised to contact either Snow and Avalanches Study Establishment (Defence Research and Development Organization), Manali (HP) or India Meteorological Department (IMD), Pune in the absence of any specific information for any location.

6.4 Shape Coefficients

6.4.1 *General Principles*

In perfectly calm weather, falling snow would cover roofs and the ground with a uniform blanket of snow, and the design snow load could be considered as a uniformly distributed load. Truly uniform loading conditions, however, are rare and have usually only been observed in areas that are sheltered on all sides by high trees, buildings, etc. In such a case, the shape coefficient would be equal to unity.

In most regions, snow-falls are accompanied or followed by winds. The winds will redistribute the snow, and on some roofs especially multilevel roofs, the accumulated drift load may reach a multiple of the ground load. Roofs which are sheltered by other buildings, vegetation, etc, may collect more snow load than the ground level. The phenomenon is of the same nature as that illustrated for multilevel roofs in **6.4.2.4**.

So far, sufficient data are not available to determine the shape coefficient on a statistical basis. Therefore, a nominal value is given. A representative sample of roofs is shown in **6.4.2**. However, in special cases such as strip loading, cleaning of the roof periodically by deliberate heating of the roof, etc, have to be treated separately.

The distribution of snow in the direction parallel to the eaves is assumed to be uniform.

6.4.2 *Shape Coefficients for Selected Types of Roofs*

6.4.2.1

	Simple Flat and Monopitch Roofs	Simple Pitched Roofs (Positive Roof Slope)[1]
	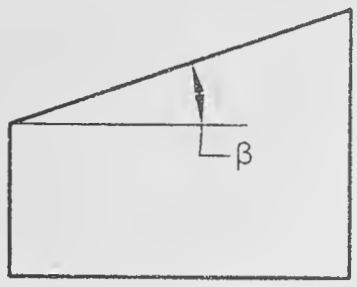	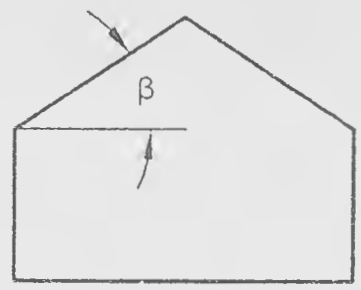
	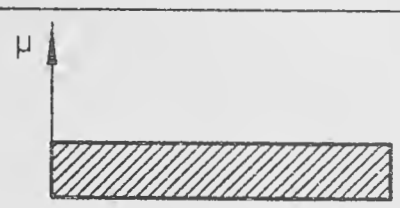	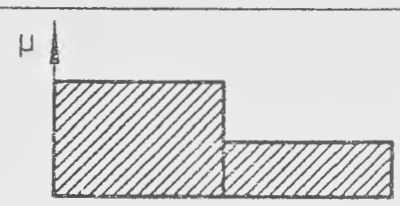
$0° < \beta \leq 30°$	$\mu_1 = 0.8$	$\mu_2 = \mu_1 = 0.8$
$15° < \beta \leq 30°$		$\mu_2 = 0.8 + 0.4\left(\frac{\beta - 15}{15}\right)$ $\mu_1 = 0.8$
$30° < \beta \leq 60°$	$\mu_1 = 0.8\left(\frac{60 - \beta}{30}\right)$	$\mu_2 = 1.2\left(\frac{60 - \beta}{30}\right)$ $\mu_1 = 0.8\left(\frac{60 - \beta}{30}\right)$
$\beta > 60°$	$\mu_1 = 0$	$\mu_2 = \mu_1 = 0$

6.4.2.2

	Simple or Multiple Pitched Roofs (Negative Roof Slope)	Two-Span or Multispan Roof
	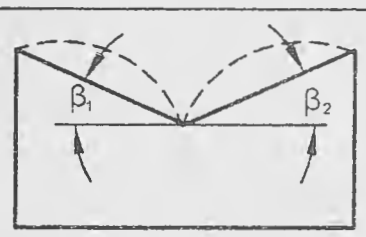 $\beta = \frac{\beta_1 + \beta_2}{2}$	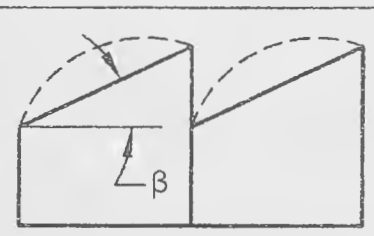
	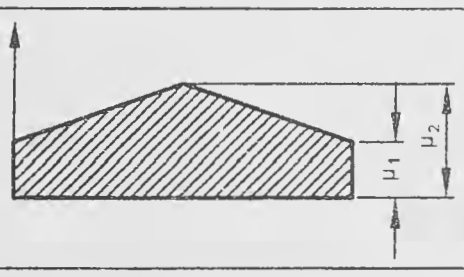	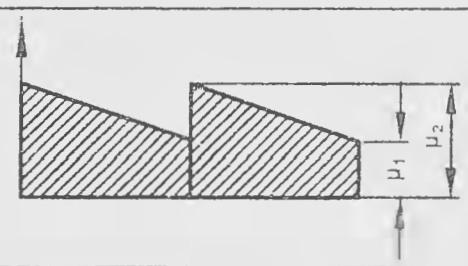
$0° < \beta < 30°$	$\mu_1 = 0.8\left(\frac{30 + \beta}{30}\right)$ $\mu_1 = 0.8$	$\mu_1 = 0.8\left(\frac{30 + \beta}{30}\right)$ $\mu_1 = 0.8$
$30° < \beta < 60°$	$\mu_2 = 1.6$ $\mu_1 = 0.8\left(\frac{60 - \beta}{30}\right)$	$\mu_2 = 1.6$ $\mu_1 = 0.8\left(\frac{60 - \beta}{30}\right)$
$\beta > 60°$	$\mu_2 = 1.6$ $\mu_1 = 0$	$\mu_2 = 1.6$ $\mu_1 = 0$

[1] For asymetrical simple pitched roofs, each side of the roof shall be treated as one half of corresponding symmetrical roofs.

6.4.2.3 *Simple curved roofs*

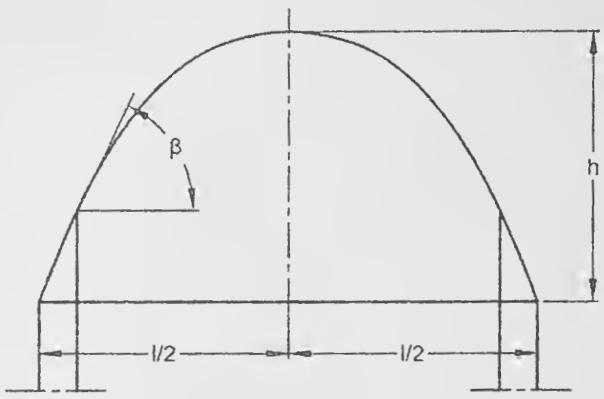

THE FOLLOWING CASES 1 AND 2 MUST BE EXAMINED

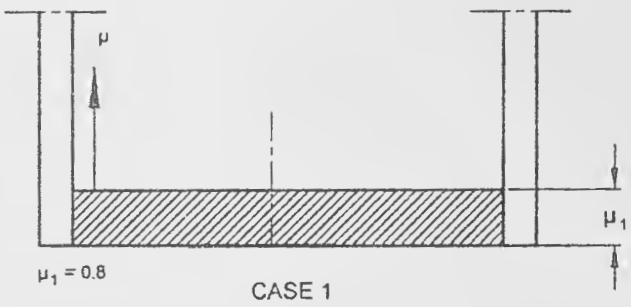

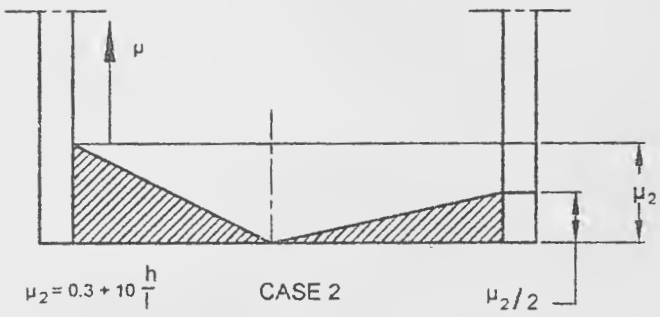

Restriction:

$m_2 \leq 2.3$

$m = 0$, if $b > 60°$

6.4.2.4 *Multilevel roofs*[1)]

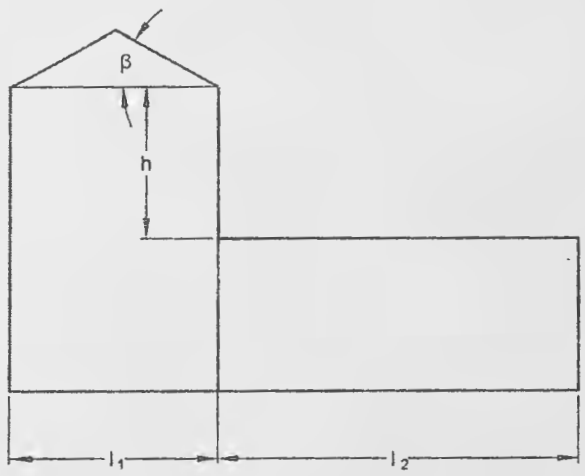

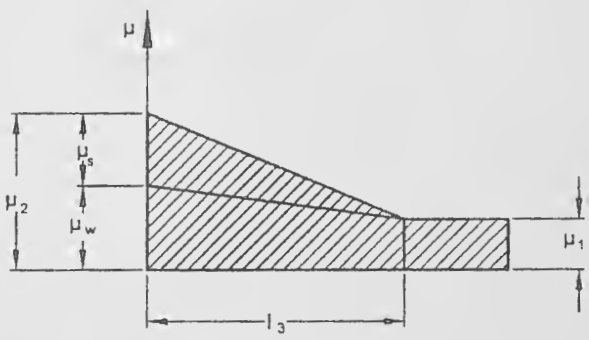

$\mu_1 = 0.8$

$\mu_1 = \mu_s + \mu_w$

where

μ_s = due to sliding

μ_w = due to wind

l_3 = $2h$ [2)] *but is restricted as follows:*

$5\,\text{m} \leq l_3 \leq 15\,\text{m}$

$$\mu_w = \frac{l_1 + l_2}{2h} \leq \frac{kh}{s_o}$$

with the restriction $0.8 \leq \mu_w \leq 4.0$

where

h is in metres

s_o is in kilopascals (kilonewtons per square metre)

k = 2 kN/m^2

$\beta \geq 15°$: μ_s is determined from an additional load amounting to 50 percent of the maximum total load on the adjacent slope of the upper root [3)] and is distributed linearly as shown in the figure.

$\beta \leq 15°$: $\mu_s = 0$

---

1) A more extensive formula for μ_w is described in Annex L.

2) If $l_2 < l_3$ the coefficient μ is determined by interpolation between μ_1 and μ_2.

3) The load on the upper roof is calculated according to **6.4.2.1**.

6.4.2.5 *Complex multilevel roofs*

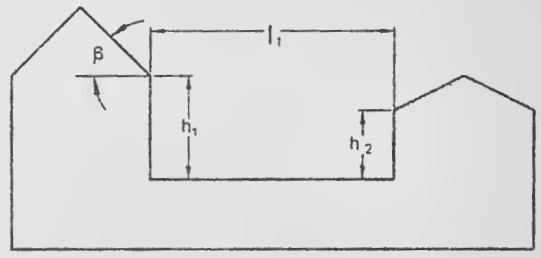

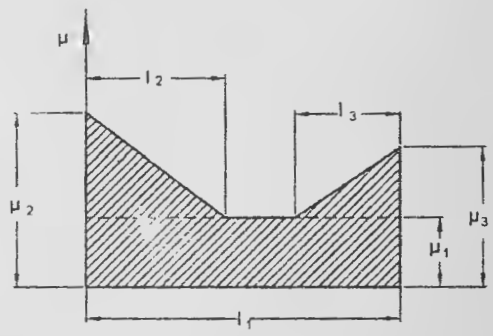

$l_2 + l_3 < l_1$

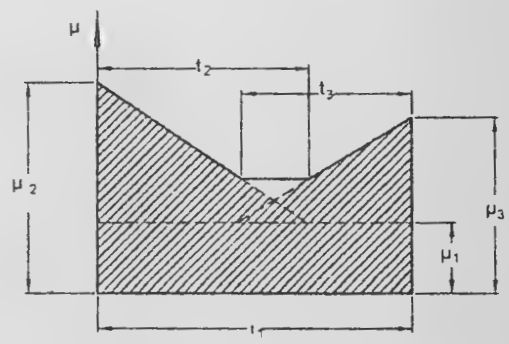

$l_2 + l_3 > l_1$

$l_2 = 2h_1 : l_3 = 2h_2 : \mu_{1=0.8}$

Restriction:

$5\text{ m} < l_2 \leq 15\text{ m};$

$5\text{ m} < l_3 \leq 15\text{ m};$

μ_2 and $\mu_3 = \mu_2 + \mu_w$, are calculated according to **6.4.2.1, 6.4.2.2** and **6.4.2.4**

6.4.2.6 *Roofs with local projections and obstructions*

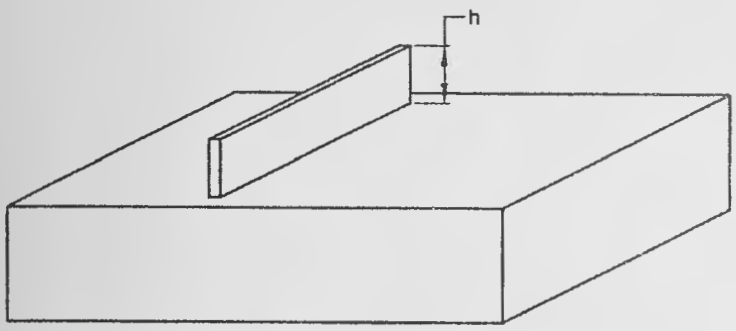

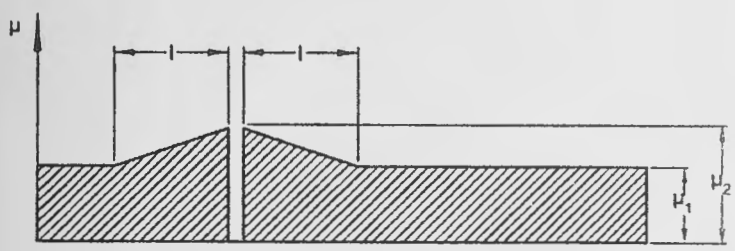

$$\mu_2 = \frac{kh}{s_o}$$

h is in metres

s_o is in kilopascals (kilonewtons per square metre)

$k = 2\text{ kN/m}^2$

$\mu = 0.8$

Restrictions:

$0.8 \leq \mu_w \leq 2.0$

$5\text{m} \leq l \leq 15\text{m}$

6.4.3 *Shape Coefficients in Areas Exposed to Wind*

The shape coefficients given in **6.4.2** and Annex L may be reduced by 15 percent, provided the designer has demonstrated that the following conditions are fulfilled:

a) The building is located in an exposed location such as open level terrain with only scattered buildings, trees or other obstructions so that the roof is exposed to the winds on all sides and is not likely to become shielded in the future by obstructions higher than the roof within a distance from the building equal to ten times the height of the obstruction above the roof level; and

b) The roof does not have any significant projections such as parapet walls which may prevent snow from being blown off the roof.

NOTE — In some areas, winter climate may not be of such a nature as to produce a significant reduction of roof loads from the snow load on the ground. These areas are:

a) Winter calm valleys in the mountains where sometimes layer after layer of snow accumulates on roofs without any appreciable removal of snow by wind; and

b) Areas (that is, high temperature) where the maximum snow load may be the result of single snowstorm, occasionally without appreciable wind removal.

In such areas, the determination of the shape coefficients shall be based on local experience with due regard to the likelihood of wind drifting and sliding.

7 SPECIAL LOADS

7.1 This clause gives guidance on loads and load effects due to temperature changes, soil and hydrostatic pressures, internally generating stresses (due to creep, shrinkage, differential settlement, etc), accidental loads, etc, to be considered in the design of buildings as appropriate. This clause also includes guidance on load combinations. The nature of loads to be considered for a particular situation is to be based on engineering judgment (*see also* **3.6**)

7.2 Temperature Effects

7.2.1 Expansion and contraction due to changes in temperature of the materials of a structure shall be considered in design. Provision shall be made either to relieve the stress by the provision of expansion/ contraction joints in accordance with good practice [6-1(21)] or design the structure to carry additional stresses due to temperature effects as appropriate to the problem.

7.2.1.1 The temperature range varies for different regions and under different diurnal and seasonal conditions. The absolute maximum and minimum temperature which may be expected in different localities in the country are indicated in Annex B of good practice [6-1(22)]. These figures may be used for guidance in assessing the maximum variations of temperature.

7.2.1.2 The temperatures indicated are the air temperatures in the shade. The range of variation in temperature of the building materials may be appreciably greater or less than the variation of air temperature and is influenced by the condition of exposure and the rate at which the materials composing the structure absorb or radiate heat. This difference in temperature variations of the material and air should be given due consideration.

7.2.1.3 The structural analysis shall take account of changes of the mean (through the section) temperature in relation to the initial (st) and the temperature gradient through the section.

a) It should be borne in mind that the changes of mean temperature in relation to the initial arc liable to differ as between one structural element and another in buildings or structures, as for example, between the external walls and the internal elements of a building. The distribution of temperature through section of single-leaf structural elements may be assumed linear for the purpose of analysis.

b) The effect of mean temperature changes t_1 and t_2, and the temperature gradients v_1 and v_2 in the hot and cold seasons for single-leaf structural elements shall be evaluated on the basis of analytical principles.

NOTES

1 For portions of the structure below ground level, the variation of temperature is generally insignificant. However, during the period of construction, when the portions of the structure are exposed to weather elements, adequate provision should be made to encounter adverse effects, if any.

2 If it can be shown by engineering principles, or if it is known from experience, that neglect of some or all the effects of temperature do not affect the structural safety and serviceability, they need not be considered in design.

7.3 Hydrostatic and Soil Pressure

7.3.1 In the design of structures or parts of structures below ground level such as retaining walls and other walls in basement floors, the pressure exerted by the soil or water or both shall be duly accounted for on the basis of established theories. Due allowance shall be made for possible surcharge from stationary or moving loads. When a portion or whole of the soil is below the free water surface, the lateral earth pressure shall be evaluated for weight of soil diminished by buoyancy and the full hydrostatic pressure.

7.3.1.1 All foundation slabs and other footings subjected to water pressure shall be designed to resist a uniformly distributed uplift equal to the full hydrostatic pressure. Checking of overturning of foundation under submerged condition shall be done considering buoyant weight of foundation.

7.3.2 While determining the lateral soil pressure on column like structural members such as pillars which rest in sloping soils, the width of the member shall be taken as follows (*see* Fig. 18):

Actual Width of Member	*Ratio of Effective Width to Actual Width*
Less than 0.5 m	3.0
Beyond 0.5 m and up to 1 m	3.0 to 2.0
Beyond 1 m	2.0

The relieving pressure of soil in front of the structural member concerned may generally not be taken into account.

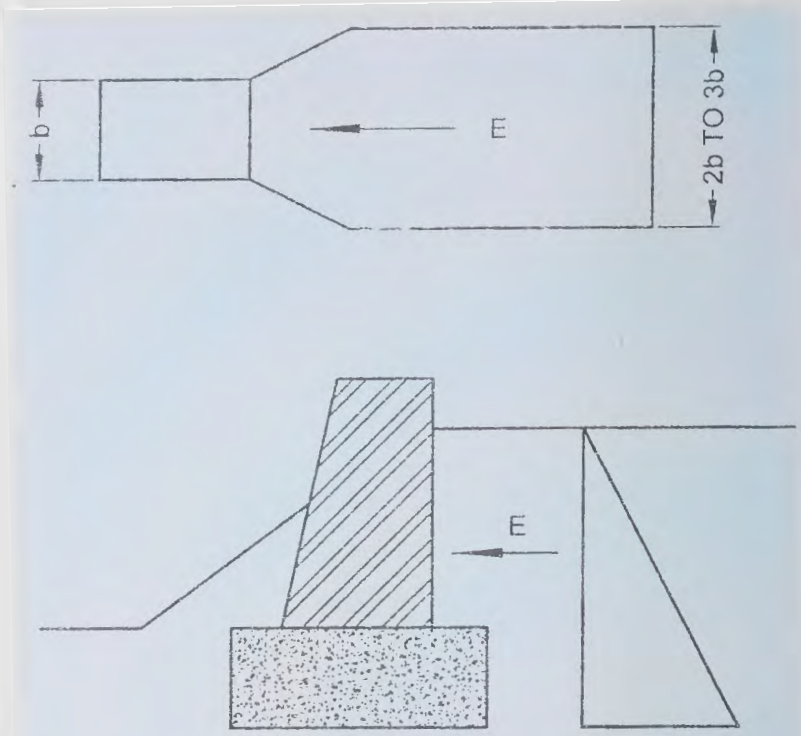

FIG. 18 SKETCH SHOWING EFFECTIVE WIDTH OF PILLAR FOR CALCULATING SOIL PRESSURE

7.3.3 Safe-guarding of structures and structural members against overturning and horizontal sliding shall be verified. Imposed loads having favourable effect shall be disregarded for the purpose. Due consideration shall be given to the possibility of soil being permanently or temporarily removed.

7.4 Fatigue

7.4.1 *General*

Fatigue cracks are usually initiated at points of high stress concentration. These stress concentrations may be caused by or associated with holes (such as bolt or rivet holes in steel structures), welds including stray or fusions in steel structures, defects in materials, and local and general changes in geometry of members. The cracks usually propagate if the loading is cyclic and repetitive.

Where there is such cyclic and repetitive loading, sudden changes of shape of a member or part of a member, especially in regions of tensile stress and/or local secondary bending, shall be avoided. Suitable steps shall be taken to avoid critical vibrations due to wind and other causes.

7.4.2 Where necessary, permissible stresses shall be reduced to allow for the effects of fatigue. Allowance for fatigue shall be made for combinations of stresses due to dead load and imposed load. Stresses due to wind and earthquakes may be ignored, when fatigue is being considered, unless otherwise specified in relevant Codes of practice.

Each element of the structure shall be designed for the number of stress cycles of each magnitude to which it is estimated that the element is liable to be subjected during the expected life of the structure. The number of cycles of each magnitude shall be estimated in the light of available date regarding the probable frequency of occurrence of each type of loading.

NOTE — Apart from the general observations made herein, the Section is unable to provide any precise guidance in estimating the probabilistic behaviour and response of structures of various types arising out of repetitive loading approaching fatigue conditions in structural members, joints, materials, etc.

7.5 Structural Safety During Construction

7.5.1 All loads required to be carried by the structures or any part of it due to storage or positioning of construction materials and erection equipment including all loads due to operation of such equipment, shall be considered as erection loads. Proper provision shall be made, including temporary bracings, to take care of all stresses due to erection loads. The conjunction with the temporary bracings shall be capable of sustaining these erection loads, without exceeding the permissible stresses specified in respective Codes of practice. Dead load, wind load and such parts of imposed load, as would be imposed on the structure during the period of erection, shall be taken as acting together with erection loads.

7.6 Accidental Loads

The occurrence of which, with a significant value, is unlikely on a given structure over the period of time under consideration, and also in most cases, is of short duration. The occurrence of an accidental load could, in many cases, be expected to cause severe consequences, unless special measures are taken.

The accidental loads arising out of human action include the following:

a) Impacts and collisions,
b) Explosions, and
c) Fire.

Characteristic of the above stated loads are that they are not a consequence of normal use and that they are undesired, and that extensive effects are made to avoid them. As a result, the probability of occurrence of an accidental load is small whereas the consequences may be severe.

The causes of accidental loads may be,

1) inadequate safety of equipment (due to poor design or poor maintenance); and
2) wrong operation (due to insufficient teaching or training, indisposition, negligence or unfavourable external circumstances).

In most cases, accidental loads only develop under a combination of several unfavourable occurrences. In practical applications, it may be necessary to neglect the most unlikely loads. The probability of occurrence of accidental loads, which are neglected, may differ for different consequences of a possible failure. A data base for a detailed calculation of the probability will seldom be available.

7.6.1 *Impact and Collisions*

7.6.1.1 *General*

During an impact, the kinetic impact energy has to be absorbed by the vehicle hitting the structure and by the structure itself. In an accurate analysis, the probability of occurrence of an impact with a certain energy object hitting the structure and the structure itself at the actual place shall be considered. Impact energies for dropped object should be based on the actual loading capacity and lifting height.

Common sources of impact are:

a) Vehicles;
b) Dropped objects from cranes, fork lifts, etc;
c) Cranes out of control, crane failures; and
d) Flying fragments.

The codal requirements regarding impact from vehicles and cranes are given in **7.6.1.2** and **7.6.1.3**.

7.6.1.2 The requirements for loads as a result of collision between vehicle and structural or non-structural elements shall be as per **7.6.1.2.1** and **7.6.1.2.2.**

7.6.1.2.1 *Collisions between vehicles and structural elements*

In road traffic, the requirement that a structure shall be able to resist collision may be assumed to be fulfilled, if it is demonstrated that the structural element is able to stop a fictitious vehicle, as described below. It is assumed that the vehicle strikes the structural element at a height of 1.2 m in any possible direction and at a speed of 10 m/s (36 km/h).

The fictitious vehicle shall be considered to consist of two masses m_1 and m_2 which during compression of the vehicle, produce an impact force increasing uniformly from zero, corresponding to the rigidities C_1 and C_2. It is assumed that the mass m_1 is broken completely before the breaking of mass m_2 begins.

The following numerical values should be used:

m_1 = 400 kg, C_1 = 10 000 kN/m, the vehicle is compressed.

m_2 = 12 000 kg, C_2 = 300 kN/m, the vehicle is compressed.

NOTE — The described fictitious collision corresponds in the case of a non-elastic structural element to a maximum static force of 630 kN for the mass m_1 and 600 kN for the mass m_2 irrespective of the elasticity, it will therefore be on the safe side to assume the static force to be 630 kN.

In addition, breaking of the mass m_1 will result in an impact wave, the effect of which will depend, to a great extent, on the kind of structural element concerned. Consequently, it will not always be sufficient to design for the static force.

7.6.1.2.1.1 *For structural elements in stilts and car parking levels*

For structural elements in stilts and car parking levels, where driveways and car parking are provided in the buildings which have limited vehicle speeds, the design shall take care of the following considerations:

a) Speed of the vehicle to be 20 km/h maximum (since within a building and inside the car parks, speed of the vehicle may not generally be more than 20 km/h).

b) Impact to be considered at a height of 450 mm to 600 mm.

Structural elements such as columns, RC walls or vertical load resisting elements shall be designed for loads due to the above unless protected by separate resisting system.

7.6.1.2.2 *Collision between vehicles and non-structural elements*

Non-structural elements, such as vehicle barriers for car parks shall be designed to resist the impact and the momentum as outlined below:

a) The horizontal force F (in kN), normal to and uniformly distributed over any length of 1.5 m of a barrier for a car park, required to withstand the impact of a vehicle shall be as given below:

$$F = \frac{0.5mv^2}{\delta_c + \delta_b}$$

where

m = gross mass of the vehicle, in kg;

v = velocity of the vehicle normal to the barrier, in m/s;

δ_c = deformation of the vehicle, in mm;

δ_b = deflection of the barrier, in mm.

b) Where the car park has been designed on the basis that the gross mass of the vehicles using it will not exceed 2 500 kg, the following values shall be used to determine the force F:

m = 1 500 kg;

v = 4.5 m/s;

δ_c = 100 mm;

For a rigid barrier, for which δ_b may be taken as zero, the force, F, appropriate to vehicles up to 2 500 kg gross mass, shall be taken as 150 kN.

c) Where the car park has been designed for vehicles whose gross mass exceeds 2 500 kg, the following values shall be used to determine the force F:

m = actual mass of the vehicle for which the car park is designed, in kg;

v = 4.5 m/s; and

δ_c = 100 mm.

d) The force determined as in (b) or (c) may be considered to act at bumper height. In the case of car parks intended for motor cars whose gross mass does not exceed 2 500 kg, this height may be taken as 375 mm above the floor level.

e) Barriers to access ramps of car parks have to withstand one-half of the force determined in (b) or (c) acting at a height of 610 mm above the ramp.

Opposite to the ends of straight ramps intended for downward travel, which exceed 20 m in length, the barrier shall be designed to withstand twice the force determined in (b) or (c) acting at a height of 610 mm above the ramp.

NOTE — The mass of 1 500 kg is taken as being more representative of the vehicle population than the extreme value of 2 500 kg.

7.6.1.3 *Safety railings*

With regard to safety, railings put up to protect structures against collision due to road traffic, it should be shown that the railings are able to resist the impact as described in **7.6.1.2**.

NOTE — When a vehicle collides with safety railings, the kinetic energy of the vehicle will be absorbed partly by the deformation of the railings and partly by the deformation of the vehicle. The part of the kinetic energy which the railings should be able to absorb without breaking down may be determined on the basis of the assumed rigidity of the vehicle during compression.

7.6.1.4 *Crane impact load on buffer stop*

The basic horizontal load P_y (tonne), acting along the crane track produced by impact of the crane on the buffer stop, is calculated by the following formula:

$$P_y = MV^2/F$$

where

V = speed at which the crane is traveling at the moment of impact (assumed equal to half the nominal value) (m/s).

F = maximum shortening of the buffer, assumed

equal to 0.1 m for light duty, medium-duty and heavy-duty cranes with flexible load suspension and loading capacity not exceeding 50 t, and 0.2 m in every other cranes.

M = reduced crane mass, (t.s²/m); and is obtained by the formula:

$$M = \frac{1}{g}\left[\frac{P_h}{2} + (P_t + kQ)\frac{L_k - l}{L_k}\right]$$

where

g = acceleration due to gravity (9.81 m/s²);

P_h = crane bridge weight (t);

P_t = crab bridge weight (t);

Q = crane loading capacity (t);

k = coefficient, assumed equal to zero for cranes with flexible load suspension and to one for cranes with rigid suspension;

L_k = crane span (m); and

l = nearness of crab (m).

7.6.2 *Explosions*

7.6.2.1 *General*

Explosions may cause impulsive loading on a structure. The following types of explosions are particularly relevant:

a) Internal gas explosions which may be caused by leakage of gas piping (including piping outside the room), evaporation from volatile liquids or unintentional evaporation from surface material (for example, fire);

b) Internal dust explosions;

c) Boiler failure;

d) External gas cloud explosions; and

e) External explosions of high explosives (TNT, dynamite).

The codal requirement regarding internal gas explosions is given in **7.6.2.2**.

7.6.2.2 *Explosion effect in closed rooms*

Gas explosion may be caused, for example by leaks in gas pipes (inclusive of pipes outside for room), evaporation from volatile liquids or unintentional evaporation of gas from wall sheathings (for example, caused by fire).

NOTES

1 The effect of explosions depends on the exploding medium, the concentration of the explosion, the shape of the room, possibilities of ventilation of the explosion, and the ductility and dynamic properties of the structure. In rooms with little possibility for relief of the pressure from the explosion, very large pressures may occur.

Internal over pressure from an internal gas explosion in rooms of sizes comparable to residential rooms and with ventilation areas consisting of window glass breaking at a pressure of 4 kN/m² (3-4 mm machine made glass) may be calculated from the following method:

a) The over pressure is assumed to depend on a factor A/V, where A is the total windows area, in m², and V is the volume, in m³, of the room considered;

b) The internal pressure is assumed to act simultaneously upon all walls and floors in one closed room; and

c) The action q_o may be taken as static action.

If account is taken of the time curve of the action, the schematic correspondence between pressure and time is assumed (*see* Fig. 19), where t_1 is the time from the start of combustion until maximum pressure is reached and t_2 is the time from maximum pressure to the end of combustion. For t_1 and t_2, the most unfavourable values should be chosen in relation to the dynamic properties of the structures. However, the values should be chosen within the intervals as given in Fig. 20.

2 Figure 19 is based on tests with gas explosions in room corresponding to ordinary residential flats and should, therefore, not be applied to considerably different conditions. The figure corresponds to an explosion caused by town gas and it might, therefore, be somewhat on the safe side in rooms where there is only the possibility of gases with a lower rate of combustion.

The pressure may be applied solely in one room or in more rooms at the same time. In the latter case, all rooms are incorporated in the volume V. Only windows or other similarly weak and light weight structural elements may be taken to be ventilation areas even though certain limited structural parts break at pressures less than q_o.

Figure 19 is given purely as guide and probability of occurrence of an explosion should be checked in each case using appropriate values.

7.6.3 *Vertical Load on Air Raid Shelters*

7.6.3.1 *Characteristic values*

As regards buildings in which the individual floors are acted upon by a total characteristic imposed action of up to 5.0 kN/m², vertical actions on air raid shelters generally located below ground level, for example, basement, etc, should be considered to have the following characteristic values:

a)	Buildings with up to 2 storeys	: 28 kN/m²
b)	Buildings with 3-4 storeys	: 34 kN/m²
c)	Buildings with more than 4 storeys	: 41 kN/m²
d)	Buildings of particularly stable construction irrespective of the number of storeys	: 28 kN/m²

In the case of buildings with floors that are acted upon by a characteristic imposed action larger than 5.0 kN/m², the above values should be increased by the difference between the average imposed action on all storeys above the one concerned and 5.0 kN/m².

NOTES

1 By storeys it is understood, every utilizable storey above the shelter.

2 By buildings of a particular stable construction, it is understood, buildings in which the load- bearing structures are made from reinforced *in-situ* concrete.

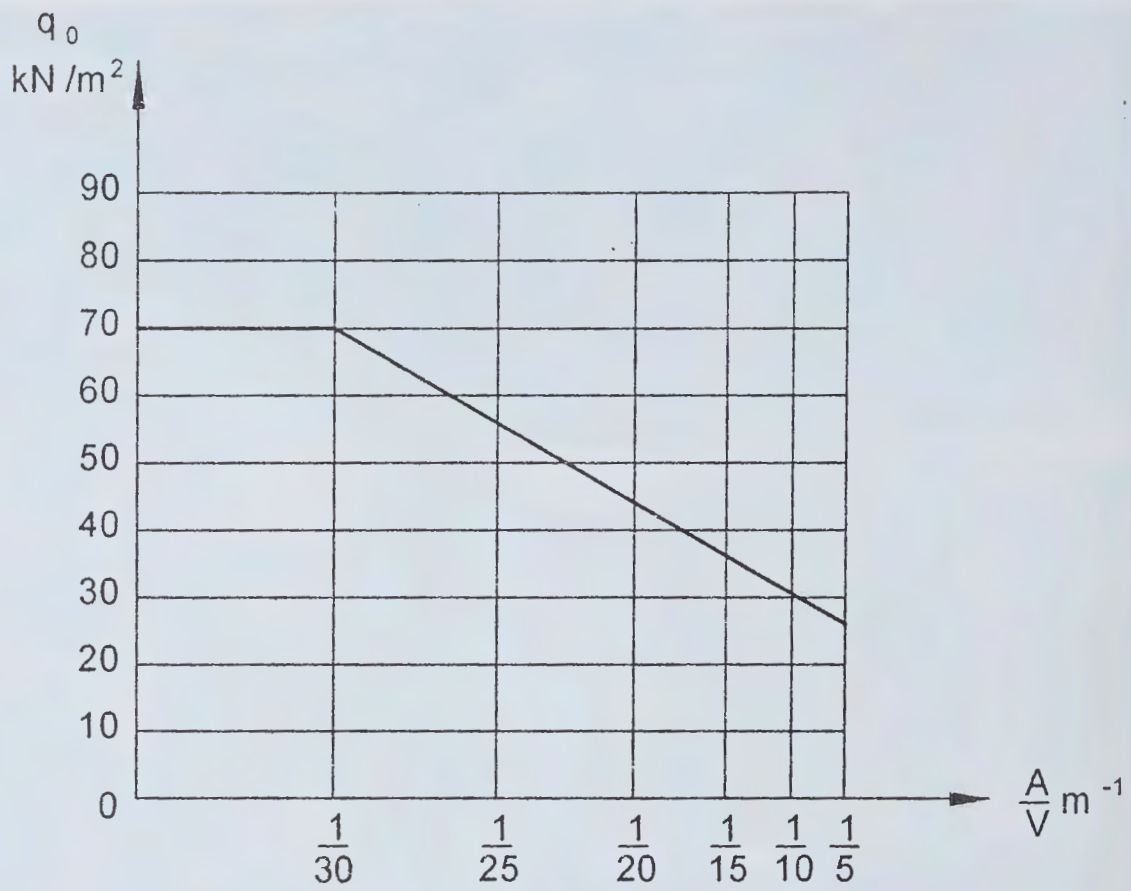

FIG. 19 SKETCH SHOWING RELATION BETWEEN PRESSURE AND TIME

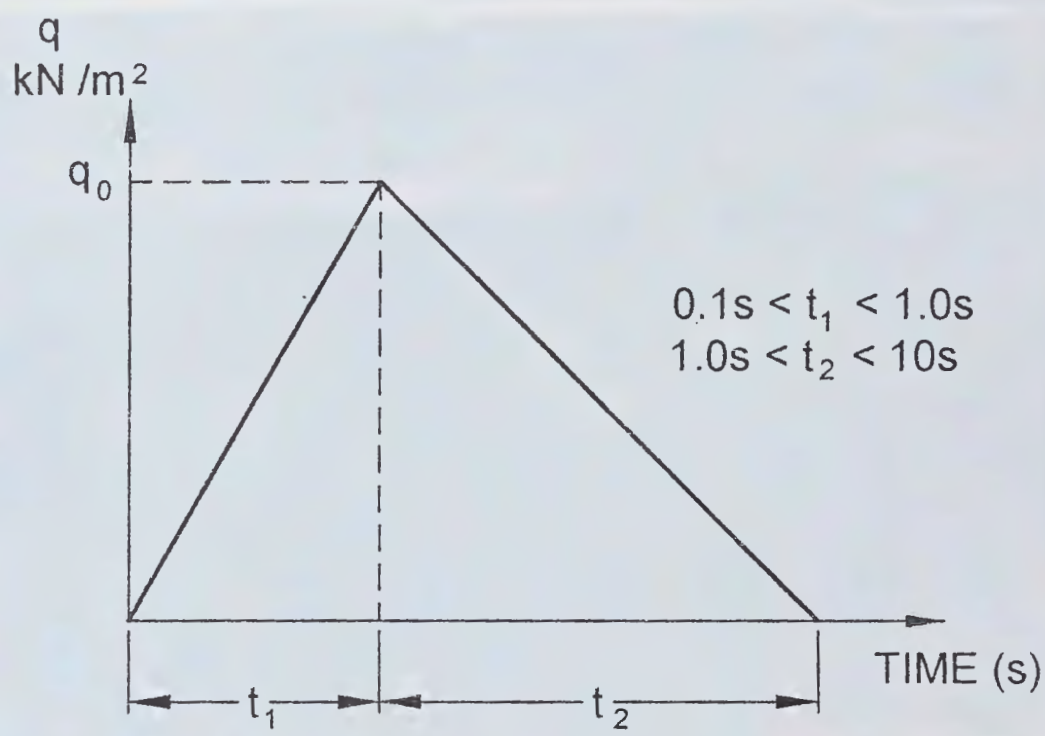

FIG. 20 SKETCH SHOWING TIME INTERVAL AND PRESSURE

7.6.4 *Fire*

7.6.4.1 *General*

Possible extraordinary loads during a fire may be considered as accidental actions. Examples are loads from people along escape routes and loads on another structure from structure failing because of a fire.

7.6.4.2 *Thermal effects during fire*

The thermal effect during fire may be determined from one of the following methods:

a) Time-temperature curve and the required fire resistance (in min), and

b) An energy balance method.

If the thermal effect during fire is determined from an energy balance method, the fire load is taken to be:

$$q = 12\, t_b$$

where

q = fire action (kJ/m^2 floor), and

t_b = required fire resistance (in min) {*see* good practice [6-1(23)]}.

NOTE — The fire action is defined as the total quantity of heat produced by complete combustion of all combustible material

in the fire compartment, inclusive of stored goods and equipment together with building structures and building materials.

7.7 Vibrations

For general details on loads due to vibrations, reference may be made to Annex M.

7.8 Blast Loads

For provisions related to blast loads, *see* Annex N.

7.9 Other Loads

Other loads not included in this Section, such as special loads due to technical process, moisture and shrinkage effects, etc, should be taken into account where stipulated by building design codes or established in accordance with the performance requirement of the structure.

7.10 For additional information regarding loads, forces and effects about cyclone resistant buildings and landslide control aspects, reference may be made to good practices [6-1(6)] and [6-1(24)] to [6-1(28)], respectively.

8 LOAD COMBINATIONS

8.1 General

A judicious combination of the loads keeping in view the probability of,

a) their acting together; and
b) their disposition in relation to other loads and severity of stresses or deformations caused by the combinations of the various loads is necessary to ensure the required safety and economy in the design of a structure.

8.2 Load Combinations

Keeping the aspect specified in **8.1**, the various loads should, therefore, be combined in accordance with the stipulation in the relevant design Codes. In the absence of such recommendations, the following loading combinations, whichever combination produces the most unfavourable effect in the building, foundation or structural member concerned may be adopted (as a general guidance). It should also be recognized in load combinations that the simultaneous occurrence of maximum values of wind, earthquake, imposed and snow loads is not likely:

a) *DL*
b) *DL* and *IL*
c) *DL* and *WL*
d) *DL* and *EL*
e) *DL* and *TL*
f) *DL*, *IL* and *WL*
g) *DL*, *IL* and *EL*
h) *DL*, *IL* and *TL*
j) *DL*, *WL* and *TL*
k) *DL*, *EL* and *TL*
m) *DL*, *IL*, *WL* and *TL*
n) *DL*, *IL*, *EL* and *TL*

(*DL* = dead load, *IL* = imposed load, *WL* = wind load, *EL* = earthquake load and *TL* = temperature load).

NOTES

1 When snow load is present on roofs, replace imposed load by snow load for the purpose of above load combinations.

2 The relevant design codes shall be followed for permissible stresses when the structure is designed by working stress method and for partial safety factors when the structure is designed by limit state design method for each of the above load combinations.

3 Whenever imposed load (*IL*) is combined with earthquake load (*EL*), the appropriate part of imposed load as specified in **5** should be used, both for evaluating earthquake effect and also for combined load effects used in such combination.

4 For the purpose of stability of the structure as a whole against overturning, the restoring moment shall be not less than 1.2 times the maximum overturning moment due to dead load plus 1.4 times the maximum overturning moment due to imposed loads. In cases where dead load provides the restoring moment, only 0.9 times the dead load shall be considered. The restoring moments due to imposed loads shall be ignored. In case of high water table, the effects of buoyancy have to be suitably taken into consideration.

5 In case of high water able, the factor of safety of 1.2 against uplift alone shall be provided.

6 The structure shall have a factor against sliding of not less than 1.4 under the most adverse combination of the applied loads/forces. In this case, only 0.9 times the dead load shall be taken into account.

7 Where the bearing pressure on soil due to wind alone is less than 25 percent of that due to dead load and imposed load, it may be neglected in design where this exceeds 25 percent, foundation may be so proportioned that the pressure due to combined effect of dead load, imposed load and wind load does not exceed the allowable bearing pressure by more than 25 percent. When earthquake effect is included, the permissible increase in allowable bearing pressure in the soil shall be in accordance with **5**.

Reduced imposed load specified in **3** for the design of supporting structures should not be applied in combination with earthquake forces.

8 Other loads and accidental load combination not included should be dealt with appropriately.

9 Crane load combinations are covered in **3.6.4**.

9 MULTI-HAZARD RISK IN VARIOUS DISTRICTS OF INDIA

9.1 Multi-Hazard Risk Concept

The commonly encountered hazards are:

a) Earthquake,
b) Cyclone,

c) Wind storm,
d) Floods,
e) Landslides,
f) Liquefaction of soils,
g) Extreme winds,
h) Cloud bursts, and
j) Failure of slopes.

A study of the earthquake, wind/cyclone, and flood hazard maps of India indicate that there are several areas in the country which run the risk of being affected by more than one of these hazards.

Further there may be instances where one hazard may cause occurrence or accentuation of another hazard such as landslides may be triggered/accelerated by earthquakes and wind storms and floods by the cyclones.

It is important to study and examine the possibility of occurrence of multiple hazards, as applicable to an area. However, it is not economically viable to design all the structures for multiple hazards. The special structures such as nuclear power plants, and life line structures such as hospitals and emergency rescue shelters may be designed for multiple hazards. For such special structures, site specific data have to be collected and the design be carried out based on the accepted levels of risk. The factors that have to be considered in determining this risk are:

1) The severity of the hazard characterized by M.M. (or M.S.K.) intensity in the case of earthquake; the duration and velocity of wind in the storms; and unprotected or protected situation of flood prone areas; and
2) The frequency of occurrence of the severe hazards.

Till such time that risk evaluation procedures are formalized, the special structures may be designed for multiple hazards using the historical data, that can be obtained for a given site and the available Code for loads already covered. The designer may have to consider the loads due to any one of the hazards individually or in combination as appropriate.

9.2 Multi-Hazard Prone Areas

The criteria adopted for identifying multi-hazard prone areas may be as follows:

a) *Earthquake and flood risk prone* — Districts which have seismic zone of Intensity 7 or more and also flood prone unprotected or protected area. Earthquake and flood can occur separately or simultaneously.
b) *Cyclone and flood risk prone* — Districts which have cyclone and flood prone areas. Here floods can occur separately from cyclones, but simultaneous also along with possibility of storm surge too.
c) *Earthquake, cyclone and flood risk prone* — Districts which have earthquake zone of intensity 7 or more, cyclone prone as well as flood prone (protected or unprotected) areas. Here the three hazards can occur separately and also simultaneously as in (a) and (b) but earthquake and cyclone will be assumed to occur separately only.
d) *Earthquake and cyclone risk prone* — Districts which have earthquake zone of intensity 7 or more and prone to cyclone hazard too. The two will be assumed to occur separately.

Based on the approach given above, the districts with multi-hazard risk are given in Annex P.

9.3 Use of the List of the District with Multi-Hazard Risk

The list provides some ready information for use of the authorities involved in the task of disaster mitigation, preparedness and preventive action. This information gives the districts which are prone to high risk for more than one hazard. This information will be useful in establishing the need for developing housing design to resist such multi-hazard situation.

ANNEX A

[*Clause* 3.3.2.1(b)]

ILLUSTRATIVE EXAMPLE SHOWING REDUCTION OF UNIFORMLY DISTRIBUTED IMPOSED FLOOR LOADS IN MULTI-STOREYED BUILDINGS FOR DESIGN OF COLUMNS

A-1 The total imposed loads from different floor levels (including the roof) coming on the central column of a multi-storeyed building (with mixed occupancy) is shown in Fig. 21. Calculate the reduced imposed load for the design of column members at different floor levels using **3.3.2.1**. Floor loads do not exceed 5.0 kN/m^2.

A-1.1 Applying reduction coefficients in accordance with **3.3.2.1**, total reduced floor loads on the column at different levels is indicated along with Fig. 21.

FLOOR NO. FROM TOP INCLUDING ROOF	IMPOSED FLOOR LOADS ON COLUMNS AT DIFFERENT FLOORS, kN	DISCOUNTED IMPOSED LOADING ON COLUMNS, kN
1	30	ROOF
2	40	30
3	50	(30 + 40) (1 - 0.1) = 63
4	50	(30 + 40 + 50) (1 - 0.2) = 96
5	40	(30 + 40 + 50 + 50) (1 - 0.3) = 119
6	45	(30 + 40 + 50 + 50 + 40) (1 - 0.4) = 126
7	50	(30 + 40 + 50 + 50 + 40 + 45) (1 - 0.4) = 153
8	50	(30 + 40 + 50 + 50 + 40 + 45 + 50) (1 - 0.4) = 183
9	40	(30 + 40 + 50 + 50 + 40 + 45 + 50 + 50) (1 - 0.4) = 213
10	40	(30 + 40 + 50 + 50 + 40 + 45 + 50 + 50 + 40) (1 - 0.4) = 237
11	40	(30 + 40 + 50 + 50 + 40 + 45 + 50 + 50 + 40 + 40) (1 - 0.4) = 261
12	55	(30 + 40 + 50 + 50 + 40 + 45 + 50 + 50 + 40 + 40 + 40) (1 - 0.5) = 237.5 < 261 adopt 261 for design
13	55	(30 + 40 + 50 + 50 + 40 + 45 + 50 + 50 + 40 + 40 + 40 + 55) (1 - 0.5) = 265
14	70	(30 + 40 + 50 + 50 + 40 + 45 + 50 + 50 + 40 + 40 + 40 + 55 + 55) (1 - 0.5) = 292.5
15	80	(30 + 40 + 50 + 50 + 40 + 45 + 50 + 50 + 40 + 40 + 40 + 55 + 55 + 70) (1 - 0.5) = 327.5
		(30 + 40 + 50 + 50 + 40 + 45 + 50 + 50 + 40 + 40 + 40 + 55 + 55 + 70 + 80) (1 - 0.5) = 367.5

FIG. 21 LOADING DETAILS

ANNEX B

(*Clause* 4.2)

NOTATIONS

A = Surface area of a structure or part of a structure

A_e = Effective frontal area

A_z = Effective frontal area of the building at height z

b = Breadth of a structure or structural member normal to the wind stream in the horizontal plane

B_s = Background factor

C_d = Drag coefficient

C_f = Force coefficient

C_{fn} = Normal force coefficient

C_{ft} = Transverse force coefficient

C_f' = Frictional drag coefficient

C_p = Pressure coefficient

C_{pe} = External pressure coefficient

C_{pi} = Internal pressure coefficient

C_{fs} = Cross-wind force spectrum coefficient

$C_{f,z}$ = Drag force coefficient of the building corresponding to the area A_z

C = Coefficient, which depends on q_s, used in the evaluation of k_3 factor

d = Depth of a structure or structural member parallel to wind stream in the horizontal plane

d_w = Wake width

D = Diameter of cylinder or sphere

E = Wind energy factor

F_z = Along wind load on the building/structure at any height z

F = Force normal to the surface

f_a = First mode natural frequency of the building/structure in along wind direction, in Hz

f_c = First mode natural frequency of the building/structure in across wind direction, in Hz

f_s = Vortex shedding frequency

F_n = Normal force

F_t = Transverse force

F' = Frictional force

G = Gust factor

g_R = Peak factor for resonant response

g_v = Peak factor for upwind velocity fluctuations

h = Height of structure above mean ground level

h_x = Height of development of a velocity profile at a distance x down wind from a change in terrain category

H_s = Height factor for resonant response

H = Height above mean ground level on the topography feature

I = Turbulence intensity

$I_{h,i}$ = Turbulence intensity at height h in terrain category i

$I_{z,i}$ = Turbulence intensity at height z in terrain category i

IF = Interference factor

k = Mode shape power exponent

k_1, k_2, k_3, k_4 = Wind speed modification factors

$\overline{k}_{2,i}$ = Hourly mean wind speed factor

K = Force coefficient multiplication factor for individual members of finite length

K_a = Area averaging factor

K_c = Combination factor

K_d = Wind directionality factor

l = Length of the member or larger horizontal dimension of a building

L = Actual length of upwind slope

L_e = Effective length of upwind slope

L_h = Integral turbulence length scale at the height, h

m_0 = Average mass per unit height of the structure

M_a = Design peak along wind base bending moment

M_c = Design peak across wind base bending moment

N = Effective reduced frequency

p_d = Design wind pressure

p_z = Design wind pressure at height z

$\overline{p}_d$ = Design hourly mean wind pressure corresponding to $\overline{V}_{z,d}$

p_e = External pressure

p_i = Internal pressure

r = Roughness factor which is twice the longitudinal turbulence intensity at height h, $I_{h,i}$

R_e = Reynolds number

s = Level on a building/structure for the evaluation of along wind load effects

S_o = Factor, which depends on H and X, used for the evaluation of k_3 factor

S_t = Strouhal number

S = Size reduction factor

V_b = Regional basic wind speed

V_z = Design wind speed at height z

$\overline{V}_d$ = Design hourly mean wind speed

$\overline{V}_{z,d}$ = Design hourly mean wind speed at height z

$\overline{V}_{z,H}$ = Hourly mean wind speed at height z

w = Lesser horizontal dimension of a building, or a structural member

w' = Bay width in multi-bay building

$\hat{\ddot{x}}$ = Peak acceleration at the top of the building/ structure in along wind direction, in m/s^2;

x = Distance down wind from a change in terrain category

X = Distance from the summit or crest of topography feature relative to the effective length, L_e

$\hat{\ddot{y}}$ = Peak acceleration at the top of the building/ structure in across wind direction

z = Height or distance above the ground

$z_{0,i}$ = Aerodynamic roughness height for i^{th} terrain

Z = Effective height of the topography feature

α = Inclination of the roof to the horizontal

β = Damping coefficient of the building/structure

η = Shielding factor

ϕ = Factor to account for the second order turbulence intensity

Φ = Solidity ratio

Φ_e = Effective solidity ratio

ε = Average height of the surface roughness

θ_s = Upwind slope of the topography feature in the wind direction

θ = Wind angle from a given axis

ANNEX C

(*Clause* 4.4.2)

BASIC WIND SPEED AT 10 m HEIGHT FOR SOME IMPORTANT CITIES/TOWNS

City/Town	*Basic Wind Speed m/s*	*City/Town*	*Basic Wind Speed m/s*
Agra	47	Delhi	50
Ahmedabad	39	Durgapur	47
Ajmer	47	Gangtok	47
Almora	47	Guwahati	50
Amritsar	50	Gaya	39
Asansol	47	Gorakhpur	47
Aurangabad	39	Hyderabad	44
Bahraich	47	Imphal	47
Barauni	47	Jabalpur	47
Bareilly	47	Jaipur	47
Bengaluru	33	Jamshedpur	47
Bhatinda	47	Jhansi	47
Bhilai	39	Jodhpur	47
Bhopal	47	Kanpur	47
Bhubaneswar	50	Kohima	44
Bhuj	50	Kolkata	50
Bikaner	47	Kozhikode	39
Bokaro	47	Kurnool	39
Chandigarh	47	Lakshadweep	39
Chennai	50	Lucknow	50
Coimbatore	39	Ludhiana	47
Cuttack	50	Madurai	39
Darbhanga.	55	Mandi	39
Darjeeling	47	Mangaluru	39
Dehra Dun	47	Moradabad	47

City/Town	*Basic Wind Speed m/s*
Mumbai	44
Mysuru	33
Nagpur	44
Nainital	47
Nashik	39
Nellore	50
Panaji	39
Patiala	47
Patna	47
Port Blair	44
Puducherry	50
Pune	39
Raipur	44
Rajkot	39
Ranchi	39
Roorkee	39
Rourkela	39
Shimla	39
Srinagar	39
Surat	44
Tiruchirappalli	47
Thiruvananthpuram	39
Udaipur	47
Vadodara	44
Varanasi	47
Vijayawada	50
Visakhapatnam	50

ANNEX D

[*Clause* 4.4.3.2.4 (2) (ii)]

CHANGES IN TERRAIN CATEGORIES

D-1 LOW TO HIGH TERRAIN CATEGORY NUMBER

In cases of transition from a low terrain category number (corresponding to a low terrain roughness) to a higher terrain category number (corresponding to a rougher terrain), the velocity profile over the rougher terrain shall be determined as follows:

a) Below height h_x, the velocities shall be determined in relation to the rougher terrain; and

b) Above height h_x, the velocities shall be determined in relation to the less rough (more distant) terrain.

D-2 HIGH TO LOW TERRAIN CATEGORY NUMBER

In cases of transition from a more rough to a less rough terrain, the velocity profile shall be determined as follows:

a) Above height h_x, the velocities shall be determined in accordance with the rougher (more distant) terrain; and

b) Below height h_x, the velocity shall be taken as the lesser of the following:

1) That determined in accordance with the less rough terrain, and

2) The velocity at height h_x as determined in relation to the rougher terrain

NOTE — Examples of determination of velocity profiles in the vicinity of a change in terrain category are shown in Fig. 22A and Fig. 22B.

D-3 MORE THAN ONE CATEGORY

Terrain changes involving more than one category shall be treated in similar way to that described in **D-1** and **D-2**.

NOTE — Examples involving three terrain categories are shown in Fig. 22B.

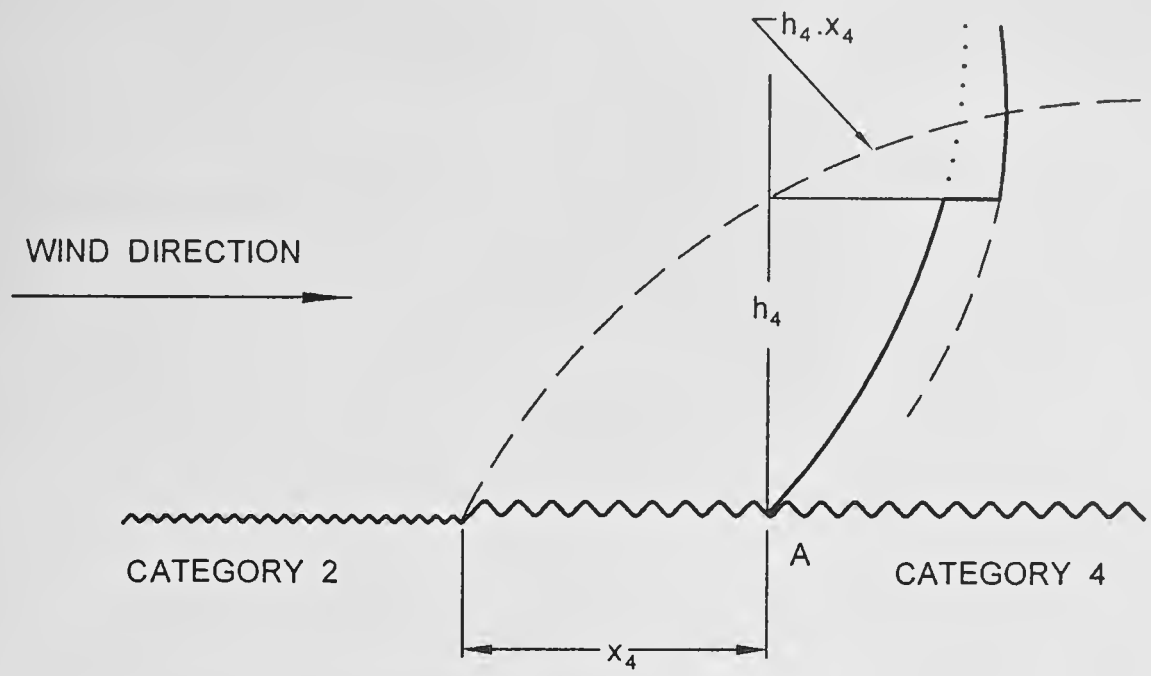

x_4 = FETCH, h_4 = HEIGHT FOR CATEGORY 4

· · · · · · · · · · · · · PROFILE FOR CATEGORY 4

– — — — – PROFILE FOR CATEGORY 2

———————— DESIGN PROFILE AT A

22A DETERMINATION OF VELOCITY PROFILE NEAR A CHANGE IN TERRAIN CATEGORY
(Less rough to more rough)

x_4 = FETCH, h_4 = HEIGHT FOR CATEGORY 2

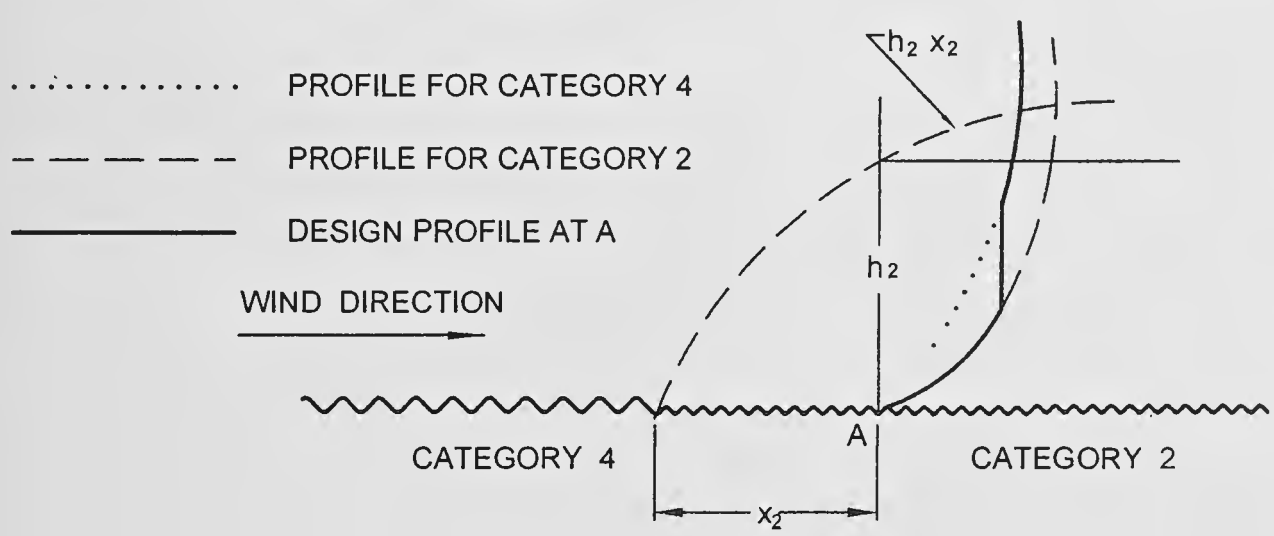

22B DETERMINATION OF VELOCITY PROFILE NEAR A CHANGE IN TERRAIN CATEGORY
(More rough to less rough)

FIG. 22 VELOCITY PROFILES IN THE VICINITY OF A CHANGE IN TERRAIN CATEGORY — (*Continued*)

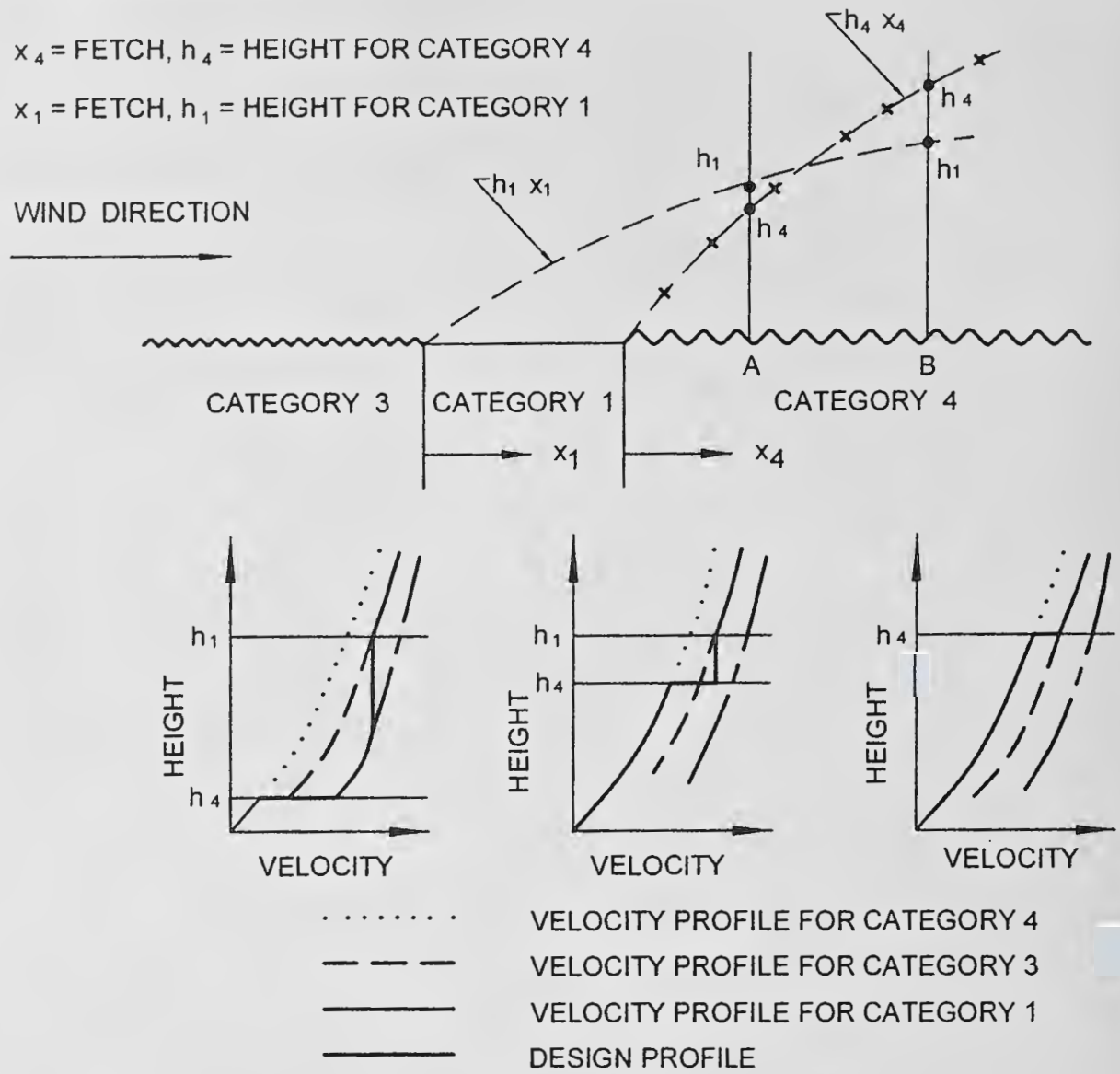

22C DETERMINATION OF DESIGN PROFILE MORE THAN ONE CHANGE TERRAIN CATEGORY

FIG. 22 VELOCITY PROFILES IN THE VICINITY OF A CHANGE IN TERRAIN CATEGORY

ANNEX E

(*Clause* 4.4.3.3)

EFFECT OF A CLIFF OR ESCARPMENT ON EQUIVALENT HEIGHT ABOVE GROUND (k_3 FACTOR)

E-1 The influence of the topographic feature is considered to extend 1.5 L_e upwind and 2.5 L_e downwind of the summit of crest of the feature where L_e is the effective horizontal length of the hill depending on slope as indicated below (*see* Fig. 23):

Slope	L_e
$3° < \theta_s \leq 17°$	L
$\theta_s > 17°$	$Z / 0.3$

where

L = actual length of the upwind slope in the wind direction,

Z = effective height of the topography feature, and

θ_s = upwind slope in the wind direction.

In case, the zone in downwind side of the crest of the feature is relatively flat ($\theta_s < 3°$) for a distance exceeding L_e, then the feature should be treated as an escarpment. Otherwise the feature should be treated as a hill or ridge. Examples of typical features are given in Fig. 23.

NOTES

1 No difference is made, in evaluating k_3 between a three dimensional hill and two dimensional ridge.

2 In undulating terrain, it is often not possible to decide whether the local topography to the site is significant in terms of wind flow. In such cases, the average value of the terrain upwind of the site for a distance of 5 km should be taken as the base level from wind to assess the height, Z, and the upwind slope θ. of the feature.

E-2 TOPOGRAPHY FACTOR, K_3

The topography factor K_3 is given by the following:

$$K_3 = 1 + C\, s_0$$

where C has the following values:

Slope	*C*
$3° < \theta_s \leq 17°$	1.2 (Z/L)
$\theta_s > 17°$	0.36

and s_0 is a factor derived in accordance with **E-2.1** appropriate to the height, H above mean ground level and the distance, X, from the summit or crest relative to the effective length, L_e

E-2.1 The factor, s_0 should be determined from:

a) Figure 24 for cliffs and escarpments, and

b) Figure 25 for ridges and hills.

NOTE — Where the downwind slope of a hill or ridge is more than 3°, there will be large regions of reduced accelerations or even shelter and it is not possible to give general design rules to cater for these circumstances. Values of s_0 from Fig. 25 may be used as upper bound values.

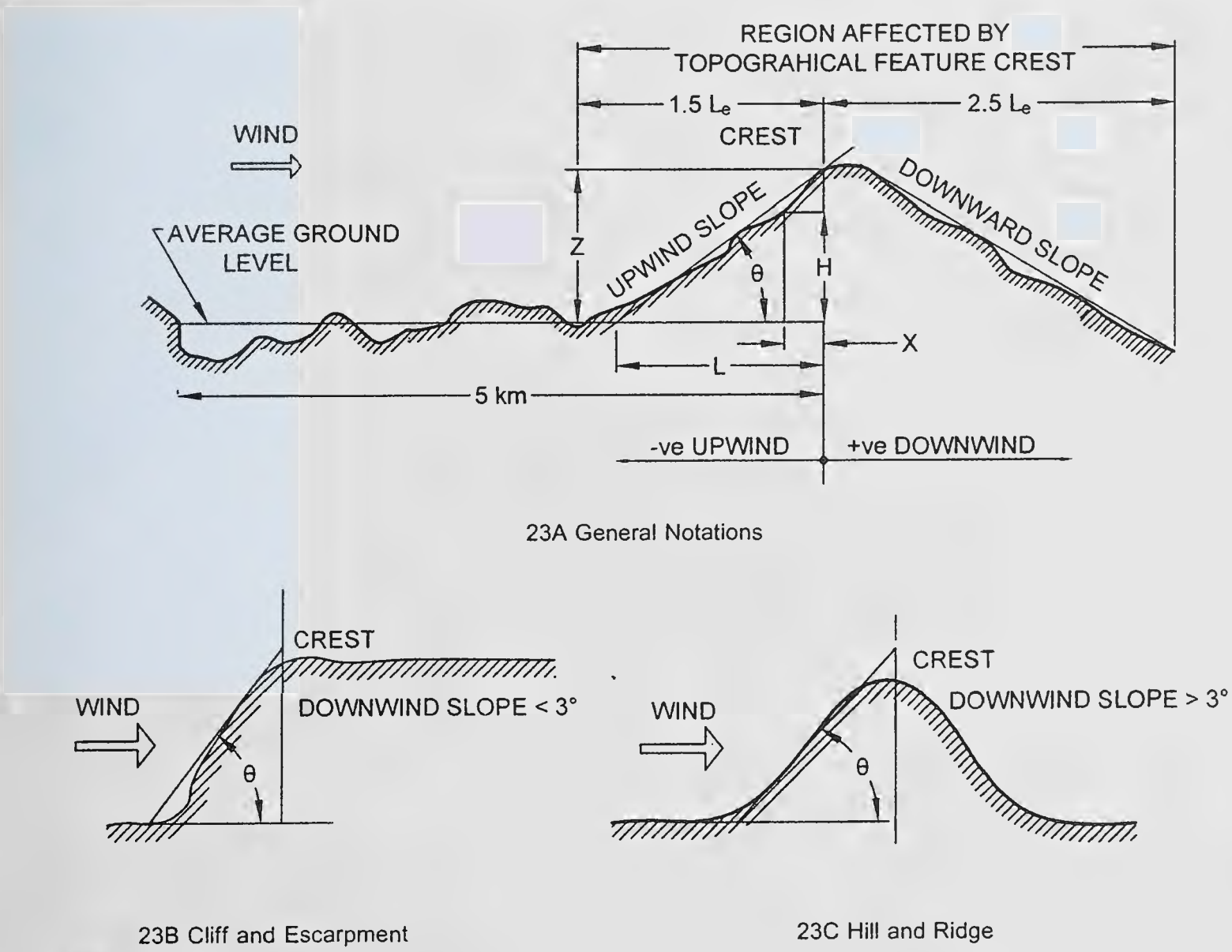

FIG. 23 DEFINITION OF TOPOGRAPHICAL DIMENSIONS

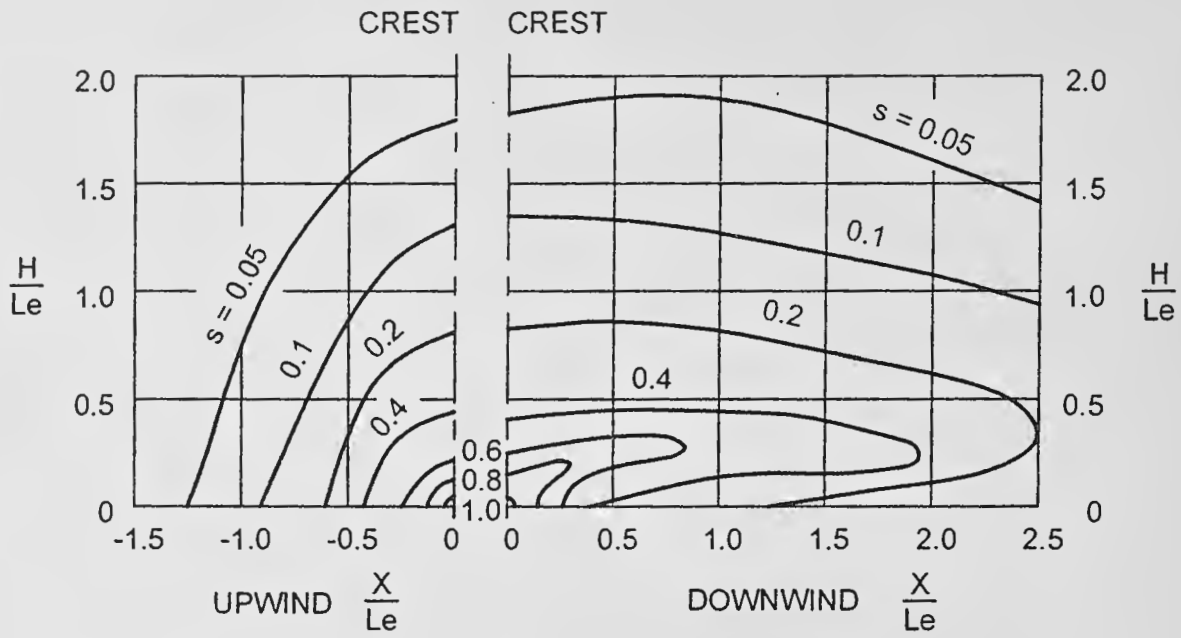

FIG. 24 FACTOR S_0 FOR CLIFF AND ESCARPMENT

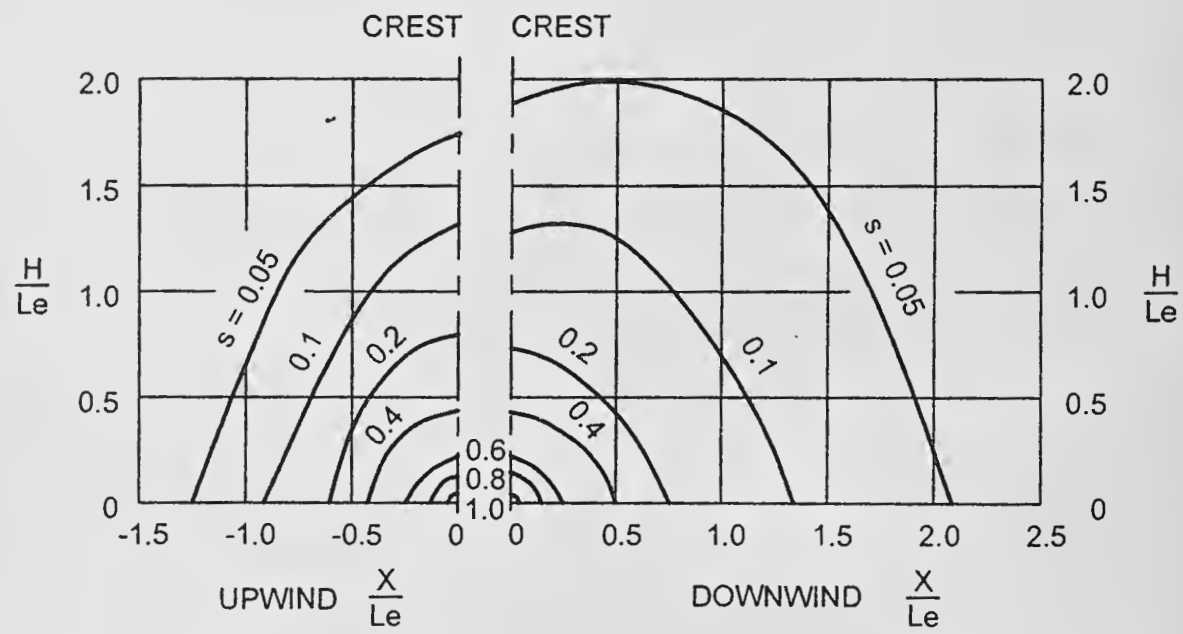

FIG. 25 FACTOR S_0 FOR RIDGE AND HILL

ANNEX F

[*Clauses* 4.5.4.2.2, 4.5.4.3.2 (c) *and* 4.5.4.3.3]

WIND FORCE ON CIRCULAR SECTIONS

F-1 The wind force on any object is given by:

$$F = C_f A_e \rho_d$$

where

C_f = force coefficient;

A_e = effective area of the object normal to the wind direction; and

ρ_d = design pressure of the wind.

For most shapes, the force coefficient remains approximately constant over the whole range of wind speeds likely to be encountered. However, for objects of circular cross-section, it varies considerably.

For a circular section, the force coefficient depends on the way in which the wind flows around it and is dependent upon the velocity and kinematic viscosity of the wind and diameter of the section. The force coefficient is usually quoted against a non-dimensional parameter, called the Reynolds number, which takes into account of the velocity and viscosity of the flowing medium (in this case the wind), and the member diameter.

$$\text{Reynolds number, } R_e = \frac{D\bar{V}_d}{\nu}$$

where

D = diameter of the member,

$\bar{V}_d$ = design hourly mean wind speed, and

ν = kinematic viscosity of the air which is 1.46×10^{-5} m²/s at 15°C and standard atmospheric pressure.

Since in most natural environments likely to be found in India, the kinematic viscosity of the air is fairly constant, it is convenient to use $D\bar{V}_d$ as the parameter instead of Reynolds number and this has been done in this Section.

The dependence of a circular section's force coefficient on Reynolds number is due to the change in the wake developed behind the body.

At a low Reynolds number, the wake is as shown in Fig. 26 and the force coefficient is typically 1.2. As Reynolds number is increased, the wake gradually changes to that shown in Fig. 27, that is, the wake width d_w decreases and the separation point, denoted as *sp*, moves from front to the back of the body.

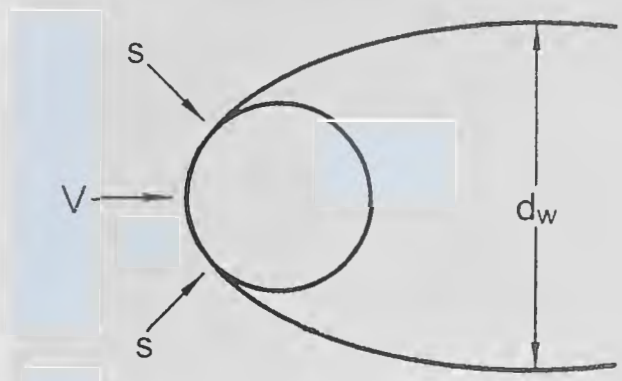

FIG. 26 WAKE IN SUB-CRITICAL FLOW

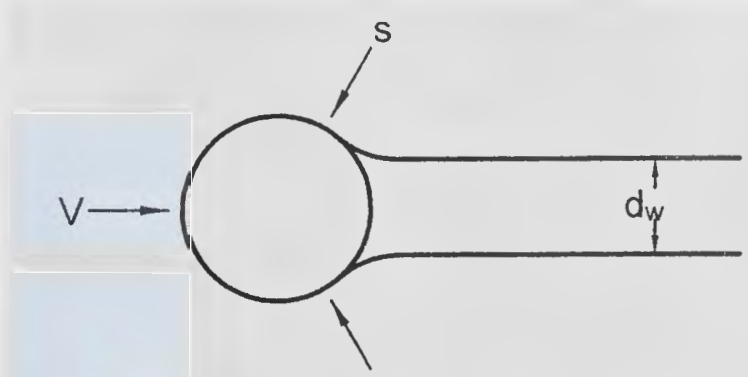

FIG. 27 WAKE IN SUPER-CRITICAL FLOW

As a result, the force coefficient shows a rapid drop at a critical value of Reynolds number followed by a gradual rise as Reynolds number is increased still further.

The variation of C_f with parameter $D\bar{V}_d$ is shown in Fig. 5 for infinitely long circular cylinders having various values of relative surface roughness (ε/D) when subjected to wind having an intensity and scale of turbulence typical of built-up urban areas. The curve for a smooth cylinder ($\varepsilon/D = 1 \times 10^{-5}$) in a steady air stream, as found in a low-turbulence wind tunnel, is also shown for comparison.

It can be seen that the main effect of free-stream turbulence is to decrease the critical value of the parameter. For subcritical flows, turbulence can produce a considerable reduction in C_f below the steady air-stream values. For supercritical flows, this effect becomes significantly smaller.

If the surface of the cylinder is deliberately roughened, such as by incorporating flutes, riveted construction, etc, then the data given in Fig. 5 for appropriate value of $\varepsilon/D > 0$ shall be used.

NOTE — In case of uncertainty regarding the value of e to be used for small roughness, ε/D shall be taken as 0.001.

ANNEX G

(*Clause* 5)

SYMBOLS

G -1 The symbols and notations given below apply to the provisions of **5** of this Code:

A_h = Design horizontal earthquake acceleration coefficient

A_k = Design horizontal earthquake acceleration spectrum value for mode k of oscillation

b_i = Plan dimension of floor i of the building, perpendicular to direction of earthquake shaking

C = Index for the closely-spaced modes

d = Base dimension (in metre) of the building in the direction in which the earthquake shaking is considered

DL = Response quantity due to dead load

e_{di} = Design eccentricity to be used at floor i calculated as per **5.4.8.2**

e_{si} = Static eccentricity at floor i defined as the distance between centre of mass and centre of resistance

EL_X = Response quantity due to earthquake load for horizontal shaking along X-direction

EL_Y = Response quantity due to earthquake load for horizontal shaking along Y-direction

EL_Z = Response quantity due to earthquake load for horizontal shaking along Z-direction

F_{roof} = Design lateral forces at the roof due to all modes considered

F_i = Design lateral forces at the floor i due to all modes considered

g = Acceleration due to gravity

h = Height (in metre) of structure

h_i = Height measured from the base of the building to floor i

I = Importance factor

IL = Response quantity due to imposed load

K_i = Lateral translational stiffness of storey i

L = Dimension of a building in a considered direction

M_k = Modal mass of mode k

n = Number of storeys or floors

N = Corrected SPT value for soil

N_m = Number of modes to be considered as per **5.4.7.5.2**

P_k = Mode participation factor of mode k

Q_i = Lateral force at floor i

Q_{ik} = Design lateral force at floor i in mode k

R = Response reduction factor

S_a/g = Design / Response acceleration coefficient for rock or soil sites as given by Fig. 12 and **5.3.4.2** based on appropriate natural period

S_i = Lateral shear strength of storey i

T = Undamped natural period of oscillation of the structure (in second)

T_a = Approximate fundamental period (in second)

T_k = Undamped natural period of mode k of oscillation (in second)

T_1 = Fundamental natural period of oscillation (in second)

V_B = Design seismic base shear

$\overline{V}_B$ = Design base shear calculated using the approximate fundamental period T_a

V_i = Peak storey shear force in storey i due to all modes considered

V_{ik} = Shear force in storey i in mode k

V_{roof} = Peak storey shear force in the top storey due to all modes considered

W = Seismic weight of the building

W_i = Seismic weight of floor i

Z = Seismic zone factor

ϕ_{ik} = Mode shape coefficient at floor i in mode k

λ = Peak response (for example, member forces, displacements, storey forces, storey shears or base reactions) due to all modes considered

λ_k = Absolute value of maximum response in mode k

λ_c = Absolute value of maximum response in mode c, where mode c is a closely-spaced mode

λ^* = Peak response due to the closely-spaced modes only

ρ_{ji} = Coefficient used in complete quadratic combination (CQC) method while combining responses of modes i and j

ω_i = Circular frequency (in rad/s) in mode i

ANNEX H

(*Clause* 5.1.11)

MSK 1964 INTENSITY SCALE

H-1 The following description shall be applicable.

a) *Type of Structures (Buildings)*

1) *Type A* — Building in field-stone, rural structures, un-burnt brick houses, clay houses

2) *Type B* — Ordinary brick buildings, buildings of large block and prefabricated type, half timbered structures, buildings in natural hewn stone

3) *Type C* — Reinforced buildings, well-built wooden structures

b) *Definition of Quantity*

1) Single, few : About 5 percent

2) Many : About 50 percent

3) Most : About 75 percent

c) *Classification of Damage to Buildings*

Classification	*Damage*	*Description*
Grade 1	Slight damage	Fine cracks in plaster; fall of small pieces of plaster
Grade 2	Moderate	Small cracks in walls; damage fall of fairlylarger pieces of plaster; pantiles slip off; cracks in chimneys parts of chimney fall down
Grade 3	Heavy damage	Large and deep cracks in walls; fall of chimneys
Grade 4	Destruction	Gaps in walls; parts of buildings may collapse; separate parts of the buildings lose their cohesion; and inner walls collapse
Grade 5	Total damage	Total collapse of the buildings

H-2 MSK INTENSITY SCALE

H-2.1 The following introductory letters (i), (ii) and (iii) have been used throughout the intensity scales (I to XII), describing the following:

i) Persons and surroundings,

ii) Structures of all kinds, and

iii) Nature.

I Not Noticeable

i) The intensity of the vibration is below the limits of sensibility; the tremor is detected and recorded by seismograph only.

ii) —

iii) —

II Scarcely Noticeable (Very Slight)

i) Vibration is felt only by individual people at rest in houses, especially on upper floors of buildings.

ii) —

iii) —

III Weak, Partially Observed

i) The earthquake is felt indoors by a few people, outdoors only in favourable circumstances. The vibration is like that due to the passing of a light truck. Attentive observers notice a slight swinging of hanging objects.

ii) —

iii) —

IV Largely Observed

i) The earthquake is felt indoors by many people, outdoors by few. Here and there people awake, but no one is frightened. The vibration is like that due to the passing of a heavily loaded truck. Windows, doors, and dishes rattle. Floors and walls crack. Furniture begins to shake. Hanging objects swing slightly. Liquid in open vessels are slightly disturbed. In standing motor cars the shock is noticeable.

ii) —

iii) —

V Awakening

i) The earthquake is felt indoors by all, outdoors by many. Many people awake. A few run outdoors. Animals become uneasy. Buildings tremble throughout. Hanging objects swing considerably. Pictures knock against walls or swing out of place. Occasionally pendulum clocks stop. Unstable objects overturn or shift. Open doors and windows are thrust open and slam back again. Liquids spill in small amounts from well-filled open containers. The

sensation of vibration is like that due to heavy objects falling inside the buildings.

ii) Slight damages in buildings of Type A are possible.

iii) Slight waves on standing water. Sometimes changes in flow of springs.

VI Frightening

i) Felt by most indoors and outdoors. Many people in buildings are frightened and run outdoors. A few persons loose their balance. Domestic animals run out of their stalls. In few instances, dishes and glassware may break, and books fall down, pictures move, and unstable objects overturn. Heavy furniture may possibly move and small steeple bells may ring.

ii) Damage of Grade 1 is sustained in single buildings of Type B and in many of Type A. Damage in some buildings of Type A is of Grade 2.

iii) Cracks up to widths of 10 mm possible in wet ground; in mountains occasional landslips: change in flow of springs and in level of well water are observed.

VII Damage of Buildings

i) Most people are frightened and run outdoors. Many find it difficult to stand. The vibration is noticed by persons driving motor cars. Large bells ring.

ii) In many buildings of Type C damage of Grade 1 is caused; in many buildings of Type B damage is of Grade 2. Most buildings of Type A suffer damage of Grade 3, few of Grade 4. In single instances, landslides of roadway on steep slopes: crack in roads; seams of pipelines damaged; cracks in stone walls.

iii) Waves are formed on water, and water is made turbid by mud stirred up. Water levels in wells change, and the flow of springs changes. Sometimes dry springs have their flow restored and existing springs stop flowing. In isolated instances parts of sand and gravelly banks slip off.

VIII Destruction of Buildings

i) Fright and panic; also persons driving motor cars are disturbed. Here and there branches of trees break off. Even heavy furniture moves and partly overturns. Hanging lamps are damaged in part.

ii) Most buildings of Type C suffer damage of Grade 2, and few of Grade 3. Most buildings of Type B suffer damage of Grade 3. Most buildings of Type A suffer damage of Grade 4. Occasional breaking of pipe seams. Memorials and monuments move and twist. Tombstones overturn. Stone walls collapse.

iii) Small landslips in hollows and on banked roads on steep slopes; cracks in ground up to widths of several centimetres. Water in lakes become turbid. New reservoirs come into existence. Dry wells refill and existing wells become dry. In many cases, change in flow and level of water is observed.

IX General Damage of Buildings

i) General panic; considerable damage to furniture. Animals run to and fro in confusion and cry.

ii) Many buildings of Type C suffer damage of Grade 3, and a few of Grade 4. Many buildings of Type B show a damage of Grade 4 and a few of Grade 5. Many buildings of Type A suffer damage of Grade 5. Monuments and columns fall. Considerable damage to reservoirs; underground pipes partly broken. In individual cases, railway lines are bent and roadway damaged.

iii) On flat land overflow of water, sand and mud is often observed. Ground cracks to widths of up to 100 mm, on slopes and river banks more than 100 mm. Furthermore, a large number of slight cracks in ground; falls of rock, many landslides and earth flows; large waves in water. Dry wells renew their flow and existing wells dry up.

X General Destruction of Buildings

i) —

ii) Many buildings of Type C suffer damage of Grade 4, and a few of Grade 5. Many buildings of Type B show damage of Grade 5. Most of Type A has destruction of Grade 5. Critical damage to dykes and dams. Severe damage to bridges. Railway lines are bent slightly. Underground pipes are bent or broken. Road paving and asphalt show waves.

iii) In ground, cracks up to widths of several centimetres, sometimes up to 1 m, parallel to water courses occur broad fissures. Loose ground slides from steep slopes. From river banks and steep coasts, considerable landslides are possible. In coastal areas, displacement of sand and mud; change of water level in wells; water from canals, lakes, rivers, etc, thrown on land. New lakes occur.

XI Destruction

i) —

ii) Severe damage even to well-built buildings, bridges, water dams and railway lines. Highways become useless. Underground pipes destroyed.

iii) Ground considerably distorted by broad cracks and fissures, as well as movement in horizontal and vertical directions. Numerous landslips and falls of rocks. The intensity of the earthquake requires to be investigated specifically.

XII Landscape Changes

i) —

ii) Practically all structures above and below ground are greatly damaged or destroyed.

iii) The surface of the ground is radically changed. Considerable ground cracks with extensive vertical and horizontal movements are observed. Falling of rock and slumping of river banks over wide areas, lakes are dammed; waterfalls appear and rivers are deflected. The intensity of the earthquake requires to be investigated specially.

ANNEX J

(*Clauses* 5.1.12 *and* 5.3.3.5.3)

SIMPLIFIED PROCEDURE FOR EVALUATION OF LIQUEFACTION POTENTIAL

J-1 Due to the difficulties in obtaining and testing undisturbed representative samples from potentially liquefiable sites, *in-situ* testing is the approach preferred widely for evaluating the liquefaction potential of a soil deposit. Liquefaction potential assessment procedures involving both the SPT and CPT are widely used in practice. The most common procedure used in engineering practice for the assessment of liquefaction potential of sands and silts is the simplified procedure. The procedure may be used with either standard penetration test (SPT) blow count or cone penetration test (CPT) tip resistance or shear wave velocity V_s measured within the deposit as described below:

Step 1 — The subsurface data used to assess liquefaction susceptibility should include the location of the water table, either SPT blow count N or tip resistance q_c of a CPT cone or shear wave velocity V_s, unit weight, and fines content of the soil (percent by weight passing the IS Sieve No. 75μ).

Step 2 — Evaluate total vertical overburden stress σ_{vo} and effective vertical overburden stress σ'_{vo} at different depths for all potentially liquefiable layers within the deposit.

Step 3 — Evaluate stress reduction factor r_d using:

$$r_d = \begin{cases} 1 - 0.007\,65z & 0 < z \le 9.15 \text{ m} \\ 1.174 - 0.026\,7z & 9.15 < z \le 23.0 \text{ m} \end{cases}$$

where z is the depth (in metre) below the ground surface.

Step 4 — Calculate cyclic stress ratio CSR induced by the earthquake using:

$$CSR = 0.65\left(\frac{a_{max}}{g}\right)\left(\frac{\sigma_{vo}}{\sigma'_{vo}}\right)r_d,$$

where

a_{max} = peak ground acceleration (PGA) preferably in terms of g,

g = acceleration due to gravity, and

r_d = stress reduction factor.

If value of PGA is not available, the ratio (a_{max}/g) may be taken equal to seismic zone factor Z (as per Table 42).

Step 5 — Obtain cyclic resistance ratio CRR by correcting standard cyclic resistance ratio $CRR_{7.5}$ for earthquake magnitude, high overburden stress level and high initial static shear stress using:

$$CRR = CRR_{7.5}\,(MSF)\,K_\sigma K_\alpha,$$

where

$CRR_{7.5}$ = standard cyclic resistance ratio for a 7.5 magnitude earthquake obtained using values of SPT or CPT or shear wave velocity (as per Step 6), and

MSF = magnitude scaling factor given by following equation:

$$MSF = 10^{2.24}/M_W^{2.56}$$

This factor is required when the magnitude is different than 7.5. The correction for high overburden stresses K_σ is required when overburden pressure is high (depth > 15 m) and can be found using following equation:

$$K_\sigma = (\sigma'_{vo}/P_a)^{(f-1)}$$

where σ'_{vo} effective overburden pressure and P_a atmospheric pressure are measured in the same units and f is an exponent and its value depends on the relative density D_r. For D_r = 40 percent ~ 60 percent, f = 0.8 ~ 0.7 and for D_r = 60 percent ~ 80 percent, f = 0.7 ~ 0.6. The correction for static shear stresses K_α is required only for sloping ground and is not required in routine engineering practice. Therefore, in the scope of this Section, value of K_α shall be assumed unity.

For assessing liquefaction susceptibility using:

a) SPT, go to Step 6(a) or
b) CPT, go to Step 6(b) or
c) Shear wave velocity, go to Step 6(c).

Step 6 — Obtain cyclic resistance ratio, $CRR_{7.5}$

6(a) *Using values of SPT*

Evaluate the SPT (standard penetration test) blow count N_{60}, for a hammer efficiency of 60 percent. Specifications for standardized equipment are given in Table 50. If equipment used is of non-standard type, N_{60} shall be obtained using measured value (N):

$$N_{60} = NC_{60},$$

where

$$C_{60} = C_{HT}C_{HW}C_{SS}C_{RL}C_{BD}$$

Factors C_{HT}, C_{Hw}, C_{SS}, C_{RL}, and C_{BD}, recommended by various investigators for some common non-standard SPT configurations are provided in Table 51. For SPT conducted as per accepted standard [6-1(29)], the energy delivered to the drill rod is about 60 percent therefore, C_{60} may be assumed as 1. The computed N_{60}, is normalized to an effective overburden pressure of approximately 100 kPa using overburden correction factor C_N, using:

$$(N_1)_{60} = C_N N_{60}$$

where

$$C_N = \sqrt{\frac{P_a}{\sigma'_{vo}}} \le 1.7,$$

The cyclic resistance ratio $CRR_{7.5}$ is estimated from Fig. 28, using $(N_1)_{60}$ value.

Effect of fines content FC (in percent) can be rationally accounted by correcting $(N_1)_{60}$ and finding $(N_1)_{60CS}$ as follows:

$$(N_1)_{60CS} = \alpha + \beta(N_1)_{60}$$

where

$\alpha = 0$	$\beta = 1$	for $FC \le 5$ percent
$\alpha = e^{\left[1.76-\left(\frac{190}{FC^2}\right)\right]}$	$\beta = 0.99 + \frac{FC^{1.5}}{1\,000}$	for 5 percent $< FC < 35$ percent
$\alpha = 0.5$	$\beta = 1.2$	for $FC \ge 35$ percent

Again, Fig. 28 can be used to estimate $CRR_{7.5}$, where $(N_1)_{60,CS}$ shall be used instead of $(N_1)_{60}$ and only SPT clean sand based curve shall be used irrespective of fines contents. The $CRR_{7.5}$ can be estimated using following equation, instead of Fig. 28:

$$CRR_{7.5} = \frac{1}{34-(N_1)_{60CS}} + \frac{(N_1)_{60CS}}{135} + \frac{50}{\left[10\times(N_1)_{60CS}+45\right]^2} - \frac{1}{200}$$

6(b) *Using values of CPT*

The CPT procedure requires normalization of measured cone tip resistance q_c using atmospheric pressure P_a and correction for overburden pressure C_Q as follows:

$$q_{CIN} = C_Q\left(\frac{q_c}{P_a}\right)$$

where q_{cIN} is normalized dimensionless cone penetration resistance and

$$C_Q = \left(\frac{P_a}{\sigma'_{vo}}\right)^n$$

$$n = \begin{cases} 0.5 & \text{for sand,} \\ 1 & \text{for clay.} \end{cases}$$

The normalized penetration resistance q_{CIN} for silty sands is corrected to an equivalent clean sand value $(q_{CIN})_{CS}$ by the following relation:

$$(q_{CIN})_{CS} = k_C q_{CIN}$$

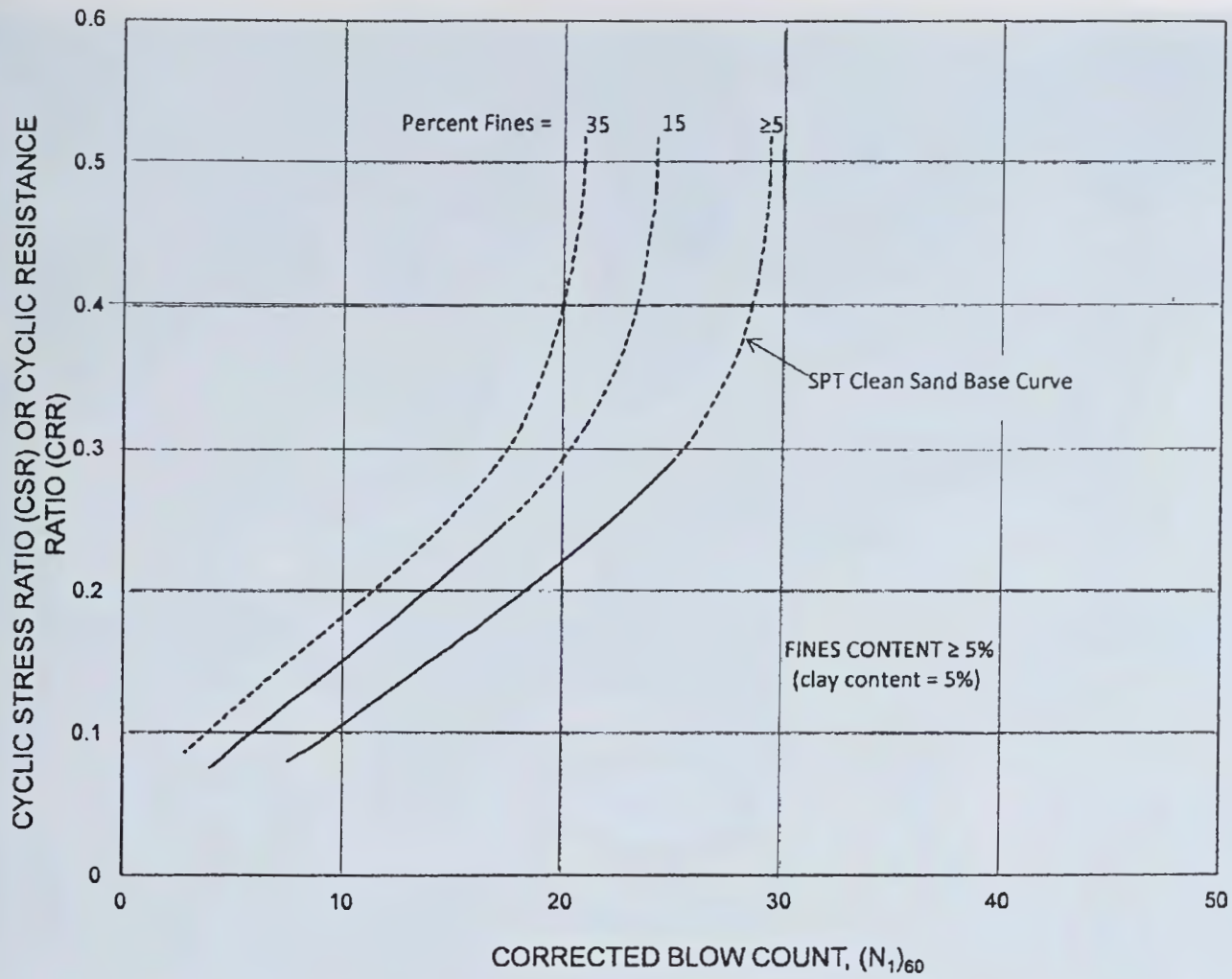

FIG. 28 RELATION BETWEEN CRR AND $(N_1)_{60}$ FOR SAND FOR M_w 7.5 EARTHQUAKES

where

k_c = Correction factor to account for grain characteristics

$$= \begin{cases} 1.0 \quad (\text{for } I_c \le 1.64) \\ -0.403I_c^4 + 5.581I_c^3 - 21.63I_c^2 + \\ 33.75I_c - 17.88 \quad (\text{for } I_c > 1.64), \text{ and} \end{cases}$$

$$I_c = \sqrt{(3.47 - \log Q)^2 + (1.22 - \log F)^2}$$

$$Q = \left(\frac{q_c - \sigma_{vo}}{P_a}\right)\left(\frac{P_a}{\sigma'_{vo}}\right)^n$$

$$F = 100\left(\frac{f_s}{q_c - \sigma_{vo}}\right) \text{ percent, and}$$

where f_s = measured sleeve friction.

Using $(q_{CIN})_{CS}$ find the value of $CRR_{7.5}$ using Fig. 29. Alternatively, the $CRR_{7.5}$ can be found using following equations:

$$CRR_{7.5} = \begin{cases} 0.833\left(\dfrac{(q_{CIN})_{CS}}{1\,000}\right) + 0.05, & 0 < (q_{CIN})_{CS} < 50 \\ 93\left(\dfrac{(q_{CIN})_{CS}}{1\,000}\right)^3 + 0.08, & 50 \le (q_{CIN})_{CS} < 160 \end{cases}$$

6(c) *Using shear wave velocity*

Apply correction for overburden stress to shear wave velocity V_s for clean sands using:

$$V_{s1} = \left(\frac{P_a}{\sigma'_{vo}}\right)^{0.25} V_s$$

where (V_{s1}) is overburden stress corrected shear wave velocity. Using V_{s1} find the value of $CRR_{7.5}$ using Fig. 30. Alternatively, the $CRR_{7.5}$ can be found using following equation:

$$CRR_{7.5} = a\left(\frac{V_{s1}}{100}\right)^2 + b\left(\frac{1}{V^*_{s1} - V_{s1}} - \frac{1}{V^*_{s1}}\right)$$

where V^*_{s1} is limiting upper value of V_{s1} for liquefaction occurrence; a and b are curve fitting parameters. The values of a and b in Fig. 30 are 0.022 and 2.8, respectively. V^*_{s1} can be assumed to vary linearly from 200 m/s for soils with fine content of 35 percent, to 215 m/s for soils with fine contents of 5 percent or less.

Step 7 — Calculate the factor of safety FS against initial liquefaction using:

$$FS = \frac{CRR}{CSR},$$

where CSR is as estimated in Step 4 and CRR in Step 5. When the design ground motion is conservative, earthquake related permanent ground deformation is generally small, if $FS \ge 1.2$.

Step 8 — If $FS < 1$, then the soil is assumed to liquefy.

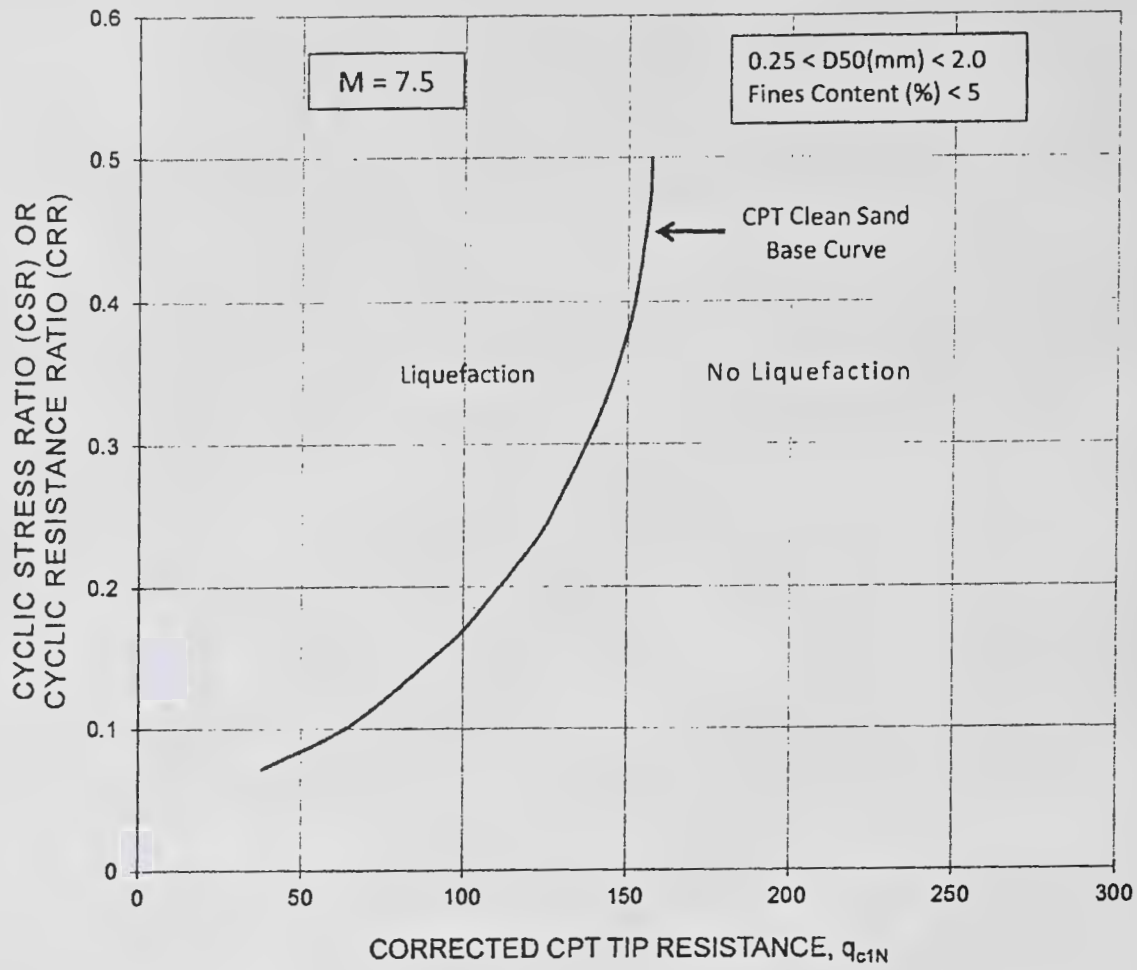

FIG. 29 RELATION BETWEEN *CRR* AND $(q_{C1N})_{cs}$ FOR M_w 7.5 EARTHQUAKES

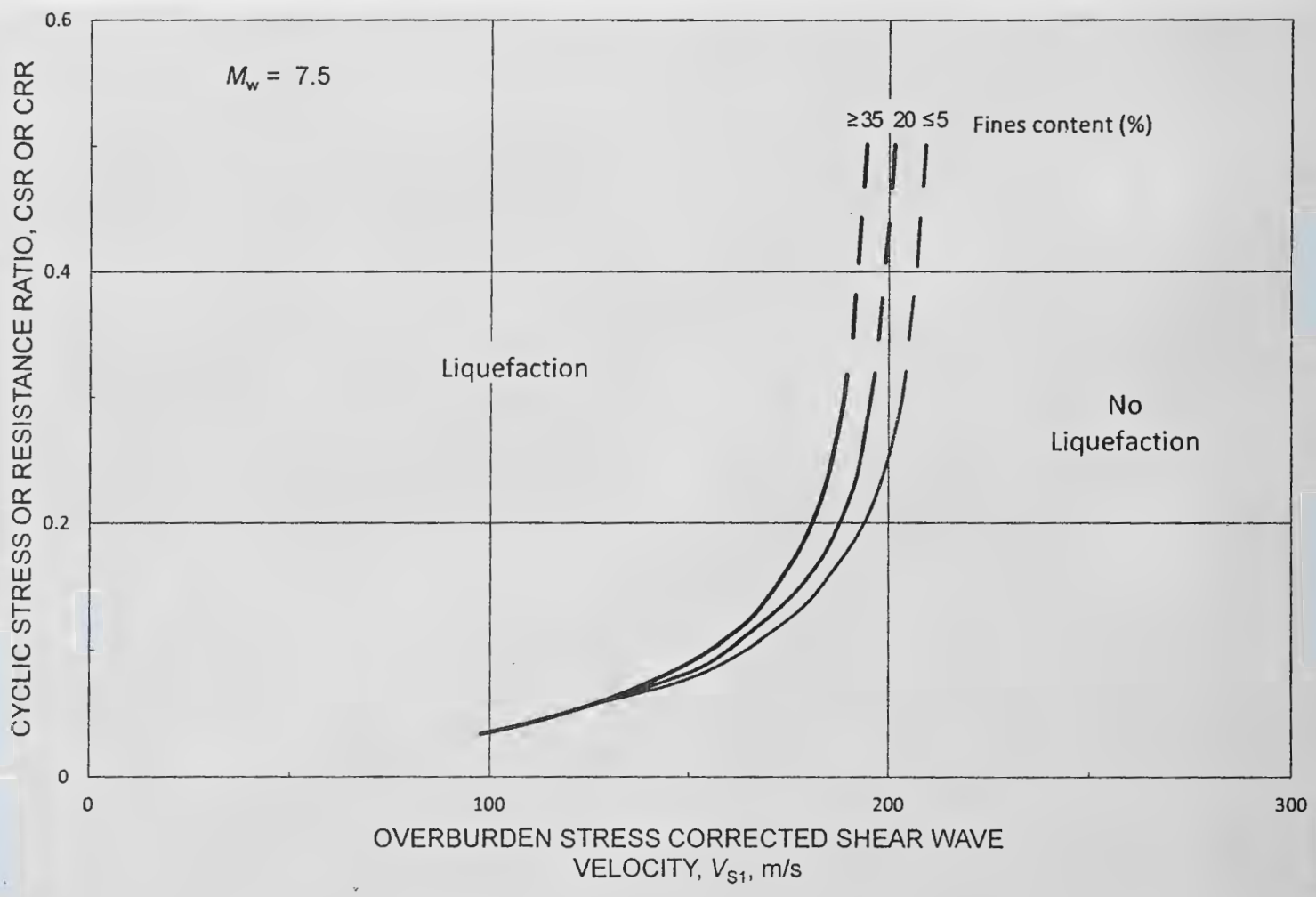

FIG. 30 RELATION BETWEEN *CRR* AND V_{s1} FOR M_w 7.5 EARTHQUAKES

Table 50 Recommended Standardized SPT Equipment {*see* Accepted Standard [6-1(29)]}

[*Clause* J-1, *Step*: 6(a)]

Sl No.	Element	Standard Specification
(1)	(2)	(3)
i)	Sampler	Standard split-spoon sampler with, Outside diameter, *OD* = 51 mm; and Inside diameter, *ID* = 35 mm (constant, that is, no room for liners in the barrel).
ii)	Drill rods	*A* or *AW* type for depths less than 15.2 m; *N* or *NW* type for greater depths
iii)	Hammer	Standard (safety) hammer with, a) weight = 63.5 kg; and b) drop height = 762 mm (delivers 60 percent of theoretical free fall energy)
iv)	Rope	Two wraps of rope around the pulley
v)	Borehole	100-130 mm diameter rotary borehole with bentonite mud for borehole stability (hollow stem augers where SPT is taken through the stem)
vi)	Drill bit	Upward deflection of drilling mud (tricone or baffled drag bit)
vii)	Blow count rate	30 to 40 blows per minute
viii)	Penetration resistant count	Measured over range of 150 mm – 450 mm of penetration into the ground

Table 51 Correction Factors for Non-Standard SPT Procedures and Equipment

[*Clause* J-1, Step: 6(a)]

Sl No.	Correction for	Correction Factor
(1)	(2)	(3)
i)	Non-standard hammer type	$C_{HT} = \begin{cases} 0.75 & \text{(for Donut hammer with rope and pulley)} \\ 1.33 & \text{(for Donut hammer with trip/auto)} \end{cases}$ and Energy ratio = 80 percent,
ii)	Non-standard hammer weight or height of fall	$C_{HW} = \dfrac{HW}{48\ 387}$ where H = height of fall (mm), and W = hammer weight (kg)
iii)	Non-standard sampler setup (standard samples with room for liners, but used without liners)	$C_{SS} = \begin{cases} 1.1 & \text{(for loose sand)} \\ 1.2 & \text{(for dense sand)} \end{cases}$
iv)	Non-standard sampler setup (standard samples with room for liners, but liners are used)	$C_{SS} = \begin{cases} 0.9 & \text{(for loose sand)} \\ 0.8 & \text{(for dense sand)} \end{cases}$
v)	Short rod length	C_{RL} = 0.75 (for rod length 0-3 m) C_{RL} = 0.80 (for rod length 3-4 m) C_{RL} = 0.85 (for rod length 4-6 m) C_{RL} = 0.95 (for rod length 6-10 m) C_{RL} = 1.0 (for rod length 10-30 m)
vi)	Non-standard borehole diameter	$C_{BD} = \begin{cases} 1.00 & \text{(for bore hole diameter of 65-115 mm)} \\ 1.05 & \text{(for bore hole diameter of 150 mm)} \\ 1.15 & \text{(for bore hole diameter of 200 mm)} \end{cases}$

NOTES

1 N= Uncorrected SPT blow count.

2 $C_{60} = C_{HT} C_{HW} C_{SS} C_{RL} C_{BD}$

3 $N_{60} = NC_{60}$

4 C_N = Correction factor for overburden pressure $(N_1)_{60} = C_N C_{60} N$.

ANNEX K

(*Clause* 5.3.4.2)

LIST OF SOME IMPORTANT TOWNS AND THEIR SEISMIC ZONE FACTOR (Z)

Town	*Zone*	*Z*
Agra	III	0.16
Ahmedabad	III	0.16
Ajmer	II	0.10
Allahabad	II	0.10
Almora	IV	0.24
Ambala	IV	0.24
Amritsar	IV	0.24
Asansol	III	0.16
Aurangabad	II	0.10
Bahraich	IV	0.24
Barauni	IV	0.24
Bareilly	III	0.16
Bathinda	III	0.16
Belgaum	III	0.16
Bengaluru	II	0.10
Bhilai	II	0.10
Bhopal	II	0.10
Bhubaneswar	III	0.16
Bhuj	V	0.36
Bijapur	III	0.16
Bikaner	III	0.16
Bokaro	III	0.16
Bulandshahr	IV	0.24
Burdwan	III	0.16
Calicut (Kozhikode)	III	0.16
Chandigarh	IV	0.24
Chennai	III	0.16
Chitradurga	II	0.10
Coimbatore	III	0.16
Cuddalore	II	0.10
Cuttack	III	0.16
Darbhanga	V	0.36
Darjeeling	IV	0.24
Dharwad	III	0.16
Dehra Dun	IV	0.24
Dharampuri	III	0.16
Delhi	IV	0.24
Durgapur	III	0.16
Gangtok	IV	0.24
Guwahati	V	0.36
Gulbarga	II	0.10
Gaya	III	0.16
Gorakhpur	IV	0.24
Hyderabad	II	0.10
Imphal	V	0.36
Jabalpur	III	0.16
Jaipur	II	0.10
Jamshedpur	II	0.10

Town	*Zone*	*Z*
Jhansi	II	0.10
Jodhpur	II	0.10
Jorhat	V	0.36
Kakrapara	III	0.16
Kalpakkam	III	0.16
Kanchipuram	III	0.16
Kanpur	III	0.16
Karwar	III	0.16
Kochi	III	0.16
Kohima	V	0.36
Kolkata	III	0.16
Kota	II	0.10
Kurnool	II	0.10
Lucknow	III	0.16
Ludhiana	IV	0.24
Madurai	II	0.10
Mandi	V	0.36
Mangaluru	III	0.16
Munghe r	IV	0.24
Moradabad	IV	0.24
Mumbai	III	0.16
Mysuru	II	0.10
Nagpur	II	0.10
Nagarjunasagar	II	0.10
Nainital	IV	0.24
Nashik	III	0.16
Nellore	III	0.16
Osmanabad	III	0.16
Panjim	III	0.16
Patiala	III	0.16
Patna	IV	0.24
Pilibhit	IV	0.24
Pondicherry (Puducherry)	II	0.10
Pune	III	0.16
Raipur	II	0.10
Rajkot	III	0.16
Ranchi	II	0.10
Roorkee	IV	0.24
Rourkela	II	0.10
Sadiya	V	0.36
Salem	III	0.16
Shillong	V	0.36
Shimla	IV	0.24
Sironj	II	0.10
Solapur	III	0.16
Srinagar	V	0.36
Surat	III	0.16
Tarapur	III	0.16

Town	*Zone*	*Z*	*Town*	*Zone*	*Z*
Tezpur	V	0.36	Udaipur	II	0.10
Thane	III	0.16	Vadodara	III	0.16
Thanjavur	II	0.10	Varanasi	III	0.16
Thiruvananthapuram	III	0.16	Vellore	III	0.16
Tiruchirappalli	II	0.10	Vijayawada	III	0.16
Tiruvannamalai	III	0.16	Vishakhapatnam	II	0.10

ANNEX L

(*Clause* 6.4.3)

SHAPE COEFFICIENTS FOR MULTILEVEL ROOFS

L-1 A more comprehensive formula for the shape coefficient for multilevel roofs than that given in **6.4.2** is as follows:

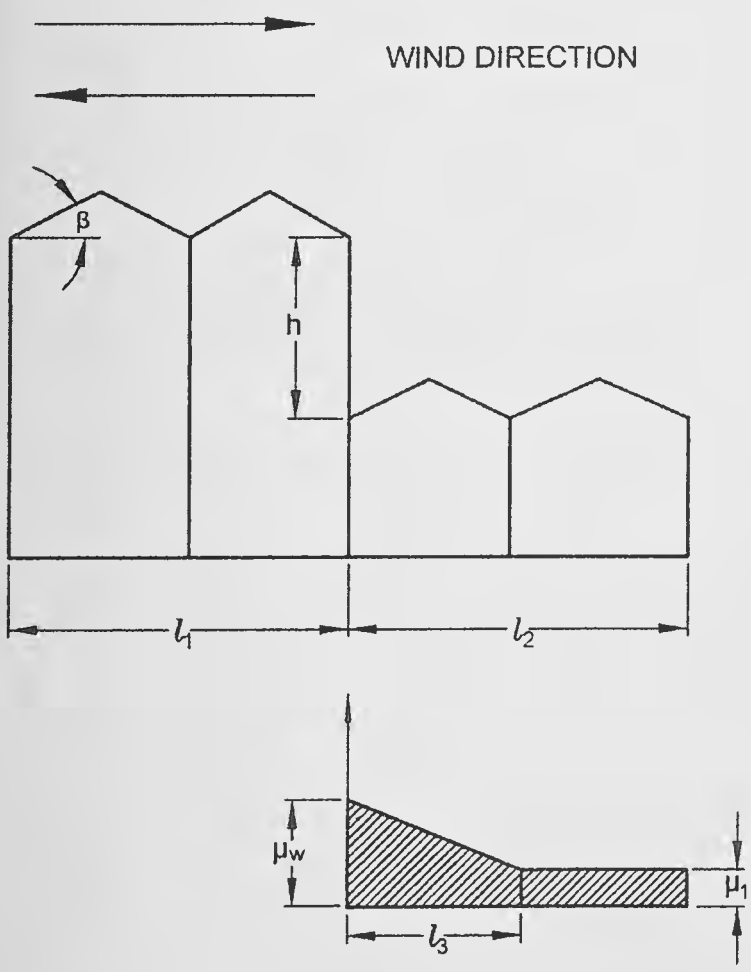

$$\mu_w = 1 + \frac{1}{h}(m_1 l_1 + m_2 l_2)(l_2 - 2h)$$

$$\mu_1 = 0.8$$

$$l_3 = 2h$$

(h and l in m)

Restriction:

$$\mu_w \leq \frac{kh}{S_o}$$

where

S_o is in kilopascals (kilonewtons per square metre).

k is in newtons per cubic metre.

$l_3 \leq 15\ m$

Values of $m_1(m_2)$ for the higher (lower) root depend on its profile and are taken as equal to:

0.5 for plane roofs with slopes $\beta \leq 20°$ and vaulted roofs with $\frac{f}{l} \leq \frac{1}{18}$

0.3 for plane roofs with slopes $\beta > 20°$ and vaulted roofs with $\frac{f}{l} > \frac{1}{18}$

The coefficient m_1 and m_2 may be adjusted to take into account conditions for transfer of snow on the roof surface (that is wind, temperature, etc).

NOTE — The other condition of loading shall also be tried.

ANNEX M

(*Clause* 7.7)

VIBRATIONS IN BUILDINGS

M-1 GENERAL

In order to design the buildings safe against vibrations, it is necessary to identify the source and nature of vibration. Vibrations may be included in the buildings due to various actions, such as,

a) human induced vibrations, for example, the walking or running or a single person or a number of persons or dancing or motions in stadia or concert halls;
b) machine induced vibrations;
c) wind induced vibrations;
d) blast induced vibrations;
e) traffic load, for example, due to rail, fork-lift, trucks, cars, or heavy vehicles;
f) airborne vibrations;
g) crane operations; and
h) other dynamic actions such as wave loads or earthquake actions.

The dynamic response of buildings for the above mentioned causes of vibration of buildings may have to be evaluated by adopting standard mathematical models and procedures.

The severity or otherwise of these actions have to be assessed in terms of the limits set for dynamic response (frequencies and amplitude of motion) of the buildings related to (a) human comfort, (b) serviceability requirements such as deflections and drifts and separation distances to avoid damage due to pounding, and (c) limits set on the frequencies and amplitude of motion for machines and other installations.

In order to verify that the set limits are not exceeded, the actions may be modelled in terms of force-time histories for which the structural responses may be determined as time histories of displacements or accelerations by using appropriate analytical/numerical methods.

M-2 SERVICEABILITY LIMIT STATE VERIFICATION OF STRUCTURE SUSCEPTIBLE TO VIBRATIONS

M-2.1 While giving guidance for serviceability limit state verification of structure susceptible to vibrations, here it is proposed to deal with the treatment of the action side, the determination of the structural response and the limits to be considered for the structural response to ensure that vibrations are not harmful or do not lead to discomfort.

M-2.2 Source of Vibrations

Vibrations may be included by the following sources:

a) By the movement of persons as in pedestrian bridges, floors where people walk, floors meant for sport or dancing activities, and floors with fixed seating and spectator galleries;
b) By working of machines as in machine foundations and supports, vibrations transmitted through the ground, and pile driving operations;
c) By wind blowing on buildings, towers, chimneys and masts, guyed masts, pylons, bridges, cantilevered roofs, airborne vibrations;
d) Induced by traffic on rail or road bridges and car park structures and exhibition halls; and
e) By earthquakes.

M-2.3 Modelling of Actions and Structures

For serviceability limit states, the modelling of these actions and of the structure depends on how the serviceability limits are formulated. The serviceability limit states may refer to,

(a) human comfort;
(b) limits for the proper functioning of machines and other installations; and
(c) maximum deformation limits to avoid damage or pounding.

In order to verify that these limits are not exceeded, the actions may be modeled in terms of force-time histories, for which the structural responses may be determined as time histories of displacements or accelerations by using appropriate analytical/numerical methods. Where the structural response may significantly influence the force-time histories to be applied, these interactions have to be considered either in modeling a combined load-structure vibration system or by appropriate modifications of the force time histories. In addition to the levels of vibration for which presently limits have been specified, the possible deformations of structural members and systems using different clauses in the relevant codes have to be evaluated by adopting standard mathematical models and procedures.

M-2.4 Force-Time Histories

The force-time histories used in the dynamic analysis

should adequately represent the relevant loading situations for which the serviceability limits are to be verified. The force-time histories may model,

a) human induced vibrations, for example the walking or running of a single person or a number of persons or dancing or motions in stadia or concert halls;

b) machine induced vibrations, for example by force vectors due to mass eccentricities and frequencies, that may be variable with time;

c) wind induced vibrations;

d) blast induced vibrations;

e) traffic load, for example rail, fork-lift, trucks, cars, or heavy vehicles;

f) airborne vibrations;

g) crane operations; and

h) other dynamic actions such as wave loads or earthquake actions.

ANNEX N

(*Clause* 7.8)

BLAST LOAD

N-1 BLAST LOAD

Behaviour of structures subjected to blast loads is highly complex and has to be properly understood before designing blast resistant structures. First step towards this is to compute the blast load time history acting on the structures. Magnitude of charge and its distance from the structure are the two basic parameters governing the design (Kinney and Graham, 1985). In addition to these, height of the blast charge above ground, overall length of the structure and breadth of the structure facing the shock front are also important in computation of blast loads acting on the structure. Typical time history of blast pressure is shown in Fig. 31.

N-2 Following are the steps in computation of blast load on structures:

a) Determine ground zero distance by assuming that angle between the vertical line through the point of burst and the slant line joining the burst point with the point of incidence of spherical shock on ground is between 40° and 50°.

b) Find whether the structure lies in regular reflection region or Mach reflection region (*see* Fig. 32).

c) Compute the peak over pressure, P_{so} using:

$$\frac{P_{so}}{p_a} = \frac{808\left[1+(Z/4.5)^2\right]C}{\sqrt{\left[1+(Z/0.048)^2\right]\left[1+(Z/0.32)^2\right]\left[1+(Z/1.35)^2\right]}}$$

where

p_a = atmospheric pressure, in MPa;

C = 0.986 for air-burst (regular region); and

C = 1.883 for surface-burst (Mach region).

d) Compute the positive phase duration, t_d

For regular region using:

$$t_d = \frac{980\left[1+(Z/0.54)^{10}\right]W^{1/3}}{\left[1+(Z/0.02)^3\right]\left[1+(Z/0.74)^6\right]\sqrt{\left[1+(Z/6.9)^2\right]}}$$

For a Mach region using:

$$t_d = \left[1.93\ln(Z)+0.17\right]W^{1/3}$$

e) Obtain the decay of peak overpressure with time using:

$$P(t) = P_{so}\left(1-\frac{t-t_a}{t_d}\right)e^{-\alpha\frac{(t-t_a)}{t_d}} \quad \text{for} \quad t \geq t_a$$

where

$P(t)$ = pressure at any time 't';

t_a = arrival time; and

α = wave form parameter.

f) The wave form parameter is given by:

$$\alpha = 3.18Z^{-0.58}$$

g) Compute the peak reflected pressure, P_{ro} acting on the structure from:

$$P_{ro} = C_r P_{so}$$

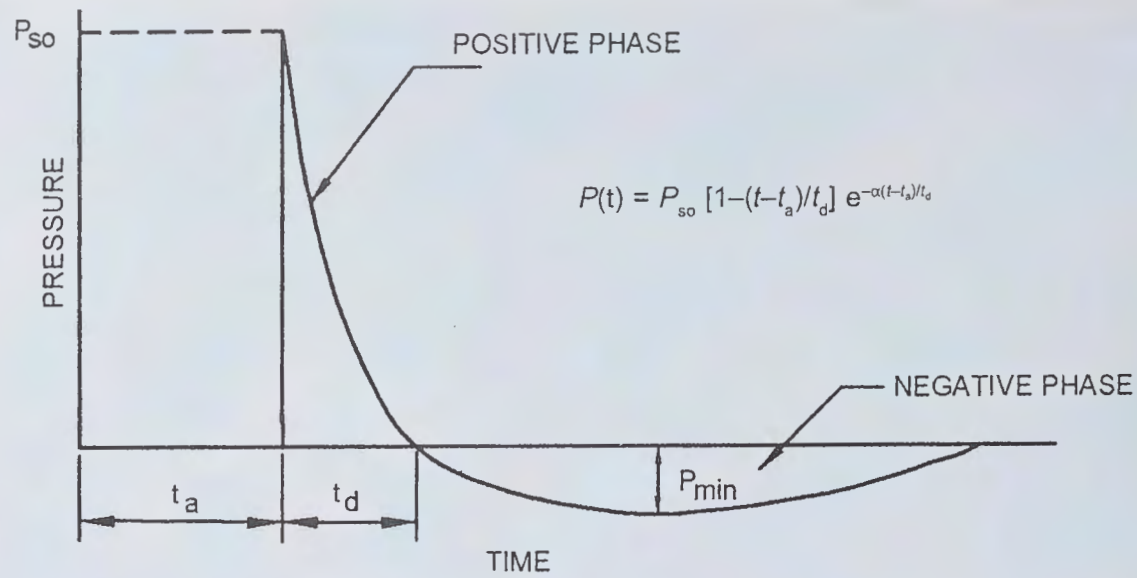

where

α = wave form parameter;
t_a = arrival time;
t_d = duration of positive phase;
W = weight of charge, in kg
t = $1.25W^{1/3}$;
P_{min} = –0.35/Z (Z>1.6);
P_{so} = side-on over pressure in MPa;
Z = scaled distance, in m/kg$^{1/3}$, given by $Z = \frac{d}{W^{1/3}}$; and
d = actual/radial distance, in m, between the point of burst and point, where peak over pressure is calculated.

FIG. 31 TIME HISTORY OF BLAST PRESSURE

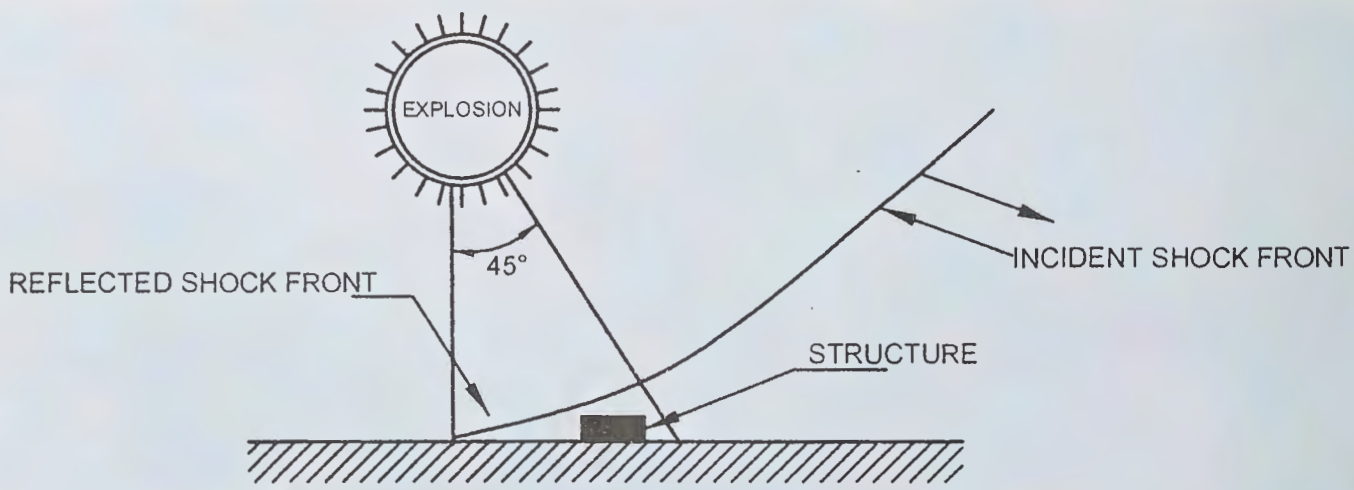

32A Structure Located in Region of Regular Reflection Surface-Burst Environment

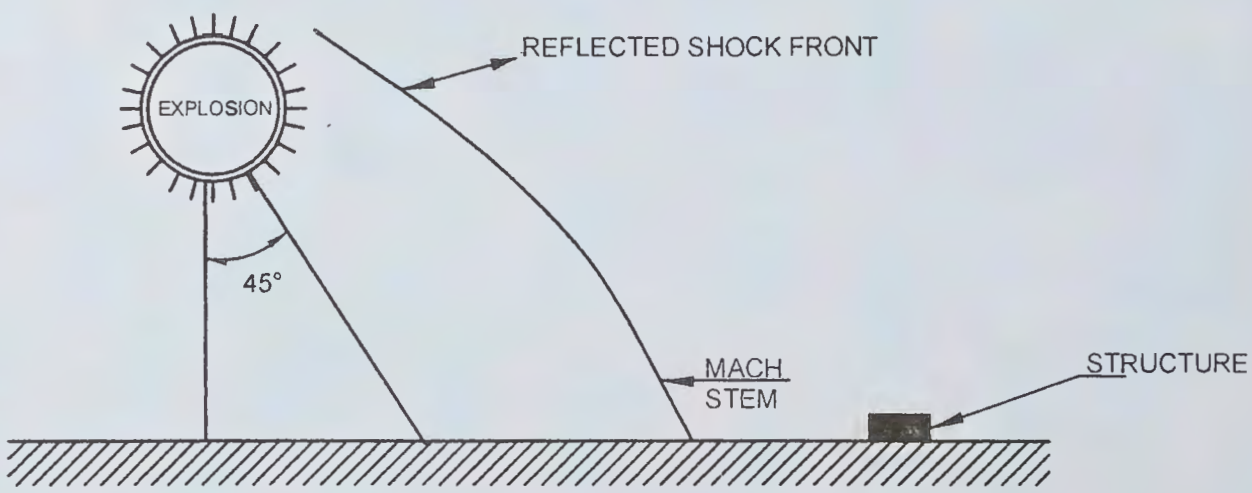

32B Structure Located in Region of Mach Reflection Surface-Burst Environment

FIG. 32 BLAST LOADING OF STRUCTURES WITH RESPECT TO LOCATION OF THE STRUCTURE

where

C_r = reflection coefficient obtained from Fig. 33.

Angle of incidence, θ between the line of wave propagation and outer normal of the face of the structure on which blast load acts is determined using standard procedures. If θ exceeds 90°, reflection coefficient is determined as:

$$C_r = 1.5 - \frac{\theta}{180}$$

h) Critical distance for maximum blast effect, d_d is given by:

$$d_d = H_b + (H_s H_b / 0.07)^{1/2}$$

where

H_b = height of burst above ground, and

H_s = height of structure.

j) Equivalent duration t_e, of the triangular pulse is obtained by equating the impulse of exponentially decaying curve (positive phase) with that of triangular pulse

$$t_e = \frac{2I}{P_{so}}$$

where I is the positive impulse of the exponentially decaying blast time history given by:

$$I = \frac{0.067\sqrt{1+(Z/0.23)^4}}{Z^2\left[1+(Z/1.55)^4\right]^{1/3}}$$

N-3 CLOSED RECTANGULAR STRUCTURES

For closed rectangular structures, Table 52 provides the blast pressure definitions for various faces of the structure due to above ground blasts.

N-4 USE OF LACED REINFORCED CONCRETE IN BLAST RESISTANT CONSTRUCTION

Blast resistant structures are of two types. One type is in which structure is located far from burst point and are designed for far off design range. Other type is located close to a potential explosion and falls under close-in design range. In far off design range, the blast loads are fairly uniform and deflections required to absorb the load are comparatively small. Reinforced concrete with some additional detailing are adequate to resist such loads. Close-in detonations produce non-uniform, high intensity blast loads. Local failure of structural elements is possible due to concentration of pressure at some points. For such structures, reinforced concrete is not sufficient and a material that can permit large deflections and maintain the structural integrity is required. Laced reinforced concrete has enhanced ductility and is suitable for close-in design range. Based on the duration of the impulse load, design can be either impulse design or pressure design as per **J-5** and **J-6**, respectively.

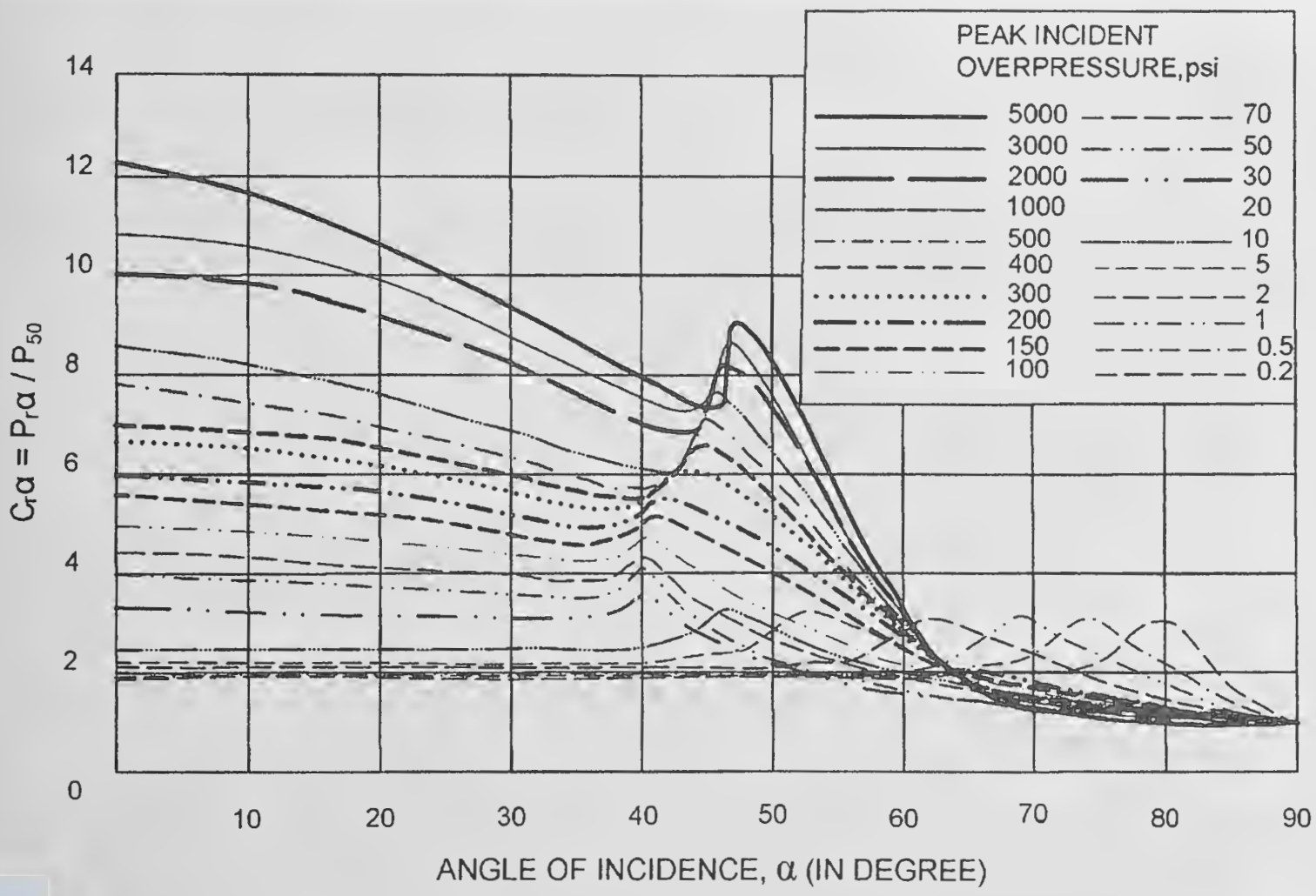

FIG. 33 VARIATION OF REFLECTION COEFFICIENT WITH ANGLE OF INCIDENCE

Table 52 Blast Pressure Definitions

(*Clause* N-3)

Sl No. (1)	Face of the Structure[1)] (2)	Blast Pressure Description (3)	Blast Pressure *Versus* Time (4)	Parameters (5)
i)	Front	Peak reflected pressure, p_{ro} is greater of: $p_{so}\left(2+\frac{6p_{so}}{p_{so}+7p_a}\right)$ and $p_{so}+C_d q_0$ (*see* Fig. 34A and 34B)	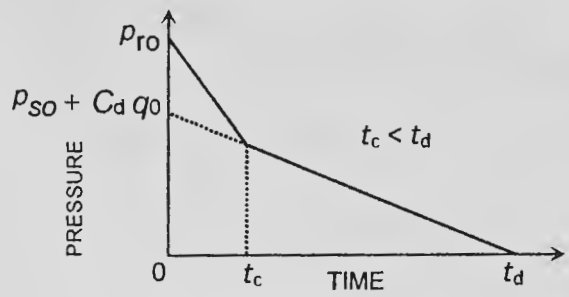 FIG. 34A 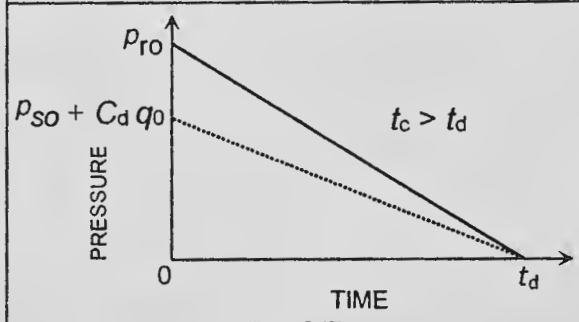 FIG. 34B	q_0 = peak dynamic pressure to be obtained from Table 1 of good practice [6-1(30)]; C_d = coefficient of drag to be taken from Table 2 of good practice [6-1(30)], depending upon the shape of the structure; t_c = clearance time in which reflected pressure drops to over-pressure (= L/U). U = shock wave velocity = Ma; M = Mach number of the incident pulse $=\sqrt{1+6p_{so}/7p_a}$; a = velocity of sound in air; S = least of H and $B/2$. t_t = transit time = L/U.
ii)	Rear	Using the pressures from actual explosion, the average loading is taken as shown in Fig. 35.	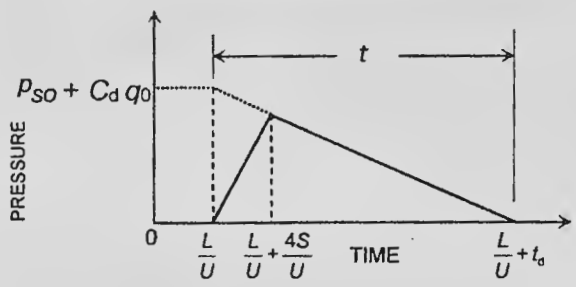 FIG. 35	
iii)	Sides and roof	When pulse duration, t_d is greater than transit time t_t of the wave from front to the sides or roof, pressure varies as shown in Fig. 36A.	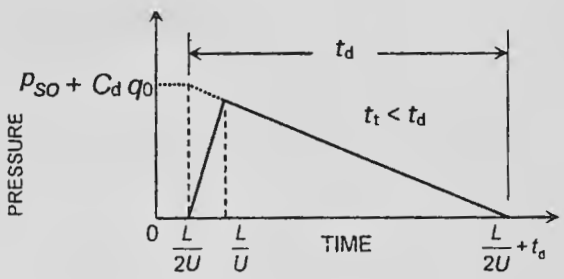 FIG. 36A	
		When pulse duration, t_d is less than transit time t_t of the wave from front to the sides or roof, the pressure may be considered as a moving pulse as shown in Fig. 36B.	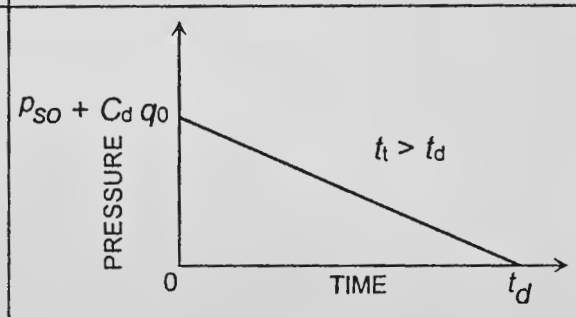 FIG. 36B	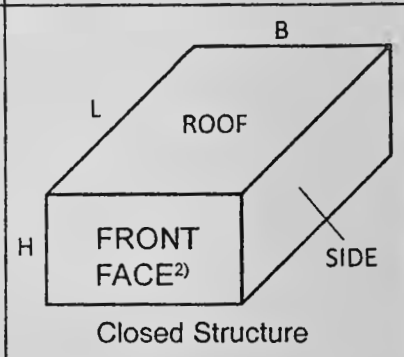 Closed Structure

[1)] The blast pressure definitions given in this table are valid for a closed type structure with less than 5 percent opening.
[2)] Front face is the vertical face of the structure on which the blast wave strikes.

N-5 IMPULSE DESIGN

In close-in design range, the design load can be taken as an impulse, that is, area under pressure time curve. The duration of such an impulsive load is generally small in comparison to the time period of the structural element. The criteria for impulse design is:

$$t_m / t_d > 3$$

where t_d is the duration of the blast load and t_m is the time to reach the maximum response

N-6 PRESSURE DESIGN

Sometimes, in the close-in design range, the duration of blast loads is also quite large. In this case, the structural element is designed for pressure. The criteria for this type of design is,

$$t_m / t_d < 3$$

It should be clearly understood that laced reinforced concrete (LRC) construction is to be used in situations where the potential explosion site is very near to the structure. In the event of an explosion, the LRC element will serve as a barrier and will undergo plastic deformations without complete collapse. This will ensure safety of other nearby structures. Use of LRC for far off design range may prove uneconomical. Therefore, the designer should clearly analyze the situation before employing the LRC technique.

N-6.1 TNT Equivalence

Magnitude of an explosion is based on the amount of energy released. It is expressed in terms of explosion yields, which a relative measure based on TNT yield. Effective charge weight, W is expressed as:

$$W = \frac{H^d{}_{EXP}}{H^d{}_{TNT}} W_{EXP}$$

where

W_{EXP} = weight of explosive in question,

$H^d{}_{EXP}$ = heat of detonation of explosive in question, and

$H^d{}_{TNT}$ = heat of detonation of TNT.

N-7 INTERNAL BLAST LOADING ON STRUCTURES

Method for prediction of blast pressures due to confined explosion is summarized in Fig. 37. Pressure time variation at a point on the wall of the confinement is generated by considering both the shock wave and gas pressure loading phases. For the shock wave loading phase, it is assumed that second shock has half the amplitude and impulse of the initial reflected shock, the third shock has half the amplitude of the second shock and that all later reflections are insignificant (*see* Fig. 38). Durations of the reflected pulses are the same as that of the initial pulses. The time of

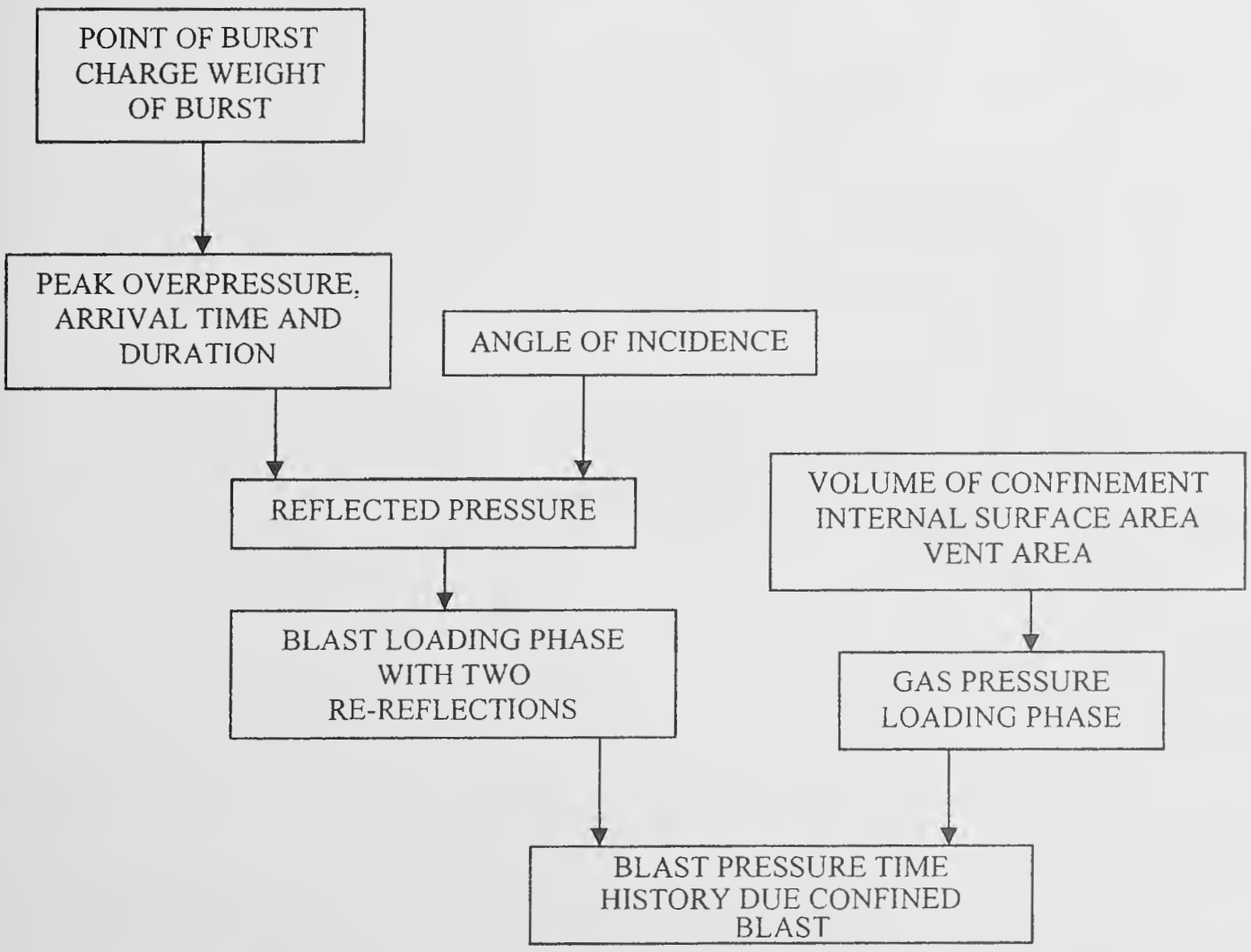

FIG. 37 METHOD FOR PREDICTION OF BLAST PRESSURE DUE TO CONFINED EXPLOSION

reverberation, that is, the time delay between the arrivals of successive reflected shocks, are nearly twice the time of arrival at the point where the blast pressures are calculated.

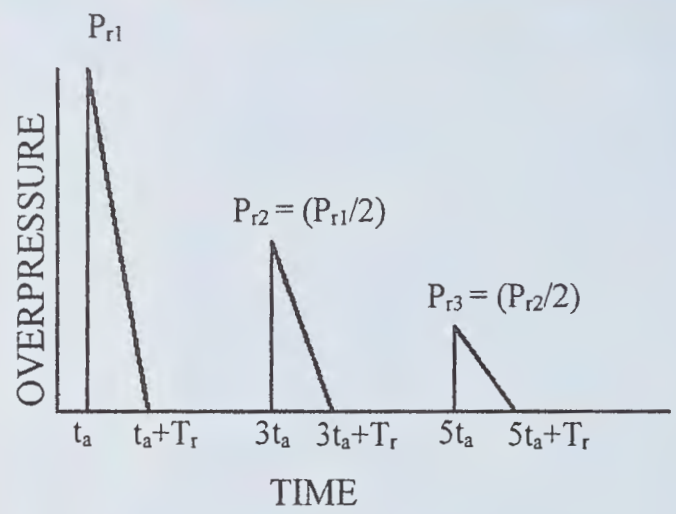

FIG. 38 REFLECTED PHASE LOADING

$$P_I = P_{QS} + P_0$$

where

P_{QS} = maximum value for the quasi-static overpressure in the gas venting phase of the loading.

$$t_1 = 5t_a + T_r$$

$$c = 2.13\left(\frac{\alpha_e A_s a_o}{V}\right)$$

where

α_e = effective vent area ratio,

A_s = internal surface area of the structure,

V = internal volume of the structure, and

a_o = sound velocity of air.

Maximum gas overpressure, P_{QS}, which depends on the quantity of explosive charge, W and the internal volume of confinement, V is obtained from Fig. 40.

The value of t_{max} can be obtained from:

$$t_{max} = \bar{\tau}_{max}\left(\frac{V}{\alpha_e A_s a_o}\right)$$

where $\bar{\tau}_{max}$ is given by the expression:

$$\bar{\tau}_{max} = 0.469\ 5 \ln\left(\bar{P}_1\right)$$

in which, $\bar{P}_1$ is equal to,

$$\bar{P}_1 = \frac{\left(P_{QS} + P_0\right)}{P_0}$$

Estimation of the blast parameters, namely, peak over pressure, time of arrival, time duration, is carried out using the earlier procedure. The gas venting pressure is simplified to the form shown in Fig. 39.

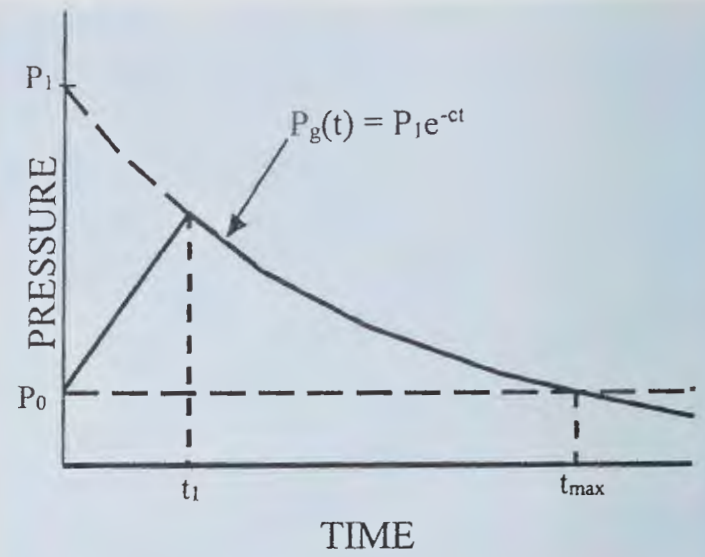

FIG. 39 GAS PRESSURE LOADING

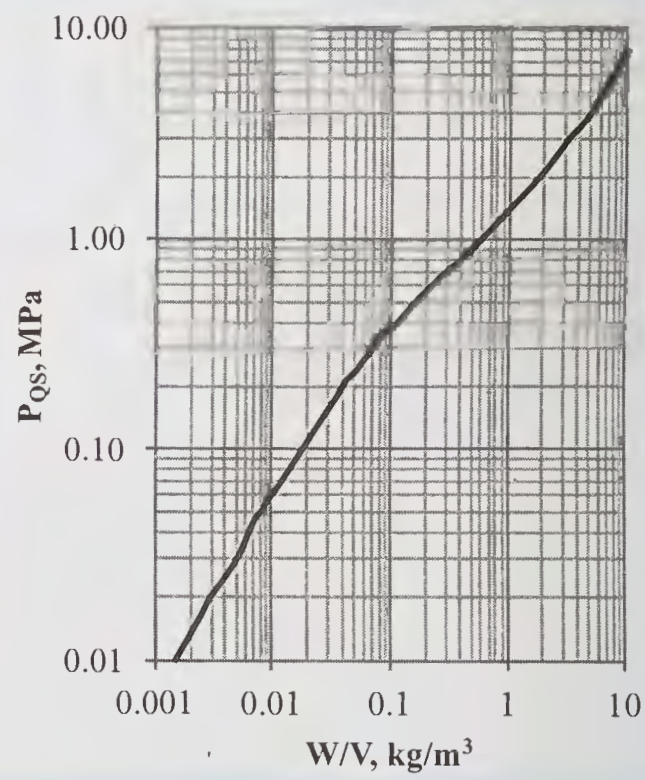

FIG. 40 PEAK QUASI-STATIC PRESSURE FOR TNT EXPLOSION IN CHAMBER

Figure 41 provides the charts for calculation of internal blast pressure for a given scaled distance.

N-8 For design of structures for blast effects of explosions above ground, *see also* good practice [6-1(30)].

For safety of structures during underground blasting, *see also* good practice [6-1(31)].

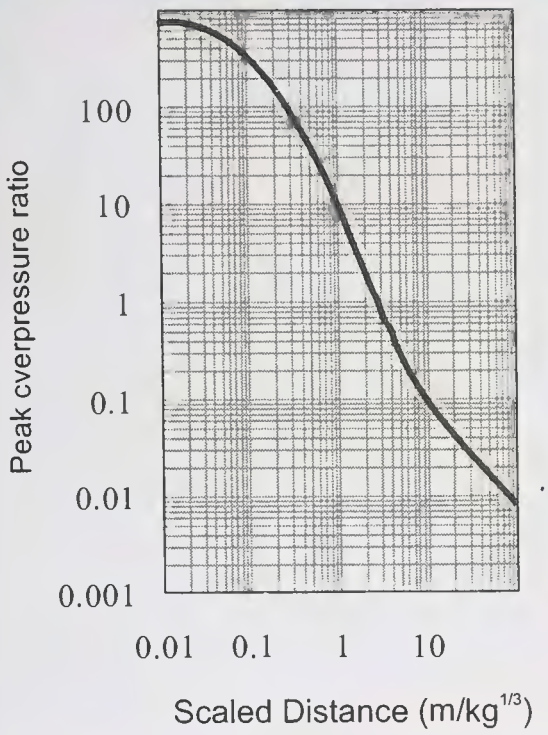

0.01

41A PEAK OVERPRESSURE RATIO

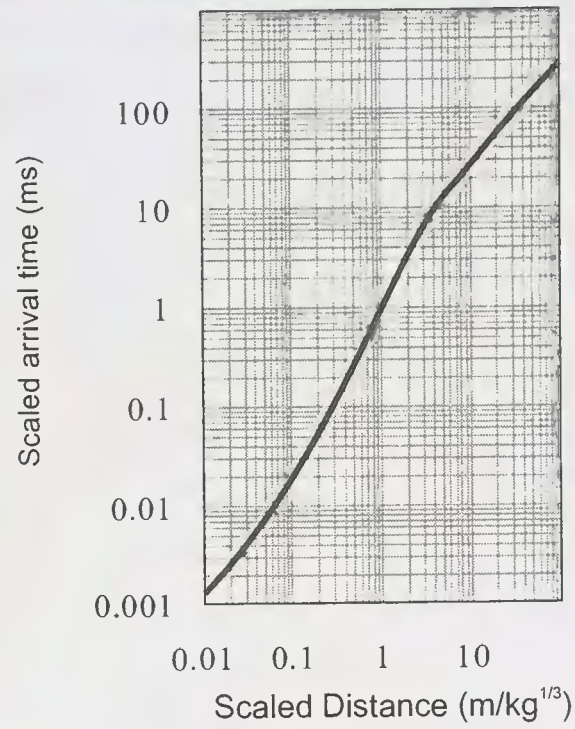

41B SCALED ARRIVAL TIME

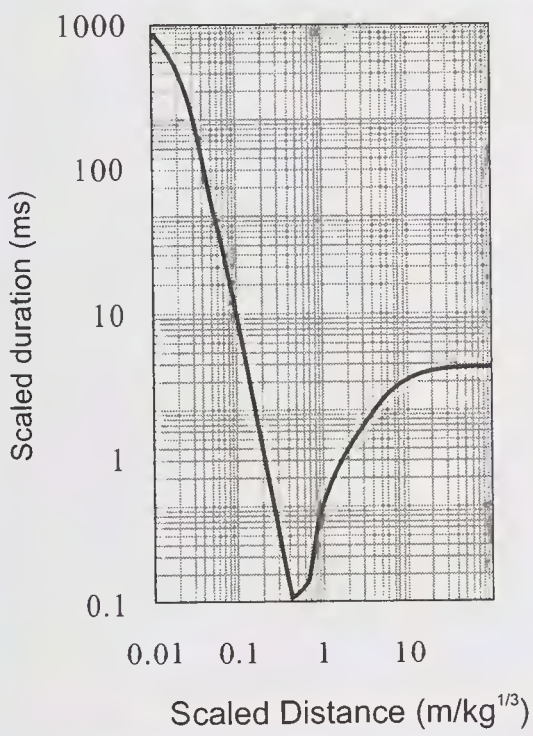

41C SCALED DURATION

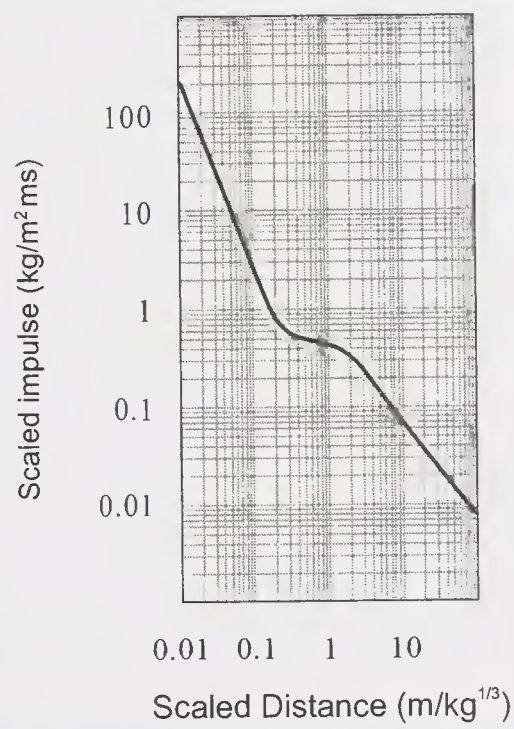

41D SCALED IMPULSE

FIG. 41 CHARTS FOR INTERNAL BLAST PRESSURE PARAMETERS

ANNEX P

(*Clause* 9.2)

SUMMARY OF DISTRICTS HAVING SUBSTANTIAL MULTI-HAZARD RISK AREAS

State	*Name of Districts Having Substantial Multi-Hazard Prone Area*			
	E.Q. and Flood	Cyclone and Flood	E.Q., Cyclone and Flood	E.Q. and Cyclone
(1)	(2)	(3)	(4)	(5)
Andhra Pradesh	Adilabad, Karim Nagar, Khammam	Krishna, Nellore, Srikakulam, Visakhapatnam, Vizianagram	East Godavari, Guntur, Prakasam, West Godavari	–
Assam	All 22 districts listed in Table 53 could have M.S.K IX or more with flooding	No cyclone, but speed can be 50 m/s in districts of Table 53 causing local damage except Dhubri	–	–
Bihar	All 25 districts listed in Table 53	–	–	–
Goa	–	–	–	North and South Goa
Gujarat	Banaskantha, Danthe GS, Gandhinagar, Kheda, Mahesana, Panchmahals, Vadodara	–	Ahmedabad, Bharuch, Surat, Valsad	Amreli, Bhavnagar, Jamnagar, Rajkot, Junagad, Kachcha
Haryana	All 8 districts listed in Table 53	–	–	–
Kerala	Idukki, Kottayam, Palakkad, Pathanamthitta	–	Alappuzha, Ernakulum, Kannur, Kasargod, Kollam, Kozhikode, Malappuram, Thiruvanathapuram, Thrissur	–
Maharashtra	–	–	–	Mumbai, Rayagad, Ratnagiri, Sindhudurg, Thane
Orissa	–	Ganjam	Baleshwar, Cuttack, Puri	Dhenkanal
Punjab	All 12 districts listed in Table 53	–	–	–
Uttar Pradesh and Uttarakhand	All 50 districts listed in Table 53	–	–	–
West Bengal	Birbhum, Darjeeling, Jalpaiguri, Cooch Behar, Malda, Murshidabad, West Dinajpur	–	Bardhaman, Kolkata, Hugli, Howrah, Midnapore, Nadia, North and South 24 Parganas	Bankura
Union Territories	Delhi	–	Yanam (Py)	Diu
India	**139 Districts**	**6 Districts**	**29 Districts**	**16 Districts**

Table 53 Multi-Hazard Prone Districts
(*Annex* P)

Assam
Barpeta, Bongaigaon, Cachar[1], Darrang, Dhemaji, Dhuburi, Dibrugarh, Goalpara, Golaghat, Hailaknadi[1], Jorhat, Kamrup, Karbianglong, Karimganj[1], Kokrajhar, Lakhimpur, Morigaon, Nagaon, Nalbari, Sibsagar, Sonitpur, Tinsukia

Bihar[2]
Araria, Begusarai, Bhagalpur, Bhojpur, Darbhanga, Gopalganj, Katihar, Khagaria, Kishanganj, Madhepura, Madhubani, Munger, Muzaffarpur, Nalanda, Nawada, Paschim Champaran, Patna, Purbachamparan, Purnia, Samastipur, Saran, Saharsa, Sitamarhi, Siwan, Vaishali

Haryana[3]
Ambala, Bhiwani, Faridabad, Gurgaon, Hisar, Jind, Kurukshetra, Rohtak

Table 53 — (*Concluded*)

Punjab[4]
Amritsar, Bathinda, Faridkot, Firozpur, Gurdaspur, Hoshiarpur, Jalandhar, Kapurthala, Ludhiana, Patiala, Rupnagar, Sangrur

Uttar Pradesh and Uttarakhand[5]
Agra, Aligarh, Allahabad, Azamgarh, Bahraich, Ballia, Barabanki, Bareilly, Basti, Bijnor, Budaun, Bulandshahr, Deoria, Etah, Etawah, Faizabad, Farrukhabad, Fatehpur, Firozabad, Ghaziabad, Ghazipur, Gonda, Gorakhpur, Hardoi, Haridwar, Jaunpur, Kanpur (Dehat), Kanpur (Nagar), Kheri, Lucknow, Maharajganj, Mainpuri, Mathura, Mau, Meerut, Mirzapur, Mordabad, Muzaffarnagar, Nainital, Pilibhit, Partapgarh, Raebareli, Rampur, Saharanpur, Shahjahanpur, Siddarth Nagar, Sitapur, Sultanpur, Unnao, Varanasi

[1] Districts liable to cyclonic storm but no storm surge
[2] No cyclonic storm in Bihar
[3] No cyclonic storm in Haryana
[4] No cyclonic storm in Punjab
[5] No cyclonic storm in Uttar Pradesh and Uttarakhand

LIST OF STANDARDS

The following list records those standards which are acceptable as 'good practice' and 'accepted standards' in the fulfillment of the requirements of the Code. The latest version of a standard shall be adopted at the time of enforcement of the Code. The standards listed may be used by the Authority for conformance with the requirements of the referred clauses in the Code.

In the following list, the number appearing in the first column within parentheses indicates the number of the reference in this Section:

	IS No.	*Title*
(1)	875 (Part 1) : 1987	Code of practice for design loads (other than Earthquake) for buildings and structures: Part 1 Dead loads-unit weights of building material and stored materials (*second revision*)
(2)	8888 (Part 1) : 1993	Guide for requirements of low income housing: Part 1 Urban area (*first revision*)
(3)	807 : 2006	Code of practice for design, erection and testing (structural portion) of cranes and hoists (*second revision*)
	3177 : 1999	Code of practice for electric overhead traveling cranes and gantry cranes other than steelwork cranes (*second revision*)
(4)	14732 : 2000	Guidelines for the evaluation of the response of occupants of fixed structures, especially buildings and off-shore structures, to low-frequency horizontal motion (0.063 to 1 Hz)
(5)	15498 : 2004	Guidelines for improving the cyclone resistance of low rise houses and other buildings/ structures
(6)	4326 : 2013	Code of practice for earthquake resistant design and construction of buildings (*third revision*)
	13827 : 1993	Guidelines for improving earthquake resistance of earthen buildings
	13828 : 1993	Guidelines for improving earthquake resistance of low strength masonry buildings
	13920 : 2016	Code of practice for ductile design and detailing of reinforced concrete structures subjected to seismic forces (*first revision*)
	13935 : 1993	Guidelines for repair and seismic strengthening of buildings

	IS No.	Title
	15988 : 2013	Guidelines for seismic evaluation and strengthening of existing reinforced concrete building
(7)	456 : 2000	Code of practice for plain and reinforced concrete (*fourth revision*)
	800 : 2007	Code of practice for general construction in steel (*second revision*)
(8)	13920 : 2016	Code of practice for ductile design and detailing of reinforced concrete structures subjected to seismic forces (*first revision*)
(9)	800 : 2007	Code of practice for general construction in steel (*second revision*)
(10)	456 : 2000	Code of practice for plain and reinforced concrete (*fourth revision*)
(11)	456 : 2000	Code of practice for plain and reinforced concrete (*fourth revision*)
	1343 : 2012	Code of practice for prestressed concrete (*second revision*)
(12)	IS 1893 (Part 4) : 2015	Criteria for earthquake resistant design of structures: Part 4 Industrial structures including stack-like structures (*first revision*)
(13)	456 : 2000	Code of practice for plain and reinforced concrete (*fourth revision*)
	800 : 2007	Code of practice for general construction in steel (second revision)
	1343 : 2012	Code of practice for prestressed concrete (*second revision*)
	1905 : 1987	Code of practice for structural use of unreinforced masonry (*third revision*)
	2974	Code of practice for design and construction of machine foundations:
	(Part 1) : 1982	Foundation for reciprocating type machines (*second revision*)
	(Part 2) : 1980	Foundations for impact type machines (Hammer foundations) (*first revision*)
	(Part 3) : 1992	Foundations for rotary type machines (Medium and high frequency) (*second revision*)
	(Part 4) : 1979	Foundations for rotary type machines of low frequency (*first revision*)
	(Part 5) : 1987	Foundations for impact machines other than hammer (Forging and stamping press, pig breaker, drop crusher and jolter) (*first revision*)
(14)	2974	Code of practice for design and construction of machine foundations:
	(Part 1) : 1982	Foundation for reciprocating type machines (*second revision*)
	(Part 2) : 1980	Foundations for impact type machines (Hammer foundations) (*first revision*)
	(Part 3) : 1992	Foundations for rotary type machines (Medium and high frequency) (*second revision*)
	(Part 4) : 1979	Foundations for rotary type machines of low frequency (*first revision*)
	(Part 5) : 1987	Foundations for impact machines other than hammer (Forging and stamping press, pig breaker, drop crusher and jolter) (*first revision*)
(15)	6403 : 1981	Code of practice for determination of bearing capacity of shallow foundations (*first revision*)
(16)	1888 : 1982	Method of load test on soils (*second revision*)
(17)	1498 : 1970	Classification and identification of soils for general engineering purposes (*first revision*)
	2131 : 1981	Method of standard penetration test for soils (*first revision*)
(18)	1893	Criteria for earthquake resistant design of structures:
	(Part 1) : 2016	General provisions and buildings (*Sixth revision*)
	(Part 2) : 2014	Liquid retaining tanks (*fifth revision*)
	(Part 3) : 2014	Bridges and retaining walls
	(Part 4) : 2015	Industrial structures including stack-like structures (*first revision*)
(19)	1905 : 1987	Code of practice for structural use of unreinforced masonry (*third revision*)
(20)	4326 : 2013	Earthquake resistant design and construction of buildings — Code of Practice (*third revision*)
(21)	3414 : 1968	Code of practice for design and installation of joints in buildings
(22)	875 (Part 5) : 1987	Code of practice for design loads (other than Earthquake) for buildings and structures: Part 5 Special loads and combinations (*second revision*)

IS No.	*Title*
(23) 1642 : 2013	Code of practice fire safety of buildings (general): Details of construction (*second revision*)
(24) 14458 (Part 1) : 1998	Guidelines for retaining wall for hill area: Part 1 Selection of type of wall
(25) 14458 (Part 2) : 1997	Guidelines for retaining wall for hill area: Part 2 Design of retaining/breast walls
(26) 14458 (Part 3) : 1998	Guidelines for retaining wall for hill area: Part 3 Construction of dry stone walls
(27) 14496 (Part 2) : 1998	Guidelines for preparation of landslide—Hazard zonation maps in mountainous terrains: Part 2 Macro-zonation
(28) 14680 : 1999	Guidelines for landslide control
(29) 2131 : 1981	Method of standard penetration test for soils (*first revision*)
(30) 4991 : 1968	Criteria for blast resistant design of structures for explosions above ground
(31) 6922 : 1973	Criteria for safety and design of structures subject to underground blasts

NATIONAL BUILDING CODE OF INDIA

PART 6 STRUCTURAL DESIGN

Section 2 Soils and Foundations

BUREAU OF INDIAN STANDARDS

CONTENTS

FOREWORD ... 3

1 SCOPE ... 5

2 TERMINOLOGY ... 5

3 SITE INVESTIGATION ... 7

4 CLASSIFICATION AND IDENTIFICATION OF SOILS ... 14

5 MATERIALS ... 14

6 GENERAL REQUIREMENTS FOR FOUNDATIONS/SUBSTRUCTURES FOR BUILDINGS ... 14

7 SHALLOW FOUNDATIONS ... 18

8 DRIVEN/BORED CAST *IN-SITU* CONCRETE PILES ... 25

9 DRIVEN PRECAST CONCRETE PILES ... 29

10 PRECAST CONCRETE PILES IN PREBORED HOLES ... 32

11 UNDER-REAMED PILES ... 32

12 TIMBER PILES ... 35

13 OTHER FOUNDATIONS, SUBSTRUCTURES AND FOUNDATIONS FOR SPECIAL STRUCTURES ... 35

14 GROUND IMPROVEMENT ... 36

ANNEX A DETERMINATION OF MODULUS OF ELASTICITY (E_s) AND POISSON'S RATIO (μ) ... 37

ANNEX B DETERMINATION OF MODULUS OF SUBGRADE REACTION ... 38

ANNEX C RIGIDITY OF SUPERSTRUCTURE AND FOUNDATION ... 39

ANNEX D CALCULATION OF PRESSURE DISTRIBUTION BY CONVENTIONAL METHOD ... 40

ANNEX E CONTACT PRESSURE DISTRIBUTION AND MOMENTS BELOW FLEXIBLE FOUNDATION ... 41

ANNEX F FLEXIBLE FOUNDATION — GENERAL CONDITION ... 43

ANNEX G LOAD CARRYING CAPACITY OF PILES — STATIC ANALYSIS ... 44

ANNEX H ANALYSIS OF LATERALLY LOADED PILES ... 48

ANNEX J LOAD CARRYING CAPACITY OF UNDER-REAMED PILES FROM SOIL PROPERTIES ... 51

ANNEX K SOIL IMPROVEMENT METHODS ... 52

LIST OF STANDARDS ... 57

FOREWORD

This Code (Part 6/Section 2) deals with the structural design aspects of foundations and mainly covers the design principles involved in different types of foundations.

This Section was published in 1970, and subsequently revised in 1983 and 2005. In the first revision, design considerations in respect of shallow foundation were modified, provisions regarding pier foundation were added and provisions regarding raft foundation and pile foundation were revised and elaborated. In the second revision, design considerations in respect of shallow foundations were again modified, method for determining depth of fixity, lateral deflection and maximum moment of laterally loaded piles were modified and reference was made to ground improvement techniques.

As a result of experience gained in implementation of 2005 version of the Code and feedback received as well as revision of standards in the field of soils and foundations, a need to revise this Section was felt. This revision has therefore been prepared to take into account these developments. The significant changes incorporated in this revision include:

a) The scope of this Section has been extended to cover design of foundations on rock.
b) Definitions of various terms have been modified as per the prevailing engineering practice and new terms have been added, particularly those relating to pile foundation and ground improvement.
c) The clause on site investigation has been completely reviewed and number of modifications have been included, such as, new methods of soil investigation have been added; depth of exploration for pile foundations has been added; new sub-clauses on vertical interval for field tests and site investigation report have been added; etc.
d) Method for assessment of liquefaction potential of a site has been included through a cross-reference to Part 6 'Structural Design, Section 1 Loads, Forces and Effects' of the Code.
e) Permissible differential settlements and tilt (angular distortion) for shallow foundations in soils as given in Table 3 has been modified.
f) Procedures for calculation of bearing capacity, structural capacity, factor of safety, lateral load capacity, overloading, etc, in case of pile foundations have also been modified to bring them at par with the present practices.
g) Design parameters with respect to adhesion factor, earth pressure coefficient, modulus of subgrade reaction, etc, for design of pile foundations have also been revised to make them consistence with the outcome of modern research and construction practices.
h) Provision has been made for use of any established dynamic pile driving formulae, instead of recommending any specific formula, to control the pile driving at site, giving due consideration to limitations of various formulae.
j) Other modifications have also been incorporated in provisions relating to pile foundations to bring them in coherence with the revised Indian Standards on pile foundations.
k) A reference to spun piles, which are used in deep marshy soils where conventional pile installation beyond 50 m is difficult, has been included. However, much detail is not available in the country for the purpose of codal provisions which may be shared by the users of spun pipes in the country based on their experience in use of these piles, for formulation of guidelines thereon.
m) The clause on ground improvement techniques has been elaborated and a table on summary of soil improvement methods has been added.

For detailed information regarding structural analysis and soil mechanics aspects of individual foundations, reference should be made to standard textbooks and available literature.

The information contained in this section is mainly based on the following Indian Standards:

IS 1080 : 1985	Code of practice for design and construction of shallow foundations in soils (other than raft, ring and shell) (*second revision*)
IS 1892 : 1979	Code of practice for subsurface investigation for foundations (*first revision*)
IS 1904 : 1986	Code of practice for design and construction of foundations in soils: General requirements (*third revision*)
IS 2911	Code of practice for design and construction of pile foundations
(Part 1/Sec 1) : 2010	Concrete piles, Section 1 Driven cast *in-situ* concrete piles (*second revision*)
(Part 1/Sec 2) : 2010	Concrete piles, Section 2 Bored cast *in-situ* piles (*second revision*)
(Part 1/Sec 3) : 2010	Concrete piles, Section 3 Driven precast concrete piles (*second revision*)
(Part 1/Sec 4) : 2010	Concrete piles, Section 4 Precast concrete piles in prebored holes (*first revision*)
(Part 2) : 1980	Timber piles (*first revision*)
(Part 3) : 1980	Under-reamed piles (*first revision*)
IS 2950 (Part 1) : 1981	Code of practice for design and construction of raft foundations: Part 1 Design (*second revision*)

All standards, whether given herein above or cross-referred to in the main text of this Section, are subject to the revision. The parties to agreement based on this Section are encouraged to investigate the possibility of applying the most recent editions of the standards.

For the purpose of deciding whether a particular requirement of this Section is complied with, the final value, observed or calculated, expressing the result of a test or analysis, shall be rounded off in accordance with IS 2 : 1960 'Rules for rounding off numerical values (*revised*)'. The number of significant places retained in the rounded off value should be the same as that of the specified value in this Section.

NATIONAL BUILDING CODE OF INDIA

PART 6 STRUCTURAL DESIGN

Section 2 Soils and Foundations

1 SCOPE

1.1 This Code (Part 6/Section 2) covers geotechnical design (principles) of building foundations, such as shallow foundations like continuous strip footings, combined footings, raft foundations; deep foundations like pile foundations; and other foundation systems to ensure safety and serviceability without exceeding the permissible stresses of the materials of foundations and the bearing capacity of the supporting soil/rock.

1.2 It also covers provisions relating to preliminary work required for construction of foundations and protection of excavation.

2 TERMINOLOGY

For the purpose of this Section, the following definitions shall apply.

2.1 General

2.1.1 *Clay* — An aggregate of microscopic and sub-microscopic particles derived from the chemical decomposition and disintegration of rock constituents. It is plastic within a moderate to wide range of water content. The particles are less than 0.002 mm in size.

2.1.2 *Clay, Firm* — A clay which at its natural water content can be moulded by substantial pressure with the fingers and can be excavated with a spade.

2.1.3 *Clay, Soft* — A clay which at its natural water content can be easily moulded with the fingers and readily excavated.

2.1.4 *Clay, Stiff* — A clay which at its natural water content cannot be moulded with the fingers and requires a pick or pneumatic spade for its removal.

2.1.5 *Foundation* — That part of the structure which is in direct contact with and transmits loads to the ground.

2.1.6 *Gravel* — Angular, rounded or semi-rounded particles of rock or soil of particle size between 4.75 mm and 75 mm.

2.1.7 *Peat* — A fibrous mass of organic matter in various stages of decomposition generally dark brown to black in colour and of spongy consistency.

2.1.8 *Sand* — Cohesionless aggregates of angular, sub-angular, sub-rounded, rounded, flaky or flat fragments of more or less unaltered rocks, or mineral of size between 4.75 mm and 0.075 mm IS Sieve.

2.1.9 *Sand, Coarse* — Sand of particle size between 2.0 mm and 4.75 mm IS Sieve.

2.1.10 *Sand, Fine* — Sand of particle size between 0.075 mm and 0.425 mm IS Sieve.

2.1.11 *Sand, Medium* — Sand of particle size between 0.425 mm and 2.0 mm IS Sieve.

2.1.12 *Silt* — Fine-grained soil or fine-grained portion of soil which exhibits a little or no plasticity and has a little or no strength when air dried. The size of particles ranges from 0.075 mm to 0.002 mm.

2.1.13 *Soft Rock* — A rocky cemented material which offers a high resistance to picking up with pick axes and sharp tools but which does not normally require blasting or chiselling for excavation.

2.1.14 *Soil, Black Cotton* — Inorganic clays of medium to high compressibility. They form a major soil group in India. They are predominately montmorillonitic in structure and yellowish black or blackish grey in colour. They are characterized by high shrinkage and swelling properties.

2.1.15 *Soil, Coarse Grained* — Soils which include the coarse and largely siliceous and unaltered products of rock weathering. They possess no plasticity and tend to lack cohesion when in dry state. In these soils, more than half the total material by weight is larger than 75-micron IS Sieve size.

2.1.16 *Soil, Fine Grained* — Soils consisting of the fine and altered products of rock weathering, possessing cohesion and plasticity in their natural state, the former even when dry and both even when submerged. In these soils, more than half of the material by weight is smaller than 75-micron IS Sieve size.

2.1.17 *Soil, Highly Organic and Other Miscellaneous Soil Materials* — Soils consisting of large percentages of fibrous organic matter, such as peat, and particles of decomposed vegetation. In addition, certain soils containing shells, concretions, cinders, and other non-soil materials in sufficient quantities are also grouped in this division.

2.1.18 *Total Settlement* — The total downward movement of the foundation unit under load.

2.2 Ground Improvement

2.2.1 *Ground Improvement* — Enhancement of the in-place properties of the ground by controlled application of technique suited to subsoil conditions.

2.2.2 *Injection* — Introduction of a chemical/cementitious material into a soil mass by application of pressure.

2.2.3 *Preloading* – Application of loads to achieve improvement of soil properties prior to imposition of structural loads.

2.2.4 *Soil Densification* — A technique to densify cohesionless soils by imparting shocks or vibrations.

2.2.5 *Soil Reinforcement* — Rods, strips or fabrics incorporated within soil mass to impart resistance to tensile, shear and compressive forces.

2.3 Shallow Foundation

2.3.1 *Back Fill* — Materials used or reused to fill an excavation.

2.3.2 *Bearing Capacity, Safe* — The maximum intensity of loading that the soil will safely carry with a factor of safety against shear failure of soil irrespective of any settlement that may occur.

2.3.3 *Bearing Capacity, Ultimate* — The intensity of loading at the base of a foundation which would cause shear failure of the supporting soil.

2.3.4 *Bearing Pressure, Allowable (Gross or Net)* — The intensity of loading which the foundation will carry without undergoing settlement in excess of the permissible value for the structure under consideration but not exceeding safe bearing capacity.

The net allowable bearing pressure is the gross allowable bearing pressure minus the surcharge intensity.

NOTE — The concept of 'gross' and 'net' used in defining the allowable bearing pressure could also be extended to safe bearing capacity, safe bearing pressure and ultimate bearing capacity.

2.3.5 *Factor of Safety (with Respect to Bearing Capacity)* — A factor by which the ultimate bearing capacity (net) shall be reduced to arrive at the value of safe bearing capacity (net).

2.3.6 *Footing* — A structure constructed in brick work, masonry or concrete under the base of a wall or column for the purpose of distributing the load over a larger area.

2.3.7 *Foundation, Raft* — A substructure supporting an arrangement of columns or walls in a row or rows transmitting the loads to the soil by means of a continuous slab, with or without depressions or openings.

2.3.8 *Made-Up Ground* — Refuse, excavated soil or rock deposited for the purpose of filling a depression or raising a site above the natural surface level of the ground.

2.3.9 *Offset* — The projection of the lower step from the vertical face of the upper step.

2.3.10 *Permanent Load* — Loads which remain on the structure for a period, or a number of periods, long enough to cause time dependent deformation/settlement of the soil.

2.3.11 *Shallow Foundation* — A foundation whose width is generally equal to or greater than its depth. The shearing resistance of the soil in the sides of the foundation is generally neglected.

2.3.12 *Spread (or Isolated or Pad) Foundation/Footing* — A foundation which transmits the load to the ground through one or more footings. A spread footing (or isolated or pad) is provided to support an individual column. A spread footing is circular, square or rectangular slab of uniform thickness. Sometimes, it is stepped or haunched to spread the load over a large area.

2.3.13 *Strip Foundation/Footing* — A type of shallow foundation which provides continuous and longitudinal bearing for loads carried by vertical elements, such as continuous wall foundation beams or the like. A strip footing is also provided for a row of columns which are so closely spaced that their spread footings overlap or nearly touch each other. A strip footing is also known as continuous footing.

2.4 Pile Foundation

2.4.1 *Allowable Load* — The load which may be applied to a pile after taking into account its ultimate load capacity, group effect, the allowable settlement, negative skin friction and other relevant loading conditions including reversal of loads, if any.

2.4.2 *Anchor Pile* — A pile meant for resisting pull or uplift forces.

2.4.3 *Batter Pile (Raker Pile)* — The pile which is installed at an angle to the vertical using temporary casing or permanent liner.

2.4.4 *Bored Cast in-situ Pile* — Piles formed by boring a hole in the ground by percussive or rotary method with the use of temporary/permanent casing or drilling mud and subsequently filling the hole with reinforced concrete.

2.4.5 *Bored Compaction Pile* — A bored cast *in-situ* pile with or without bulb(s) in which the compaction of the surrounding ground and freshly filled concrete in pile bore is simultaneously achieved by a suitable method. If the pile is with bulb(s), it is known as under-reamed bored compaction pile.

2.4.6 *Bored Pile* — A pile formed with or without casing by excavating or boring a hole in the ground and subsequently filling it with plain or reinforced concrete.

2.4.7 *Cut-off Level* — It is the level where a pile is cut-off to support the pile caps or beams or any other structural components at that level.

2.4.8 *Driven Cast in-situ Pile* — The pile formed within the ground by driving a casing of uniform diameter, or a device to provide enlarged base and subsequently filling the hole with reinforced concrete. For displacing the subsoil the casing is driven with a plug or a shoe at the bottom. When the casing is left permanently in the ground, it is termed as cased pile and when the casing is taken out, it is termed as uncased pile. The steel casing tube is tamped during its extraction to ensure proper compaction of concrete.

2.4.9 *Efficiency of a Pile Group* — It is the ratio of the actual supporting value of a group of piles to the supporting value arrived at by multiplying the pile resistance of an isolated pile by their number in the group.

2.4.10 *Initial Load Test* — A test pile is tested to determine the load carrying capacity of the pile by loading either to its ultimate load or to twice the estimated safe load.

2.4.11 *Negative Skin Friction* — Negative skin friction is the force developed through the friction between the pile and the soil in such a direction as to increase the loading on the pile, generally due to drag of a consolidating soft layer around the pile resting on a stiffer bearing stratum such that the surrounding soil settles more than the pile.

2.4.12 *Pile Spacing* — The spacing of piles means the centre-to-centre distance between adjacent piles.

2.4.13 *Precast Concrete Piles in Prebored Holes* — A pile constructed in reinforced concrete in a casting yard and subsequently lowered into prebored holes and the annular space around the pile grouted.

2.4.14 *Precast Driven Pile* — The pile constructed in concrete in a casting yard and subsequently driven into the ground when it has attained sufficient strength.

2.4.15 *Routine Test* — Test carried out on a working pile with a view to check whether pile is capable of taking the working load assigned to it without exceeding permissible settlement.

2.4.16 *Safe Load* — It is the load derived by applying a factor of safety on the ultimate load capacity of the pile/pile group or as determined from load test.

2.4.17 *Ultimate Load Capacity* — The maximum load which a pile can carry before failure, that is, when the founding strata fails by shear as evidenced from the load settlement curve or the pile fails as a structural member.

2.4.18 *Under-Reamed Pile* — A bored cast *in-situ* or bored compaction concrete pile with enlarged bulb(s) made by either cutting or scooping out the soil or by any other suitable process.

An under-reamed pile having more than one bulb is termed as multi under-reamed piles. The piles having two bulbs may be called double under-reamed piles.

2.4.19 *Working Load* — The load assigned to a pile as per design.

2.4.20 *Working Pile* — A pile forming part of the foundation system of a given structure.

3 SITE INVESTIGATION

3.1 General

Site investigation is essential in determining the physical, chemical and engineering properties of subsoil to arrive at the required foundation system. However, in areas which have already been developed, information may be obtained regarding the existing local knowledge, records of trial pits, boreholes, etc, in the vicinity, and the behaviour of the existing structures, particularly those of a similar nature to those proposed. This information may be made use of for design of foundation of lightly loaded structures of not more than two storeys and also for deciding the scope of further investigation for other structures.

3.1.1 If the existing information is not sufficient or is inconclusive, the proposed site should be explored in detail as per good practice [6-2(1)], so as to obtain a knowledge of the type, uniformity, consistency, thickness, sequence and dip of the strata, hydrology of the area and also the engineering properties. In the case of lightly loaded structures of not more than two storeys the tests required to obtain the above information are optional, mainly depending on site conditions.

3.1.1.1 Site reconnaissance would help in deciding future programme of field investigations, that is, to assess the need for preliminary or detailed investigations. Information on some of these may be obtained from topographical maps, geological maps, pedological and soil survey maps, seismic maps and aerial photographs.

Geological maps of the area give valuable information of the site conditions. The general topography will often give some indications of the soil conditions and their variations. In certain cases the earlier uses of the land (like quarries, agricultural land, buried canals, etc) may have a very important bearing on the proposed new structures.

The presence of harmful chemicals in the subsoil can be easily identified by geology or by reconnaissance.

Data regarding removal of overburden by excavation, erosion or landslides should be obtained. This gives an idea of the amount of preconsolidation the soil strata has undergone. Similarly, data regarding recent fills is also important to study the consolidation characteristics of the fill as well as the original strata. Data regarding swelling or expansive soils will be useful information.

3.1.1.2 *Ground water conditions*

The ground water level fluctuates and will depend upon the permeability of the strata and the head causing the water to flow. The water level in streams and water courses, if any and wells in the vicinity give useful indications of the ground-water levels.

3.1.1.3 Rock out, crops if any may also be indicated during reconnaissance.

3.2 Methods of Site Exploration

3.2.1 *General*

Subsurface explorations should generally be carried out in two stages, that is, preliminary and detailed.

3.2.1.1 *Preliminary exploration*

The investigation at this stage is to explore the feasibility aspects. The scope of preliminary exploration is restricted to the determination of depths, thickness, extent and composition of each soil stratum, location of rock and ground water and also to obtain approximate information regarding strength in compressibility of the various strata.

The number of boreholes to be explored depends upon the importance of the structure, the aerial extent of facility, the topography and the nature of sub-strata conditions. Less than five exploratory boreholes, few sounding tests, geophysical methods and often few trial pits are generally adequate in the case of preliminary exploration.

3.2.1.2 *Detailed exploration*

Detailed investigation follow preliminary investigation and should be planned on the basis of data obtained during review as the investigations progress. The scope of detailed exploration is generally to determine shear strength and compressibility of all types of soils, density, density index, natural moisture content and permeability. It is also necessary to determine the preconsolidation pressure of the strata from oedometer tests and consolidation characteristics beyond the preconsolidation pressure. The detailed investigation includes boring, detailed sampling and laboratory tests to determine the physical, chemical and engineering properties of soil and rock. Field tests which may be performed are *in-situ* vane shear tests (suitable in case of soft cohesive soil) and plate load tests.

In a situation of liquefaction possibility, exploratory boreholes with SPT and sampling at very close depth intervals should be carried out, while static cone penetration tests with or without pore water pressure measurement are very useful. The cross hole shear tests and laboratory cyclic shear tests are useful in assessing the liquefaction potential.

NOTE — A method for assessment of liquefaction potential of a site is given in Annex J of Part 6 'Structural Design, Section 1 Loads, Forces and Effects' of the Code.

3.2.1.3 The common methods of subsoil exploration are given below:

a) The most commonly used exploration procedure is boring in which different field testing procedures, like, standard penetration tests (SPT), field vane shear tests (VST), collection of undisturbed and disturbed sampling (UDS and DS), ground water table observations and field classification are employed.

b) *Open trial pits* — The method consists of excavating trial pits and thereby exposing the subsoil surface thoroughly, enabling undisturbed samples to be taken from the sides and bottom of the trial pits. This is suitable for all types of formations, but should be used for small depths (up to 3 m). In the case of cuts which cannot stand below water table, proper bracing should be given. The method may be used for examining the suitability of borrow pits.

c) *Auger boring* — The auger is either power or hand operated with periodic removal of the cuttings. Auger boring can be adopted in soft to stiff cohesive soils above water table. Augers shall be of helical or post hole type which may be manually or power operated. While boring, care shall be taken to minimize the disturbance to the deposits below the bottom of the borehole. The cuttings brought up by the auger shall be carefully examined in the field and the description of all the strata shall be duly recorded. No water shall be introduced from the top while conducting auger boring.

d) *Shell and auger boring* — Both manual and mechanized rig can be used for vertical borings. The tool normally consists of augers for soft to stiff clays, shells for very stiff and hard clays, and shells or sand pumps for sandy strata attached to sectional boring rods.

e) *Wash boring* — In wash boring, the soil is loosened and removed from the borehole by a stream of water or drilling mud is worked up and down or rotated in the borehole. The water or mud flow carries the soil up the annular space between the wash pipe and the casing and it overflows at ground level where the soil in suspension is allowed to settle in a pond or tank and the fluid is re-circulated as required. Samples of the settled out soil can be retained for identification purposes but this process is often unreliable. However, accurate identification can be obtained if frequent sampling is resorted to using undisturbed sample tubes.

f) *Geophysical methods like electrical resistivity method and seismic method*

g) *Percussion boring*

h) *Rotary boring* — In this system, boring is effected by the cutting action of a rotating bit and a mud-laden fluid or grout is pumped continuously down hollow drill rods and side of the hole.

j) *Core drilling* — To obtain the core samples, core drilling using double table barrel, preferably using hydraulic feed to avoid disturbance to the rock core, is used.

k) *Pressure meter test (PMT)* — In this, a uniform radial stress is applied to the borehole and consequent deformation is measured from which limiting pressures and modulus are obtained. This test can also be used where the sampling in hard strata becomes difficult or where there is no UDS collected. For industrial structures, 80 bars capacity energy will suffice. However for nuclear projects, higher capacity up to 200 bars may be required.

m) *Plate load test* — This test is conducted at shallow depths with an assumption that it directly determines the bearing capacity. Small size steel plates or relatively large RCC pads are used for conducting this test.

NOTE — While this procedure may be adequate for light or less important structures under normal conditions, relevant laboratory tests or field tests are essential in the case of unusual soil types and for all heavy and important structures. Plate load test, though useful in obtaining the necessary information about the soil with particular reference to design of foundation has some limitations. The test results reflect only the character of the soil located within a depth of less than twice the width of the bearing plate. Since the foundations are generally larger than the test platcs, the settlement and shear resistance will depend on the properties of a much thicker stratum. Moreover, this method does not give the ultimate settlements particularly in case of cohesive soils. Thus the results of the test are likely to be misleading, if the character of the soil changes at shallow depths, which is not uncommon. A satisfactory load test should, therefore, include adequate soil exploration {*see* good practice [6-2(2)]} with due attention being paid to any weaker stratum below the level of the footing. Another limitation is the concerning of the effect of sizc of foundation. For clayey soils the bearing capacity (from shear consideration) for a larger foundation is almost the same as that for the smaller test plate. But in dense sandy soils the bearing capacity increases with the size of the foundation. Thus tests with smaller size plate tend to give conservative values in dense sandy soils. It may, therefore, be necessary to test with plates of at least three sizes and the bearing capacity results extrapolated for the size of the actual foundation (minimum dimensions in the case of rectangular footings).

n) *Laboratory investigation* — This gives numerical values for strength, stiffness and consolidation parameters apart from the description and classification of different soil layers.

p) *In-situ permeability test* — In case of high water table and construction extending below the water table, prior lowering of water table would be necessary. In such situations, this test may be required.

q) *Dynamic cone penetration test (DCPT)*

r) *Static cone penetration test (SCPT)* — Apart from the above methods there are few other sounding procedures like Light Cone Penetration Tests (LCPT) and Dynamic Probing Tests (DPT), in which similar sounding techniques as in the case of DCPT are used, probably more effectively. Hydraulic feed of 20 t capacity helps to obtain data even from hard soils. For small projects 10 t hydraulic rig may suffice.

3.2.2 *Number and Disposition of Test Locations*

The number and disposition of various tests shall depend upon type of structure/buildings and the soil strata variations in the area. General guidelines are, however, given below:

a) For a compact building site covering an area of about 0.4 hectare, one borehole or trial pit in each corner and one in the centre should be adequate.

b) For smaller and less important buildings, even one borehole or trial pit in the centre will suffice.

c) For very large areas covering industrial and residential colonies, the geological nature of the terrain will help in deciding the number of boreholes and trial pits. For various commercial, industrial, infrastructure, power plants, cement plants, petrochemical plants,

steel plants, pump house on shore or offshore. etc, number of boreholes and/or trial pits should be decided considering the importance of structure and type as well as uniformity of strata. As a guide, dynamic or static cone penetration tests may be performed at every 100 m by dividing the area in a grid pattern and the number of boreholes or trial pits may be decided by examining the variation in the penetration curves. The cone penetration tests may not be possible at sites having generally gravelly/bouldery strata. In such cases, geophysical methods may be resorted to.

3.2.3 *Depth of Exploration*

The depth of exploration required depends on the type of proposed structure, its total weight, the size, shape and disposition of the loaded areas, soil profile, and the physical properties of the soil that constitutes each individual stratum. The borings should be extended to strata of adequate bearing capacity and should penetrate all deposits which are unsuitable for foundation purposes, such as, unconsolidated fill, peat, organic silt and very soft and compressible clay. Normally, it should be one and a half times the width of the footing below foundation level. In certain cases, it may be necessary to take at least one borehole or cone test or both to twice the width of the foundation. If a number of loaded areas are in close proximity the effect of each is additive. In such cases, the whole of the area may be considered as loaded and exploration should be carried out up to one and a half times the lower dimension. In weak soils, the exploration should be continued to a depth at which the loads can be carried by the stratum in question without undesirable settlement and shear failure. In any case, the depth to which seasonal variations affect the soil should be regarded as the minimum depth for the exploration of sites. But where industrial processes affect the soil characteristics, this depth may be more. The presence of fast growing and water seeking trees also contributes to the weathering processes.

NOTE — Examples of fast growing and water seeking trees are Banyan (*Ficusbengalensis*), Pipal (*Ficusreligiosa*) and Neem (*Azadirachtaindica*).

3.2.3.1 An estimate of the variation with depth of the vertical normal stress in the soil arising from foundation loads may be made on the basis of elastic theory. The net loading intensity at any level below a foundation may be obtained approximately by assuming a spread of load of two vertical to one horizontal from all sides of the foundations, due allowance being made for the overlapping effects of load from closely spaced footings. As a general guidance, the depth of exploration at the start of the work may be decided as given in Table 1, which may be modified as exploration proceeds, if required. However, for industrial plant and other main structures, the depth of exploration may be decided depending upon importance of structure, loading conditions and type as well as uniformity of strata. For piles or piers, the depth shall be at least $\frac{2}{3}L$ below the anticipated tip (that is, termination of pile) or 5.0 m in rock with rock quality designation (RQD) ≥ 50 percent, whichever is earlier.

Table 1 Depth of Exploration
(*Clause* 3.2.3.1)

Sl No. (1)	Type of Foundation (2)	Depth of Exploration *D* (3)
i)	Isolated spread footing or raft	One and a half times the width (*B*) (*see* Fig. 1)
ii)	Adjacent footings with clear spacing less than twice the width	One and a half times the length (*L*) of the footing (*see* Fig. 1)
iii)	Adjacent rows of footings	*See* Fig. 1
iv)	Pile and well foundations	To a depth of one and a half times the width of structure from the bearing (tip of pile or bottom of well)
v)	a) Road cuts	Equal to the bottom width of the cut
	b) Fill	2 m below ground level or equal to the height of the fill, whichever is greater

3.2.4 *Vertical Interval for Field Tests*

Normally, once the type of foundation is decided as shallow footings based on initial findings, the test intervals shall be close to almost continuous at least for a depth equal to 1.5 times the foundation width.

Similarly, in the case of pile foundations, the test intervals shall be significantly small within a depth range of eight times the pile diameter above the pile tip and five times the pile diameter below the pile tip until incompressible stratum is encountered and confined geologically.

In case of housing colonies, the depth of borehole may be kept as 40 m or 5 m in rock with rock quality designation RQD ≥ 25 percent, whichever is earlier.

In the case of ground improvement programme like pre-loading, stone columns, compaction, etc, the field tests and sampling shall be almost continuous so that presence of thin soil layers of different texture can be identified.

3.3 Choice of Method for Site Exploration

The choice of the method depends on the following factors.

3.3.1 *Nature of Ground*

a) *Soils* — In clayey soils, borings are suitable for

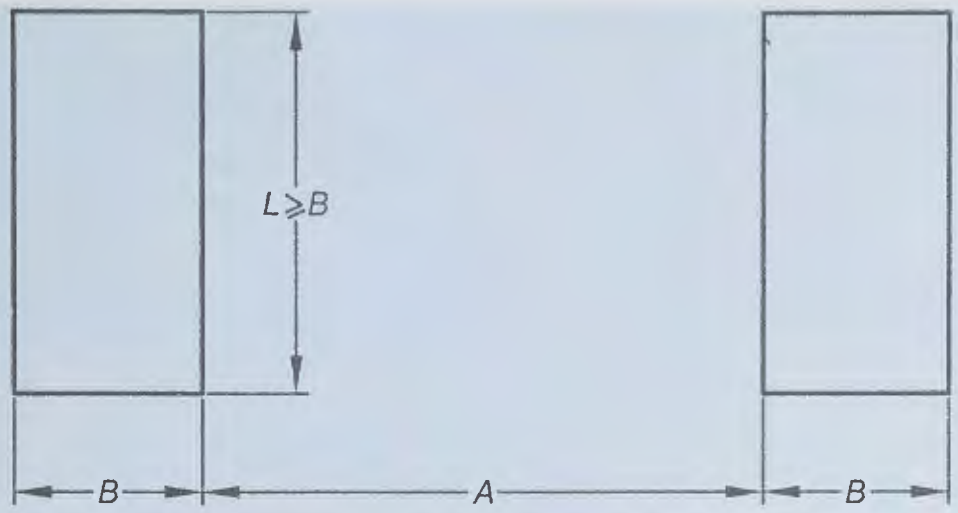

$D = 1\frac{1}{2}\,B$ FOR $A \geq 4B$

$D = 1\frac{1}{2}\,L$ FOR $A < 2B$

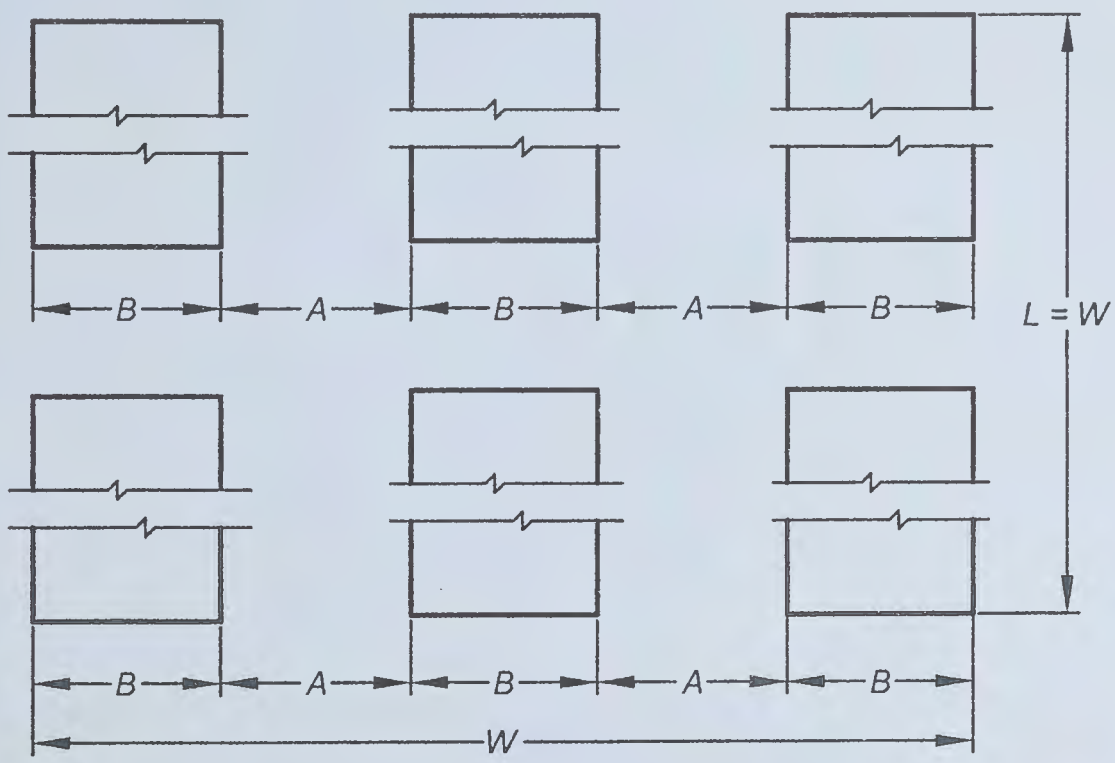

$D = 4\frac{1}{2}\,B$ FOR $A < 2B$

$D = 3B$ FOR $A > 2B$

$D = 1\frac{1}{2}B$ FOR $A \geq 4B$

FIG. 1 DEPTH OF EXPLORATION

deep exploration and pits for shallow exploration. In case of soft sensitive clayey soils, field vane shear test may be carried out with advantage.

In sandy soils, boring is easy but special equipment, such as, Bishop or Osterberg piston samplers should be used for taking undisturbed samples below the water table. Where necessary, some form of ground water lowering is used. Standard penetration test, dynamic cone penetration test and static cone penetration test are used to assess engineering properties.

b) *Gravel-boulder deposits* — In the deposits where gravel-boulder proportion is large (>30 percent), the subsoil strata should be explored by open trial pits of about 5 m × 5 m but in no case less than 2 m × 2 m. The depth of excavation may be up to 6 m. For determining strata characteristics, *in-situ* tests should be preferred. For shear characteristics and allowable soil pressure, pressure meter tests, load tests on cast *in-situ* footing and *in-situ* shear tests that is, boulder-boulder test or concrete-boulder test are more appropriate. For detailed information on these tests reference shall be made to good practice [6-2(3)]. Depending on the structure, if required, the strata may be explored by drilling borehole using suitable method.

c) *Rocks* — Core drillings are suitable in hard rocks and pits in soft rocks. Core borings are suitable for the identification of types of rock, but they provide limited data on joints and fissures. NX borehole camera is useful to photograph the stratification in drilled boreholes. For obtaining core, double tube core barrel with hydraulic feed is preferred. Triple tube core barrel may be used in fragmented or failure or sheared rock. Depending upon the design requirements, large diameter drilling may be explored if feasible.

3.3.2 *Topography*

In hilly country, the choice between vertical openings (for example, borings and trial pits) and horizontal openings (for example, headings) may depend on the geological structure, since steeply inclined strata are most effectively explored by headings and horizontal strata by trial pits or borings. Swamps and areas overlain by water are best explored by borings which may require use of a floating craft.

3.3.3 *Cost*

The cost of investigation varies depending upon project size, stratigraphy, location, marshy areas' access or approaches, etc. The data to be obtained for founding purpose, with a view to reducing or minimizing the surprises, is however, important. It also helps in solutions in respect of selection of appropriate type of foundation, construction materials, etc. For deep exploration, borings are usual, as deep shafts are costly. For shallow exploration in soil, the choice between pits and borings will depend on the nature of the ground and the information required by shallow exploration in rock; the cost of bringing a core drill to the site will be justified only, if several holes are required; otherwise, trial pits will be more economical.

3.4 Sampling and Testing

3.4.1 *Methods of Sampling*

a) *Disturbed samples* — These are taken by methods which modify or destroy the natural structure of the material though with suitable precautions the natural moisture content can be preserved.

b) *Undisturbed samples (UDS)* — These are taken by methods which preserve the structure and properties of the material. Thin walled tube samples may be used for undisturbed samples in soils of medium strength and tests for the same may be carried out in accordance with good practice [6-2(1)]. Minimum one UDS shall be obtained from each cohesive layer. For thick layers, the UDS shall be taken at every 3 m intervals. UDS need not be taken from cohesion less soils (silty sand, sand and gravel).

NOTE — In case of loose sandy soils and soft soils, specially below water table it may not be possible to take undisturbed sample, in which case other suitable methods may be adopted for exploration.

c) *Representative samples* — These samples have all their constituent parts preserved, but may or may not be structurally disturbed. Washed samples from rotary boring should not be collected.

3.4.1.1 The methods usually employed are:

Sl No. (1)	*Nature of Ground* (2)	*Type of Sample* (3)	*Method of Sampling* (4)
i)	Soil	a) Disturbed	Chunk samples Auger samples (for example, in clay) Shell samples (for example, in sand)
		b) Undisturbed	Chunk samples Tube samples
ii)	Rock	a) Disturbed	Wash samples from percussion or rotary drilling
		b) Undisturbed	Core barrel sampling

3.4.2 *Soil Samples*

a) *Disturbed soil samples* — The mass of sample generally required for testing purposes is given in Table 2.

Table 2 Mass of Soil Sample Required
[*Clause* 3.4.2(a)]

Sl No. (1)	Purpose of Sample (2)	Type (3)	Mass of Sample Required kg (4)
i)	Soil identification, natural moisture content tests, mechanical analysis and index properties	a) Cohesive soil	1
	Chemical tests	b) Sands and gravels	3
ii)	Compaction tests	a) Cohesive soils and sands	12.5
		b) Gravely soils	25
iii)	Comprehensive examination of construction materials including stabilization	a) Cohesive soils and sands	25 to 50
		b) Gravely soils	50 to 100

NOTES

1 The schedule for laboratory tests shall include the representative of the sub-strata layer for testing physical, engineering and chemical properties of soil and rock.

2 Additional tests, if any required for assessing suitability of borrow material may also be included.

b) *Undisturbed soil samples* — The core diameter of the sample shall be 75 mm to 100 mm diameter and it shall preferably be 300 mm long. The upper few millimetres of the sample should be rejected as the soil at the bottom of the borehole usually gets disturbed by the boring tools.

3.4.3 *Rock Samples*

a) *Disturbed samples* — The sludge from percussion borings, or from rotary borings which have failed to yield a core, may be taken as a disturbed sample.

b) Undisturbed samples

1) *Block samples* — Such samples taken from the rock formation shall be dressed to a size convenient for packing to about 90 mm × 75 mm × 50 mm.

2) *Core samples* — Cores of rock shall be taken by means of rotary drills fitted with a coring bit with core retainer {*see also* good practice [6-2(4)]}.

3.4.4 *Water Samples*

Water samples have to be collected for chemical analysis. In cases, where mud circulation is used for advancing and stabilizing the boreholes, water samples are to be collected only after 24 h of completion of the borehole. The other option is to collect water samples from open wells in the close proximity. The sample shall be collected in a plastic container (about 500 ml) with airtight cover.

3.4.5 *Protection, Handling and Labelling of Samples*

Care should be taken in protecting, handling and subsequent transport of samples and in their full labelling, so that samples can be received in a fit state for examination and testing, and can be correctly recognized as coming from a specified trial pit or boring.

3.4.6 *Examination and Testing of Samples*

3.4.6.1 The following tests shall be carried out in accordance with accepted standard [6-2(5)]:

a) *Tests on undisturbed and disturbed samples*

1) Visual and engineering classification;
2) Sieve analysis and hydrometer analysis;
3) Liquid, plastic, and shrinkage limits;
4) Specific gravity;
5) Chemical analysis (sulphate, chloride and *p*H content of soil and ground water);
6) Swell pressure and free swell index determination;
7) Proctor compaction test; and
8) California bearing ratio.

b) *Test on undisturbed samples*

1) Bulk density and moisture content;
2) Relative density (for sand);
3) Unconfined compression test;
4) Box shear test (in case of cohesionless and c-ϕ soil);
5) Triaxial shear tests (depending on the type of soil and field conditions on undisturbed or remoulded samples):
   i) Unconsolidated undrained,
   ii) Consolidated undrained test with the measurement of pore water pressure, and
   iii) Consolidated drained;
6) Consolidation test; and
7) Laboratory permeability test.

c) *Test on rock samples*

1) Visual classification;
2) Water absorption, porosity and density;
3) Specific gravity;
4) Hardness;
5) Slake durability;
6) Unconfined compression test (both saturated and at *in-situ* water content);
7) Point load strength index; and
8) Deformability test (both saturated and dry samples).

NOTE — These tests may be reduced according to engineering requirements.

3.5 Soil Investigation Report

The soil investigation report shall generally include the following:

a) Scope of the investigation;
b) Method of drilling of borehole;
c) Sampling of boreholes;
d) Visual description of soil samples;
e) Ground levels along with ground water table level;
f) Test results (both laboratory and field);
g) Photographs of samples collected with descriptions;
h) Photo graphs of laboratory test samples after testing;
j) General observations of vicinity (streams, foundation system adopted, etc);
k) Longitudinal and transverse cross-section profiles of substrata;

m) Analysis of field and laboratory test results;

n) Sample calculations for arriving at the allowable bearing pressure and pile capacities, if included in the scope of work; and

p) Recommendations, if included in the scope of work.

4 CLASSIFICATION AND IDENTIFICATION OF SOILS

The classification and identification of soils for engineering purposes shall be in accordance with accepted standard [6-2(6)].

5 MATERIALS

5.1 Cement, coarse aggregate, fine aggregate, lime, *Surkhi,* steel, timber and other materials go into the construction of foundations shall conform to the requirements of Part 5 'Building Materials' of the Code.

5.2 Protection Against Deterioration of Materials

Where a foundation is to be in contact with soil, water or air, that is, in a condition conducive to the deterioration of the materials of the foundation, protective measures shall be taken to minimize the deterioration of the materials.

5.2.1 *Concrete*

The concrete used for construction shall be in accordance with Part 6 'Structural Design, Section 5 Concrete' of the Code.

5.2.2 *Timber*

Where timber is exposed to soil, it shall be treated in accordance with good practice [6-2(7)].

6 GENERAL REQUIREMENTS FOR FOUNDATIONS/SUBSTRUCTURES FOR BUILDINGS

6.1 Types of Foundations

Types of foundations for buildings covered in this Section are:

a) *Shallow foundations* (*see* **7**)

   1) Pad or spread and strip foundations (*see* **7.2**),
   2) Raft foundations (*see* **7.4**),
   3) Ring foundations (*see* **7.5**), and
   4) Shell foundations (*see* **7.6**).

b) *Deep foundations*

   1) Pile Foundations
      i) Driven cast *in-situ* concrete piles (*see* **8**), .
      ii) Bored cast *in-situ* concrete piles (*see* **8**),
      iii) Driven precast concrete piles (*see* **9**),
      iv) Precast concrete piles in prebored holes (*see* **10**),
      v) Under-reamed concrete piles (*see* **11**),
      vi) Timber piles (*see* **12**), and
      vii) Spun piles.

      NOTE — Spun piles are used in deep marshy soils as conventional pile installation beyond 50 m in such soils is very difficult.

c) *Other foundations/substructures/foundations for special structure*

   1) Pier foundations (*see* **13.1**),
   2) Diaphragm walls (*see* **13.2**), and
   3) Machine foundations (*see* **13.2**).

6.2 Depth of Foundations

6.2.1 The depth to which foundations should be carried depends upon the following principal factors:

a) Securing of adequate allowable capacity.

b) In the case of clayey soils, penetration below the zone where shrinkage and swelling due to seasonal weather changes, and due to trees and shrubs are likely to cause appreciable movements.

c) In fine sands and silts, penetration below the zone in which trouble may be expected from frost.

d) Maximum depth of scour, wherever relevant, should also be considered and the foundation should be located sufficiently below this depth.

e) Other factors such as ground movements and heat transmitted from the building to the supporting ground may be important.

6.2.2 All foundations shall extend to a depth of at least 500 mm below natural ground level. On rock or such other weather resisting natural ground, removal of the top soil may be all that is required. In such cases, the surface shall be cleaned and, if necessary, stepped or otherwise prepared so as to provide a suitable bearing and thus prevent slipping or other unwanted movements.

6.2.3 Where there is excavation, ditch pond, water course, filled up ground or similar condition adjoining or adjacent to the subsoil on which the structure is to be erected and which is likely to impair the stability of structure, either the foundation of such structure shall be carried down to a depth beyond the detrimental influence of such conditions, or retaining walls or similar works shall be constructed for the purpose of shielding from their effects.

6.2.4 A foundation in any type of soil shall be below the zone significantly weakened by root holes or cavities produced by burrowing animals or works. The depth shall also be enough to prevent the rainwater scouring below the footings.

6.2.5 Clay soils, like black cotton soils, are seasonally affected by drying, shrinkage and cracking in dry and hot weather, and by swelling in the following wet weather to a depth which will vary according to the nature of the clay and the climatic condition of the region. It is necessary in these soils, either to place the foundation bearing at such a depth where the effects of seasonal changes are not important or to make the foundation capable of eliminating the undesirable effects due to relative movement by providing flexible type of construction or rigid foundations. Adequate load counteracting against swelling pressures also provide satisfactory foundations.

6.3 Foundation at Different Levels

6.3.1 Where footings are adjacent to sloping ground or where the bottoms of the footings of a structure are at different levels or at levels different from those of the footings of adjoining structures, the depth of the footings shall be such that the difference in footing elevations shall be subject to the following limitations:

a) When the ground surface slopes downward adjacent to a footing, the sloping surface shall not intersect a frustum of bearing material under the footing having sides which make an angle of 30° with the horizontal for soil and horizontal distance from the lower edge of the footing to the sloping surface shall be at least 600 mm for rock and 900 mm for soil (*see* Fig. 2).

b) In the case of footings in granular soil, a line drawn between the lower adjacent edges of adjacent footings shall not have a steeper slope than one vertical to two horizontal (*see* Fig. 3).

c) In case of footing in clayey soils a line drawn between the lower adjacent edge of the upper footing and the upper adjacent edge of lower footing shall not have a steeper slope than one vertical to two horizontal (*see* Fig. 4).

6.3.2 The requirement given in **6.3.1** shall not apply in the condition where adequate provision is made for the lateral support (such as with retaining walls) of the material supporting the higher footing.

6.4 Effect of Seasonal Weather Changes

During periods of hot, dry weather a deficiency of water develops near the ground surface and in clay soils, that is associated with a decrease of volume or ground shrinkage and the development of cracks. The shrinkage of clay will be increased by drying effect produced by fast growing and water seeking trees. The range of influence depends on size and number of trees and it increase during dry periods. In general, it is desirable that there shall be a distance of at least 8 m between such trees. Boiler installations, furnaces, kilns, underground cables and refrigeration installations and other artificial sources of heat may also cause increased volume changes of clay by drying out the ground beneath them, the drying out can be to a substantial depth. Special precautions either in the form of insulation or otherwise should be taken. In periods of wet weather, clay soils swell and the cracks lend to close, the water deficiency developed in the previous

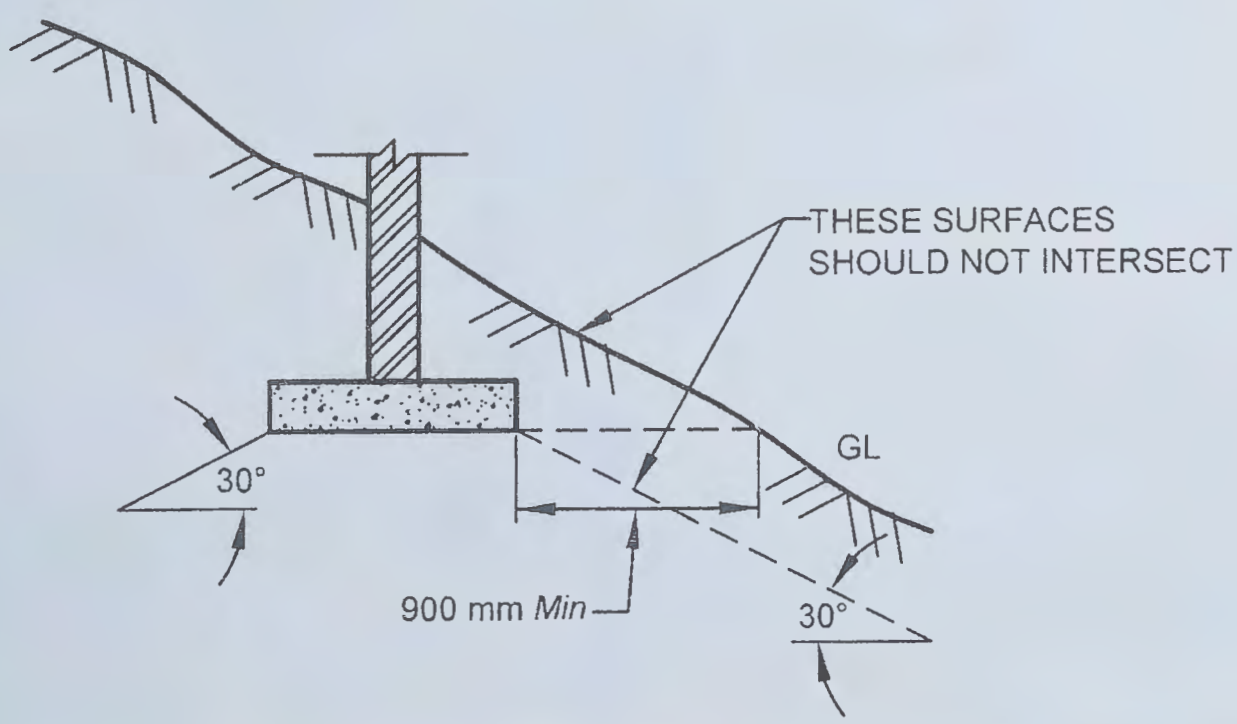

FIG. 2 FOOTING IN SLOPING GROUND

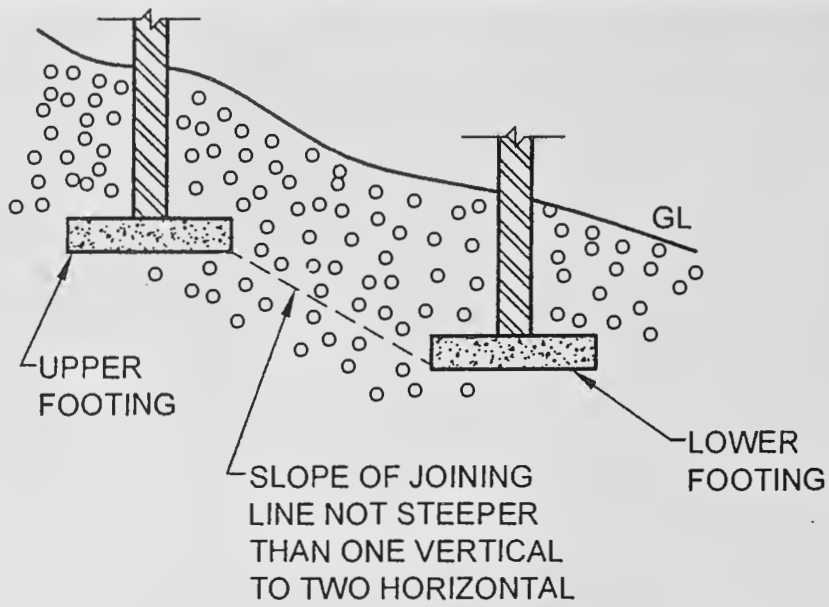

FIG. 3 FOOTING IN GRANULAR SOIL

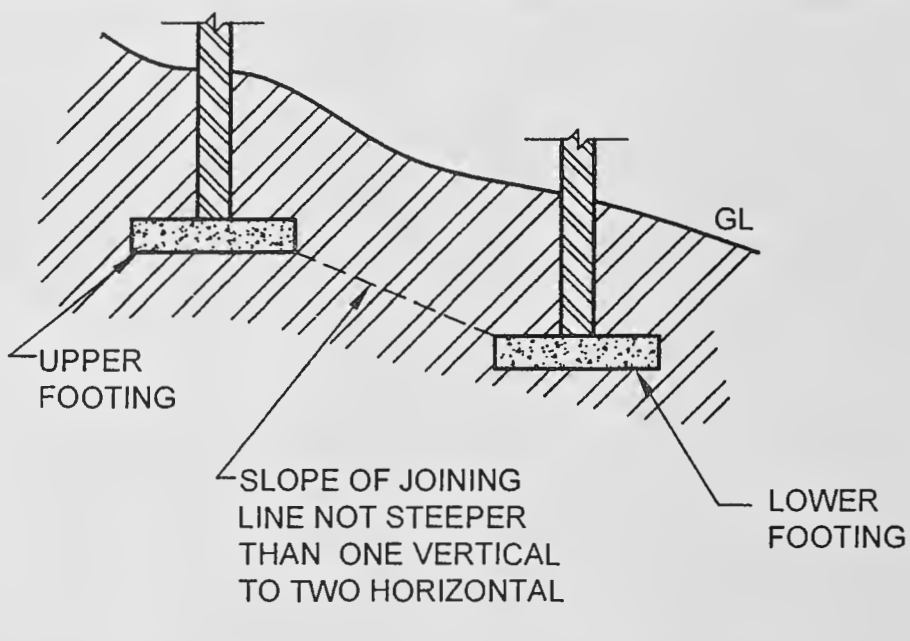

FIG. 4 FOOTING IN CLAYEY SOIL

dry periods may be partially replenished and a subsurface zone or zones deficient in water may persist for many years. Leakage from water mains and underground sewers may also result in large volume changes. Therefore, special care shall be taken to prevent such leakages.

6.5 Effect of Mass Movements of Ground in Unstable Areas

In certain areas mass movements of the ground are liable to occur from causes independent of the loads applied by the foundations of structures. These include mining subsidence, landslides on unstable slopes and creep on clay slopes.

6.5.1 *Mining Subsidence*

In mining areas, subsidence of the ground beneath a building or any other structure is liable to occur. The magnitude of the movement and its distribution over the area are likely to be uncertain and attention shall, therefore, be directed to make the foundations and structures sufficiently rigid and strong to withstand the probable worst loading condition and probable ground movements. Long continuous buildings should be avoided in such areas and large building in such area should be divided into independent sections of suitable size, each with its own foundations. Expert advice from appropriate mining authority should be sought.

NOTE — For prediction of subsidence in coal mines, guidelines as given in the good practice [6-2(8)] may be referred.

6.5.2 *Landslide Prone Areas*

The construction of structures on slopes which are suspected of being unstable and are subject to landslip shall be avoided.

On sloping ground on clay soils, there is always a tendency for the upper layers of soil to move downhill, depending on type of soil, the angle of slope, climatic

conditions, etc. In some cases, the uneven surface of the slope on a virgin ground will indicate that the area is subject to small land slips and, therefore, if used for foundation, will obviously necessitate special design consideration.

Where there may be creep of the surface layer of the soil, protection against creep may be obtained by following special design considerations.

On sloping sites, spread foundations shall be on a horizontal bearing and stepped. At all changes of levels, they shall be lapped at the steps for a distance at least equal to the thickness of the foundation or twice the height of the step, whichever is greater. The steps shall not be of greater height than the thickness of the foundation, unless special precautions are taken.

Cuttings, excavations or sloping ground near and below foundation level may increase the possibility of shear failure of the soil. The foundation shall be well beyond the zone of such shear failure.

If the probable failure surface intersects a retaining wall or other revetment, the latter shall be made strong enough to resist any unbalanced thrust. In case of doubt as to the suitability of the natural slopes or cuttings, the structure shall be kept well away from the top of the slopes, or the slopes shall be stabilized.

Cuttings and excavations adjoining foundations reduce stability and increase the likelihood of differential settlement. Their effect should be investigated not only when they exist but also when there is possibility that they are made subsequently.

Where a structure is to be placed on sloping ground, additional complications are introduced. The ground itself, particularly if of clay, may be subject to creep or other forms of instability, which may be enhanced if the strata dip in the same direction as the ground surface. If the slope of the ground is large, the overall stability of the slope and substructure may be affected. These aspects should be carefully investigated.

6.6 Precautions for Foundations on Inclined Strata

In the case of inclined strata, if they dip towards a cutting of basement, it may be necessary to carry foundation below the possible slip planes, land drainage also requires special consideration, particularly on the uphill side of a structure to divert the natural flow of water away from the foundations.

6.7 Strata of Varying Thickness

Strata of varying thickness, even at appreciable depth, may increase differential settlement. Where necessary, calculations should be made of the estimated settlement from different thickness of strata and the structure should be designed accordingly. When there is large change of thickness of soft strata, the stability of foundation may be affected. Site investigations should, therefore, ensure detection of significant variations in strata thickness.

6.8 Layers of Softer Material

Some soils and rocks have thin layers of softer material between layers of harder material, which may not be detected unless thorough investigation is carried out. The softer layers may undergo marked changes in properties if the loading on them is increased or decreased by the proposed construction or affected by related changes in ground water conditions. These should be taken into account.

6.9 Spacing Between Existing and New Foundation

The deeper the new foundation and the nearer to the existing it is located, the greater the damage is likely to be. The minimum horizontal spacing between existing and new footings shall be equal to the width of the wider one. While the adoption of such provision shall help minimizing damage to adjacent foundation, an analysis of bearing capacity and settlement shall be carried out to have an appreciation of the effect on the adjacent existing foundation.

6.10 Preliminary Work for Construction

6.10.1 The construction of access roads, main sewers and drains should preferably be completed before commencing the work of foundations; alternatively, sufficient precautions shall be taken to protect the already constructed foundations during subsequent work.

6.10.2 *Clearance of Site*

Any obstacles, including the stump of trees, likely to interfere with the work shall be removed. Holes left by digging, such as those due to removal of old foundation, uprooted trees, burrowing by animals, etc, shall be back-filled with soil and well compacted.

6.10.3 *Drainage*

If the site of a structure is such that surface water shall drain towards it, land may be dressed or drains laid to divert the water away from the site.

6.10.4 *Setting Out*

Generally the site shall be levelled before the layout of foundations are set out. In case of sloping terrain, care shall be taken to ensure that the dimensions on plans are set out correctly in one or more horizontal planes.

6.10.5 The layout of foundations shall be set out with steel tapes. Angles should be set out with theodolites

in the case of important and intricate structures where the length of area exceeds 16 m. In other cases these shall be set out by measurement of sides. In rectangular or square setting out, diagonals shall be checked to ensure accuracy. The setting out of walls shall be facilitated by permanent row of pillars, parallel to and at a suitable distance beyond the periphery of the building. The pillars shall be located at junctions of cross walls with the peripheral line of pillars. The centre lines of the cross walls shall be extended to and permanently erected on the plastered tops of the corresponding sets of pillars. The datum lines parallel to and at the known fixed distance from the centre lines of the external walls also be permanently worked on the corresponding rows of pillars to pillars to serve as checks on the accuracy of the work as it proceeds. The tops of these pillars shall be at the same level and preferably at the plinth or floor level. The pillars shall be of sizes not less than 250 mm wide and shall be bedded sufficiently deep into ground, so that they are not disturbed.

6.11 Protection of Excavation

6.11.1 The protection of excavastion during construction of timbering and dewatering operations, where necessary, shall be done in accordance with [6-2(9)].

6.11.2 After excavation, the bottom of the excavation shall be cleared of all loose soil and rubbish and shall be levelled, where necessary. The bed shall be wetted and compacted by heavy rammers to an even surface.

6.11.3 Excavation in clay or other soils that are liable to be effected by exposure to atmosphere shall, wherever possible, be concreted as soon as they are dug. Alternatively, the bottom of the excavation shall be protected immediately by 8 cm thick layer of cement concrete not leaner than mix 1: 5 : 10 over which shall come the foundation concrete; or in order to obtain a dry hard bottom, the last excavation of about 10 cm shall be removed only before concreting.

6.11.4 The refilling of the excavation shall he done with care so as not to disturb the constructed foundation, and shall be compacted in layers not exceeding 15 cm thick with sprinkling of minimum quantity of water necessary for proper compaction.

6.12 Alterations During Construction

a) Where during construction the soil or rock to which foundation is to transfer loads is found not to be the type or in the condition assumed, the foundation shall be redesigned and constructed for the existing type or conditions and the Authority notified.

b) Where a foundation bears on gravel, sand or silt and where the highest level of the ground water is or likely to be higher than an elevation defined by bearing surface minus the width of the footing, the bearing pressure shall be suitably altered.

c) Where the foundation has not been placed or located as indicated earlier or is damaged or bears on a soil whose properties may be adversely changed by climatic and construction conditions, the error shall be corrected, the damaged portion repaired or the design capacity of the affected foundation recalculated to the satisfaction of the Authority.

d) Where a foundation is placed, and if the results of a load test so indicate, the design of the foundation shall be modified to ensure structural stability of the same.

7 SHALLOW FOUNDATIONS

7.1 Design Information

For the satisfactory design of foundations, the following information is necessary:

a) Type and condition of the soil or rock to which the foundation transfers the loads;

b) General layout of the columns and load-bearing walls showing the estimated loads, including moments and torques due to various loads (dead load, imposed load, wind load, seismic load) coming on the foundation units;

c) Allowable bearing pressure of the soils;

d) Changes in ground water level, drainage and flooding conditions and also the chemical conditions of the subsoil water, particularly with respect to its sulphate content;

e) Behaviour of the buildings, topography and environment/surroundings adjacent to the site, the type and depths of foundations and the bearing pressure assumed; and

f) Seismic zone of the region.

7.2 Design Considerations

7.2.1 *Design Loads*

The foundation shall be proportioned for the following combination of loads:

a) Dead load + Imposed load; and

b) Dead load + Imposed load + Wind load or seismic loads, whichever is critical.

For details, reference shall be made to Part 6 'Structural Design, Section 1 Loads, Forces and Effects' of the Code.

NOTE — For shallow foundations on coarse grained soils, settlements shall be estimated corresponding to **7.2.1** (b) and for foundations on fine grained soils, the settlement shall be estimated corresponding to permanent loads only. Permanent loads shall be in accordance with good practice [6-2(10)].

7.2.2 *Allowable Bearing Pressure*

The allowable bearing pressure shall be taken as either of the following, whichever is less:

a) The safe bearing capacity on the basis of shear strength characteristics of soil, or

b) The bearing pressure that the soil can take without exceeding the permissible settlement (*see* **7.2.3**).

7.2.2.1 *Bearing capacity by calculation*

Where the engineering properties of the soil are available, that is, cohesion, angle of internal friction, density, etc, the bearing capacity shall be calculated from stability considerations of shear; factor of safety of 2.5 shall be adopted for safe bearing capacity. The effect of interference of different foundations should be taken into account. The procedure for determining the ultimate bearing capacity and bearing pressure of shallow foundations based on shear and allowable settlement criteria shall be in accordance with good practice [6-2(11)]. Depth factor correction is to be applied only when backfilling is done with proper compaction.

7.2.2.2 *Field method for determining allowable bearing pressure*

Where appropriate, plate load tests can be performed and allowable pressure determined as per accepted standard [6-2(12)]. The allowable bearing pressure for sandy soils may also be obtained by loading tests. When such tests cannot be done, the allowable bearing pressure for sands may be determined using penetration test.

7.2.2.3 Where the bearing materials directly under a foundation overlie a stratum having smaller safe bearing capacity, these smaller values shall not be exceeded at the level of such stratum.

7.2.2.4 *Effect of wind and seismic force*

7.2.2.4.1 Where the bearing pressure due to wind is less than 25 percent of that due to dead and imposed loads, it may be neglected in design. Where this exceeds 25 percent, foundations may be so proportioned that the pressure due to combined dead, imposed and wind loads does not exceed the allowable bearing pressure by more than 25 percent.

7.2.2.4.2 When earthquake forces are considered for the computation of design loads, the permissible increase in bearing pressure of pertaining soil shall be as given in **5.3.3.5** of Part 6 'Structural Design, Section 1 Loads, Forces and Effects' of the Code, depending upon the type of foundation of the structure and the type of soil.

7.2.2.5 *Bearing capacity of buried strata*

If the base of a foundation is close enough to a strata of lower bearing capacity, the latter may fail due to excess pressure transmitted to it from above. Care should be taken to see that the pressure transmitted to the lower strata is within the prescribed safe limits. When the footings are closely spaced, the pressure transmitted to the underlying soil will overlap. In such cases, the pressure in the overlapped zones will have to be considered. With normal foundations, it is sufficiently accurate to estimate the bearing pressure on the underlying layers by assuming the load to be spread at a slope of 2 (vertical) to 1 (horizontal).

7.2.3 *Settlement*

The permissible values of total and differential settlement for a given type of structure may be taken as given in Table 3. Total settlements of foundation due to net imposed loads shall be estimated in accordance with good practice [6-2(13)]. The following causes responsible for producing the settlement shall be investigated and taken into account.

a) *Causes of settlement*

1) Elastic compression of the foundation and the underlying soil,
2) Consolidation including secondary compression,
3) *Ground water lowering* — Specially repeated lowering and raising of water level in loose granular soils tend to compact the soil and cause settlement of the footings. Prolonged lowering of the water table in fine grained soils may introduce settlement because of the extrusion of water from the voids. Pumping water or draining water by tiles or pipes from granular soils without an adequate mat of filter material as protection may, in a period of time, carry a sufficient amount of fine particles away from the soil and cause settlement.
4) Seasonal swelling and shrinkage of expansive clays.
5) Ground movement on earth slope. for example, surface erosion, slow creep or landslides.
6) Other causes, such as adjacent excavation, mining, subsidence and underground erosion.

Table 3 Permissible Differential Settlements and Tilt (Angular Distortion) for Shallow Foundations in Soils
(*Clause* 7.2.3)

Sl No.	Type of Structure	Isolated Foundations						Raft Foundations					
		Sand and Hard Clay			Plastic Clay			Sand and Hard Clay			Plastic Clay		
		Maximum Settlement	Differential Settlement	Angular Distortion	Maximum Settlement	Differential Settlement	Angular Distortion	Maximum Settlement	Differential Settlement	Angular Distortion	Maximum Settlement	Differential Settlement	Angular Distortion
		mm	mm		mm	mm		mm	mm		mm	mm	
(1)	(2)	(3)	(4)	(5)	(6)	(7)	(8)	(9)	(10)	(11)	(12)	(13)	(14)
i)	For steel structure	50	.003 3*L*	1/300	50	.003 3*L*	1/300	75	.003 3*L*	1/300	100	.003 3*L*	1/300
ii)	For reinforced concrete structures	75	.001 5*L*	1/500	75	.002*L*	1/500	75	.003 3*L*	1/300	125	.003 3*L*	1/300
iii)	For multistoreyed buildings:												
	a) RC or steel framed buildings with panel walls	60	.002*L*	1/500	75	.003L	1/300	75	.002 5*L*	1/300	125	.003 3*L*	1/300
	b) For load bearing walls												
	1) *L*/H=2[1]	60	.000 2*L*	1/5 000	60	.000 2*L*	1/5 000	← Not likely to be encountered →					
	2) *L*/H=7[1]	60	.000 4*L*	1/2 500	60	.000 4*L*	1/2 500						
iv)	For water towers and silos	50	.001 5*L*	1/666	75	.001 5*L*	1/666	100	.002 5*L*	1/400	125	.002 5*L*	1/400

[1] For intermediate ratios of *L*/*H*, the values can be interpolated.

NOTES

1 The values given in the table may be taken only as a guide and the permissible total settlement/different settlement and tilt (angular distortion) in each case should be decided as per requirements of the designer.

2 *L* denotes the length of deflected part of wall/raft or centre-to-centre distance between columns.

3 *H* denotes the height of wall from foundation footing.

b) *Causes of differential settlements*

1) Geological and physical non-uniformity or anomalies in type, structure, thickness, and density of the soil medium (pockets of sand in clay, clay lenses in sand, wedge like soil strata, that is, lenses in soil), an admixture of organic matter, peat, mud;

2) Non-uniform pressure distribution from foundation to the soil due to non-uniform loading and incomplete loading of the foundations;

3) Water regime at the construction site.

4) Overstressing of soil at adjacent site by heavy structures built next to light ones;

5) Overlap of stress distribution in soil from adjoining structures;

6) Unequal expansion of the soil due to excavation for footing;

7) Non-uniform development of extrusion settlements; and

8) Non-uniform structural disruptions or disturbance of soil due to freezing and thawing, swelling and softening and drying of soils.

7.2.4 *Shallow Foundations on Rocks*

Estimation of the safe bearing pressures of rocks for shallow foundations based on strength, allowable settlement and classification criteria; and also design and construction of shallow foundations on rocks shall be carried out in accordance with the good practice [6-2(14)].

7.3 Pad or Spread and Strip Foundations

7.3.1 In such type of foundations, wherever the resultant of the load deviates from the centre line by more than 1/6 of its least dimension at the base of footing, it should be suitably reinforced.

7.3.2 For continuous wall foundations (plain or reinforced) adequate reinforcement should be provided particularly at places where there is abrupt change in magnitude of load or variation in ground support.

7.3.3 On sloping sites the foundation should have a horizontal bearing and stepped and lapped at changes

of levels for a distance at least equal to the thickness of foundation or twice the height of step, whichever is greater. The steps should not be of greater height than thickness of the foundations.

7.3.4 *Ground Beams*

The foundation can also have the ground beam for transmitting the load. The ground beam carrying a load bearing wall should be designed to act with the wall forming a composite beam, when both are of reinforced concrete and structurally connected by reinforcement. The ground beam of reinforced concrete structurally connected to reinforced brick work can also be used.

7.3.5 *Dimensions of Foundation*

The dimensions of the foundation in plan should be such as to support loads as given in good practice [6-2(10)]. The width of the footings shall be such that maximum stress in the concrete or masonry is within the permissible limits. The width of wall foundation (in mm) shall not be less than that given by:

$$B = W + 300$$

where

B = width at base, in mm; and

W = width of supported wall, in mm.

7.3.6 In the base of foundations for masonry foundation it is preferable to have the steps in multiples of thickness of masonry unit.

7.3.7 The plan dimensions of excavation for foundations should be wide enough to ensure safe and efficient working in accordance with good practice [6-2(9)].

7.3.8 Unreinforced foundation may be of concrete or masonry (stone or brick) provided that angular spread of load from the base of column/wall or bed plate to the outer edge of the ground bearing is not more than 1 vertical to 1/2 horizontal for masonry or 1 vertical to 1 horizontal for cement concrete and 1 vertical to 2/3 horizontal for lime concrete. The minimum thickness of the foundation of the edge should not be less than 150 mm. In case the depth to transfer the load to the ground bearing is less than the permissible angle of spread, the foundations should be reinforced.

7.3.9 If the bottom of a pier is to be belled so as to increase its load carrying capacity such bell should be at least 300 mm thick at its edge. The sides should be sloped at an angle of not less than 45° with the horizontal. The least dimension should be 600 mm (circular, square or rectangular). The design should allow for the vertical tilt of the pier by 1 percent of its height.

7.3.10 If the allowable bearing capacity is available only at a greater depth, the foundation can be rested at a higher level for economic considerations and the difference in level between the base of foundation and the depth at which the allowable bearing capacity occurs can be filled up with either: (a) concrete of allowable compressive strength not less than the allowable bearing pressure, (b) incompressible fill material, for example, sand, gravel, etc, in which case the width of the fill should be more than the width of the foundation by an extent of dispersion of load from the base of the foundation on either side at the rate of 2 vertical to 1 horizontal.

7.3.11 The cement concrete foundation (plain or reinforced) should be designed in accordance with Part 6 'Structural Design, Section 5 Concrete, Subsection 5A Plain and Reinforced Concrete' of the Code and masonry foundation in accordance with Part 6 'Structural Design, Section 4 Masonry' of the Code.

7.3.12 *Thickness of Footing*

The thickness of different types of footings, if not designed according to **7.2**, should be as given in Table 4.

7.3.13 *Land Slip Area*

On a sloping site, spread foundation shall be on a horizontal bearing and stepped. At all changes of levels, they shall be lapped at the steps for a distance at least equal to the thickness of the foundation or twice the

Table 4 Thickness of Footings
(*Clause* 7.3.12)

Sl No. (1)	Type of Footings (2)	Thickness of Footings, *Min* (3)	Remarks (4)
i)	Masonry	a) 250 mm b) Twice the maximum projection from the face of the wall	Select the greater of the two values
ii)	Plain concrete:		
	a) For normal structures	a) 200 mm b) Twice the maximum offset in a stepped footing c) 300 mm	 For footings resting on soil For footings resting on top of the pile
	b) For lightly loaded structures	a) 150 mm b) 200 mm	Resting on soil Resting on pile
	Reinforced concrete	a) 150 mm b) 300 mm	Resting on soil Resting on pile

height of the step, whichever is greater. The steps shall not be of greater height than the thickness of the foundation unless special precautions are taken. On sloping ground on clay soils, there is always a tendency for the upper layers of soil to move downhill, depending on type of soil, the angle of slope, climatic conditions, etc. Special precautions are necessary to avoid such a failure.

7.3.14 In the foundations, the cover to the reinforcement shall be as prescribed in Part 6 'Structural Design, Section 5 Concrete, Subsection 5A Plain and Reinforced Concrete' of the Code for the applicable environment exposure condition.

7.3.15 For detailed information regarding preparation of ground work, reference shall be made to good practice [6-2(15)].

7.4 Raft Foundations

7.4.1 *Design Considerations*

Design provisions given in **7.2** shall generally apply.

7.4.1.1 The structural design of reinforced concrete rafts shall conform to Part 6 'Structural Design, Section 5 Concrete, Subsection 5A Plain and Reinforced Concrete' of the Code.

7.4.1.2 In the case of raft, whether resting on soil directly or on lean concrete, the cover to the reinforcement shall be as prescribed in Part 6 'Structural Design, Section 5 Concrete, Subsection 5A Plain and Reinforced Concrete' of the Code for the applicable environment exposure condition.

7.4.1.3 In case the structure supported by the raft consists of several parts with varying loads and heights, it is advisable to provide separation joints between these parts. Joints shall also be provided, wherever there is a change in the direction of the raft.

7.4.1.4 Foundations subject to heavy vibratory loads should preferably be isolated.

7.4.1.5 The minimum depth of foundation shall generally be not less than 1 m.

7.4.1.6 *Dimensional parameters*

The size and shape of the foundation adopted affect the magnitude of subgrade modulus and long term deformation of the supporting soil and this, in turn, influences the distribution of contact pressure. This aspect needs to be taken into consideration in the analysis.

7.4.1.7 *Eccentricity of loading*

A raft generally occupies the entire area of the building and often it is not feasible and rather uneconomical to proportion it coinciding the centroid of the raft with the line of action of the resultant force. In such cases, the effect of the eccentricity on contact pressure distribution shall be taken into consideration.

7.4.1.8 *Properties of supporting soil*

Distribution of contact pressure underneath a raft is affected by the physical characteristics of the soil supporting it. Consideration shall be given to the increased contact pressure developed along the edges of foundation on cohesive soils and the opposite effect on granular soils. Long term consolidation of deep soil layers shall be taken into account in the analysis. This may necessitate evaluation of contact pressure distribution both immediately after construction and after completion of the consolidation process. The design shall be based on the worst conditions.

7.4.1.9 *Rigidity of foundations*

Rigidity of the foundation tends to iron out uneven deformation and thereby modifies the contact pressure distribution. High order of rigidity is characterized by long moments and relatively small, uniform settlements. A rigid foundation may also generate high secondary stresses in structural members. The effect of rigidity shall be taken into account in analysis.

7.4.1.10 *Rigidity of the super structure*

Free response of the foundations to soil deformation is restricted by the rigidity of the superstructure. In the extreme case, a stiff structure may force a flexible foundation to behave as rigid. This aspect shall be considered to evaluate the validity of the contact pressure distribution.

7.4.1.11 *Modulus of elasticity and modulus of subgrade reaction*

Annex A enumerates the methods of determination of modulus of elasticity (E_s). The modulus of subgrade reaction (k) may be determined in accordance with Annex B .

7.4.2 *Necessary Information*

The following information is necessary for a satisfactory design and construction of a raft foundation:

a) Site plan showing the location of the proposed as well as the neighbouring structures;
b) Plan and cross-sections of building showing different floor levels, shafts and openings, etc, layout of loading bearing walls, columns, shear walls, etc;
c) Loading conditions, preferably shown on a schematic plan indicating combination of design loads transmitted to the foundation;
d) Information relating to geological history of the area, seismicity of their area, hydrological information indicating ground water conditions and its seasonal variations, etc;
e) Geotechnical information giving subsurface profile with stratification details, engineering

properties of the founding strata (namely, index properties, effective shear parameters determined under appropriate drainage conditions, compressibility characteristics, swelling properties, results of field tests like static and dynamic penetration tests, pressure meter tests, etc); and

f) A review of the performance of similar structure, if any, in the locality.

7.4.3 *Choice of Raft Type*

7.4.3.1 For fairly small and uniform column spacing and when the supporting soil is not too compressible a flat concrete slab having uniform thickness throughout (a true mat) is most suitable (*see* Fig. 5A).

7.4.3.2 A slab may be thickened under heavy loaded columns to provide adequate strength for shear and negative moment. Pedestals may also be provided in such cases (*see* Fig. 5B).

7.4.3.3 A slab and beam type of raft is likely to be more economical for large column spacing and unequal column loads particularly when the supporting soil is very compressive (*see* Fig. 5C and Fig. 5D).

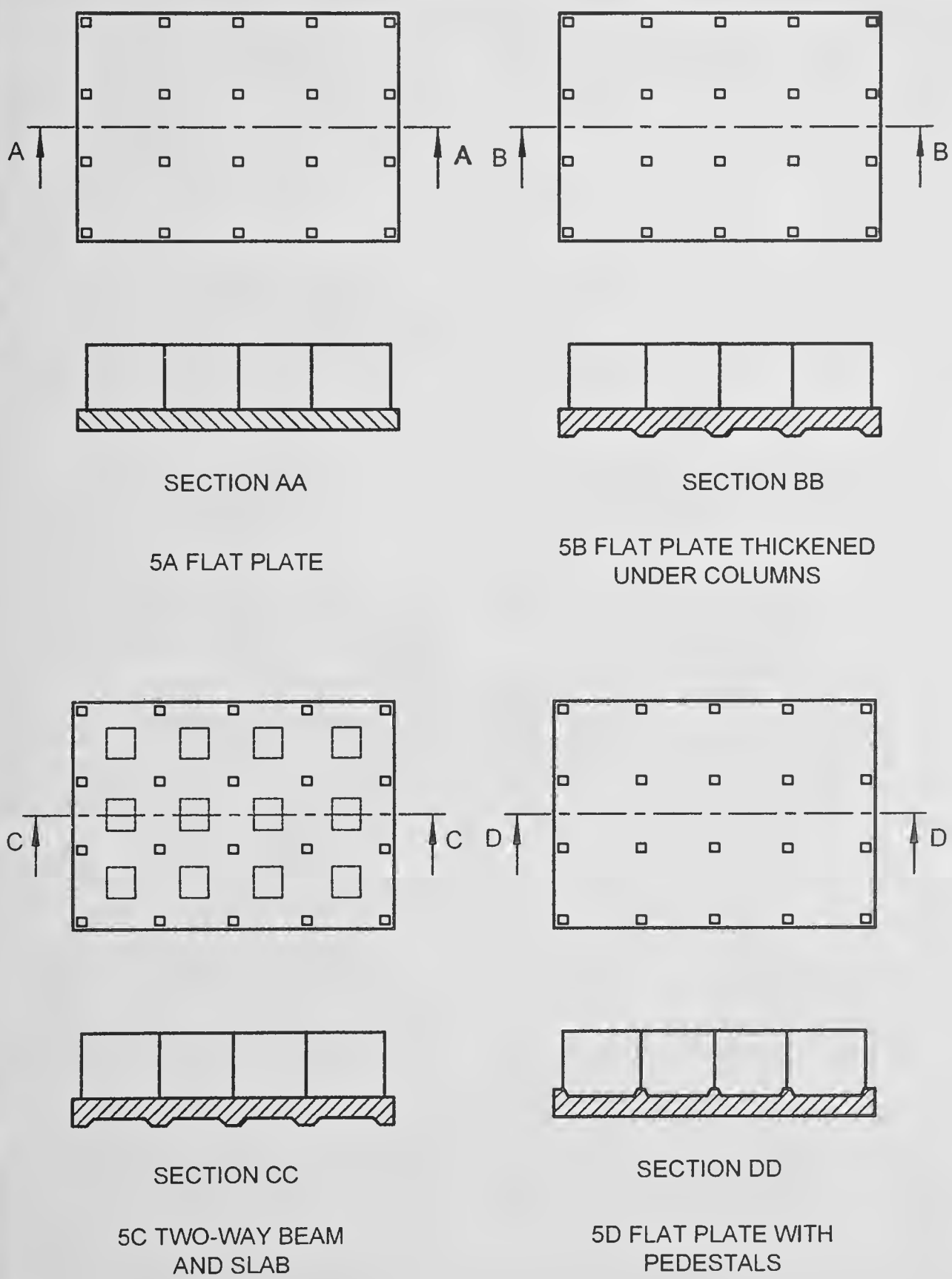

FIG. 5 COMMON TYPES OF RAFT FOUNDATION

7.4.3.4 For very heavy structures, provision of cellular raft or rigid frames consisting of slabs and basement walls may be considered.

7.4.4 *Methods of Analysis*

The essential task in the analysis of a raft foundation is the determination of the distribution of contact pressure underneath the raft which is a complex function of the rigidity of the superstructure, the supporting soil and the raft itself, and cannot be determined with exactitude, except in very simple cases. This necessitates a number of simplifying assumptions to make the problem amenable to analysis. Once the distribution of contact pressure is determined, design bending moments and shears can be computed based on statics. The methods of analysis suggested are distinguished by the assumptions involved. Choice of a particular method should be governed by the validity of the assumptions in the particular case.

7.4.4.1 *Rigid foundation (conventional method)*

This method is based on the assumption of linear distribution of contact pressure. The basic assumptions of this method are,

a) the foundations rigid relative to the supporting soil and the compressible soil layer is relatively shallow; and

b) the contact pressure variation is assumed as planar, such that the centroid of the contact pressure coincides with the line of action of the resultant force of all loads acting on the foundation.

This method may be used when either of the following conditions is satisfied:

1) The structure behaves as rigid (due to the combined action of the superstructure and the foundation) with relative stiffness factor $K>0.5$ (for evaluation of K, *see* Annex C); and

2) The column spacing is less than $1.75/\lambda$ (*see* Annex C).

The raft is analyzed as a whole in each of the two perpendicular directions. The contact pressure distribution is determined by the procedure outlined in Annex D. Further analysis is also based on statics.

In the case of uniform conditions when the variations in adjacent column loads and column spacings do not exceed 20 percent of the higher value, the raft may be divided into perpendicular strips of widths equal to the distance between mid-spans and each strip may be analyzed as an independent beam with known column loads and known contact pressures. Such beams will not normally satisfy statics due to shear transfer between adjacent strips and design may be based on suitable moment coefficients, or by moment distribution.

NOTE — On soft soils, for example, normally consolidated clays, peat, muck, organic silts, etc, the assumptions involved in the conventional method are commonly justified.

7.4.4.2 *Flexible foundations*

a) *Simplified method* — In this method, it is assumed that the subgrade consists of an infinite array of individual elastic springs each of which is not affected by others. The spring constant is equal to the modulus of subgrade reaction (k). The contact pressure at any point under the raft is, therefore, linearly proportional to the settlement at the point. Contact pressure may be determined as given in Annex E. This method may be used when all the following conditions are satisfied:

1) The structure (combined action of superstructure and raft) may be considered as flexible (relative stiffness factor $K< 0.5$, *see* Annex C).

2) Variation in adjacent column load does not exceed 20 percent of the higher value.

b) *General method* — For the general case of a flexible foundation not satisfying the requirements of (a), the method based on closed form solution of elastic plate theory may be used. This method is based on the theory of plates on winkler foundation which takes into account the restraint on deflection of a point provided by continuity of the foundation in orthogonal foundation. The distribution of deflection and contact pressure on the raft due to a column load is determined by the plate theory. Since the effect of a column load on an elastic foundation is damped out rapidly, it is possible to determine the total effect at a point of all column loads within the zone of influence by the method of superimposition. The computation of effect at any point may be restricted to columns of two adjoining bays in all directions. The procedure is outlined in Annex F.

7.5 Ring Foundations

For provisions regarding ring foundations, good practice [6-2(16)] shall be referred to.

7.6 Shell Foundations

For provisions regarding shell foundations, good practice [6-2(17)] shall be referred to.

8 DRIVEN/BORED CAST *IN-SITU* CONCRETE PILES

8.1 General

Piles find application in foundations to transfer loads from a structure to competent subsurface strata having adequate load-bearing capacity. The load transfer mechanism from a pile to the surrounding ground is complicated and is not yet fully understood, although application of piled foundations is in practice over many decades. Broadly, piles transfer axial loads either substantially by friction along its shaft and/or by end bearing. Piles are used where either of the above load transfer mechanism is possible depending upon the subsoil stratification at a particular site. Construction of pile foundations require a careful choice of piling system depending upon the subsoil conditions, the load characteristics of a structure and the limitations of total settlement, differential settlement and any other special requirement of a project.

8.2 Materials and Stresses

8.2.1 *Concrete*

Consistency of concrete to be used shall be consistent with the method of installation of piles. Concrete shall be so designed or chosen as to have a homogeneous mix having a slump/workability consistent with the method of concreting under the given conditions of pile installation.

The slump should be 150 to 180 mm at the time of pouring.

The minimum grade of concrete to be used for bored piling shall be M 25. For sub-aqueous concrete, the requirements specified in Part 6 'Structural Design, Section 5 Concrete, Subsection 5A Plain and Reinforced Concrete' of the Code shall be followed. The minimum cement content shall be 400 kg/m^3. However, with proper mix design and use of proper admixture the cement content may be reduced but in no case the cement content shall be less than 350 kg/m^3 [*see also* Table 5 (and Notes thereunder) of Part 6 'Structural Design, Section 5 Concrete, Subsection 5A Plain and Reinforced Concrete' of the Code].

For the concrete, water and aggregates, specifications laid down in Part 6 'Structural Design, Section 5 Concrete, Subsection 5A Plain and Reinforced Concrete' of the Code shall be followed in general.

The average compressive stress under working load should not exceed 25 percent of the specified works cube strength at 28 days calculated on the total cross-sectional area of the pile. Where the casing of the pile is permanent, of adequate thickness and of suitable shape, the allowable compressive stress may be increased.

8.2.2 *Steel Reinforcement*

Steel reinforcement shall conform to any one of the types of steel specified in Part 6 'Structural Design, Section 5 Concrete, Subsection 5A Plain and Reinforced Concrete' of the Code.

8.3 Design Considerations

8.3.1 *General*

Pile foundations shall be designed in such a way that the load from the structure can be transmitted to the subsurface with adequate factor of safety against shear failure of subsurface and without causing such settlement (differential or total), which may result in structural damage and/or functional distress under permanent/transient loading. The pile shaft should have adequate structural capacity to withstand all loads (vertical, axial or otherwise) and moments which are to be transmitted to the subsoil and shall be designed according to Part 6 'Structural Design, Section 5 Concrete, Subsection 5A Plain and Reinforced Concrete' of the Code.

8.3.2 *Adjacent Structures*

8.3.2.1 When working near existing structures, care shall be taken to avoid damage to such structures. The good practice [6-2(18)] may be used as a guide for studying qualitatively the effect of vibration on persons and structures.

8.3.2.2 In case of deep excavations adjacent to piles, proper shoring or other suitable arrangement shall be made to guard against undesired lateral movement of soil.

8.3.3 *Pile Capacity*

The load carrying capacity of a pile depends on the properties of the soil in which it is embedded. Axial load from a pile is normally transmitted to the soil through skin friction along the shaft and end bearing at its tip. A horizontal load on a vertical pile is transmitted to the subsoil primarily by horizontal subgrade reaction generated in the upper part of the shaft. Lateral load capacity of a single pile depends on the soil reaction developed and the structural capacity of the shaft under bending. It would be essential to investigate the lateral load capacity of the pile using appropriate values of horizontal subgrade modulus of the soil. Alternatively, piles may be installed in rake.

8.3.3.1 The ultimate load capacity of a pile may be estimated by means of static formula on the basis of soil test results, or by using a dynamic pile formula using data obtained during driving the pile. However, dynamic pile driving formula should be generally used as a measure to control the pile driving at site. Pile capacity should preferably be confirmed by initial load

tests {*see* good practice [6-2(19)]}. For rock-socketed piles, reference shall also be made to good practice [6-2(20)] for estimating the load capacity of piles.

The settlement of pile obtained at safe load/working load from load-test results on a single pile shall not be directly used for estimating the settlement of a structure. The settlement may be determined on the basis of subsoil data and loading details of the structure as a whole using the principles of soil mechanics.

8.3.3.1.1 *Static formula*

The ultimate load capacity of a single pile may be obtained by using static analysis, the accuracy being dependent on the reliability of the soil properties for various strata. When computing capacity by static formula, the shear strength parameters obtained from a limited number of borehole data and laboratory tests should be supplemented, wherever possible by *in-situ* shear strength obtained from field tests. The two separate static formulae, commonly applicable for cohesive and non-cohesive soil respectively, are indicated in Annex G. Other formula based on static cone penetration test {*see* the accepted standards [6-2(21)]} and standard penetration test {*see* the accepted standard [6-2(22)]} are given in **G-3** and **G-4**.

8.3.3.1.2 *Dynamic formula*

For driven piles, any established dynamic formula may be used to control the pile driving at site giving due consideration to limitations of various formulae.

Whenever, double acting diesel hammers or hydraulic hammers are used for driving of piles, manufacturer's guidelines about energy and set criteria may be referred to. Dynamic formulae are not directly applicable to cohesive soil deposits such as saturated silts and clays as the resistance to impact of the tip of the casing will be exaggerated by their low permeability while the frictional resistance on the sides is reduced by lubrication.

8.3.3.1.3 *Load test results*

The ultimate load capacity of a single pile is determined with reasonable accuracy from test loading as per good practice [6-2(19)]. The load test on a pile shall not be carried out earlier than four weeks from the time of casting the pile.

8.3.3.2 *Uplift capacity*

The uplift capacity of a pile is given by sum of the frictional resistance and the weight of the pile (buoyant or total as relevant). The recommended factor of safety is 3.0 in the absence of any pullout test results and 2.0 with pullout test results. Uplift capacity can be obtained from static formula (*see* Annex G) by ignoring end bearing but adding weight of the pile (buoyant or total as relevant).

8.3.4 *Negative Skin Friction or Dragdown Force*

When a soil stratum, through which a pile shaft has penetrated into a underlying hard stratum, compresses as a result of either it being unconsolidated or it being under a newly placed fill or as a result of remoulding during driving of the pile, a dragdown force is generated along the pile shaft up to a point in depth where the surrounding soil does not move downward relative to the pile shaft. Existence of such a phenomenon shall be assessed and suitable correction shall be made to the allowable load where appropriate.

8.3.5 *Structural Capacity*

The piles shall have necessary structural strength to transmit the loads imposed on it, ultimately to the soil. In case of uplift, the structural capacity of the pile, that is, under tension should also be considered.

8.3.5.1 *Axial capacity*

Where a pile is wholely embedded in the soil (having an undrained shear strength not less than 0.01 N/mm^2), its axial load carrying capacity is not necessarily limited by its strength as a long column. Where piles are installed through very weak soils (having an undrained shear strength less than 0.01 N/mm^2), special considerations shall be made to determine whether the shaft would behave as a long column or not. If necessary, suitable reductions shall be made for its structural strength following the normal structural principles covering the buckling phenomenon.

When the finished pile projects above ground level and is not secured against buckling by adequate bracing, the effective length will be governed by the fixity imposed on it by the structure it supports and by the nature of the soil into which it is installed. The depth below the ground surface to the lower point of contraflexure varies with the type of the soil. In good soil the lower point of contraflexure may be taken at a depth of 1 m below ground surface subject to a minimum of 3 times the diameter of the shaft. In weak soil (undrained shear strength less than 0.01 N/mm^2) such as soft clay or soft silt, this point may be taken at about half the depth of penetration into such stratum but not more than 3 m or 10 times the diameter of the shaft, whichever is more. The degree of fixity of the position and inclination of the pile top and the restraint provided by any bracing shall be estimated following accepted structural principles.

The permissible stress shall be reduced in accordance with similar provision for reinforced concrete columns as laid down in Part 6 'Structural Design, Section 5 Concrete, Subsection 5A Plain and Reinforced Concrete' of the Code.

8.3.5.2 *Lateral load capacity*

A pile may be subjected to lateral force for a number of causes, such as wind, earthquake, water current, earth pressure, effect of moving vehicles or ships, plant and equipment, etc. The lateral load capacity of a single pile depends not only on the horizontal subgrade modulus of the surrounding soil but also on the structural strength of the pile shaft against bending, consequent upon application of a lateral load. While considering lateral load on piles, effect of other co-existent loads, including the axial load on the pile, should be taken into consideration for checking the structural capacity of the shaft. A recommended method for the pile analysis under lateral load in given in Annex H.

Because of limited information on horizontal subgrade modulus of soil and pending refinements in the theoretical analysis, it is suggested that the adequacy of a design should be checked by an actual field load test. In the zone of soil susceptible to liquefaction, the lateral resistance of the soil shall not be considered.

8.3.5.2.1 *Fixed and free head conditions*

A group of three or more pile connected by a rigid pile cap shall be considered to have fixed head condition. Caps for single piles shall be interconnected by grade beams in two directions and for twin piles by grade beams in a line transverse to the common axis of the pair so that the pile head is fixed. In all other conditions the pile shall be taken as free headed.

8.3.5.3 *Raker piles*

Raker piles are normally provided where vertical piles cannot resist the applied horizontal forces. Generally the rake will be limited to 1 horizontal to 6 vertical. In the preliminary design, the load on a raker pile is generally considered to be axial. The distribution of load between raker and vertical piles in a group may be determined by graphical or analytical methods. Where necessary, due consideration should be made for secondary bending induced as a result of the pile cap movement, particularly when the cap is rigid. Free-standing raker piles are subjected to bending moments due to their own weight or external forces from other causes. Raker piles, embedded in fill or consolidating deposits, may become laterally loaded owing to the settlement of the surrounding soil. In consolidating clay, special precautions, like provision of permanent casing should be taken for raker piles.

8.3.6 *Spacing of Piles*

The minimum centre-to-centre spacing of pile is considered from three aspects, namely,

a) practical aspects of installing the piles;
b) diameter of the pile; and
c) nature of the load transfer to the soil and possible reduction in the load capacity of piles group.

NOTE — In the case of piles of non-circular cross-section, diameter of the circumscribing circle shall be adopted.

8.3.6.1 In case of piles founded on hard stratum and deriving their capacity mainly from end bearing the minimum spacing shall be 2.5 times the diameter of the circumscribing circle corresponding to the cross-section of the pile shaft. In case of piles resting on rock, the spacing of two times the said diameter may be adopted.

8.3.6.2 Piles deriving their load carrying capacity mainly from friction shall be spaced sufficiently apart to ensure that the zones of soils from which the piles derive their support do not overlap to such an extent that their bearing values are reduced. Generally the spacing in such cases shall not be less than 3 times the diameter of the pile shaft.

8.3.7 *Pile Groups*

8.3.7.1 In order to determine the load carrying capacity of a group of piles a number of efficiency equations are in use. However, it is difficult to establish the accuracy of these efficiency equations as the behaviour of pile group is dependent on many complex factors. It is desirable to consider each case separately on its own merits.

8.3.7.2 The load carrying capacity of a pile group may be equal to or less than the load carrying capacity of individual piles multiplied by the number of piles in the group. The former holds true in case of friction piles, driven into progressively stiffer materials or in end-bearing piles. For driven piles in loose sandy soils, the group capacity may even be higher due to the effect of compaction. In such cases a load test may be carried out on a pile in the group after all the piles in the group have been installed.

8.3.7.3 In case of piles deriving their support mainly from friction and connected by a rigid pile cap, the group may be visualized as a block with the piles embedded within the soil. The ultimate load capacity of the group may then be obtained by taking into account the frictional capacity along the perimeter of the block and end bearing at the bottom of the block using the accepted principles of soil mechanics.

8.3.7.3.1 When the cap of the pile group is cast directly on reasonably firm stratum which supports the piles, it may contribute to the load carrying capacity of the group. This additional capacity along with the individual capacity of the piles multiplied by the number of piles in the group shall not be more than the capacity worked out as per **8.3.7.3**.

8.3.7.4 When a pile group is subjected to moment either from superstructure or as a consequence of inaccuracies of installation, the adequacy of the pile group in resisting the applied moment should be checked. In case of a single pile subjected to moment due to lateral loads or eccentric loading, beams may be provided to restrain the pile cap effectively from lateral or rotational movement.

8.3.7.5 In case of a structure supported on single piles/ group of piles resulting in large variation in the number of piles from column to column it may result in excessive differential settlement. Such differential settlement should be either catered for in the structural design or it may be suitably reduced by judicious choice of variations in the actual pile loading. For example, a single pile cap may be loaded to a level higher than that of the pile in a group in order to achieve reduced differential settlement between two adjacent pile caps supported on different number of piles.

8.3.8 *Factor of Safety*

8.3.8.1 Factor of safety should be chosen after considering,

a) the reliability of the calculated value of ultimate load capacity of a pile;
b) the types of superstructure and the type of loading; and
c) allowable total/differential settlement of the structure.

8.3.8.2 When the ultimate load capacity is determined from either static formula or dynamic formula, the factor of safety would depend on the reliability of the formula and the reliability of the subsoil parameters used in the computation. The minimum factor of safety on static formula shall be 2.5. The final selection of a factor of safety shall take into consideration the load settlement characteristics of the structure as a whole at a given site.

8.3.8.3 Higher value of factor of safety for determining the safe load on piles may be adopted, where,

a) settlement is to be limited or unequal settlement avoided;
b) large impact or vibrating loads are expected; and
c) the properties of the soil may deteriorate with time.

8.3.9 *Transient Loading*

The maximum permissible increase over the safe load of a pile, as arising out of wind loading, is 25 percent. In case of loads and moments arising out of earthquake effects, the increase of safe load shall be as given in **7.2.2.4.2**. For transient loading arising out of superimposed loads, no increase is allowed.

8.3.10 *Overloading*

When a pile in a group, designed for a certain safe load is found, during or after execution, to fall just short of the load required to be carried by it, an overload up to 10 percent of the pile capacity may be allowed on each pile. The total overloading on the group should not, however, be more than 10 percent of the capacity of the group subject to the increase of the load on any pile being not more than 25 percent of the allowable load on a single pile.

8.3.11 *Reinforcement*

8.3.11.1 The design of the reinforcing cage varies depending upon the driving and installation conditions, the nature of the subsoil and the nature of load to be transmitted by the shaft - axial, or otherwise. The minimum area of longitudinal reinforcement of any type or grade within the pile shaft shall be 0.4 percent of the cross-sectional area of the pile shaft. The minimum reinforcement shall be provided throughout the length of the shaft.

8.3.11.2 The curtailment of reinforcement along the depth of the pile, in general, depends on the type of loading and subsoil strata. In case of piles subjected to compressive load only, the designed quantity of reinforcement may be curtailed at appropriate level according to the design requirements. For piles subjected to uplift load, lateral load and moments, separately or with compressive loads, it would be necessary to provide reinforcement for the full depth of pile. In soft clays or loose sands, or where there may be danger to green concrete due to driving of adjacent piles, the reinforcement should be provided to the full pile depth, regardless of whether or not it is required from uplift and lateral load considerations. However, in all cases, the minimum reinforcement specified in **8.3.11.1** shall be provided throughout the length of the shaft.

8.3.11.3 Piles shall always be reinforced with a minimum amount of reinforcement as dowels keeping the minimum bond length into the pile shaft below its cut-off level and with adequate projection into the pile cap, irrespective of design requirements.

8.3.11.4 Clear cover to all main reinforcement in pile shaft shall be not less than 50 mm. The laterals of a reinforcing cage may be in the form of links or spirals. The diameter and spacing of the same is chosen to impart adequate rigidity of the reinforcing cage during its handing and installations. The minimum diameter of the links or spirals shall be 8 mm and the spacing of the links or spirals shall be not less than 150 mm. Stiffner rings preferably of 16 mm diameter at every 1.5 m centre-to-centre should be provided along the length of the cage for providing rigidity to reinforcement cage. Minimum 6 numbers of vertical bars shall be used for a

circular pile and minimum diameter of vertical bar shall be 12 mm. The clear horizontal spacing between the adjacent vertical bars shall be four times the maximum aggregate size in concrete. If required, the bars can be bundled to maintain such spacing.

8.3.12 *Design of Pile Cap*

8.3.12.1 The pile caps may be designed by assuming that the load from column is dispersed at 45° from the top of the cap to the mid-depth of the pile cap from the base of the column or pedestal. The reaction from piles may also be taken to be distributed at 45° from the edge of the pile, up to the mid-depth of the pile cap. On this basis the maximum bending moment and shear forces should be worked out at critical sections. The method of analysis and allowable stresses should be in accordance with Part 6 'Structural Design, Section 5 Concrete, Subsection 5A Plain and Reinforced Concrete' of the Code.

8.3.12.2 Pile cap shall be deep enough to allow for necessary anchorage of the column and pile reinforcement.

8.3.12.3 The pile cap should be rigid enough so that the imposed load could be distributed on the piles in a group equitably.

8.3.12.4 In case of a large cap, where differential settlement may occur between piles under the same cap, due consideration for the consequential moment should be given.

8.3.12.5 The clear overhang of the pile cap beyond the outermost pile in the group shall be a minimum of 150 mm.

8.3.12.6 The cap is generally cast over a 75 mm thick levelling course of concrete. The clear cover for main reinforcement in the cap slab shall not be less than 60 mm.

8.3.12.7 The embedment of pile into cap should be 75 mm.

8.3.13 *Grade Beams*

8.3.13.1 The grade beams supporting the walls shall be designed taking due account of arching effect due to masonry above the beam. The beam with masonry due to composite action behaves as a deep beam.

For the design of beams, a maximum bending moment of $\frac{wl^2}{50}$, where w is uniformly distributed load per metre run (worked out by considering a maximum height of two storeys in structures with load bearing walls and one storey in framed structures) and l is the effective span, in metres, shall be taken, if the beams are supported during construction till the masonry above it gains strength. The value of bending moment shall be increased to $\frac{wl^2}{30}$, if the beams are not supported. For considering composite action, the minimum height of wall shall be 0.6 times the beam span. The brick strength should not be less than 3 N/mm^2. For concentrated and other loads which come directly over the beam, full bending moment should be considered.

8.3.13.2 The minimum overall depth of grade beams shall be 150 mm. The reinforcement at the bottom should be kept continuous and an equal amount may be provided at top to a distance of a quarter span both ways from pile centres. The longitudinal reinforcement both at top and bottom should not be less than three bars of 10 mm diameter mild steel (or equivalent deformed steel) and stirrups of 6 mm diameter bars should be spaced at a minimum of 300 mm spacing.

8.3.13.3 In expansive soils, the grade beams shall be kept a minimum of 80 mm clear off the ground. In other soils, beams may rest on ground over a leveling concrete course of about 80 mm (*see* Fig. 6).

8.3.13.4 In the case of exterior beams over piles in expansive soils, a ledge projection of 75 mm thickness and extending 80 mm into ground (*see* Fig. 6) shall be provided on the outer side of the beam.

8.4 For detailed information on driven/bored cast *in-situ* concrete piles regarding control of piling, installation, defective pile and recording of data, reference shall be made to good practice [6-2(23)].

8.5 Bored Cast *In-Situ* Concrete Piles on Rocks

Design and construction of bored cast *in-situ* piles founded on rocks shall be carried out in accordance with good practice [6-2(20)].

8.6 Non-Destructive Testing

For quality assurance of concrete piles, non-destructive integrity test may be carried out prior to laying of beam/caps, in accordance with good practice [6-2(24)].

9 DRIVEN PRECAST CONCRETE PILES

9.1 Provisions of **8** except **8.3.11** shall generally apply.

9.2 Design of Pile Section

9.2.1 Design of pile section shall be such as to ensure the strength and soundness of the pile against lifting from the casting bed, transporting, handling and driving stresses without damage.

9.2.2 Any shape having radial symmetry will be satisfactory for precast piles. The most commonly used cross-sections are square and octagonal.

9.2.3 Where exceptionally long lengths of piles are required, hollow sections may be used. If the final condition requires larger cross-sectional area, the

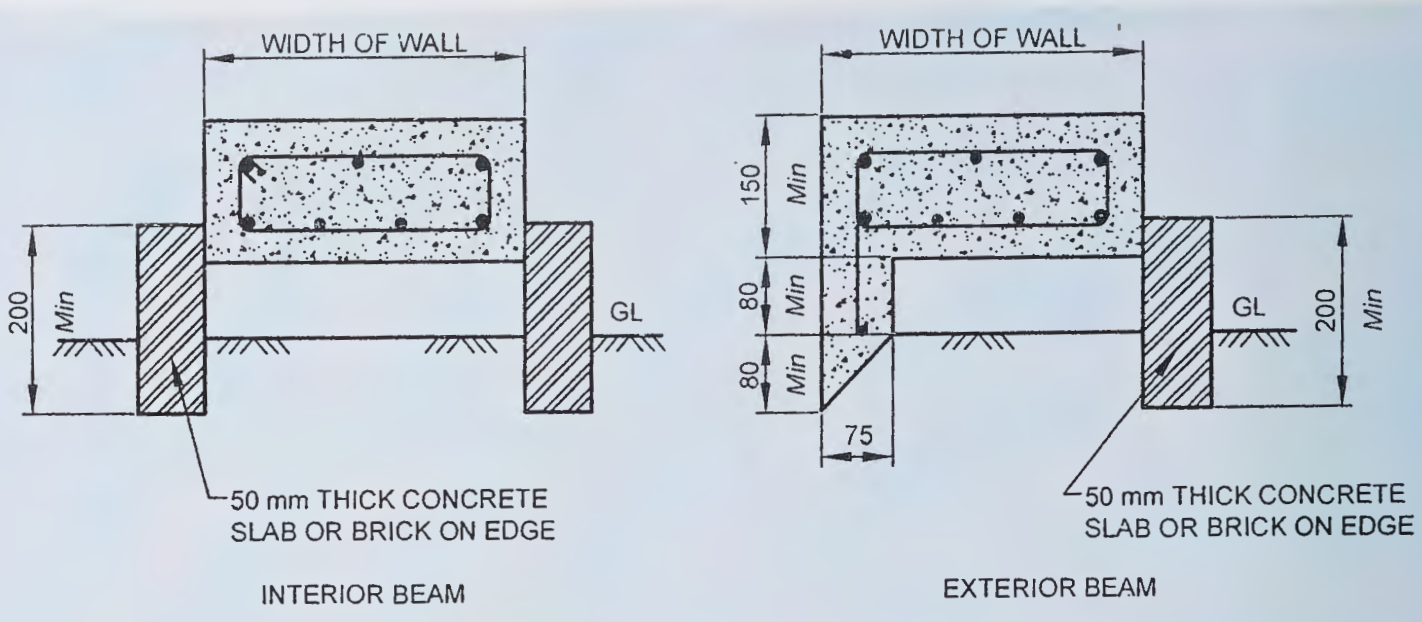

6A BEAMS IN EXPANSIVE SOILS

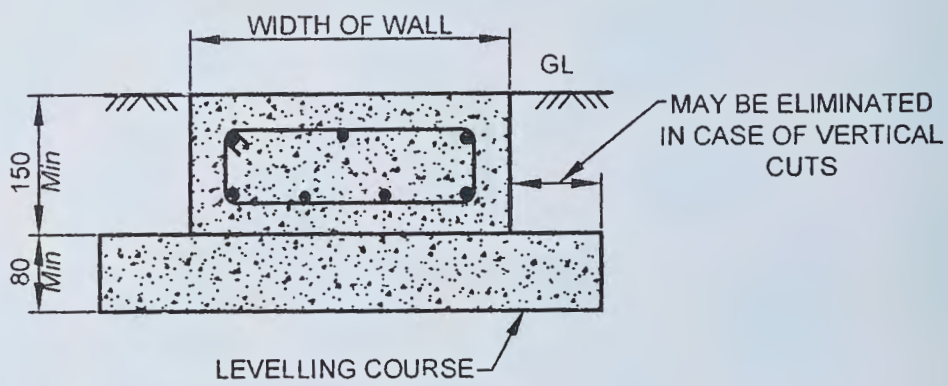

6B BEAMS IN NON-EXPANSIVE SOILS

All dimensions in millimetres.

FIG. 6 TYPICAL SECTIONS OF GRADE BEAMS

hollow sections may be filled with concrete after driving in position.

9.2.4 Wherever, final pile length is so large that a single length precast pile unit is either uneconomical or impracticable for installation, the segmental precast RCC piles with a number of segments using efficient mechanical jointing could be adopted.

Excessive whipping during handling precast pile may generally be avoided by limiting the length of pile to a maximum of 50 times the least width. As an alternative, segmental precast piling technique could be used.

The design of joints shall take care of corrosion by providing additional sacrificial thickness for the joint, wherever warranted.

9.2.5 Stresses induced by bending in the cross-section of precast pile during lifting and handling may be estimated as for any reinforced concrete section in accordance with relevant provisions of Part 6 'Structural Design, Section 5 Concrete, Subsection 5A Plain and Reinforced Concrete' of the Code. The calculations for bending moment for different support conditions during handling are given in Table 5.

Table 5 Bending Moment for Different Support Conditions
(*Clause* 9.2.5)

Sl No.	Number of Points of Pick Up	Location of Support from End in Terms of Length of Pile for Minimum Moments	Bending Moment to be Allowed for Design kN.m
(1)	(2)	(3)	(4)
i)	One	0.293 *L*	4.3 *WL*
ii)	Two	0.207 *L*	2.2 *WL*
iii)	Three	0.145 *L*, the middle point will be at the centre	1.05 *WL*

NOTE — *W* = weight of pile, in kN.
L = length of pile, in m.

9.2.6 The driving stresses on a pile may be estimated

by the following formula:

$$\frac{\text{Driving resistance}}{\text{Cross-sectional area of the pile}} \times \left[\frac{2}{\sqrt{n}} - 1\right]$$

where

n = efficiency of the blow (*see* **9.2.6.1** for probable value of n).

NOTE — For the purpose of this formula, cross-sectional area of the pile shall be calculated as the overall sectional area of the pile including the equivalent area for reinforcement.

9.2.6.1 The formula for efficiency of the blow, representing the ratio of energy after impact to striking energy of ram, n, is:

a) where W is greater than $P.e$ and the pile is driven into penetrable ground,

$$n = \frac{W + (P \cdot e^2)}{W + P}$$

b) where W is less than $P.e$ and the pile is driven into penetrable ground,

$$n = \left[\frac{W + (P \cdot e^2)}{W + P}\right] - \left[\frac{W - (P \cdot e)}{W + P}\right]^2$$

The following are the values of n in relation to e and to the ratio of P/W:

Sl No.	*Ratio of P/W*	*e = 0.5*	*e = 0.4*	*e = 0.32*	*e = 0.25*	*e = 0*
(1)	(2)	(3)	(4)	(5)	(6)	(7)
i)	½	0.75	0.72	0.70	0.69	0.67
ii)	1	0.63	0.58	0.55	0.53	0.50
iii)	1½	0.55	0.50	0.47	0.44	0.40
iv)	2	0.50	0.44	0.40	0.37	0.33
v)	2½	0.45	0.40	0.36	0.33	0.28
vi)	3	0.42	0.36	0.33	0.30	0.25
vii)	3½	0.39	0.33	0.30	0.27	0.22
viii)	4	0.36	0.31	0.28	0.25	0.20
ix)	5	0.31	0.27	0.24	0.21	0.16
x)	6	0.27	0.24	0.21	0.19	0.14
xi)	7	0.24	0.21	0.19	0.17	0.12
xii)	8	0.22	0.20	0.17	0.15	0.11

NOTES

1 W = mass of the ram, in tonne and P = weight of the pile, anvil, helmet, and follower (if any), in tonne.

2 Where the pile finds refusal in rock, $0.5P$ should be substituted for P in the above expressions for n.

3 e is the coefficient of restitution of the materials under impact as tabulated below:

a) For steel ram of double-acting hammer striking on steel anvil and driving reinforced concrete pile, e = 0.5.

b) For cast-iron ram of single-acting or drop hammer striking on head of reinforced concrete pile, e = 0.4.

c) Single-acting or drop hammer striking a well-conditioned driving cap and helmet with hard wood dolly in driving reinforced concrete piles or directly on head of timber pile, e = 0.25.

d) For a deteriorated condition of the head of pile or of dolly, e = 0.

9.3 Reinforcement

9.3.1 The longitudinal reinforcement of any type or grade shall be provided in precast reinforced concrete piles for the entire length. All the main longitudinal bars shall be of the same length and should fit tightly into the pile shoe, if there is one. Shorter rods to resist local bending moments may be added but the same should be carefully detailed to avoid any sudden discontinuity of the steel which may lead to cracks during heavy driving.. The area of main longitudinal reinforcement shall not be less than the following percentages of the cross-sectional area of the piles:

a) For piles with a length less than 30 times the least width: 1.25 percent,

b) For piles with a length 30 to 40 times the least width: 1.5 percent, and

c) For piles with a length greater than 40 times the least width: 1.5 percent.

9.3.2 Piles shall always be reinforced with a minimum amount of reinforcement as dowels keeping the minimum bond length into the pile shaft below its cut-off level and with adequate projection into the pile cap, irrespective of design requirements.

9.3.3 Clear cover to all main reinforcement in pile shaft shall be not less than 50 mm. The laterals of a reinforcing cage may be in the form of links or spirals. The diameter and spacing of the same is chosen to impart adequate rigidity of the reinforcing cage during its handing and installations. The minimum diameter of the links or spirals shall be 8 mm and the spacing of the links or spirals shall be not less than 150 mm. Stiffner rings preferably of 16 mm diameter at every 1.5 m centre-to-centre to be provided along the length of the cage for providing rigidity to reinforcement cage. Minimum 6 numbers of vertical bars shall be used for a circular pile and minimum diameter of vertical bar shall be 12 mm. The clear horizontal spacing between the adjacent vertical bars shall be four times the maximum aggregate size in concrete. If required, the bars may be bundled to maintain such spacing.

9.4 Additional provision for prestressed concrete piles shall be as per good practice [6-2(25)].

9.5 For detailed information regarding casting and curing, storing and handling, control of pile driving and recording of data, reference shall be made to good practice [6-2(25)].

9.6 Non-Destructive Testing

For quality assurance of concrete piles, non-destructive integrity test may be carried out prior to laying of beam/caps, in accordance with good practice [6-2(24)].

10 PRECAST CONCRETE PILES IN PREBORED HOLES

10.1 Provisions of 9 except 9.3 shall generally apply.

10.2 Handling Equipment for Lowering and Grouting Plant

Handling equipment such as crane, scotch derricks. movable gantry may be used for handling and lowering the precast piles in the bore. The choice of equipment will depend upon length, mass and other practical requirements.

The mixing of the grout shall be carried out in any suitable high speed colloidal mixer. Normally the colloidal mixer is adequate to fill the annular space with grouts. Where this is not possible, a suitable grout pump shall be used.

10.3 Reinforcement

10.3.1 The design of the reinforcing cage varies depending upon the handling and installation conditions, the nature of the subsoil and the nature of load to be transmitted by the shaft - axial, or otherwise. The minimum area of longitudinal reinforcement of any type or grade within the pile shaft shall be 0.4 percent of the cross-sectional area of the pile shaft or as required to cater for handling stresses (*see* **9.2.5**), whichever is greater. The minimum reinforcement shall be provided throughout the length of the shaft.

10.3.2 Piles shall always be reinforced with a minimum amount of reinforcement as dowels keeping the minimum bond length into the pile shaft below its cut-off level and with adequate projection into the pile cap, irrespective of design requirements.

10.3.3 Clear cover to all main reinforcement in pile shaft shall be not less than 50 mm. The laterals of a reinforcing cage may be in the form of links or spirals. The diameter and spacing of the same is chosen to impart adequate rigidity of the reinforcing cage during its handing and installations. The minimum diameter of the links or spirals shall be 8 mm and the spacing of the links or spirals shall be not less than 150 mm. Stiffner rings preferably of 16 mm diameter at every 1.5 m centre-to-centre to be provided along length of the cage for providing rigidity to reinforcement cage. Minimum 6 numbers of vertical bars shall be used for a circular pile and minimum diameter of vertical bar shall be 12 mm. The clear horizontal spacing between the adjacent vertical bars shall be four times the maximum aggregate size in concrete. If required, the bars may be bundled to maintain such spacing.

10.3.4 A thin gauge sheathing pipe of approximately 40 mm diameter may be attached to the reinforcement cage, in case of solid piles, to form the central duct for pumping grout to the bottom of the bore. The bottom end of the pile shall have proper arrangements for flushing/cleaning for grouting. Air lift technique may be used for cleaning the borehole, however this technique should be used carefully in case of silty and sandy soil.

10.4 For detailed information regarding casting and curing, storing and handling, control of pile installation and recording of data, reference shall be made to good practice [6-2(26)].

10.5 Non-Destructive Testing

For quality assurance of concrete piles, non-destructive integrity test may be carried out prior to laying of beam/caps, in accordance with good practice [6-2(24)].

11 UNDER-REAMED PILES

11.1 General

Under-reamed piles are bored cast *in-situ* and bored compaction concrete types having one or more bulbs formed by enlarging the borehole for the pile stem. These piles are suited for expansive soils which are often subjected to considerable ground movements due to seasonal moisture variations. These also find wide application in other soil strata where economics are favorable. When the ground consists of expansive soil, for example, black cotton soils, the bulb of under-reamed pile provide anchorage against uplift due to swelling pressure, apart from the increased bearing, provided topmost bulb is formed close to or just below the bottom of active zone. Negative slopes may not be stable in certain strata conditions, for example, in pure sands (clean sands with fines less than 5 percent) and very soft clayey strata having N of SPT less than 2 (undrained shear strength of less than 12.5 kN/m^2). Hence formation of bulb(s) in such strata is not advisable. In subsoil strata above water table, the maximum number of bulbs in under-reamed pile should be restricted to four. In the strata such as clay, silty clay and clayey silt with high water table where sides of borehole stand by itself without needing any stabilization by using drilling mud or otherwise, the maximum number of bulbs in under-reamed piles should be restricted to two. In strata for example, clayey sand, silty sand and sandy silt with high water table where borehole needs stabilization by using drilling mud, under-reamed piles with more than one bulb shall not be used. In loose to medium pervious strata such as clayey sand, silty sand and sandy silt strata, compaction under-reamed piles may be used as the process of compaction increases the load carrying capacity of piles. From practical considerations, under-reamed piles of more than 10 m depth shall not be used without ensuring their construction feasibility and load carrying capacity by initial load tests in advance. In view of additional anchorage available with the provision of bulbs, under-reamed piles can be used with advantage to resist uplift loads.

11.2 Materials

Provisions of **8.2** shall generally apply.

11.3 Design Considerations

11.3.1 *General*

Under-reamed pile foundation shall be designed in such a way that the load from the structure they support can be transmitted to the soil without causing failure of soil or failure of pile material and without causing settlement (differential or total) under permanent transient loading as may result in structural damage and/or functional distress (*see* Fig. 7).

11.3.1.1 In deep deposits of expansive soils the minimum length of piles, irrespective of any other considerations, shall be 3.5 m below ground level. If the expansive soil deposits are of shallow depth and overlying on non-expansive soil strata of good bearing or rock, piles of smaller length can also be provided. In recently filled up grounds or other strata or poor bearing the piles should pass through them and rest in good bearing strata.

11.3.1.2 The minimum stem diameter of under-reamed pile can be 200 mm up to 5 m depth in dry conditions, that is, strata with low water table. The minimum stem diameter for piles up to 5 m depth in strata with high water table within pile depth, shall be 300 mm for normal under-reamed pile and 250 mm for compaction under-reamed pile. For piles of more than 5 m depth, the minimum diameter in two cases shall be 375 mm and 300 mm, respectively. The minimum diameter of stem for strata consisting of harmful constituents, such as sulphates, should also be 375 mm.

11.3.1.3 The diameter of under-reamed bulbs may vary from 2 to 3 times the stem diameter, depending, upon the feasibility of construction and design requirements. In bored cast *in-situ* under-reamed piles and under-reamed compaction piles, the bulb diameter shall be normally 2.5 and 2 times the stem diameter, respectively.

11.3.1.4 For piles of up to 300 mm diameter, the spacing of the bulbs should not exceed 1.5 times the diameter of the bulb. For piles of diameter greater than 300 mm, spacing can be reduced to 1.25 times the bulb diameter.

11.3.1.5 The topmost bulb should be at a minimum depth of two times the bulb diameter. In expansive soils it should also be not less than 2.75 m below ground level. The minimum clearance below the underside of pile cap embedded in the ground and the bulb should be a minimum of 1.5 times the bulb diameter.

11.3.1.6 Under-reamed piles with more than one bulb

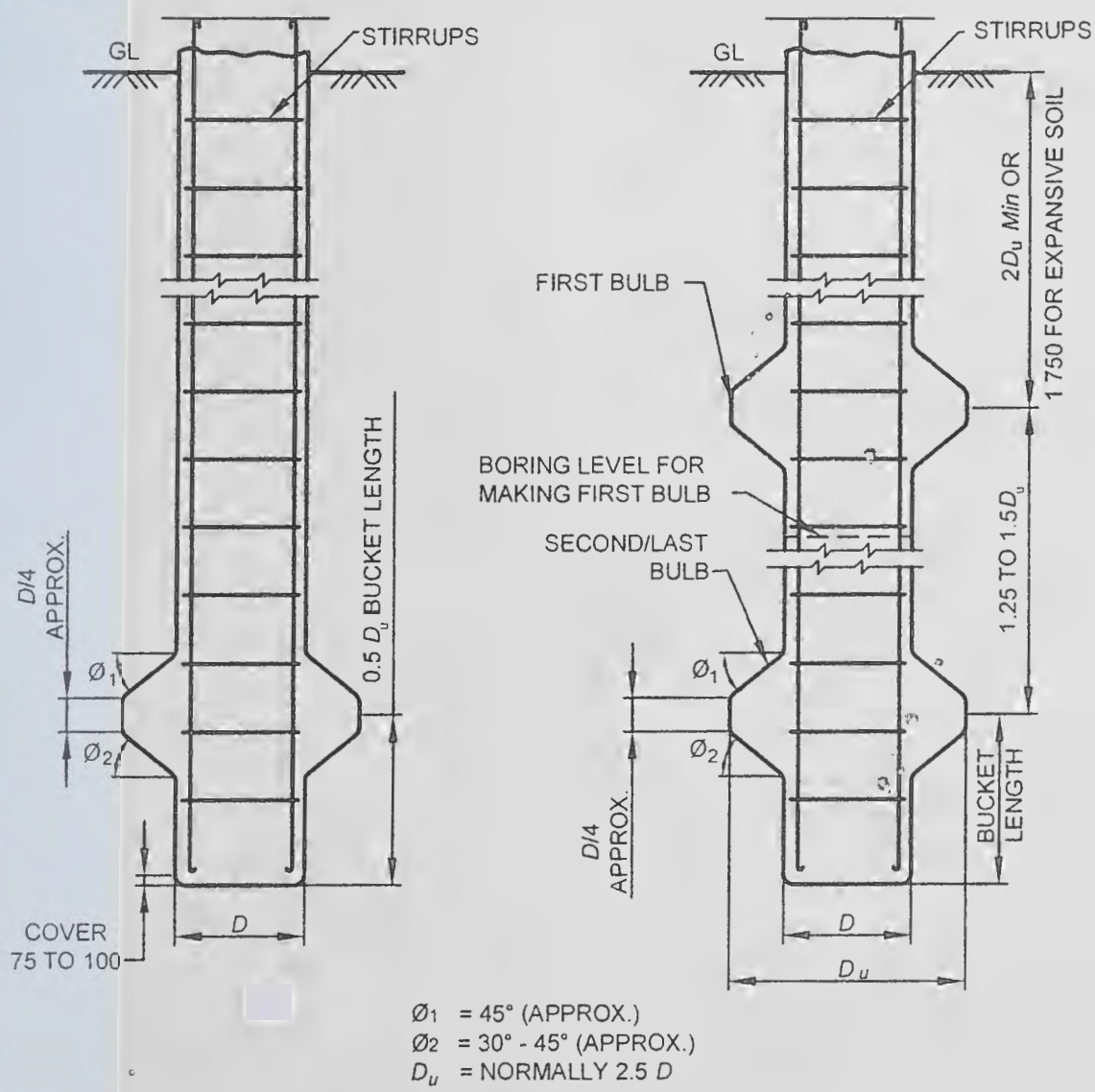

7A SECTION OF SINGLE - UNDER-REAMED PILE

7B SECTION OF MULTI-UNDER-REAMED PILE

All dimensions in millimetres.

FIG. 7 TYPICAL DETAILS OF BORED CAST *IN-SITU* UNDER-REAMED PILE FOUNDATION

are not advisable without ensuring their feasibility in strata needing stabilization of boreholes by drilling mud. The number of bulbs in the case of bored compaction piles should also not exceed one in such strata.

11.3.1.7 Under-reamed batter piles without lining in dry conditions, that is, strata with low water table can be constructed with batter not exceeding 15°.

11.3.2 *Safe Load*

Safe load on a pile can be determined,

a) by calculating the ultimate load from soil properties and applying a suitable factor of safety as given in Annex J;
b) by load test on pile as good practice [6-2(19)]; and
c) from safe load tables.

11.3.2.1 *Load test*

Provisions of **8.3.3.1.3** shall generally apply.

11.3.2.2 In the absence of detailed subsoil investigations and pile load tests for minor and less important structures, a rough estimate of safe load on piles may be made from the safe load table given in the good practice [6-2(27)].

NOTE — Safe loads as given in the above referred Table are symptomatic. Safe load carrying capacity of pile shall be worked out for the actual geotechnical data using **5.2.3.1** of good practice [6-2(27)], subjected to confirmation by initial pile load test in accordance with good practice [6-2(19)] and other provisions in **5.2.3.2** of good practice [6-2(27)].

11.3.3 *Negative Skin Friction or Dragdown Force*

Provisions of **8.3.4** shall generally apply subject to the condition that the under-reamed bulb is provided below the strata susceptible to negative skin friction.

11.3.4 *Structural Capacity*

Provisions of **8.3.5** shall generally apply except that the under-reamed pile stem is designed for axial capacity as a short column. Under-reamed piles under lateral loads and moments tend to behave more as rigid piles due the presence of bulbs and therefore the analysis can be done on rigid pile basis. Nominally reinforced long single bulb piles which are not rigid may be analyzed as per the method given in Annex G or as per other accepted methods.

11.3.5 *Spacing*

Generally the centre-to-centre spacing for bored cast *in-situ* under-reamed piles in a group should be two times the bulb diameter ($2D_u$). It shall not be less than $1.5D_u$. For under-grade beams, the maximum spacing of piles should generally not exceed 3 m. In under-reamed compaction piles, generally the spacing should not be less than $1.5D_u$. If the adjacent piles are of different diameter, an average value of bulb diameter should be taken for spacing.

11.3.6 *Group Efficiency*

For bored cast *in-situ* under-reamed piles at a usual spacing of $2D_u$, the group efficiency will be equal to the safe load of an individual pile multiplied by the number of piles in the group. For piles at a spacing of $1.5D_u$, the safe load assigned per pile in a group should be reduced by 10 percent.

In under-reamed compaction piles, at the usual spacing of $1.5D_u$, the group capacity will be equal to the safe load on an individual pile multiplied by the number of piles in the group.

11.3.7 *Transient and Overloading*

Provisions of **8.3.9** and **8.3.10** shall generally apply.

11.3.8 *Reinforcement*

11.3.8.1 The minimum area of longitudinal reinforcement (any type or grade) within the pile shaft shall be 0.4 percent of the sectional area calculate on the basis of outside area of the shaft or casing if used. Reinforcement is to be provided in full length and further a minimum of 3 bars of 10 mm diameter mild steel or three 8 mm diameter high strength steel bars shall be provided. Transverse reinforcement shall not be less than 6 mm diameter at a spacing of not more than the stem diameter or 300 mm, whichever is less.

In under-reamed compaction piles, a minimum number of four 12 mm diameter bars shall be provided. For piles of lengths exceeding 5 m and of 375 mm diameter, a minimum number of six 12 mm diameter bars shall be provided. For piles exceeding 400 mm diameter, a minimum number of six 12 mm diameter bars shall be provided. The circular stirrups for piles of lengths exceeding 5 m and diameter exceeding 375 mm shall be minimum 8 mm diameter bars.

For piles in earthquake prone areas, a minimum number of six bars of 10 mm diameter shall be provided. Also transverse reinforcement in the form of stirrups or helical should be at 150 mm centre-to-centre in top few meter depth.

11.3.8.2 The minimum clear cover over the longitudinal reinforcement shall be 40 mm. In aggressive environment of sulphates, etc, it may be increased to 75 mm.

11.3.9 The design of pile cap and grade beams shall conform to the requirements specified in **8.3.12** and **8.3.13** respectively.

11.4 For detailed information on under-reamed piles regarding control of pile, installation, reference shall be made to good practice [6-2(26)].

11.5 Non-Destructive Testing

For quality assurance of concrete piles, non-destructive integrity test may be carried out prior to laying of beam/caps, in accordance with good practice [6-2(24)].

12 TIMBER PILES

12.1 General

Timber piles find extensive use for compaction of soils and also for supporting as well as protecting water-front structures. The choice for using a timber pile shall be mainly governed by the site conditions, particularly the water-table conditions. Use of treated or untreated piles will depend upon the site conditions and upon whether the work is permanent or of temporary nature. The timber pile installed shall have its entire length embedded under water so that the pile may not get deteriorated. They have the advantages of being comparatively light for their strength and are easily handled. However, they will not withstand as hard driving as steel or concrete piles. Timber has to be selected carefully and treated where necessary for use as piles, as the durability and performance would considerably depend upon the quality of the material and relative freedom from natural defects. In coastal areas such as Kochi, Coconut/Palmyra tree trunks have been used as timber piles.

12.2 Materials

12.2.1 *Timber*

The timber shall have the following characteristics:

a) Only structural timber shall be used for piles (*see* Part 6 'Structural Design, Section 3 Timber and Bamboo, 3A Timber' of the Code);

b) The length of an individual pile shall be,

   1) the specified length ± 300 mm for piles up to and including 12 m in length, and

   2) the specified length ± 600 mm for piles above 12 m in length.

c) The ratio of heartwood diameter to the pile butt diameter shall be not less than 0.8; and

d) Piles to be used untreated shall have as little sapwood as possible.

12.3 Design Considerations

12.3.1 *General*

Timber piles shall be designed in such a way that the load from the structure can be transmitted to the subsurface with adequate factor of safety against shear failure of subsurface and without causing such settlement (differential or total), which may result in structural damage and/or functional distress under permanent/transient loading. The pile shaft should have adequate structural capacity to withstand all loads (vertical, axial or otherwise) and moments which are to be transmitted to the subsoil and shall be designed according to Part 6 'Structural Design, Section 3 Timber and Bamboo, Subsection 3A Timber' of the Code.

12.3.2 *Adjacent Structures*

When working near existing structures, care shall be taken to avoid damage to such structures. In case of deep excavations adjacent to piles, proper shoring or other suitable arrangement shall be made to guard against undesired lateral movement of soil.

12.3.3 *Pile Capacity*

See **8.3.3**.

12.3.4 *Structural Capacity*

The pile shall have the necessary structural strength to transmit the load imposed on it to the soil. Load tests shall be conducted on a single pile or preferably on a group of piles. For compaction piles, test should be done on a group of piles with their caps resting on the ground as good practice [6-2(19)]. If such test data is not available, the load carried by the pile shall be determined by the Engineering News formula (*see* Note).

NOTE — For timber piles, the load carried shall be determined by the Engineering News formula given below. Care shall be taken that while counting the number of blows, the head of the timber pile is not broomed or brushed and in case of interrupted driving, counting shall be done after 300 mm of driving.

For piles driven with drop hammer:

$$P = \frac{160WH}{S+25}$$

For piles driven with single-acting steam hammer:

$$P = \frac{160WH}{S+2.5}$$

where

P = safe load on pile, in kN;

W = weight of monkey, in kN;

H = free fall of monkey, in m; and

S = penetration of pile, in mm, to be taken as the average of the last three blows.

12.3.5 For detailed information on timber piles regarding spacing, classification, control of pile driving, storing and handling, reference shall be made to good practice [6-2(28)].

13 OTHER FOUNDATIONS, SUBSTRUCTURES AND FOUNDATIONS FOR SPECIAL STRUCTURES

13.1 Pier Foundations

13.1.1 *Design Considerations*

13.1.1.1 *General*

The design of concrete piers shall conform to the

requirements for columns specified in Part 6 'Structural Design, Section 5 Concrete' of the Code. If the bottom of the pier is to be belled so as to increase its load carrying capacity, such bell shall be at least 300 mm thick at its edge. The sides shall slope at an angle of not less than 60° with the horizontal. The least permissible dimensions shall be 600 mm, irrespective of the pier being circular, square or rectangular. Piers of smaller dimensions if permitted shall be designed as piles (*see* **8** and **9**).

13.1.1.2 *Plain concrete piers*

The height of the pier shall not exceed 6 times the least lateral dimension. When the height exceeds 6 times the least lateral dimension, buckling effect shall be taken into account, but in no case shall the height exceed 12 times the least lateral dimension.

When the height exceeds 6 times the least lateral dimension, the deduction in allowable stress shall be given by the following formula:

$$f_c' = f_c\left(1.3 - \frac{H}{20D}\right)$$

where

f_c' = reduced allowable stress,

f_c = allowable stress,

H = height of pier, and

D = least lateral dimension.

NOTE – The above provision shall not apply for piers where the least lateral dimension is 1.8 m or greater.

13.1.1.3 *Reinforced concrete piers*

When the height of the pier exceeds 18 times its least dimension, the maximum load shall not exceed:

$$P' = P\left(1.5 - \frac{H}{36D}\right)$$

where

P' = permissible load;

P = permissible load when calculated as axially loaded short column;

H = height of the pier measured from top of bell, if any, to the level of cut-off of pier; and

D = least lateral dimension.

13.2 Design and construction of machine foundations, diaphragm walls, etc, shall be carried out in accordance with good practice [6-2(29)].

14 GROUND IMPROVEMENT

14.1 In poor and weak subsoils, the design of conventional foundation for structures and equipment may present problems with respect to both sizing of foundation as well as control of foundation settlements. A viable alternative in certain situations, is to improve the subsoil to an extent such that the subsoil would develop an adequate bearing capacity and foundations constructed after subsoil improvement would have resultant settlements within acceptance limits. This method/technique is called ground improvement which is used to improve *in-situ* soil characteristics by improving its engineering performance as per the project requirement by altering its natural state, instead of having to alter the design in response to the existing ground limitations. The improvement is in terms of increase in bearing capacity, shear strength, reducing settlement and enhancing drainage facility, mitigating liquefaction potential, etc, of soil, as also in improving lateral capacity in case of deep foundations.

14.2 For provisions with regard to necessary data to be collected to establish the need for ground improvement at a site; considerations for establishing need for ground improvement methods; selection of ground improvement techniques; equipment and accessories for ground improvement; control of ground improvement works and recording of data, reference shall be made to good practice [6-2(30)]. Annex K presents various methods of ground improvement along with principles, applicability to various soil conditions, material requirements, equipment required, results likely to be achieved and limitations. This table may be referred to as guidance for selecting the proper method for a situation {*see also* good practice [6-2(30)] for details}.

14.2.1 For provisions relating to ground improvement by reinforcing the ground using stone columns so as to meet the twin objective of increasing the bearing capacity with simultaneous reduction of settlements, reference shall be made to good practice [6-2(31)].

14.2.2 Whenever soft cohesive soil strata underlying a structure are unable to meet the basic requirements of safe bearing capacity and tolerable settlement, ground improvement is adopted to make it suitable for supporting the proposed structure. Both the design requirements that is shear strength and settlement under loading, can be fulfilled by consolidating the soil by applying a preload, if necessary, before the construction of the foundation. This consolidation of soil is normally accelerated with the use of vertical drains. For provisions relating to ground improvement by preconsolidation using vertical drains, reference shall be made to good practice [6-2(32)].

14.2.3 Use of suitable geo-synthetics/geo-textiles may be made in an approved manner for ground improvement, where applicable. *See also* accepted standards [6-2(33)].

ANNEX A

(*Clauses* 7.4.1.11 *and* B-3.3)

DETERMINATION OF MODULUS OF ELASTICITY (E_s) AND POISSON'S RATIO (μ)

A-1 DETERMINATION OF MODULUS OF ELASTICITY(E_s)

The modulus of elasticity is a function of composition of the soil, its void ratio, stress history and loading rate. In granular soils it is a function of the depth of the strata, while in cohesive soil it is markedly influenced by the moisture content. Due to its great sensitivity to sampling disturbance, accurate evaluation of the modulus in the laboratory is extremely difficult. For general cases, therefore, determination of the modulus may be based on field tests (*see* **A-2**). Where properly equipped laboratory and sampling facility is available, E_s may be determined in the laboratory (*see* **A-3**).

A-2 FIELD DETERMINATION

A-2.1 The value of E_s shall be determined from plate load test in accordance with good practice [6-2(12)].

$$E_S = qB\frac{\left(1-\mu^2\right)}{s}I_w$$

where

q = intensity of contact pressure,

B = least lateral dimension of test plate,

s = settlement,

μ = Poisson's ratio, and

I_w = influence ratio

= 0.82 for a square plate,

= 1.00 for a circular plate.

NOTE — While this procedure may be adequate for light or less important structures under normal conditions, relevant laboratory tests or field tests are essential in the case of unusual soil types and for all heavy and important structures. Plate load test, though useful in obtaining the necessary information about the soil with particular reference to design of foundation has some limitations. The test results reflect only the character of the soil located within a depth of less than twice the width of the bearing plate. Since the foundations are generally larger than the test plates, the settlement and shear resistance will depend on the properties of a much thicker stratum. Moreover, this method does not give the ultimate settlements particularly in case of cohesive soils. Thus the results of the test are likely to be misleading, if the character of the soil changes at shallow depths, which is not uncommon. A satisfactory load test should, therefore, include adequate soil exploration {*see* good practice [6-2(2)]} with due attention being paid to any weaker stratum below the level of the footing. Another limitation is the concerning of the effect of size of foundation. For clayey soils the bearing capacity (from shear consideration) for a larger foundation is almost the same as that for the smaller test plate. But in dense sandy soils the bearing capacity increases with the size of the foundation. Thus tests with smaller size plate tend to give conservative values in dense sandy soils. It may, therefore, be necessary to test with plates of at least three sizes and the bearing capacity results extrapolated for the size of the actual foundation (minimum dimensions in the case of rectangular footings).

A-2.1.1 The average value of E_s shall be based on a number of plate load tests carried out over the area, the number and location of the tests, depending upon the extent and importance of the structure.

A-2.1.2 *Effect of Size*

In granular soils the value of E_s corresponding to the size of the raft shall be determined as follows:

$$E_s = E_p\frac{B_f}{B_p}\left[\frac{B_f+B_p}{2B_f}\right]^2$$

Where B_f, B_p represent sizes of foundation and plate and E_p is the modulus determined by the plate load test.

A-2.2 For stratified deposits or deposits with lenses of different materials, results of plate load test will be unreliable and static cone penetration tests may be carried out to determine E_s.

A-2.2.1 Static cone penetration tests shall be carried out in accordance with accepted standard [6-2(21)]. Several tests shall be carried out at regular depth intervals up to a depth equal to the width of the raft and the results plotted to obtain an average value of E_s.

A-2.2.2 The value of E_s may be determined from the following relationship:

$$E_s = 2\,C_{kd}$$

where

C_{kd} = cone resistance, in kN/m^2.

A-3 LABORATORY DETERMINATION OF E_S

A-3.1 The value of E_s shall be determined by conducting triaxial test in the laboratory in accordance with accepted standard [6-2(34)] on samples collected with least disturbances.

A-3.2 In the first phase of the triaxial test, the specimen shall be allowed to consolidate fully under an all-round confining pressure equal to the vertical effective overburden stress for the specimen in the field. In the

second phase, after equilibrium has been reached, further drainage shall be prevented and the deviator stress shall be increased from zero value to the magnitude estimated for the field loading condition. The deviator stress shall then be reduced to zero and the cycle of loading shall be repeated.

A-3.3 The value of E_s shall be taken as the tangent modulus at the stress level equal to one-half the maximum deviator stress applied during the second cycle of loading.

ANNEX B

(*Clause* 7.4.1.11)

DETERMINATION OF MODULUS OF SUBGRADE REACTION

B-1 GENERAL

The modulus of subgrade reaction (k) as applicable to the case of load through a plate of size 300 mm x 300 mm or beams 300 mm wide on the soils is given in Table 6 for cohesionless soils and in Table 7 for cohesive soils. Unless more specific determination of k is done (*see* **B-2** and **B-3**) these value may be used for design of raft foundation in cases where the depth of the soil affected by the width of the footing may be considered isotropic and the extra-polation of plate load test results is valid.

Table 6 Modulus of Subgrade Reaction (k) for Cohesionless Soils
(*Clause* B-1)

Sl No.	Soil Characteristic		Modulus of Subgrade Reaction, k[1] kN/m³	
	Relative Density	Standard Penetration Test Value, (N) (Blows per 300 mm)	For Dry or Moist State	For Submerged State
(1)	(2)	(3)	(4)	(5)
i)	Loose	< 10	15 000	9 000
ii)	Medium	10 to 30	15 000 to 47 000	9 000 to 29 000
iii)	Dense	30 and over	47 000 to180 000	29 000 to 108 000

[1] The above values apply to a square plate 300 mm x 300 mm or beams 300 mm wide.

B-2 FIELD DETERMINATION

B-2.1 In cases where the depth of the soil affected by the width of the footing may be considered as isotropic, the value of k may be determined in accordance with accepted standard [6-2(35)]. The test shall be carried out with a plate of size not less than 300 mm.

Table 7 Modulus of Subgrade Reaction (k) for Cohesive Soils
(*Clause* B-1)

Sl No.	Soil Characteristic		Modulus of Subgrade Reaction, k[1] kN/m³
	Consistency	Unconfined Compressive Strength kN/m²	
(1)	(2)	(3)	(4)
i)	Stiff	100 to 200	27 000
ii)	Very stiff	200 to 400	27 000 to 54 000
iii)	Hard	400 and over	54 000 to 108 000

[1] The values apply to a square plate 300 mm x 300 mm. The above values are based on the assumption that the average loading intensity does not exceed half the ultimate bearing capacity.

B-2.2 The average value of k shall be based on a number of plate load tests carried out over the area, the number and location of the tests depending upon the extent and importance of the structure.

B-3 LABORATORY DETERMINATION

B-3.1 For stratified deposits or deposits with lenses of different materials, evaluation of k from plate load test will be unrealistic and its determination shall be based on laboratory tests {*see* good practice [6-2(4)]}.

B-3.2 In carrying out the test, the continuing cell pressure may be so selected as to be representative of the depth of the average stress influence zone (about 0.5 B to B).

B-3.3 The value of k shall be determined from the following relationship:

$$k = 0.65 \times \sqrt[12]{\left(\frac{E_s B^4}{EI}\right)} \cdot \frac{E_s}{\left(1-\mu^2\right)} \cdot \frac{1}{B}$$

where

E_s = modulus of elasticity of soil (*see* Annex A),

E = Young's modulus of foundation material,

μ = Poisson's ratio of soil,

I = moment of inertia of the foundation, and

B = width of the footing.

B-4 CALCULATIONS

When the structure is rigid (*see* Annex C), the average modulus of subgrade reaction may also be determined as follows:

$$k_s = \frac{\text{Average contact pressure}}{\text{Average settlement of the raft}}$$

ANNEX C

(*Clauses* 7.4.4.1, 7.4.4.2 *and* B-4)

RIGIDITY OF SUPERSTRUCTURE AND FOUNDATION

C-1 DETERMINATION OF THE RIGIDITY OF THE STRUCTURE

The flexural rigidity EI of the structure of any section may be estimated according to the relation given below (*see also* Fig. 8)

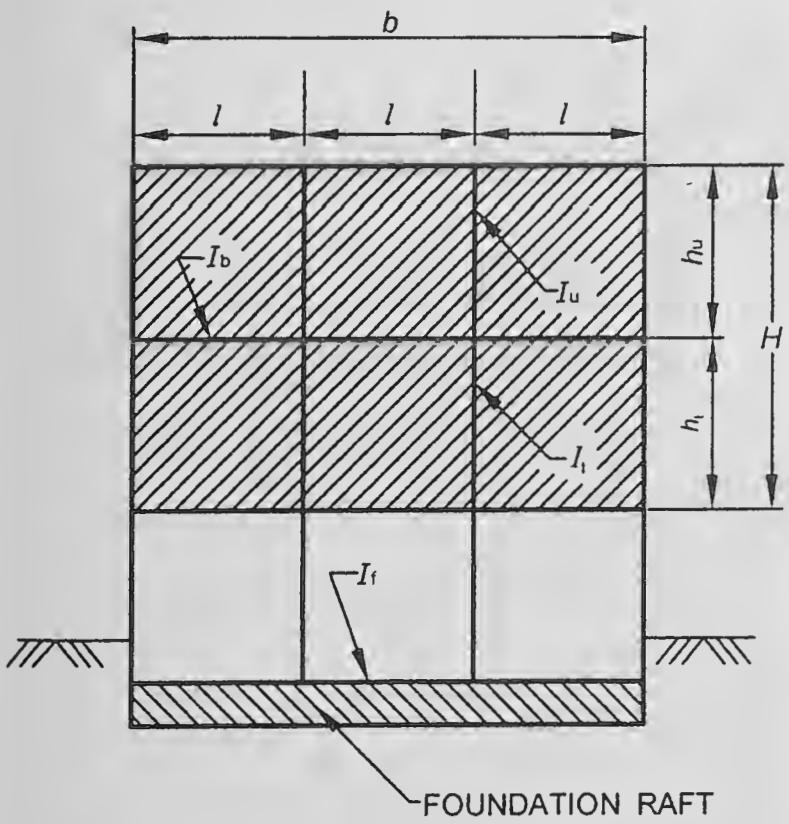

FIG. 8 DETERMINATION OF RIGIDITY OF STRUCTURE

$$EI = \frac{E_1 I_i b^2}{2H^2} + \sum E_2 I_b \left[1 + \frac{\left(I_u' + I_l'\right) b^2}{\left(I_b' + I_u' + I_f'\right) l^2}\right]$$

where

E_1 = modulus of elasticity of the infilling material (wall material), in kN/m^2;

I_i = moment of inertia of the infilling, in m^4;

b = length or breadth of the structure in the direction of bending, in m;

H = total height of the infilling, in m;

E_2 = modulus of elasticity of the frame material, in kN/m^2;

I_b = moment of inertia of the beam, in m^4;

$I_u' = \frac{I_u}{h_u}$;

$I_l' = \frac{I_l}{h_l}$;

$I_b' = \frac{I_b}{l}$;

l = spacing of the columns, in m;

h_u = length of the upper column, in m;

h_l = length of the lower column, in m;

$I_f' = \frac{I_f}{l}$;

I_u = moment of inertia of the upper column, in m^4;

I_l = moment of inertia of the lower column, in m^4; and

I_f = moment of inertia of the foundation beam or raft, in m^4.

NOTE — The summation is to be done over all the storeys including the foundation beam or raft. In the case of the foundation, I_f' replaces I_b' and I_l becomes zero, whereas for the topmost beam I_u' becomes zero.

C-2 RELATIVE STIFFNESS FACTOR, *K*

C-2.1 Whether a structure behaves as rigid or flexible depends on the relative stiffness of the structure and the foundation soil. This relation is expressed by the relative stiffness factor *K* given below:

a) For the whole structure, $K = \frac{EI}{E_s b^3 a}$

b) For rectangular rafts, $K = \frac{E}{12E_s}\left(\frac{d}{b}\right)^3$

c) For circular rafts, $K = \frac{E}{12E_s}\left(\frac{d}{2R}\right)^3$

where

EI = flexural rigidity of the structure over the length (a), in kN/m^2;

E_s = modulus of compressibility of the foundation soil, in kN/m^2;

b = length of the section in the bending axis, in m;

a = length perpendicular to the section under investigation, in m;

d = thickness of the raft or beam, in m; and

R = radius of the raft, in m.

C-2.1.1 For $K > 0.5$, the foundation may be considered as rigid [*see* **7.4.4.1** (a)].

C-3 DETERMINATION OF CRITICAL COLUMN SPACING

Evaluation of the characteristics λ is made as follows:

$$\lambda = \sqrt[4]{\left(\frac{kB}{4E_c I}\right)}$$

where

k = modulus of subgrade reaction, in kN/m^3, for footing of width *B*, in m (*see* Annex A);

B = width of raft, in m;

E_c = modulus of elasticity of concrete, in kN/m^2; and

I = moment of inertia of raft, in m^4.

ANNEX D

(*Clause* 7.4.4.1)

CALCULATION OF PRESSURE DISTRIBUTION BY CONVENTIONAL METHOD

D-1 DETERMINATION OF PRESSURE DISTRIBUTION

The pressure distribution (q) under the raft shall be determined by the following formula:

$$q = \frac{Q}{A} \pm \frac{Qe_y'}{I_x'} y \pm \frac{Qe_x'}{I_y'} x$$

where

Q = total vertical load on the raft,

A = total area of the raft,

e_x', e_y', I_x', I_y' = eccentricities and moments of inertia about the principal axes, through the centroid of the section, and

x, y = coordinates of any given point on the raft with respect to the x and y axes passing through the centroid of the area of the raft.

I_x', I_y', e_x', e_y' may be calculated from the following equations:

$$I_x' = I_x - \frac{I_{xy}^2}{I_y}$$

$$I_y' = I_y - \frac{I_{xy}^2}{I_x}$$

$$e_x' = e_x - \frac{I_{xy}}{I_x} e_y$$

$$e'_y = e_y - \frac{I_{xy}}{I_y} e_x$$

where

I_x, I_y = moment of inertia of the area of the raft respectively about the x and y axes through the centroid,

$I_{xy} = \int xy \cdot dA$ for the whole area about x and y axes through the centroid, and

e_x, e_y = eccentricities in the x and y directions of the load from the centroid.

For a rectangular raft, the equation simplifies to:

$$q = \frac{Q}{A}\left(1 \pm \frac{12 e_y y}{b^2} \pm \frac{12 e_x x}{a^2}\right)$$

where

a and b = dimensions of the raft in the x and y directions, respectively.

NOTE — If one or more of the values of (q) are negative as calculated by the above formula, it indicates that the whole area of foundation is not subject to pressure and only a part of the area is in contact with the soil, and the above formula will still hold good, provided the appropriate values of I_x, I_y, I_{xy}, e_x and e_y, are used with respect to the area in contact with the soil instead of the whole area.

ANNEX E

(*Clause* 7.4.4.2)

CONTACT PRESSURE DISTRIBUTION AND MOMENTS BELOW FLEXIBLE FOUNDATION

E-1 CONTACT PRESSURE DISTRIBUTION

E-1.1 The distribution of contact pressure is assumed to be linear with the maximum value attained under the columns and the minimum value at mid span.

E-1.2 The contact pressure for the full width of the strip under an interior column load located at a point i can be determined as (*see* Fig. 9 A):

$$p_i = \frac{5P_i}{\bar{l}} + \frac{48M_i}{(\bar{l})^2}$$

where

$\bar{l}$ = average length of adjacent span, in m,

P_i = column load, in t at point i, and

M_i = moment under an interior columns loaded at i.

E-1.3 The minimum contact pressure for the full width of the strip at the middle of the adjacent spans can be determined as (*see* Fig. 9A and 9B):

$$p_{ml} = 2P_i\left(\frac{l_r}{l_l \bar{l}}\right) - p_i\left(\frac{\bar{l}}{l_l}\right)$$

$$p_{mr} = 2P_i\left(\frac{l_l}{l_r \bar{l}}\right) - p_i\left(\frac{\bar{l}}{l_r}\right)$$

$$p_m = \frac{p_{ml} + p_{mr}}{2}$$

where l_r, l_l are as shown in Fig. 9A.

E-1.4 If **E-2.3**(a) governs the moment under the exterior columns, contact pressures under the exterior columns and at end of strip can be determined as (*see* Fig. 9C):

$$p_e = \frac{4P_e + \frac{6M_e}{C} - p_m l_l}{C + l_l}$$

$$p_c = -\frac{3M_e}{C^2} - \frac{p_e}{2}$$

where P_e, p_m, M_e, l_1, C are as shown in Fig. 9C.

E-1.5 If **E-2.3**(b) governs the moment under the exterior columns, the contact pressures are determined as (*see* Fig. 9C):

$$p_e = p_c \frac{4P_e - p_m l_l}{4C + l_l}$$

E-2 BENDING MOMENT DIAGRAM

E-2.1 The bending moment under an interior column located at i (*see* Fig. 9A) can be determined as:

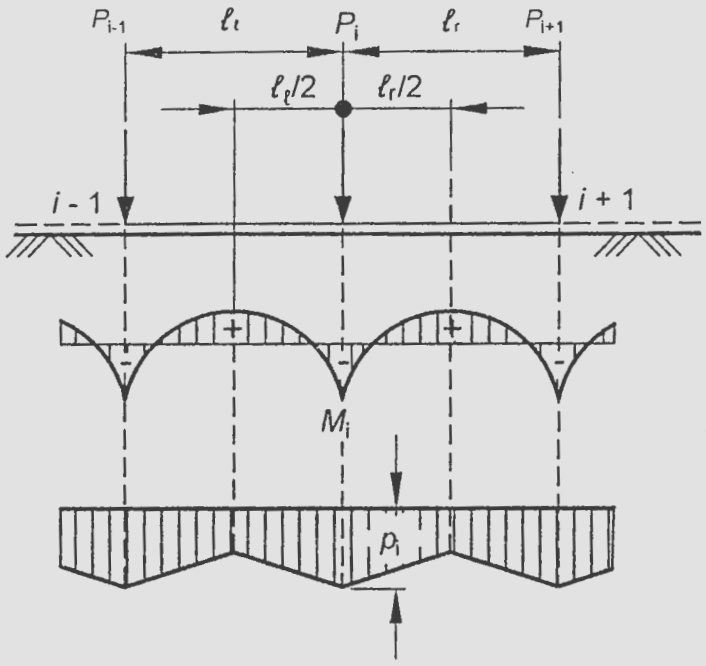

9A MOMENT AND PRESSURE DISTRIBUTION AT INTERIOR COLUMN

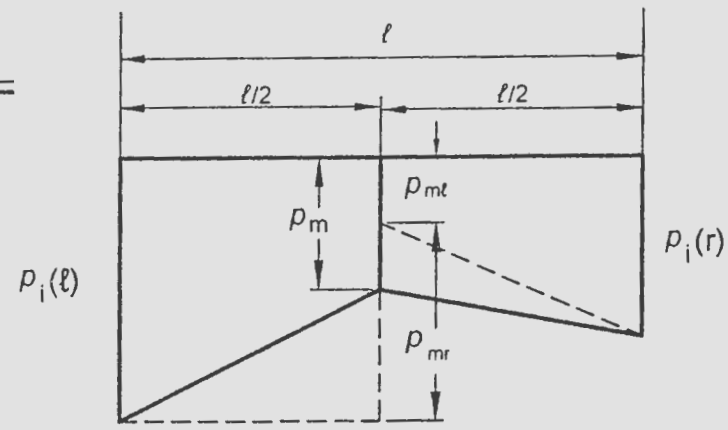

9B PRESSURE DISTRIBUTION OVER AN INTERIOR SPAN

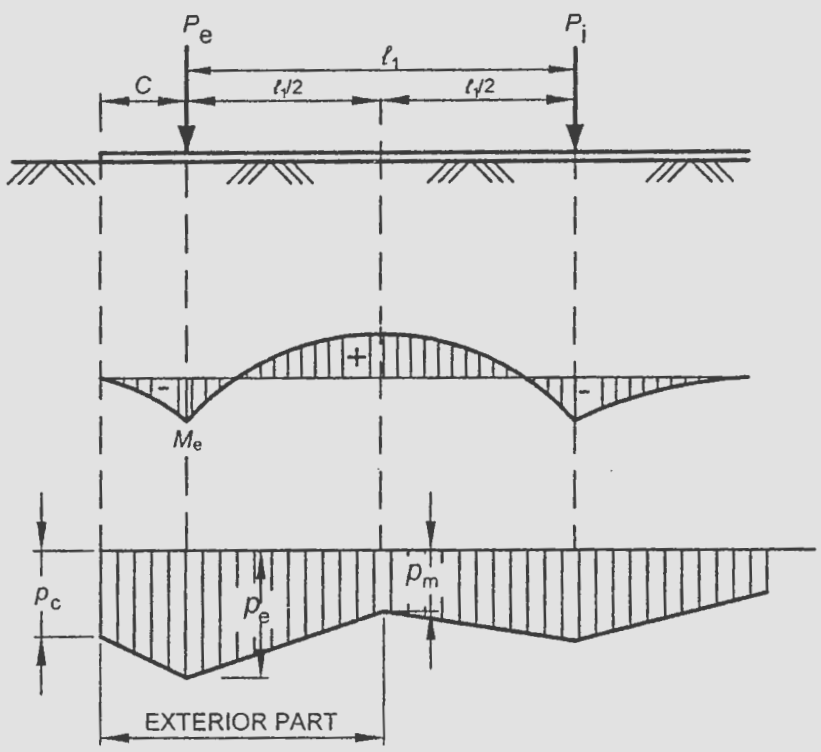

9C MOMENT AND PRESSURE DISTRIBUTION AT EXTERIOR COLUMNS

FIG. 9 MOMENT AND PRESSURE DISTRIBUTION AT COLUMNS

$$M_i = -\frac{P_i}{4\lambda}\left(0.24\lambda\bar{l} + 0.16\right)$$

E-2.2 The bending moment at mid span is obtained as (*see* Fig. 9A):

$$M_m = M_o + M_i$$

where

M_o = moment of simply supported beam

$$= \frac{l^2}{48}\left[p_i(l) + 4p_m + p_i(r)\right]$$

M_i = average of negative moments M_i at each end of the bay.

where $l, p_i(l), p_i(r), p_m$ are as shown in Fig. 9B.

E-2.3 The bending moment M_e under exterior columns can be determined as the least of (*see* Fig. 9C):

a) $$M_{e1} = -\frac{P_e}{4\lambda}\left(0.13\lambda l_1 + 1.06\lambda C - 0.50\right)$$

b) $$M_{e2} = -\frac{\left(4P_e - p_m l_1\right)}{\left(4C + l_1\right)}\frac{C^2}{2}$$

ANNEX F

[*Clause* 7.4.4.2(b)]

FLEXIBLE FOUNDATION — GENERAL CONDITION

F-1 CLOSED FORM SOLUTION OF ELASTIC PLATE THEORY

F-1.1 For a flexible raft foundation with non-uniform column spacing and load intensity, solution of the differential equation governing the behaviour of plates on elastic foundation (Winkler Type) gives radial moment (M_r) tangential moment (M_t) and deflection (w) at any point by the following expressions:

$$M_r = -\frac{P}{4}\left[Z_4\left(\frac{r}{L}\right) - (1-\mu)\frac{Z_3'\left(\frac{r}{L}\right)}{\left(\frac{r}{L}\right)}\right]$$

$$M_t = -\frac{P}{4}\left[\mu Z_4\left(\frac{r}{L}\right) + (1-\mu)\frac{Z_3'\left(\frac{r}{L}\right)}{\left(\frac{r}{L}\right)}\right]$$

$$w = \frac{PL^2}{4D}\cdot Z_3\left(\frac{r}{l}\right)$$

where

P = column load,

r = distance of the point under investigation from column load along radius, and

L = radius of effective stiffness

$$= \left(\frac{D}{k}\right)^{1/4}$$

where

k = modulus of subgrade reaction for footing of width B,

D = flexural rigidity of the foundation,

$$P = \frac{Et^2}{12(1-\mu)^2},$$

T = raft thickness,

E = modulus of elasticity of the foundation material,

μ = Possion's ratio of the foundation material, and

$$\left.\begin{array}{l} Z_3\left(\frac{r}{L}\right), \\ Z_3'\left(\frac{r}{L}\right), \\ Z_4\left(\frac{r}{L}\right) \end{array}\right\} = \text{functions of shear, moment and deflection (}\textit{see}\text{ Fig. 10)}$$

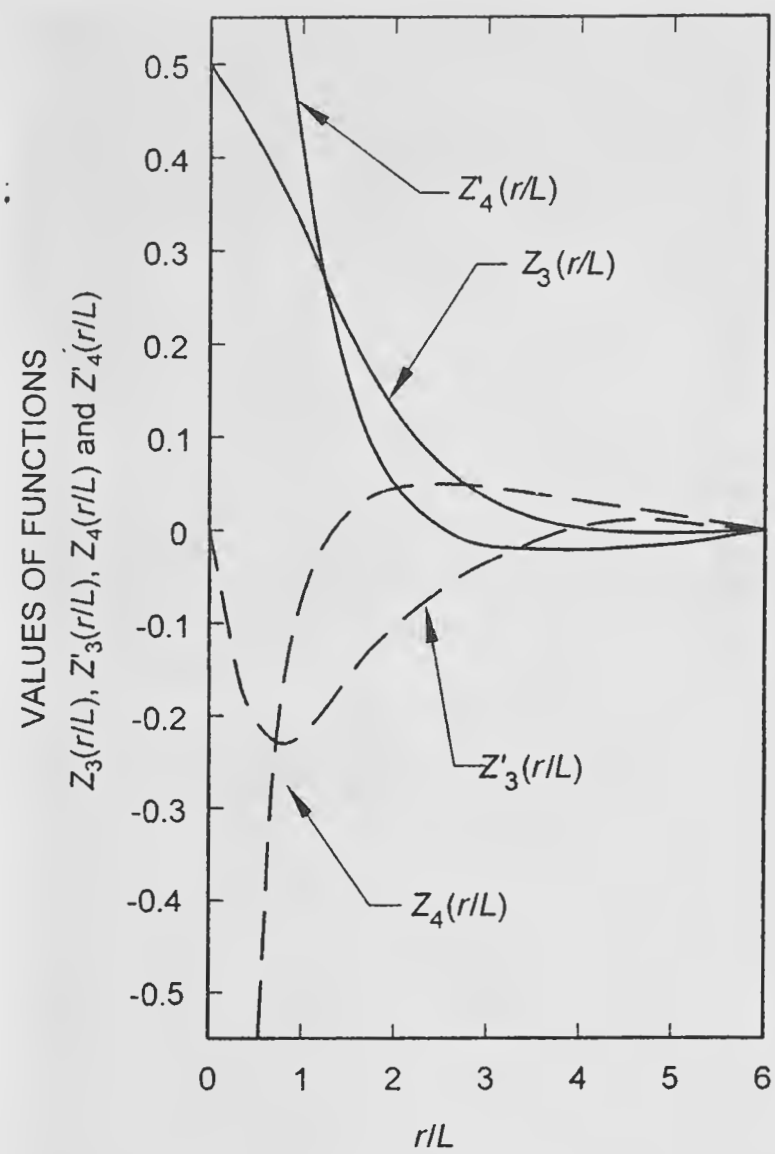

FIG. 10 FUNCTIONS FOR SHEAR, MOMENT AND DEFLECTION

F-1.2 The radial and tangential moments can be converted to rectangular co-ordinates:

$$M_x = M_r \cos^2\phi + M_t \sin^2\phi$$

$$M_y = M_r \sin^2\phi + M_t \cos^2\phi$$

where

ϕ = angle with x-axis to the line joining origin to the point under consideration.

F-1.3 The shear, Q per unit width of raft can be determined by:

$$Q = -\frac{P}{4L}Z_4'\left(\frac{r}{L}\right)$$

where

$Z_4'\left(\frac{r}{L}\right)$ = function for shear (*see* Fig. 10).

F-1.4 When the edge of the raft is located within the radius of influence, the following corrections are to be applied. Calculate moments and shears perpendicular to the edge of the raft within the radius of influence, assuming the raft to be infinitely large. Then apply

opposite and equal moments and shears on the edge of the mat. The method for beams on elastic foundation may be used.

F-1.5 Finally, all moments and shears calculated for each individual column and wall are superimposed to obtain the total moment and shear values.

ANNEX G

(*Clauses* 8.3.3.1.1, 8.3.3.2 *and* 11.3.4)

LOAD CARRYING CAPACITY OF PILES — STATIC ANALYSIS

G-1 PILES IN GRANULAR SOILS

The ultimate load capacity (Q_u) of piles, in kN, in granular soils is given by the following formula:

$$Q_u = A_p(\tfrac{1}{2} D \gamma N_\gamma + P_D N_q) + \sum_{i=1}^{n} K_i P_{Di} \tan \delta_i A_{si} \ldots (1)$$

The first term gives end bearing resistance and the second term gives skin friction resistance.

where

A_p = cross-sectional area of pile tip, in m^2;

D = diameter of pile shaft, in m;

γ = effective unit weight of the soil at pile tip, in kN/m^3;

N_γ and N_q = bearing capacity factors depending upon the angle of internal friction, ϕ at pile tip;

P_D = effective overburden pressure at pile tip, in kN/m^2 (*see* Note 5);

$\sum_{i=1}^{n}$ = summation for layers 1 to n in which pile is installed and which contribute to positive skin friction;

K_i = coefficient of earth pressure applicable for the ith layer (*see* Note 3);

P_{Di} = effective overburden pressure for the ith layer, in kN/m^2;

δ_i = angle of wall friction between pile and soil for the ith layer; and

A_{si} = surface area of pile shaft in the ith layer, in m^2.

NOTES

1 N_γ factor can be taken for general shear failure according to good practice [6-2(11)].

2 N_q factor will depend on the nature of soil, type of pile, the L/B ratio and its method of construction. The values applicable for driven and bored piles are given in Fig. 11A and Fig. 11B, respectively.

3 K_i, the earth pressure coefficient depends on the nature of soil strata, type of pile, spacing of piles and its method of construction. For bored piles in loose to dense sand with ϕ varying between 30° and 40°, K_i values in the range of 1 to 2 may be used for driven piles and in case of bored piles, K_i values in the range of 1 to 1.5 may be used.

4 δ, the angle of wall friction may be taken equal to the friction angle of the soil around the pile shaft.

5 In working out pile capacity by static formula, the maximum effective overburden at the pile tip should correspond to the critical depth, which may be taken as 15 times the diameter of the pile shaft for $\phi \leq 30°$ and increasing to 20 times for $\phi \geq 40°$.

6 For piles passing through cohesive strata and terminating in a granular stratum, a penetration of at least twice the diameter of the pile shaft should be given into the granular stratum.

G-2 PILES IN COHESIVE SOILS

The ultimate load capacity (Q_u) of piles, in kN, in cohesive soils is given by the following formula:

$$Q_u = A_p N_c c_p + \sum_{i=1}^{n} \alpha_i c_i A_{si} \quad \ldots (2)$$

The first term gives end bearing resistance and the second term gives the skin friction resistance.

where

A_p = cross-sectional area of pile tip, in m^2;

N_c = bearing capacity factor, may be taken as 9;

c_p = average cohesion at pile tip, in kN/m^2;

$\sum_{i=1}^{n}$ = summation for layers 1 to n in which pile is installed and which contribute to positive skin friction;

α_i = adhesion factor for the ith layer depending on the consistency of soil (*see* Note);

c_i = average cohesion for the ith layer, in kN/m^2; and

A_{si} = surface area of pile shaft in the ith layer, in m^2.

NOTE — The value of adhesion factor, α_i depends on the undrained shear strength of the clay and may be obtained from Fig. 12.

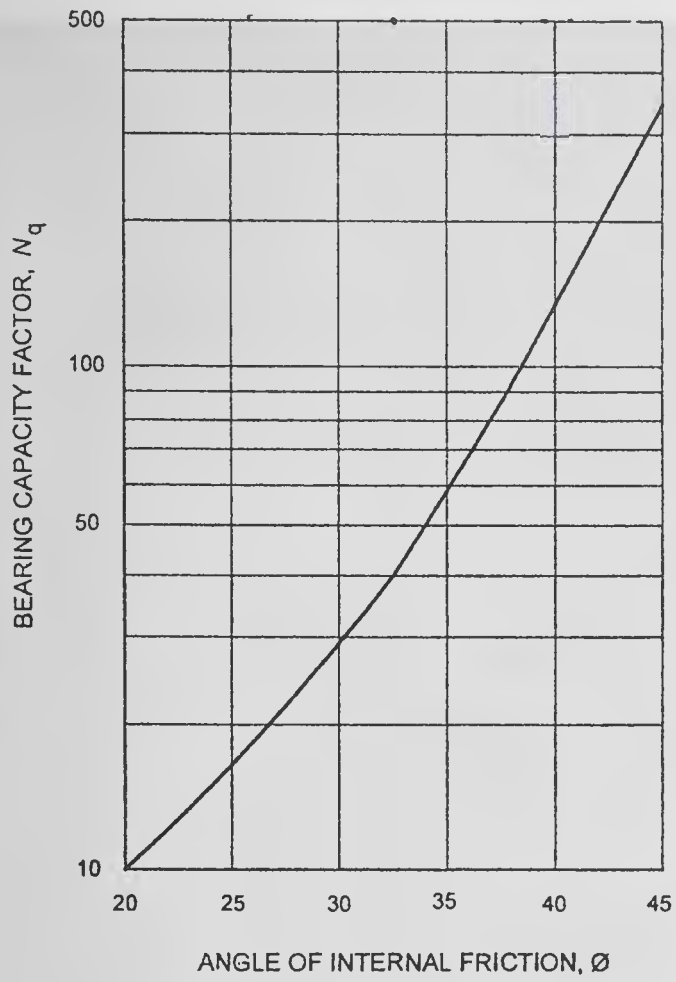

11A BEARING CAPACITY FACTOR, N_q FOR DRIVEN PILES

11A BEARING CAPACITY FACTOR, N_q FOR DRIVEN PILES

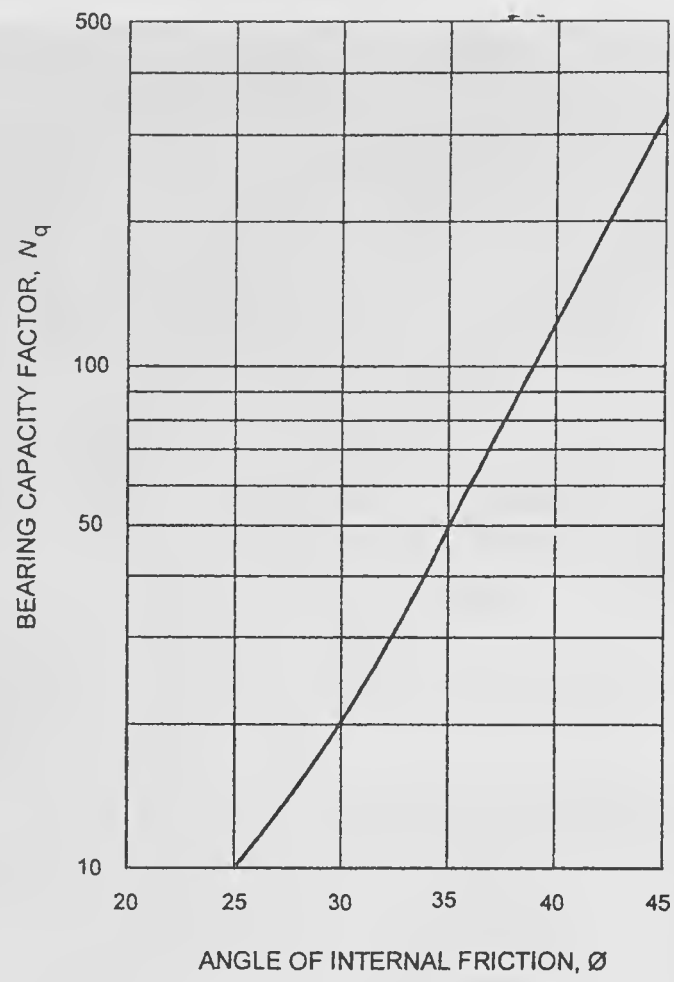

11B BEARING CAPACITY FACTOR, N_q FOR BORED PILES

11B BEARING CAPACITY FACTOR, N_q FOR BORED PILES

FIG. 11 BEARING CAPACITY FACTOR, N_q

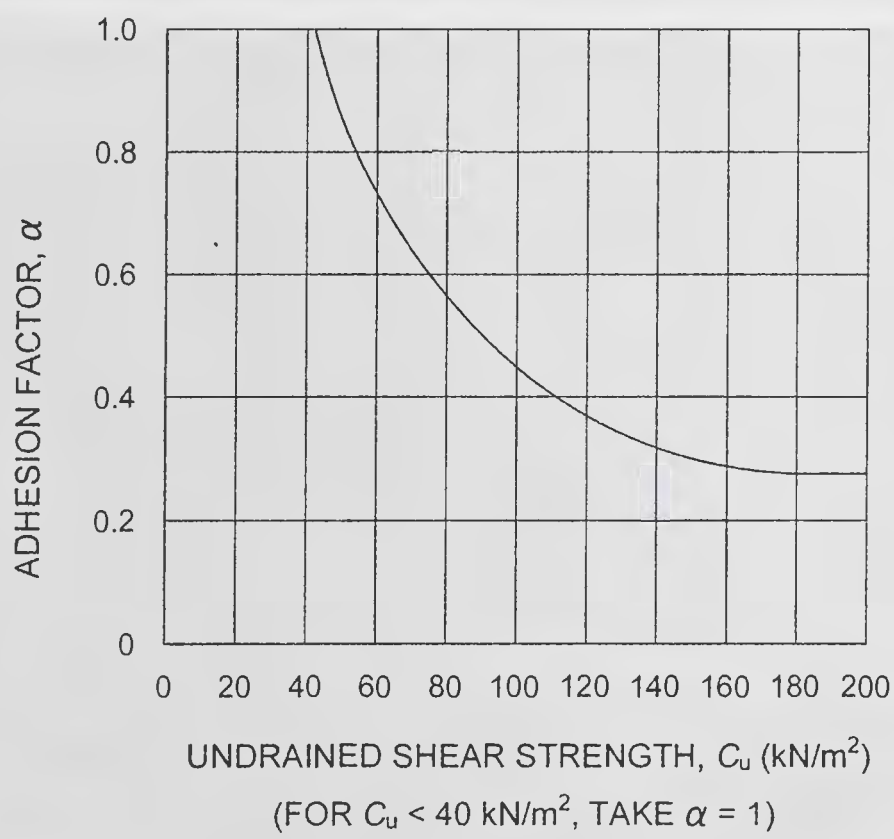

FIG. 12 VARIATION OF α WITH C_u

G-3 USE OF STATIC CONE PENETRATION DATA

G-3.1 When static cone penetration data are available for the entire depth, the following correlation may be used as a guide for the determination of ultimate load capacity of a pile.

G-3.2 Ultimate end bearing resistance (q_u), in kN/m², may be obtained as:

$$q_u = \frac{\frac{q_{c0} + q_{c1}}{2} + q_{c2}}{2}$$

where

q_{c0} = average static cone resistance over a depth of $2D$ below the pile tip, in kN/m²;

q_{c1} = minimum static cone resistance over the same $2D$ below the pile tip, in kN/m²;

q_{c2} = average of the envelope of minimum static cone resistance values over the length of pile of $8D$ above the pile tip, in kN/m²; and

D = diameter of pile shaft.

G-3.3 Ultimate skin friction resistance can be approximated to local side friction (f_s), in kN/m², obtained from static cone resistance as given in Table 8.

G-3.4 The correlation between standard penetration resistance, N (blows/30 cm) and static cone resistance, q_c, in kN/m², as given in Table 9 may be used for working out the end bearing resistance and skin friction resistance of piles. This correlation should only be taken as a guide and should preferably be established for a given site as they can vary substantially with the grain size, Atterberg limits, water table, etc.

Table 8 Side Friction for Different Soil Types
(*Clause* G-3.3)

Sl No. (1)	Type of Soil (2)	Local Side Friction, f_s kN/m² (3)
i)	q_c less than 1 000 kN/m²	$q_c/30 < f_s < q_c/10$
ii)	Clay	$q_c/25 < f_s < 2q_c/25$
iii)	Silty clay and silty sand	$q_c/100 < f_s < q_c/25$
iv)	Sand	$q_c/100 < f_s < q_c/50$
v)	Coarse sand and gravel	$q_c/100 < f_s < q_c/150$

where q_c = cone resistance, in kN/m².

Table 9 Corelation Between N and q_c for Different Types of Soil
(*Clause* G-3.4)

Sl No. (1)	Type of Soil (2)	q_c/N (3)
i)	Clay	150-200
ii)	Silts, sandy silts and slightly cohesive silt-sand mixtures	200-250
iii)	Clean fine to medium sand and slightly silty sand	300-400
iv)	Coarse sand and sands with little gravel	500-600
v)	Sandy gravel and gravel	800-1 000

G-4 USE OF STANDARD PENETRATION TEST DATA FOR COHESIONLESS SOIL

G-4.1 The correlation suggested by Meyerhof using standard penetration resistance, N in saturated cohesionless soil to estimate the ultimate load capacity of driven pile is given below. The ultimate load capacity of pile (Q_u), in kN, is given as:

$$Q_u = 40\,N\,\frac{L_b}{D}A_p + \frac{\overline{N}A_s}{0.50} \qquad \ldots(3)$$

The first term gives the end bearing resistance and the second term gives the frictional resistance.

where

N = average N values at pile tip;

L_b = length of penetration of pile in the bearing strata, in m;

D = diameter or minimum width of pile shaft, in m;

A_p = cross-sectional area of pile tip, in m²;

$\overline{N}$ = average N along the pile shaft; and

A_s = surface area of pile shaft, in m².

NOTE — The end bearing resistance should not exceed 400 NA_p

G-4.2 For non-plastic silt or very fine sand the equation has been modified as:

$$Q_u = 30\,N\,\frac{L_b}{D}A_p + \frac{\overline{N}A_s}{0.60} \qquad \ldots(4)$$

The meaning of all terms is same as for equation 3.

G-4.3 The correlation suggested by Meyerhof using standard penetration resistance, N in saturated cohesionless soil to estimate the ultimate load capacity of bored pile is given below. The ultimate capacity of pile (Q_u), in kN, is given as:

$$Q_u = 13\,N\,\frac{L_b}{D}A_p + \frac{\overline{N}A_s}{0.50} \qquad \ldots(5)$$

The first term gives end bearing resistance and the second term gives frictional resistance.

The meaning of all terms is same as for equation 3.

NOTE — The end bearing resistance should not exceed 130 NA_p.

G-4.4 For non-plastic silt or very fine sand the equation has been modified as:

$$Q_u = 10\,\frac{L_b}{D}A_p + \frac{\overline{N}A_s}{0.60} \qquad \ldots(6)$$

The meaning of all terms is same as for equation 3.

G-5 FACTOR OF SAFETY

The minimum factor of safety for arriving at the safe pile capacity from the ultimate capacity obtained by using static formulae shall be 2.5.

G-6 PILES IN STRATIFIED SOIL

In stratified soil/C-ϕ soil, the ultimate load capacity of piles should be determined by calculating the skin friction and end bearing in different strata by using appropriate expressions given in **G-1** and **G-2**.

G-7 PILES IN HARD ROCK

When the crushing strength of the rock is more than characteristic strength of pile concrete, the rock should be deemed as hard rock. Bored piles resting directly on hard rock may be loaded to their safe structural capacity.

G-8 PILES IN WEATHERED/SOFT ROCK

For bored piles founded in weathered/soft rock different empirical approaches are used to arrive at the socket length necessary for utilizing the full structural capacity of the pile.

Since it is difficult to collect cores in weathered/soft rocks, the method suggested by Cole and Stroud using 'N' values is more widely used. The allowable load on the pile, Q_a, in kN, by this approach, is given by:

$$Q_a = c_{u1} N_c \cdot \frac{\pi B^2}{4 F_s} + \alpha\, c_{u2} \cdot \frac{\pi B L}{F_s}$$

where

c_{u1} = shear strength of rock below the base of the pile, in kN/m² (*see* Fig. 13);

N_c = bearing capacity factor taken as 9;

F_s = factor of safety usually taken as 3;

α = 0.9 (recommended value);

c_{u2} = average shear strength of rock in the socketed length of pile, in kN/m² (*see* Fig. 13);

B = minimum width of pile shaft (diameter in case of circular piles), in m; and

L = socket length of pile, in m.

NOTE — For $N \geq 60$, the stratum is to be treated as weathered rock rather than soil.

Shear Strength kN/m²	Approx. N Value	Strength / Consistency	Grade	Breakability	Penetration	Strength
40000		Strong	A	Difficult to break against solid object with hammer		Can not be scratched with knife
20000						
10000	600	Moderately strong	B	Broken against solid object with hammer		Can just be scratched with knife
8000						
6000						
4000	400	Moderately weak	C	Broken in hand by hitting with hammer		Scratched with knife. Can just be scratched with thumb-nail
2000	200	Weak	D	Broken by leaning on sample with hammer	No penetration with knife	Scratched with thumb-nail
1000			E	Broken by hand	Penetration to about 2 mm with knife	
800	100					
600	80	Hard or very weak	F	Easily broken by hand	Penetration to about 5 mm with knife	
400	60					
200	40	Very stiff			Penetrated by thumb-nail and to about 1.5 mm with knife	
100	20	Stiff			Indented by thumb	
80						
60	10	Firm			Penetrated by thumb with effort	
40	8	Soft			Easily penetrated by thumb	
	6					
20	4					
10	2	Very Soft				

NOTE — Standard penetration test may not be practicable for N values greater than 200. In such cases, design may be done on the basis of shear strength of rock.

FIG. 13 CONSISTENCY AND SHEAR STRENGTH OF WEATHERED ROCK

ANNEX H

(*Clause* 8.3.5.2)

ANALYSIS OF LATERALLY LOADED PILES

H-1 GENERAL

H-1.1 The ultimate resistance of a vertical pile to a lateral load and the deflection of the pile as the load builds up to its ultimate value are complex matters involving the interaction between a semi-rigid structural element and soil which deforms partly elastically and partly plastically. The failure mechanisms of an infinitely long pile and that of a short rigid pile are different. The failure mechanisms also differ for a restrained and unrestrained pile head conditions.

Because of the complexity of the problem only a procedure for an approximate solution that is adequate in most of the cases is presented here. Situations that need a rigorous analysis shall be dealt with accordingly.

H-1.2 The first step is to determine, if the pile will behave as a short rigid unit or as an infinitely long flexible member. This is done by calculating the stiffness factor R or T for the particular combination of pile and soil.

Having calculated the stiffness factor, the criteria for behaviour as a short rigid pile or as a long elastic pile are related to the embedded length L_e of the pile. The depth from the ground surface to the point of virtual fixity is then calculated and used in the conventional elastic analysis for estimating the lateral deflection and bending moment.

H-2 STIFFNESS FACTORS

H-2.1 The lateral soil resistance for granular soils and normally consolidated clays which have varying soil modulus is modeled according to the equation:

$$\frac{p}{y} = \eta_h z$$

where

p = lateral soil reaction per unit length of pile at depth z below ground level;

y = lateral pile deflection; and

η_h = modulus of subgrade reaction for which the recommended values are given in Table 10.

H-2.2 The lateral soil resistance for over-consolidated clays with constant soil modulus is modeled according to the equation:

$$\frac{p}{y} = K$$

where

$$K = \frac{k_1}{1.5} \times \frac{0.3}{B}$$

where k_1 is Terzaghi's modulus of subgrade reaction as determined from load deflection measurements on a 30 cm square plate and B is the width of the pile (diameter in case of circular piles). The recommended values of k_1 are given in Table 11.

Table 10 Modulus of Subgrade Reaction for Granular Soils and Normally Consolidated Clays, η_h, kN/m^3

(*Clause* H-2.1)

Sl No.	Soil Type	N (Blows/ 30 cm)	Range of η_h kN/m^3 x 10^3	
			Dry	Submerged
(1)	(2)	(3)	(4)	(5)
i)	Soft organic silt	–	–	0.15
ii)	Soft normally consolidated clay	0 - 4	–	0.35 - 0.7
iii)	Very loose sand	0 - 4	< 0.4	< 0.2
iv)	Loose sand	4 - 10	0.4 - 2.5	0.2 - 1.4
v)	Medium sand	10 - 35	2.5 - 7.5	1.4 - 5.0
vi)	Dense sand	> 35	7.5 - 20.0	5.0 - 12.0

NOTE — The η_h values may be interpolated for intermediate standard penetration values, N.

Table 11 Modulus of Subgrade Reaction for Cohesive Soil, k_1, kN/m^3

(*Clause* H-2.2)

Sl No.	Soil Consistency	Unconfined Compression Strength, q_u kN/m^3 × 10^3	Range of k_1 kN/m^2
(1)	(2)	(3)	(4)
i)	Soft	25-50	4.5[illegible]
ii)	Medium stiff	50-100	9.0-18.0
iii)	Stiff	100-200	18.0-36.0
iv)	Very stiff	200-400	36.0-72.0
v)	Hard	> 400	>72.0

NOTE — For q_u less than 25, k_1 may be taken as zero, which implies that there is no lateral resistance.

H-2.3 Stiffness Factors

H-2.3.1 *For Piles in Sand and Normally Consolidated Clays*

Stiffness factor T, in m $= \sqrt[5]{\frac{EI}{\eta_h}}$

where

E = Young's modulus of pile material, in MN/m^2;

I = moment of inertia of the pile cross-section, in m^4; and

η_h = modulus of subgrade reaction variation, in MN/m^3 (*see* Table 10).

H-2.3.2 *For Piles in Over-Consolidated Clays*

$$\text{Stiffness factor } R, \text{ in m} = \sqrt[4]{\frac{EI}{KB}}$$

where

E = Young's modulus of pile material, in MN/m²;

I = moment of inertia of the pile cross-section, in m⁴;

K = $\frac{k_1}{1.5} \times \frac{0.3}{B}$ (*see* Table 11 for values of k_1, in MN/m³ (*see also* Note); and

B = width of pile shaft (diameter in case of circular piles), in m.

NOTE – Table 11 shall be referred if the average unconfined compression strength. q_u is greater than or equal to 100 kN/m².

H-3 CRITERIA FOR SHORT RIGID PILES AND LONG ELASTIC PILES

Having calculated the stiffness factor T or R, the criteria for behaviour as a short rigid pile or as a long elastic pile are related to the embedded length L_e as given in Table 12.

H-4 DEFLECTION AND MOMENTS IN LONG ELASTIC PILES

H-4.1 Equivalent cantilever approach gives a simple procedure for obtaining the deflections and moments due to relatively small lateral loads. This requires the determination of depth of virtual fixity, z_f.

Table 12 Criteria for Behaviour of Pile Based on its Embedded Length
(*Clause* H-3)

Sl No.	Type of Pile Behaviour	Relation of Embedded Length with Stiffness Factor	
		Linearly Increasing	Constant
(1)	(2)	(3)	(4)
i)	Short (rigid) pile	$L_e \le 2T$	$L_e \le 2R$
ii)	Long (elastic) pile	$L_e \ge 4T$	$L_e \ge 3.5R$

NOTE — The intermediate L_e shall indicate a case between rigid pile behaviour and elastic pile behaviour.

The depth to the point of fixity may be read from the plots given in Fig. 14. 'e' is the effective eccentricity of the point of load application obtained either by converting the moment to an equivalent horizontal load or by actual position of the horizontal load application. R and T are the stiffness factors described earlier.

H-4.2 The pile head deflection, y shall be computed using the following equations:

$$\text{Deflection}, y = \frac{H(e+z_f)^3}{3EI} \times 10^3 \quad \text{(for free head pile)}$$

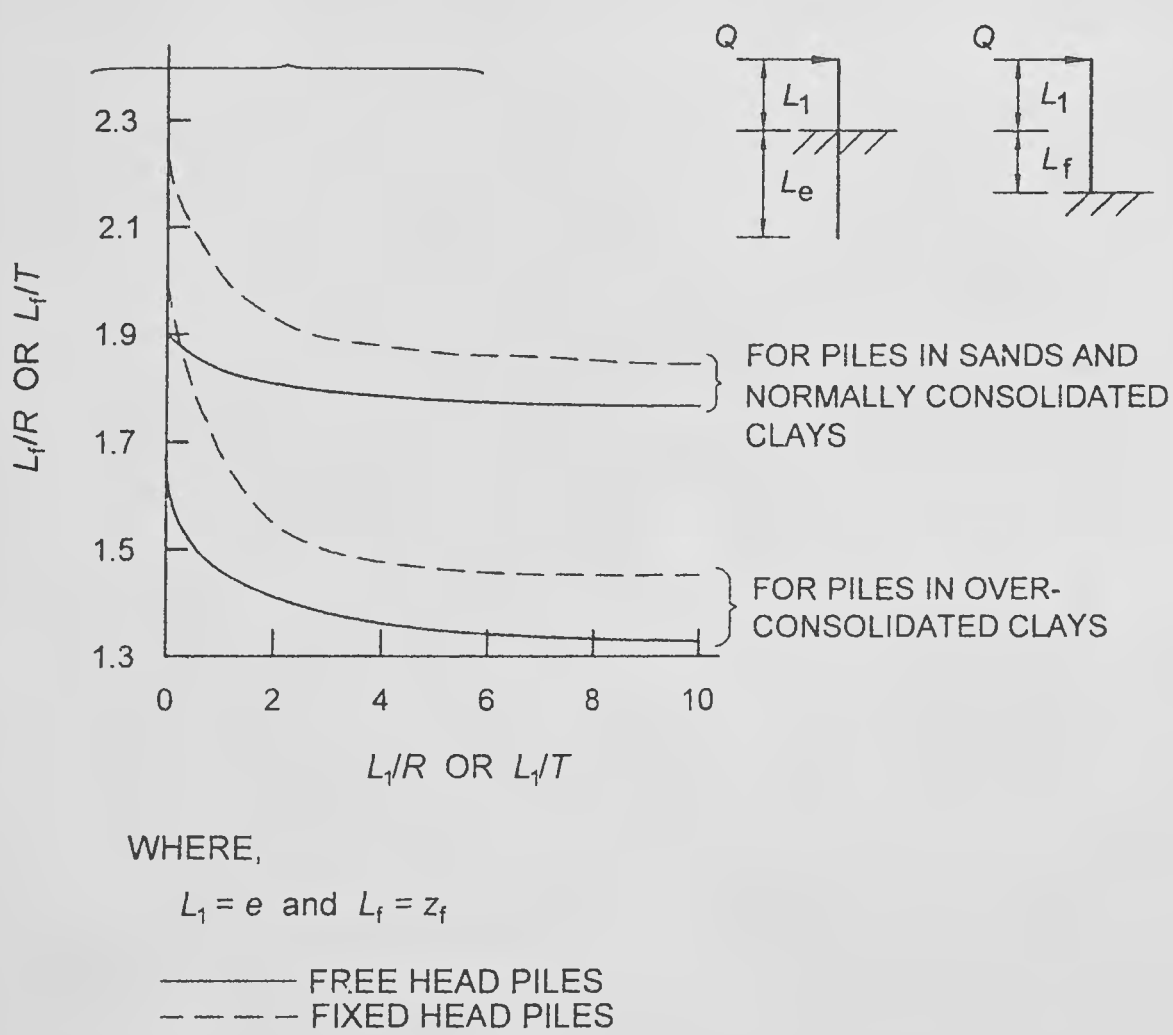

FIG. 14 DEPTH OF FIXITY

$$\text{Deflection, } y = \frac{H\left(e+z_f\right)^3}{12EI} \times 10^3 \text{ (for fixed head pile)}$$

where

H = lateral load, in kN;

y = deflection of pile head, in mm;

E = Young's modulus of pile material, in kN/m^2;

I = moment of inertia of the pile cross-section, in m^4;

z_f = depth to point of fixity, in m; and

e = cantilever length above ground/bed to the point of load application, in m.

H-4.3 The fixed end moment of the pile for the equivalent cantilever may be determined from the following expressions:

$$\text{Fixed end moment, } M_F = H\left(e+z_f\right) \text{ (for free head pile)}$$

$$\text{Fixed end moment, } M_F = \frac{H\left(e+z_f\right)}{2} \text{ (for fixed head pile)}$$

The fixed head moment, M_F of the equivalent cantilever is higher than the actual maximum moment M in the pile. The actual maximum moment may be obtained by multiplying the fixed end moment of the equivalent cantilever by a reduction factor, m, given in Fig. 15.

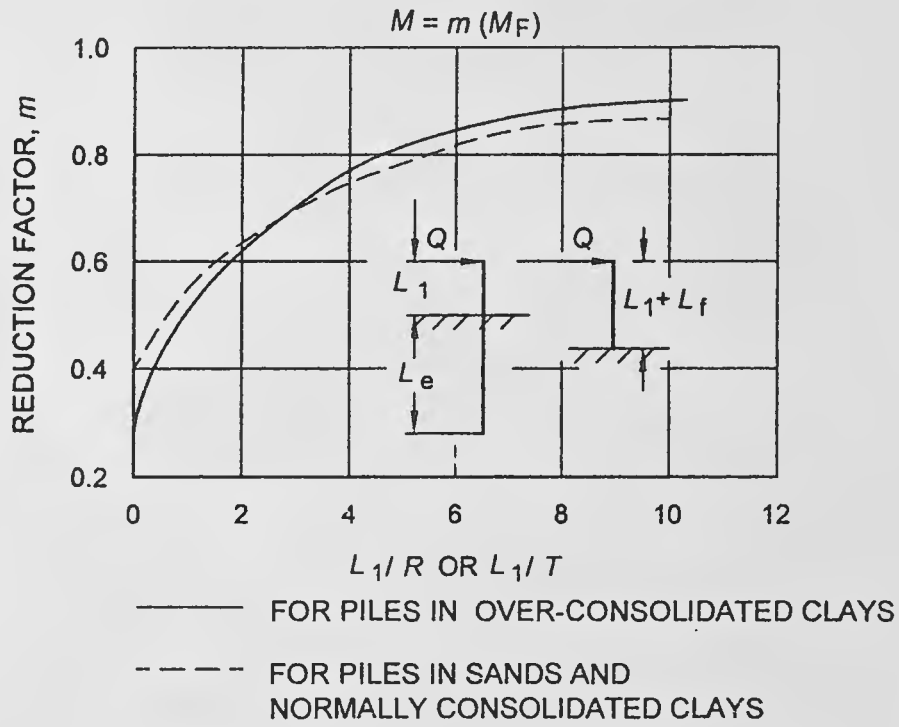

15A FOR FREE HEAD PILE

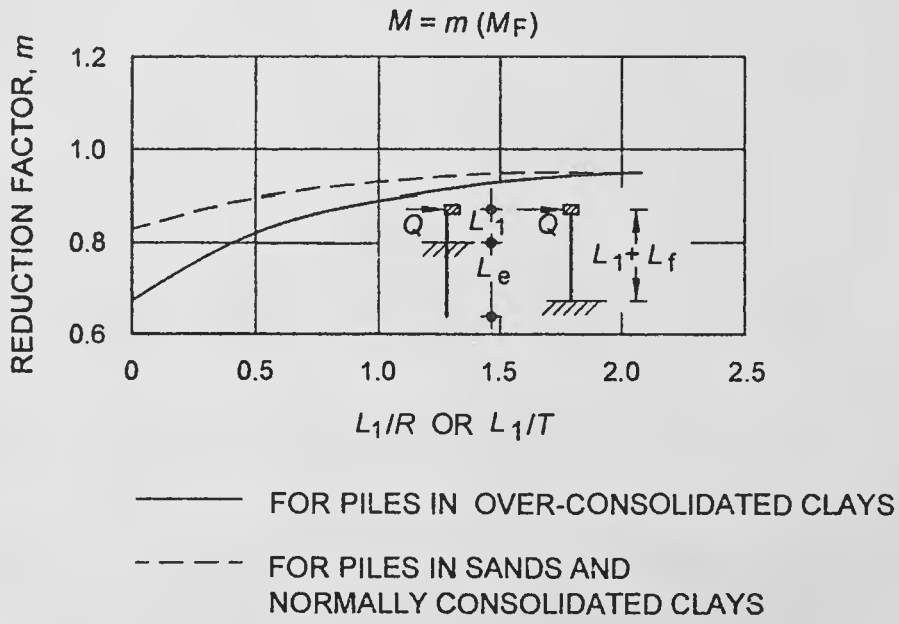

15B FOR FIXED HEAD PILE

FIG. 15 DETERMINATION OF REDUCTION FACTORS FOR COMPUTATION OF MAXIMUM MOMENT IN PILE

ANNEX J

(*Clause* 11.2.2)

LOAD CARRYING CAPACITY OF UNDER-REAMED PILES FROM SOIL PROPERTIES

J-1 ULTIMATE LOAD CAPACITY

The ultimate load capacity of a pile can be calculated from soil properties. The soil properties required are strength parameters, cohesion, angle of internal friction and soil density.

a) *Clayey soils* – For clayey soils, the ultimate load carrying capacity of an under-reamed pile may be worked out from the following expression:

$$Q_u = A_p N_c C_p + A_a N_c C'_a + C'_a A'_s + \alpha C_a A_s$$

where

Q_u = ultimate bearing capacity of pile, in kN;

A_p = cross-sectional area of the pile stem at the pile tip, in m²;

N_c = bearing capacity factor, usually taken as 9;

C_p = cohesion of the soil around toe, in kN/m²;

A_a = $(\pi/4)(D_u^2 - D^2)$, where D_u and D are the under-reamed and stem diameter, respectively, in m;

C_a = average cohesion of the soil along the pile stem, in kN/m²;

A_s = surface area of the stem, in m²;

A'_s = surface area of the cylinder circumscribing the under-reamed bulbs, in m²;

C'_a = average cohesion of the soil around the under-reamed bulbs; and

α = reduction factor (usually taken as 0.5 for clays).

NOTES

1 The above expression holds for the usual spacing of under-reamed bulbs spaced at not more than one and a half times their diameter.

2 If the pile is with one bulb only, the third term will not occur. For calculating uplift load, the first term will not occur in the formula.

3 In case of expansive soil, top 2 m strata should be neglected for computing skin friction.

b) *Sandy soils*

$$Q_u = A_p\left(\frac{1}{2}D\cdot\gamma\cdot N_\gamma + \gamma d_f N_q\right) + A_a\left[\frac{1}{2}D_u n\gamma N_\gamma + \gamma N_q\left(\sum_{r=1}^{r=n} d_r\right)\right] + \frac{1}{2}\pi D\gamma K\tan\delta\left(d_1^2 + d_f^2 - d_n^2\right)$$

where

A_p = $\pi D^2/4$, where D is stem diameter, in m;

A_a = $\pi/4\ (D_u^2 - D^2)$ where D_u is the under-reamed bulb diameter, in m;

n = number of under-reamed bulbs;

γ = average unit weight of soil (submerged unit weight in strata below water table), in kN/m³;

N_γ, N_q = bearing capacity factors, depending upon the angle of internal friction;

d_r = depth of the centre of different under-reamed bulbs below ground level, in m;

d_f = total depth of pile below ground level, in m;

K = earth pressure coefficient (usually taken as 1.75 for sandy soils);

δ = angle of wall friction (may be taken as equal to the angle of internal friction ϕ);

d_1 = depth of the centre of the first under-reamed bulb, in m; and

d_n = depth of the centre of the last under-reamed bulb, in m.

NOTES

1 For uplift bearing on pile tip, A_p will not occur.

2 N_γ will be as specified in good practice [6-2(11)] and N_q will be taken from Fig. 11B.

c) *Soil strata having both cohesion and friction* — In soil strata having both cohesion and friction or in layered strata having two types of soil, the bearing capacity may be estimated using both the formulae. However, in such cases load test will be a better guide.

d) *Compaction piles in sandy strata* — For bored compaction piles in sandy strata, the formula in (b) shall be applied but with the modified value of ϕ_1 as given below:

$$\phi_1 = (\phi + 40)/2$$

where

ϕ = angle of internal friction of virgin soil.

The values of N_γ, N_q and d are taken corresponding to ϕ_1. The value of the earth pressure coefficient K will be 3.

e) *Piles resting on rock* — For piles resting on rock, the bearing component will be obtained by multiplying the safe bearing capacity of rock with bearing area of the pile stem plus the bearing provided by the bulb portion.

NOTE — To obtain safe load in compression and uplift from ultimate load capacity generally the factors of safety will be 2.5 and 3, respectively.

ANNEX K

(*Clause* 14.2)

SOIL IMPROVEMENT METHODS

	Summary of Soil Improvement Methods								
	Method	**Principle**	**Most Suitable Soil Conditions/ Types**	**Maximum Effective Treatment Depth**	**Special Materials Required**	**Special Equipment Required**	**Properties of Treated Material**	**Special Advantages and Limitation**	**Relative Cost**
In-Situ Deep Compaction of Cohesionless Soils	Blasting	Shock waves and vibrations cause liquefaction and displacement with settlement to higher density	Saturated, clean sands: partly saturated sands and silts (collapsible loess) after flooding	>30 m	Explosives, backfill to plug drill holes, hole casings	Jetting or drilling machine	Can obtain relative densities to 70-80, may get variable density strength gain	Rapid, inexpensive, can treat any size areas: variable properties, no improvement near surface, dangerous	Low
	Vibratory Probe	Densification by vibration; liquefaction induced settlement under overburden	Saturated or dry clean sand	20 m (Ineffective above 3-4m depth)	None	Vibratory pile driver and 750 mm dia open steel pipe	Can obtain relative densities of up to 80. Ineffective in some sands	Rapid, simple, good underwater, soft under layers may damp vibrations, difficult to penetrate, stiff over layers, not good in partly saturated soils	Moderate
	Vibro-compaction	Densification by vibration and compaction of backfill material	Cohesionless soils with less than 20 fines	30 m	Granular backfill, water supply	Vibroflot, crane, pumps	Can obtain high relative densities, good uniformity	Useful in saturated and partly saturated soils, uniformity	Moderate
In-Situ Deep compaction of Cohesionless Soils	Compaction piles	Densification by displacement of pile volume and by vibration during driving	Loose sandy soils: partly saturated clayey soils, loess	>20 m	Pile material (often sand or soil plus cement mixture)	Pile driver, special sand pile equipment	Can obtain high densities, good uniformity	Useful in soils with fines, uniform compaction, easy to check results, slow, limited improvement in upper 1-2 m	Moderate to high
	Heavy tamping (Dynamic compaction/ consolidation)	Repeated application of high intensity impacts at surface	Cohesionless soils, waste fills, partly saturated soils	30 m	None	Tampers of up to 200 tonne, high capacity crane	Can obtain good improvement and reasonable uniformity	Simple, rapid, suitable for some soils with fines; usable above and below water, requires control, shall be away from existing structures	Low

ANNEX K — (*Continued*)

	Method	Principle	Most Suitable Soil Conditions/ Types	Maximum Effective Treatment Depth	Special Materials Required	Special Equipment Required	Properties of Treated Material	Special Advantages and Limitation	Relative Cost
Injection and Grouting	Particulate grouting	Penetration grouting-fill soil pores with soil, cement, and/or clay	Medium to coarse sand and gravel	Unlimited	Grout, water	Mixers, tanks, pumps, hoses	Impervious, high strength with cement grout, eliminate liquefaction danger	Low cost grouts, high strength; limited to coarse-grained soils, hard to evaluate	Lowest of the grout systems
	Chemical grouting	Solution of two or more chemicals react in soil pores to form a gel or a solid precipitate	Medium silts and coarser	Unlimited	Grout, water	Mixers, tanks, pumps, hoses	Impervious, high strength with cement grout, eliminate liquefaction danger	Low viscosity controllable gel time, good water shut-off; high cost, hard to evaluate	High to very high
	Pressure injected lime	Lime slurry injected to shallow depths under high pressure	Expansive clays	Unlimited, but 2-3 m usual	Lime, water surfactant	Slurry tanks, agitators, pumps, hoses	Lime in capsulated zones formed by channels resulting from cracks, root holes, hydraulic fracture	Only effective in narrow range of soil conditions	Competitive with other solutions to expansive soil problems
	Displacements grout	Highly viscous grout acts as radical hydraulic jack when pumped in under high pressure	Soft, fine-grained soils; foundation soils with large voids or cavities	Unlimited, but a few metre usual	Soil, cement water	Batching equipment, high pressure pumps, hoses	Grout bulbs within compressed soil matrix	Good for correction of differential settlements, filling large voids; careful control required	Low material high injection
	Electro-kinetic injection	Stabilization chemicals moved into soil by electro-osmosis or colloids into pores by electrophoresis	Saturated silts; silty clays (clean sands in case of colloid injection)	Unknown	Chemicals stabilizer colloidal void fillers	d.c. power supply, anodes, cathodes	Increased strength, reduced compressibility reduced liquefaction potential	Existing soil and structures not subjected to high pressures; not good in soils with high conductivity	Expansive
	Jet grouting	High speed jets at depth excavate, inject, and mix stabilizer with soil to form columns or panels	Sands, silts, clays	—	Water, stabilizing chemicals	Special jet nozzle, pumps, pipes and hoses	Solidified columns and walls	Useful in soils that can't be permeation grouted, precision in locating treated zones	—

ANNEX K — (*Continued*)

	Method	Principle	Most Suitable Soil Conditions/ Types	Maximum Effective Treatment Depth	Special Materials Required	Special Equipment Required	Properties of Treated Material	Special Advantages and Limitation	Relative Cost
Precompression	Preloading with/without drain	Load is applied sufficiently in advance of construction so that compression of soft soils is completed prior to development of the site	Normally consolidated soft clays, silts, organic deposits, completed sanitary landfills	—	Earth fill or other material for loading the site; sand or gravel for drainage blanket	Earth moving equipment, large water tanks or vacuum drainage systems sometimes used; settlement markers, piezo-meters	Reduced water content and void ratio, increased strength	Easy, theory well developed, uniformity; requires long time (vertical drains can be used to reduce consolidation time)	Low (moderate, if vertical drains are required)
	Surcharge fills	Fill in excess of that required permanently is applied to achieve a given amount of settlement in a shorter time; excess fill then removed	Normally consolidated soft clays, silts, organic deposits, completed sanitary landfills	—	Earth fill or other material for loading the site; sand or gravel for drainage blanket	Earth moving equipment; settlement markers, piezometers	Reduced water content, void ratio and compressibility increased strength	Faster than preloading without surcharge, theory well developed, extra material handling; can use vertical drains to reduce consolidation time	Moderate
	Electro-osmosis	d.c. current causes water flow from anode towards cathode where it is removed	Normally consolidated silts and silty clays	—	Anodes (usually rebars or aluminium) cathodes (well points or rebars)	d.c. power supply, wiring, metering systems	Reduced water content and compressibility, increased strength, electrochemical hardening	No fill loading required, can be used in confined area, relatively fast; non-uniform properties between electrodes; not good in highly conductive soils	High

ANNEX K — (*Continued*)

	Method	Principle	Most Suitable Soil Conditions/ Types	Maximum Effective Treatment Depth	Special Materials Required	Special Equipment Required	Properties of Treated Material	Special Advantages and Limitation	Relative Cost
Admixtures	Remove and replace	Foundation soil excavated, improved by drying or admixture, and re-compacted	Inorganic soils	10 m	Admixture stabilizers	Excavating, mixing and compaction equipment, dewatering system	Increased strength and stiffness, reduced compressibility	Uniform, controlled foundation soil when replaced; may require large area dewatering	High
	Structural fills	Structural fill distributes loads to underlying soft soils	Use over soft clays or organic soils, marsh deposits	—	Sand, gravel fly ash, bottom ash, slag, expanded aggregate, clam shell or oyster shell, incinerator ash	Mixing and compaction equipment	Soft subgrade protected by structural load-bearing fill	High strength, good load distribution to underlying soft soils	Low to high
	Mix-in-place piles and walls	Lime cement or asphalt introduced through rotating auger or special in-place mixer	All soft or loose inorganic soils	>20 m	Cement lime asphalt, or chemical stabilizer	Drill rig, rotary cutting and mixing head, additive proportioning equipment	Solidified soil piles for walls of relatively high strength	Use native soil, reduced lateral support requirements during excavation; difficult quality control	Moderate to high
Thermal	Heating	Drying at low temperatures; alteration of clays at intermediate temperatures (400-600°C); fusion at high temperatures (>1 000°C)	Fine- grained soils, especially partly saturated clays and silts, loess	15 m	Fuel	Fuel tanks, burners, blowers	Reduced water content, plasticity, water sensitivity; increased strength	Can obtain irreversible improvements in properties; can introduce stabilizers with hot gases	High
	Freezing	Freeze soft, wet ground to increase its strength stiffness	All soils	Several metre	Refrigerant	Refrigeration system	Increased strength and stiffness, reduced permeability	No good in flowing ground water, temporary	High

ANNEX K — (*Concluded*)

	Method	Principle	Most Suitable Soil Conditions/ Types	Maximum Effective Treatment Depth	Special Materials Required	Special Equipment Required	Properties of Treated Material	Special Advantages and Limitation	Relative Cost
Reinforcement	Vibro replacement sand/stone columns	Hole jetted into soft, fine-grained soil and backfilled with densely compacted gravel or sand	Soft clays and alluvial deposits	20 m	Gravel or crushed rock backfill	Vibroflot, crane or vibrocat, water	Increased bearing capacity, reduced settlement	Faster than precompression, avoids dewatering required for remove and replace; limited bearing capacity	Moderate to high
	Root piles, soils nailing	Inclusions used to carry tension, shear, compression	All soils	—	Reinforcing bars, cement grout	Drilling and grouting equipment	Reinforced zone behaves as a coherent mass	*In-situ* reinforcement for soils that can't be grouted or mixed in-place with admixtures	Moderate to high
	Strips and membranes	Horizontal tensile strips, membranes buried in soil under embankments, gravel base courses and footings	All soils	Can construct earth structures to heights of several metres	Metal or plastic strips, geotextiles	Excavating, earth handling, and compaction equipment	Self-supporting earth structures, increased bearing capacity, reduced deformations	Economical, earth structures coherent, can tolerate deformations; increased allowable bearing pressure	Low to moderate

LIST OF STANDARDS

The following list records those standards which are acceptable as 'good practice' and 'accepted standards' in the fulfillment of the requirements of the Code. The latest version of a standard shall be adopted at the time of enforcement of the Code. The standards listed may be used by the Authority for conformance with the requirements of the referred clauses in the Code.

In the following list, the number appearing in the first column within parantheses indicates the number of reference in this Section.

	IS No.	*Title*
(1)	1892 : 1979	Code of practice for subsurface investigation for foundation (*first revision*)
	2131 : 1981	Method of standard penetration test for soils (*first revision*)
	2132 : 1986	Code of practice for thin walled tube sampling of soils (*second revision*)
	4434 : 1978	Code of practice for *in-situ* vane shear test for soils (*first revision*)
	4968	Method for subsurface sounding for soils
	(Part 1) : 1976	Dynamic method using 50 mm cone without bentonite slurry (*first revision*)
	(Part 2) : 1976	Dynamic method using cone and bentonite slurry (*first revision*)
	(Part 3) : 1976	Static cone penetration test (*first revision*)
	8763 : 1978	Guide for undisturbed sampling of sands and sandy soils
	9214 : 1979	Method for determination of modulus of subgrade reaction (*k*-value) of soils in the field
(2)	1892 : 1979	Code of practice for subsurface investigation for foundation (*first revision*)
(3)	10042 : 1981	Code of practice for site-investigations for foundation in gravel boulder deposits
(4)	13365 (Part 1) : 1998	Guidelines for quantitative classification systems of rock mass: Part 1 RMR for predicting of engineering properties
(5)	2720	Methods of tests for soils
	(Part 1) : 1983	Preparation of dry soil samples for various tests (*second revision*)
	(Part 2) : 1973	Determination of water content (*second revision*)
	(Part 3/Sec 1) : 1980	Determination of specific gravity, Section 1 Fine grained soils (*first revision*)
	(Part 3/Sec 2) : 1980	Determination of specific gravity, Section 2 Fine, medium and coarse grained soils (*first revision*)
	(Part 4) : 1985	Grain size analysis (*second revision*)
	(Part 5) : 1985	Determination of liquid and plastic limits (*second revision*)
	(Part 10) : 1991	Determination of unconfined compressive strength (*second revision*)
	(Part 11) : 1993	Determination of the shear strength parameters of a specimen tested in unconsolidated undrained triaxial compression without the measurement of pore water pressure(*first revision*)
	(Part 12) : 1981	Determination of shear strength parameters of soil from consolidated undrained triaxial compression test with measurement of pore water pressure (*first revision*)
	(Part 13) : 1986	Direct shear test (*second revision*)
	(Part 15) : 1986	Determination of consolidation properties (*first revision*)
	(Part 28) : 1974	Determination of dry density of soils in place, by the sand replacement method (*first revision*)
	(Part 29) : 1975	Determination of dry density of soils in place, by the core cutter method (*first revision*)
	(Part 33) : 1971	Determination of the density in-place by the ring and water replacement method
	(Part 34) : 1972	Determination of density of soils in-place by rubber-balloon method
	(Part 39/Sec 1): 1977	Direct shear test for soils containing gravel, Section 1 Laboratory test
(6)	1498 : 1970	Classification and identification of soils for general engineering purposes (*first revision*)
(7)	401 : 2001	Code of practice for preservation of timber (*fourth revision*)

	IS No.	Title
(8)	15180 : 2002	Guidelines for use in prediction of subsidence and associated parameters in coal mines having nearly horizontal single seam workings
(9)	3764 : 1992	Code of safety for excavation work (*first revision*)
(10)	1904 : 1986	Code of practice for design and construction of foundations in soils: General requirements (*third revision*)
(11)	6403 : 1981	Code of practice for determination of bearing capacity of shallow foundations (*first revision*)
(12)	1888 : 1982	Method of load tests on soils (*second revision*)
(13)	8009 (Part 1) : 1976	Code of practice for calculation of settlement of foundations: Part 1 Shallow foundations subjected to symmetrical static vertical loads
(14)	12070 : 1987	Code of practice for design and construction of shallow foundations on rocks
(15)	1080 : 1985	Code of practice for design and construction of shallow foundations in soils (other than raft, ring and shell) (*second revision*)
(16)	11089 : 1984	Code of practice for design and construction of ring foundations
(17)	9456 : 1980	Code of practice for design and construction of conical and hyperbolic paraboloidal types of shell foundations
(18)	2974 (Part 1) : 1982	Code of practice for design and construction of machine foundations: Part 1 Foundations for reciprocating type machines (*second revision*)
(19)	2911 (Part 4) : 2013	Design and construction of pile foundations — Code of practice: Part 4 Load test on piles (*second revision*)
(20)	14593 : 1998	Design and construction of bored cast *in-situ* piles founded on rocks — Guidelines
(21)	4968	Method for subsurface sounding for soils:
	(Part 1) : 1976	Dynamic method using 50 mm cone without bentonite slurry (*first revision*)
	(Part 2) : 1976	Dynamic method using cone and bentonite slurry (*first revision*)
	(Part 3) : 1976	Static cone penetration test (*first revision*)
(22)	2131 : 1981	Method for standard penetration test for soils (*first revision*)
(23)	2911	Code of practice for design and construction of pile foundations
	(Part 1/Sec 1): 2010	Concrete piles, Section 1 Driven cast *in-situ* concrete piles (*second revision*)
	(Part 1/Sec 2): 2010	Concrete piles, Section 2 Bored cast *in-situ* concrete piles (*second revision*)
(24)	14893 : 2001	Guidelines for non-destructive integrity testing of piles
(25)	2911 (Part 1/ Sec 3) : 2010	Code of practice for design and construction of pile foundations: Part 1 Concrete piles, Section 3 Precast driven concrete piles (*second revision*)
(26)	2911 (Part 1/ Sec 4) : 2010	Code of practice for design and construction of pile foundations: Part 1 Concrete piles, Section 4 Precast concrete piles in prebored holes (*first revision*)
(27)	2911 (Part 3): 1980	Code of practice for design and construction of pile foundations: Part 3 Under-reamed pile foundation (*first revision*)
(28)	2911 (Part 2): 1980	Code of practice for design and construction of pile foundations: Part 2 Timber piles (*first revision*)
(29)	2974	Code of practice for design and construction of machine foundation
	(Part 1) : 1982	Foundations for reciprocating type machine (*second revision*)
	(Part 2) : 1980	Foundations for impact type machines (hammer foundations) (*first revision*)
	(Part 3) : 1992	Foundations for rotary type machines (medium and high frequency) (*second revision*)
	(Part 4) : 1979	Foundations for rotary type machines of low frequency (*first revision*)

	IS No.	Title
	(Part 5) : 1987	Foundations for impact machines other than hammers (forging and stamping press; pig breakers, drop crusher and jetter) (*first revision*)
	13301 : 1992	Guidelines for vibration isolation for machine foundations
	9556 : 1980	Code of practice for design and construction of diaphragm walls
(30)	13094 : 1992	Guidelines for selection of ground improvement techniques for foundation in weak soils
(31)	15284 (Part 1) : 2003	Design and construction for ground improvement — Guidelines: Part 1 Stone columns
(32)	15284 (Part 2) : 2004	Design and construction for ground improvement — Guidelines: Part 2 Preconsolidation using vertical drains
(33)	13162 (Part 2) : 1991	Geotextiles – Methods of test: Part 2 Determination of resistance to exposure of ultra-violet light and water (Xenon arc type apparatus)
	13321 (Part 1) : 1992	Glossary of terms for geo-synthetics: Part 1 Terms used in materials and properties
	13325 : 1992	Method of test for the determination of tensile properties of extruded polymer geogrids using the wide strip
	13326 (Part 1) : 1992	Method of test for the evaluation of interface friction between geosynthetics and soil: Part 1 Modified direct shear technique
	14293 : 1995	Geotextiles — Method of test
	14294 : 1995	Geotextiles — Method for determination of apparent opening size by dry sieving technique
	14324 : 1995	Geotextiles - Methods of test for determination of water permeability-permittivity
	14706 : 1999	Geotextiles — Sampling and preparation of test specimens
	14714 : 1999	Geotextiles — Determination of abrasion resistance
	14715 : 2000	Woven jute geotextiles — Specification
	14716 : 1999	Geotextiles — Determination of mass per unit area
	14739 : 1999	Geotextiles — Methods for determination of creep
	14986 : 2001	Guidelines for application of jute geo-grid for rain water erosion control in road and railway embankments and hill slopes
	15060 : 2001	Geotextiles — Tensile test for joints/seams by wide width method
(34)	2720 (Part 11) : 1993	Methods of tests for soils Determination of the shear strength parameters of a specimen tested in unconsolidated undrained triaxial compression without the measurement of pore water pressure (*first revision*)
	(Part 12) : 1981	Determination of shear strength parameters of soil from consolidated undrained triaxial compression test with measurement of pore water pressure (*first revision*)
(35)	9214 : 1979	Method of determination of subgrade reaction (*K* value) of soils in the

NATIONAL BUILDING CODE OF INDIA

PART 6 STRUCTURAL DESIGN

Section 3 Timber and Bamboo: 3A Timber

BUREAU OF INDIAN STANDARDS

CONTENTS

FOREWORD ... 3
1 SCOPE ... 5
2 TERMINOLOGY ... 5
3 SYMBOLS ... 7
4 MATERIALS ... 8
5 PERMISSIBLE STRESSES ... 19
6 DESIGN CONSIDERATIONS ... 20
7 DESIGN OF COMMON STEEL WIRE NAIL JOINTS ... 25
8 DESIGN OF NAIL LAMINATED TIMBER BEAMS ... 30
9 DESIGN OF BOLTED CONSTRUCTION JOINTS ... 32
10 DESIGN OF TIMBER CONNECTOR JOINTS ... 34
11 GLUED LAMINATED CONSTRUCTION ... 37
12 LAMINATED VENEER LUMBER ... 40
13 GLUED FINGER JOINTS ... 41
14 STRUCTURAL USE OF PLYWOOD ... 42
15 TRUSSED RAFTER ... 42
16 STRUCTURAL SANDWICHES ... 45
17 LAMELLA ROOFING ... 47
18 NAIL AND SCREW HOLDING POWER OF TIMBER ... 53
19 PROTECTION AGAINST TERMITE ATTACK IN BUILDINGS ... 53
LIST OF STANDARDS ... 56

FOREWORD

This Code (Part 6/Subsection 3A) deals with the structural design aspect of timber structures. In this Subsection, the various species of Indian timber, classified into three groups depending on the structural properties influencing the design most, are included.

This Section was first published in 1970 which was subsequently revised in 1983 and 2005. In the 1983 version of the Code, timber was covered under Section 3 of Part 6 under the title 'Wood', which did not cover bamboo. In the last version of 2005, the scope of Section 3 was enlarged as Section 3 Timber and Bamboo, which was subdivided into Subsection 3A 'Timber' and Subsection 3B 'Bamboo'. This Subsection pertains to 3A Timber.

In the first revision of 1983, provisions of this Subsection were updated and design of nailed laminated timber beams, were included and information on bolted construction joints was added. In the second revision of 2005, a number of terminologies related to timber for structural purpose were added, strength data of additional species of timber were included, requirements for structural timber and preferred cut sizes thereof were modified, requirements for glued laminated construction and finger joints and also for laminated veneer lumber were introduced. Brief details were included for structural sandwiches, glued laminated beams, lamella roofing, nail and screw holding power of timber, structural use of plywood and trussed rafter. Further, guidelines for protection against termite attack in buildings were also incorporated in the last revision of this Subsection. Also, keeping into consideration the dwindling forest resources, brief details on use of plantation timbers including certain fast growing species and suitable guidelines in terms of their seasoning, sawing, treatment, etc and also use of finger jointing and glued laminated timber was introduced in the last revision so as to effect judicious use of timber.

As a result of experience gained in implementation of 2005 version of this Code and feedback received as well as formulation of new standards in the field and revision/ updation of some of the existing standards, a need to revise this Subsection was felt. This revision has, therefore, been brought out to take care of these aspects.

The significant changes incorporated in this revision include the following:

a) Definitions of various terms have been modified as per the prevailing engineering practice and new terminologies relating to timber for structural use have been added.

b) The permissible lateral strength (in double shear) of mild steel common wire for different new species of timber have been added and also strength values for some of the existing species have been modified based on latest research.

c) Guidance on increase in permissible lateral strength for mild steel nails clenched across the grains over nails with points cut flush, has been included.

d) Design provisions for timber connector joints have been further updated.

e) Data on block shear test results of glued timber joints based on the indigenous work, has been included.

f) Data on strength properties of glued finger joints based on the indigenous work, has been included for information and guidance in design.

g) A new figure has been added for possible orientation of planks in glue laminated beams (Glulam). Also, design outline for horizontally laminated beams has been added.

h) Design provisions for trussed rafters have been further updated and also some design data on the lateral load bearing strength of common wire nails in plywood-to-wood joints have been included for guidance in design.

j) Design provisions for lamella roofing have been updated and detailed.

k) Composite nail and screw holding power of some Indian timbers has been provided for guidance in design.

m) Reference to all the concerned Indian Standards have been updated.

The information contained in this Subsection is largely based on the following Indian Standards:

IS 399 : 1963	Classification of commercial timbers and their zonal distribution (*revised*)
IS 883 : 2016	Code of practice for design of structural timber in building (*fifth revision*)
IS 1150 : 2000	Trade names and abbreviated symbols for timber species (*third revision*)
IS 2366 : 1983	Code of practice for nail-jointed timber construction (*first revision*)
IS 4891 : 1988	Specification for preferred cut sizes of structural timber (*first revision*)
IS 4983 : 1968	Code of practice for design and construction of nailed laminated timber beams
IS 11096 : 1984	Code of practice for design and construction of bolt-jointed timber construction
IS 14616 : 1999	Specification for laminated veneer lumber

All standards, whether given herein above or cross-referred to in the main text of this Subsection, are subject to revision. The parties to agreement based on this Subsection are encouraged to investigate the possibility of applying the most recent editions of the standards.

For the purpose of deciding whether a particular requirement of this Subsection is complied with, the final value, observed or calculated, expressing the result of a test or analysis, shall be rounded off in accordance with IS 2 : 1960 'Rules for rounding off numerical values (*revised*)'. The number of significant places retained in the rounded off value should be the same as that of the specified value in this Subsection.

NATIONAL BUILDING CODE OF INDIA

PART 6 STRUCTURAL DESIGN

Section 3 Timber and Bamboo: 3A Timber

1 SCOPE

1.1 This Code (Part 6/Subsection 3A) covers the general principles involved in the design of structural timber in buildings, including elements of structures connected together by fasteners/fastening techniques.

1.2 This shall not be interpreted to prevent the use of material or methods of design or construction not specifically mentioned herein; and the methods of design may be based on analytical and engineering principles, or reliable test data, or both, that demonstrate the safety and serviceability of the resulting structure. The classification of timber into strength groups should not be interpreted as preventing the use of design data desired for a particular timber or grade of timber on the basis of reliable tests.

2 TERMINOLOGY

For the purpose of this Subsection, the following definitions shall apply, and for other terms those given in the accepted standard [6-3A(1)] shall apply.

2.1 Structural Purpose Definitions

2.1.1 *Beam, Built-Up Laminated* — A beam made by joining layers of timber together with mechanical fastenings, so that the grain of all layers is essentially parallel.

2.1.2 *Beam, Glued-Laminated* — A beam made by bonding layers of veneers or timber with an adhesive, so that grain of all laminations is essentially parallel.

2.1.3 *Bressummer* — A beam, across broad opening, sustaining super structure.

2.1.4 *Diaphragm, Structural* — A structural element of large extent placed in a building as a wall, or roof, and made use of to resist horizontal forces such as wind or earthquakes-acting parallel to its own plane.

2.1.5 *Duration of Load* — Period during which a member or a complete structure is stressed as a consequence of the loads applied.

NOTE — Timber is stronger under loads of brief duration than under permanently applied loads.

2.1.6 *Edge Distance* — The distance measured perpendicular to grain from the centre of the connector to the edge of the member.

2.1.7 *End Distance* — The distance measured parallel to grain of the member from the centre of the connector to the closest end of timber.

2.1.8 *Finger Joint* — End joint formed by machining a number of similar, tapered, symmetrical fingers in the ends of timber member, which are then bonded together.

2.1.9 *Finger Jointed Timber* — Timber containing adhesively bonded finger joints spaced at manufacturers specified minimum spacing.

2.1.10 *Fundamental or Ultimate Stress* — The stress which is determined on small clear specimen of timber, in accordance with accepted standards [6-3A(2)]; and does not take into account the effect of naturally occurring characteristics and other factors.

2.1.11 *Glue* — A substance capable of holding materials together by surface attachment.

2.1.12 *Glued Laminated (Glulam)* — A wood structural element comprising of sawn wood lamination bonded together with adhesives and in which the grains of all laminations are parallel longitudinally.

2.1.12.1 *Glued laminated, horizontally* — Glued laminated timber where gluing planes are perpendicular to the largest dimension of the transverse section, that is, in cross-wise direction.

2.1.12.2 *Glued laminated, vertically* — Glued laminated timber where gluing planes are perpendicular to the smallest dimension of the transverse section.

2.1.13 *Inside Location* — Position in buildings in which timber remains continuously dry or protected from weather.

2.1.14 *Isoptera* — An order of social insects consisting of the termites.

2.1.15 *Lamella Roof* — A roof or frame, made up of relatively short members, called lamellas, forming a network of framing timbers. This network forms a barrel-like structure of mutually braced and stiffened units, arching over the building between supports, and together with the sheathing forms a diaphragm for resistance of vertical and lateral loads.

2.1.16 *Laminations* — Thin elements of wood of appreciable width and length which, when superimposed on each other and fastened together with their grains essentially parallel make up cross section of considerable depth or width.

2.1.17 *Laminated Veneer Lumber* — A structural composite made by laminating veneers, 1.5 to 4.2 mm thick, with suitable adhesive and with the grain of

veneers in successive layers aligned along the longitudinal (length) dimension of the composite.

2.1.18 *Latewood* — The portion of the wood that is formed in the later part of growth season and consists of thicker walled cells.

2.1.19 *Loaded Edge Distance* — The distance measured from the centre to the edge towards which the load induced by the connector acts, and the unloaded edge distance is the one opposite to the loaded edge.

2.1.20 *Location* — A term generally referred to as exact place where a timber is used in building.

2.1.21 *Mechanically Laminated* — A wood structural element comprising of laminations which are not glued but which are held together with mechanical fastenings such as nails or bolts and in which all laminations have the grains approximately parallel longitudinally.

2.1.22 *Outside Location* — Position in buildings in which timbers are occasionally subjected to wetting and drying as in the case of open sheds and outdoor exposed structures.

2.1.23 *Permissible Stress* — Stress obtained by applying factor of safety to the ultimate stress.

2.1.24 *Sandwich, Structural* — A layered construction comprising a combination or relatively high-strength facing material intimately bonded to and acting integrally with a low density core material.

2.1.25 *Spaced Column* — Two column sections adequately connected together by glue, bolts, screws or otherwise.

2.1.26 *Stressed Skin* — A form of construction in which the outer skin, in addition to its normal functioning of providing a surface covering, acts integrally with the framing members contributing to the strength of the unit as a whole.

2.1.27 *Structure, Permanent* — Structural units in timber which are constructed for a long duration and wherein adequate protection and design measures have initially been incorporated to render the structure serviceable for the required life.

2.1.28 *Structure, Temporary* — Structures which are erected for a short period, such as hutments at project sites, for rehabilitation, temporary defence constructions, exhibition structures, etc.

2.1.29 *Structural Element* — The component timber members and joints which make up a resulting structural assembly.

2.1.30 *Structural Grades* — Grades defining the maximum size of strength reducing natural characteristics (knots, sloping grain, etc) deemed permissible in any piece of structural timber within designated structural grade classification.

2.1.31 *Structural Timber* — Timber in which strength is related to the anticipated in-service use as a controlling factor in grading and selection and/or stiffness.

2.1.32 *Stud* — One of a series of slender wood structural members placed vertically as supporting members in a wall partition, or similar structural unit.

2.1.33 *Termite* — An insect of the order *Isoptera* which may burrow in the wood or wood products of a building for food or shelter.

2.1.34 *Wet Location* — Position in buildings in which timbers are almost continuously damp or wet in contact with the earth or water, such as piles and timber foundations.

2.2 Definitions of Defects in Timber

2.2.1 *Check* — A separation of fibres extending along the grain which is confined to one face of a piece of wood.

2.2.2 *Compression Wood* — Abnormal wood which is formed on the lower sides of branches and inclined stems of coniferous trees. It is darker and harder than normal wood but relatively low in strength for its weight. It can be usually identified by wide eccentric growth rings with abnormally high proportion of growth latewood.

2.2.3 *Dead Knot* — A knot in which the layers of annual growth are not completely intergrown with those of the adjacent wood. It is surrounded by pitch or bark. The encasement may be partial or complete.

2.2.4 *Decay or Rot* — Disintegration of wood tissue caused by fungi (wood destroying) or other micro-organisms.

2.2.5 *Decayed Knot* — A knot softer than the surrounding wood and containing decay.

2.2.6 *Diameter of Knot* — The maximum distance between the two points farthest apart on the periphery of a round knot, on the face on which it becomes visible. In the case of a spike or a splay knot, the maximum width of the knot visible on the face on which it appears shall be taken as its diameter.

2.2.7 *Discolouration* — A change from the normal colour of the wood which does not impair the strength of the wood.

2.2.8 *Knot* — A branch base or limb embedded in the tree or timber by natural growth.

2.2.9 *Knot Hole* — A hole left as a result of the removal of a knot.

2.2.10 *Live Knot* — A knot free from decay and other defects, in which the fibres are firmly intergrown with those of the surrounding wood. Syn. 'Intergrown Knot'; cf. 'Dead Knot'.

2.2.11 *Loose Grain (Loosened Grain)* — A defect on a flat sawn surface caused by the separation or raising of wood fibres along the growth rings; cf. 'Raised Grain'.

2.2.12 *Loose Knot* — A knot that is not held firmly in place by growth or position, and that cannot be relied upon to remain in place; cf. 'Tight Knot'.

2.2.13 *Mould* — A soft vegetative growth that forms on wood in damp, stagnant atmosphere. It is the least harmful type of fungus, usually confined to the surface of the wood.

2.2.14 *Pitch Pocket* — Accumulation of resin between growth rings of coniferous wood as seen on the cross-section.

2.2.15 *Sap Stain* — Discolouration of the sapwood mainly due to fungi.

2.2.16 *Sapwood* — The outer layer of log, which in the growing tree contain living cells and food material: The sapwood is usually lighter in colour and is readily attacked by insects and fungi.

2.2.17 *Shake* — A partial or complete separation between adjoining layers of tissues as seen in end surfaces.

2.2.18 *Slope of Grain* — The inclination of the fibres to the longitudinal axis of the member.

2.2.19 *Sound Knot* — A tight knot free from decay, which is solid across its face, and at least as hard as the surrounding wood.

2.2.20 *Split* — A crack extending from one face of a piece of wood to another and runs along the grain of the piece.

2.2.21 *Tight Knot* — A knot so held by growth or position as to remain firm in position in the piece of wood; cf. 'Loose Knot'.

2.2.22 *Wane* — The original rounded surface of a tree remaining on a piece of converted timber.

2.2.23 *Warp* — A deviation in sawn timber from a true plane surface or distortion due to stresses causing departure from a true plane.

2.2.24 *Worm Holes* — Cavities caused by worms.

3 SYMBOLS

For the purpose of this Subsection, the following letter symbols shall have the meaning indicated against each:

a = projected area of bolt in main member ($t' \times d_3$), mm^2

B = width of the beam, mm

C = concentrated load, N

D = depth of beam, mm

D_1 = depth of beam at the notch, mm

D_2 = depth of notch, mm

d = dimension of least side of column, mm

d_1 = least overall width of box column, mm

d_2 = least overall dimension of core in box column, mm

d_3 = diameter of bolt, mm

d_f = bolt-diameter factor

e = length of the notch measured along the beam span from the inner edge of the support to the farthest edge of the notch, mm

E = modulus of elasticity in bending, N/mm^2

F = load acting on a bolt at an angle to grain, N

f_{ab} = calculated bending stress in extreme fibre, N/mm^2

f_{ac} = calculated average axial compressive stress, N/mm^2

f_{at} = calculated axial tensile stress, N/mm^2

f_b = permissible bending stress on the extreme fibre, N/mm^2

f_c = permissible stress in axial compression, N/mm^2

f_{cn} = permissible stress in compression normal (perpendicular) to grain, N/mm^2

f_{cp} = permissible stress in compression parallel to grain, N/mm^2

$f_{c\theta}$ = permissible compressive stress in the direction of the line of action of the load, N/mm^2

f_t = permissible stress in tension parallel to grain, N/mm^2 [extreme fibre stress in bending-tension (f_b) is safe practical estimate of tensile strength due to mode of failure in beams]

H = horizontal shear stress, N/mm^2

I = moment of inertia of a section, mm^4

K = Coefficient in deflection depending upon type and criticality of loading on beam

K_1 = modification factor for change in slope of grain

K_2 = modification factor for change in duration of loadings

K_3, K_4, K_5, K_6 = form factors

K_7 = modification factor for bearing stress

K_8 = constant equal to $0.584\sqrt{\frac{E}{f_{cp}}}$

K_9 = constant equal to $\frac{\pi}{2}\sqrt{\frac{UE}{5q\ f_{cp}}}$

K_{10} = constant equal to $0.584\sqrt{\frac{2.5E}{f_{cp}}}$

ℓ or L = span of a beam or truss, mm

M = maximum bending moment in beam, N-mm

N = total number of bolts in the joint

n = shank diameter of the nail, mm

P = load on bolt parallel to grain, N

p_1 = ratio of the thickness of the compression flange to the depth of the beam

Q = static moment of area above or below the neutral axis about neutral axis, mm^3

q = constant for particular thickness of plank

q_1 = ratio of the total thickness of web or webs to the overall width of the beam

R = load on bolt perpendicular (normal) to grain, N

S = unsupported overall length of column, mm

t = nominal thickness of planks used in forming box type column, mm

t' = thickness of main member, mm

U = constant for a particular thickness of the plank

V = vertical end reaction or shear at a section, N

W = total uniform load, N

x = distance from reaction to load, mm

y = factor determining the value of form factor K_4

δ = deflection at middle of beam, mm

θ = angle of load to grain direction

Z = section modulus of beam, mm^3

λ_1 = percentage factor for t'/d_3 ratio, parallel to grain

λ_2 = percentage factor for t'/d_3 ratio, perpendicular to grain

4 MATERIALS

4.1 Species of Timber

The species of timber recommended for structural purposes are given in Table 1.

4.1.1 *Grouping*

Species of timber recommended for constructional purposes are classified in three groups on the basis of their strength properties, namely, modulus of elasticity (E) and extreme fibre stress in bending-tension (f_b).

The characteristics of these groups are as given below:

a) *Group A* — E above 12.6 kN/mm² and f_b above 18.0 N/mm².

b) *Group B* — E above 9.8 kN/mm² and up to 12.6 kN/mm² and f_b above 12.0 N/mm² and up to 18.0 N/mm².

c) *Group C* — E above 5.6 kN/mm² and up to 9.8 kN/mm² and f_b above 8.5 N/mm² and up to 12.0 N/mm².

NOTE — Modulus of elasticity given above is applicable for all locations and extreme fibre stress in bending is for inside location.

4.1.2 Timber species may be identified in accordance with good practice [6-3A(3)].

4.2 The general characteristics like durability, treatability and seasoning of the species are also given in Table 1. Species of timber other than those recommended in Table 1 may be used, provided the basic strength properties are determined and found in accordance with **4.1.1**.

NOTE — For obtaining basic stress figures of the unlisted species, reference may be made to the Forest Research Institute, Dehra Dun.

4.3 The permissible lateral strength (in double shear) of mild steel common wire nail shall be as given in Table 2 and Table 3 for different species of timber.

4.4 Moisture Content in Timber

The permissible moisture content of timber for various positions in buildings shall be as given in Table 4.

Table 1 Safe Permissible Stresses for the Species of Timber

[*Clauses* 4.1, 4.2, 4.7.1.3(b), 5.4.1, 5.4.2 *and* 6.5.8.3.1(b)]

Species		Locality from where Tested	Average Density at 12 Percent Moisture Content Kg/m³	Modulus of Elasticity (All Grades and All Locations) × 10³ N/mm²	Permissible Stress for Grade I N/mm²											Preservative Characters		3)Refracteriness to Air Seasoning
					Bending-Tension Along Grain, Extreme Fibre Stress			Shear all Locations		Compression Parallel to Grain			Compression Perpendicular to Grain			1)Durability Class	2)Treatability Grade	
Botanical Name	Trade Name				Inside Location	Outside Location	Wet Location	Horizontal	Along Grain	Inside Location	Outside Location	Wet Location	Inside Location	Outside Location	Wet Location			
(1)	(2)	(3)	(4)	(5)	(6)	(7)	(8)	(9)	(10)	(11)	(12)	(13)	(14)	(15)	(16)	(17)	(18)	(19)
GROUP A																		
Acacia catectou	Khair (KHA)	U.P.	1 009	13.44	20.1	16.8	13.4	1.6	2.2	13.8	12.3	10.1	7.7	6.0	4.9	I	—	A
Acacia chundra	Red kutch	M.P.	1 086	16.79	26.5	22.0	17.6	2.2	3.2	17.9	15.9	13.0	10.9	8.4	6.9	—	—	A
Albizia odoratissima	Kala siris (KSI)	Chennai	737	13.54	18.7	15.6	12.5	1.5	2.2	13.3	11.8	9.6	7.3	5.6	4.6	I	e	B
Bruguiera spp.	Bruguiera (BSV) (Mangrove)	Andmans	897	17.68	21.9	18.3	14.6	1.2	1.7	14.3	12.7	10.4	5.5	4.3	3.5	III	—	—
Grewia tiliifolia	Dhaman (DHA)	Chennai	788	14.82	18.3	15.2	12.2	1.3	1.9	12.0	10.7	8.7	6.0	4.7	3.8	III	d	B
Hopea utilis (Balanocarpus utilis)	Karung	Chennai	987	16.91	25.1	20.9	16.7	1.5	2.2	16.4	14.6	11.9	9.3	7.3	5.9	—	—	—
Hopea glabra	Hopea (HOP)	Chennai	1 081	14.79	21.3	17.8	14.2	1.5	2.2	14.5	12.9	10.6	9.9	7.7	6.3	I	—	A
Hopea parviflora	Hopea (HOP)	Chennai	923	13.03	18.6	15.5	12.4	1.3	1.8	13.2	11.8	9.6	9.2	7.3	6.0	I	e	A
Manilota polyandra (Syn. Cynometra polyandra)	Ping (PIG)	Assam	903	13.20	19.1	15.9	12.7	1.3	1.8	1.2	10.4	8.5	5.7	4.4	3.6	III	b	A
Mesua ferrea	Mesua (MES)	Assam	965	16.30	23.3	19.4	15.5	1.2	1.8	15.5	13.8	11.3	5.9	4.6	3.7	I	—	A
Mimusops littoralis	Bullet-wood (BUL)	S.Andaman	1 103	17.39	22.7	18.9	15.1	1.5	2.1	14.2	12.7	10.4	11.3	8.8	7.2	I	—	A
Pesciloneuron indicum	Ballagi (BAL)	Chennai	1 139	16.29	22.4	18.7	15.0	1.5	2.2	14.7	13.1	10.7	8.7	6.8	5.5	I	e	A
Pterocarpus Scantalinus	Red sanders (MA)	Chennai	1 121	12.73	25.0	20.9	16.7	1.7	2.5	18.1	16.1	13.2	11.8	9.2	7.5	—	—	A
Sageraea elliptica	Chooi (COC)	Andmans	869	15.06	21.5	17.9	14.3	1.1	1.5	12.5	11.1	9.1	5.3	4.1	3.4	—	—	A
Stereospermun celonoides	Padri (PAD)	Chennai	731	12.94	19.0	15.8	12.7	1.1	1.6	11.9	10.6	8.7	4.0	3.1	2.6	III	—	B
Vitex altissima	Milla (MIL)	Maharashtra	937	13.01	18.2	15.2	12.1	1.2	1.7	12.6	11.2	9.2	9.5	7.4	6.1	I	c	A
GROUP B																		
Albizzia lebbeck	Kokko (KOK)	Andaman	642	11.17	13.4	11.2	9.0	1.1	1.5	9.0	8.0	6.5	4.4	3.4	2.8	I	e	B
Anogeissus latifolia	Dhaura, Axle wood (AXL) (Bakli)	U.P.	892	10.55	16.1	13.4	10.7	1.1	1.6	9.1	8.1	6.6	4.7	3.7	3.0	I	e	A
Artocarpus hirsulus	Aini (AIH)	Chennai	600	10.45	15.0	12.5	10.0	0.7	1.1	10.4	9.2	7.5	3.3	2.6	2.1	I	—	B
Acacia nilotica	Babul (BAB)	U.P.	797	—	—	12.9	10.3	1.4	2.1	8.9	7.9	6.4	5.2	4.0	3.3	I	b	B
Acacia ferruginea	Safed khair	Maharashtra	993	12.28	23.0	19.2	15.3	1.7	2.4	13.9	12.4	10.1	9.9	7.7	6.3	—	—	—
Acrocarpus fraxinifolius	Mundani (MUN)	Chennai	690	12.59	16.1	13.4	10.8	1.2	1.8	10.5	9.4	7.7	4.6	3.6	2.9	III	c	B
Aglaia odulis	Aglaia (AGL)	Assam	815	12.56	18.2	15.2	12.1	1.4	2.0	10.1	8.9	7.3	4.4	3.4	2.8	—	—	A
Anogeissus acuminota	Yon	Orissa	844	11.67	17.6	14.7	11.7	1.3	1.8	10.8	9.6	7.9	5.1	4.0	3.3	—	—	A

Table 1 — (*Continued*)

(1)	(2)	(3)	(4)	(5)	(6)	(7)	(8)	(9)	(10)	(11)	(12)	(13)	(14)	(15)	(16)	(17)	(18)	(19)
Atalanlia monophylla	Jungli—niinbu (JHI)	Orissa	897	10.31	16.7	13.9	11.1	1.5	2.1	11.3	10.0	8.2	6.3	4.9	4.0	—	—	—
Altingia excelsa	Jutili (JUT)	Assam	795	11.37	17.1	14.3	11.4	1.2	1.8	11.0	9.8	8.0	6.8	5.3	4.4	11	e	A
Amoora spp.	Amari (AMA)	W. Bengal	625	1.05	13.4	1.1	9.2	0.9	1.3	8.4	7.4	6.0	3.7	2.9	2.4	II	d	B
Bucklandia populnea (Syn Exbucklandia populnea)	Pipli (PIP)	W.Bengal	672	9.89	12.8	10.7	8.6	1.1	1.5	7.9	7.0	5.7	3.5	2.7	2.2	III	e	C
Cassia fistula	Amaltas (AMT)	U.P.	865	11.80	19.2	16.0	12.8	1.4	2.0	12.3	10.9	8.9	7.2	5.6	4.6	1	—	A
Carallia lucida	Maniawaga	Assam	748	12.60	18.4	15.3	12.3	1.2	1.7	11.4	10.1	8.3	5.9	4.6	3.8	—	—	—
Canarium strictum	Dhup	Chennai	655	11.86	13.3	11.1	8.9	0.9	1.2	8.1	7.2	5.9	2.8	2.2	1.8	III	—	C
Cassia sienea	Kasod	M.P.	820	10.50	15.4	12.8	10.9	1.0	1.4	10.8	9.6	7.9	5.5	4.3	3.5	—	—	—
Casuerina equisetifolia	Casuarina (CAS)	Orissa	769	11.44	14.6	12.2	9.8	1.3	1.8	8.2	7.3	5.9	4.0	3.1	2.5	III	e	A
Celophyllum temculosum	Poon (POO)	Maharashtra	657	9.77	13.4	11.2	9.0	0.8	1.1	8.6	7.7	6.3	2.8	2.2	1.8	11	—	B
Chloroxylon swielcnia	Satin wood (CFI)	M.P.	865	11.69	18.2	15.1	12.1	1.4	2.0	10.9	9.7	8.0	6.3	4.9	4.0	III	—	A
Cullenia resayoana (Syn C. execelsa)	Karani (KAP)	Chennai	625	12.43	14.7	12.3	9.8	0.6	0.9	9.0	8.0	6.6	2.7	2.1	1.7	III	b	C
Diploknema butyracea (Syn Bassia butyrance)	Hill mahua (HMA)	S.Andaman	780	10.64	15.3	12.8	10.2	1.0	1.5	9.9	8.8	7.2	6.6	5.2	4.2	—	—	—
Dyscxylum malebaricum	White cedа (WCE)	Chennai	745	10.92	13.2	11.0	8.8	1.0	1.4	8.0	7.1	5.8	3.1	2.4	1.9	1	—	B
Dipterocarpus grandiflorus	Gurjan (GUR)	N.Andaman	758	11.71	12.5	10.5	8.4	0.8	1.1	7.9	7.1	5.8	2.7	2.1	1.7	1	—	B
Dipterocarpus macrocarpus	Hollong (HOL)	Assam	726	13.34	14.5	12.0	9.6	0.8	1.1	8.8	7.9	6.4	3.5	2.7	2.2	III	a	B
Dichopsis polyantha (Syn Palaquium polyanthum)	Tali (TAL)	Assam	734	11.24	14.9	12.4	10.0	1.1	1.6	9.9	8.8	7.2	4.7	3.7	3.0	—	—	B
Dichopsis elliptica (Syn Palaquium ellipticum)	Pali (PAL)	Chennai	606	11.86	13.9	11.6	9.3	0.7	1.0	8.5	7.5	6.2	2.9	2.2	1.8	1	e	B
Diospyros micropylla	Ebony (EBO)	Maharashtra	776	12.15	14.2	11.9	9.5	0.9	1.3	8.3	7.3	6.0	3.3	2.6	2.1	—	—	A
Diospyros pyrrhocarpus	Ebony (EBO)	N.Andaman	843	9.93	13.5	11.2	9.0	1.0	1.4	7.9	7.0	5.7	4.0	3.1	2.5	III	—	A
Dipterocarpus bourdilloni	Gurjan (GUR)	Kerala	699	12.71	13.6	11.3	9.0	0.7	1.0	7.8	6.9	5.7	2.5	1.9	1.6	—	—	B
Eucalyptus globulus	Eucalyptus (Blue gum) (BLN)	Chennai	912	14.83	15.9	13.2	10.6	10.3	1.5	9.0	8.0	6.5	3.4	2.6	2.1	1	e	A
Eucalyptus ougenioides	Eucalyptus	Chennai	853	11.47	16.4	13.6	10.9	1.2	1.7	11.3	10.0	8.2	7.6	5.9	4.8	—	—	—
Eugenia gardnery	Jaman (JAM)	Chennai	952	11.94	14.8	12.3	9.8	1.1	1.6	9.2	8.2	6.7	5.8	4.5	3.7	III	d	—
Eugenia jambolana	Jaman (JAM)	U.P.	778	10.94	16.0	13.3	10.6	1.2	1.7	9.7	8.6	7.1	4.7	3.7	3.0			
Gluta travancorice	Gluta (GLU)	Chennai	726	12.73	13.5	11.3	9.0	0.9	1.3	9.0	8.0	6.6	4.0	3.1	2.5	1	—	A
Grewia veslita	Dhaman (DHA)	W.Bengal	758	12.00	15.4	12.6	10.3	1.4	2.0	9.1	8.1	6.6	4.1	3.2	2.6	III	d	B
Heritiera spp.	Sundri (SUN)	Assam	872	13.37	17.9	14.9	11.9	1.3	1.8	11.0	9.8	8.0	6.5	5.0	4.1	1	—	A
Kingiodendron pinnatum (Syn Hardwickia pinnata)	Piney (PIN)	Chennai	617	10.62	13.2	11.0	8.8	0.4	1.3	8.2	7.3	6.0	2.9	2.2	1.8	—	—	B
Kayea floribund	Karal	Assam	813	10.88	16.8	14.0	1.1	1.1	1.6	10.1	9.0	7.3	4.4	3.4	2.8	III	—	—
Lagerstromia lanceolata	Benteak (BEN)	Chennai	617	10.76	12.7	10.6	8.5	0.8	1.2	8.2	7.3	5.9	3.4	2.6	2.2	1	e	B
Lagerstromia parviflora	Lendi (LEN)	U.P.	734	10.97	14.3	11.9	9.5	1.1	1.6	8.7	7.7	6.3	3.7	2.9	2.4	I	e	A
Mimusops elengi	Bakul (BKL)	Chennai	885	12.39	17.3	14.4	11.5	1.3	1.8	11.0	9.8	8.0	5.6	4.3	3.6	1	—	A
Machilus macrantha	Machilus (MAC)	W.Bengal	692	10.00	12.4	10.3	8.3	1.0	1.5	8.2	7.3	6.0	3.5	2.7	2.2	III	e	B/C
Miliuse tyomentosa (Syn Saccopapetalum tomentosum)	Hoom (HOO)	Maharashtra	745	11.06	14.8	12.3	9.9	0.9	1.3	9.7	8.6	7.0	3.5	2.7	2.2	III	—	B
Pommetia pinnata	—	Andaman	788	12.90	14.3	11.9	9.5	1.1	1.6	9.1	8.0	6.6	4.0	3.1	2.5	—	—	—
Pterocarpus dolbergioides	Padauk (PAD)	N.Andaman	721	11.24	17.1	14.3	11.4	1.0	1.5	12.0	10.7	8.7	5.5	4.3	3.5	I	c	B
Mesua assamica	Kayea	Assam	842	12.83	17.4	14.5	11.6	1.0	1.4	11.7	10.4	8.5	5.3	4.1	3.3	11	e	—
Pterocarpus marsupium	Bijasal (BIJ)	Maharashtra	803	10.25	14.9	12.4	9.9	0.9	1.3	9.1	8.1	6.6	4.1	3.2	2.6	1	e	B
Fraxlnus macrantha	Ash (ASH)	U.P.	712	10.69	15.0	12.5	10.0	1.2	1.7	8.5	7.6	6.2	4.3	3.3	2.7	III	—	B
Fraxlnus execlsior	Ash (ASH)	Punjab	719	10.41	14.8	12.3	9.8	1.2	1.7	8.1	7.2	5.8	3.3	2.6	2.1	III	—	B
Planchonia valida (Syn P. andamanica)	Red bombwe (RBO)	Andaman	913	13.10	16.1	13.4	10.7	1.0	1.4	10.8	9.6	7.9	4.9	3.8	3.1	III	—	—

Table 1 — (*Continued*)

(1)	(2)	(3)	(4)	(5)	(6)	(7)	(8)	(9)	(10)	(11)	(12)	(13)	(14)	(15)	(16)	(17)	(18)	(19)
Quercus lamellosa	Oak	W.Bengal	87	12.44	14.5	12.1	9.7	1.2	1.7	8.7	7.8	6.4	3.8	2.9	2.4	II	c	A
Quercus griffithii	Oak	Meghalaya	974	10.06	13.1	10.9	8.8	1.1	1.6	8.0	7.1	5.8	4.6	3.6	2.9	—	—	A
Quercus incane	Oak	Punjab	1008	10.82	15.8	13.1	10.5	1.2	1.8	8.7	7.8	6.3	5.0	3.9	3.2	—	—	A
Quercus lineate	Oak	W.Bengal	874	12.63	15.2	12.7	10.1	1.2	1.7	9.6	8.6	7.0	5.3	4.1	3.4	II	c	A
Quercus semecarpifolia	—	Punjab	834	11.58	15.8	13.1	10.5	1.3	1.8	8.3	7.3	6.0	3.8	2.9	2.4	—	—	A
Shorea robusta [4]	Sal (SAL)	M.P.	805	12.67	16.9	14.0	11.2	0.9	1.3	10.6	9.4	7.7	4.6	3.5	2.9	I	e	A
Soymida fabrifuga	Rohini (ROH)	Chennai	1116	12.22	21.5	17.9	14.4	1.6	2.3	15.0	13.3	10.9	12.9	10.0	8.2	I	—	A
Shorea talura	—	Maharashtra	721	12.20	16.8	14.0	11.2	1.1	1.6	12.6	11.2	9.2	6.8	5.3	4.3	—	—	—
Plerygota alata (Syn. Sterculia alata)	Narikel (NAR)	Assam	593	10.95	13.4	11.8	8.9	0.8	1.2	8.2	7.3	6.0	2.7	2.1	1.7	III	—	C
Syzygium cumini	Jaman (JAM)	Assam	841	10.55	14.8	12.4	9.9	1.1	1.6	9.0	8.0	6.5	6.9	5.4	4.4	II	e	A
Terminalia bellirica	Bahera (BAH)	U.P.	729	10.19	13.6	11.3	9.0	1.0	1.4	8.4	7.5	6.1	3.7	2.8	2.3	III	b	B
Terminalia chebula	Myrobalan (MYR)	—	918	12.37	17.1	14.2	11.4	1.1	1.6	1.2	10.4	8.5	6.7	5.2	4.3	II	c	A
Terminalia citrina	—	Assam	755	11.89	17.1	14.3	11.4	1.1	1.6	10.8	9.6	7.9	5.0	3.9	3.2	—	—	—
Terminalia manii	Black—chuglam (BCH)	S.Andaman	822	12.66	16.8	14.0	11.2	1.1	1.6	10.3	9.2	7.5	5.1	4.0	3.2	II	a	B
Tectona grandis	Teak (TEA)	U.P.	660	9.97	15.5	12.9	10.3	1.2	1.6	9.4	8.3	6.8	4.5	3.5	2.8	I	e	B
Terminalia paniculate	Kindal (KIN)	Maharashtra	765	10.57	13.1	10.9	8.7	0.9	1.3	8.6	7.7	6.3	3.6	2.8	2.3	I	c	A
Alreminalia alata	Laurel (LAU), Sain	Chennai	906	10.54	15.1	12.5	10.0	1.1	1.6	9.4	8.4	6.8	6.2	4.8	4.0	I	b	A
Terminalia bilata	White-chuglam (WCH)	S.Andaman	690	12.38	15.5	13.0	10.4	0.9	1.2	9.8	8.7	7.1	3.6	2.8	2.3	III	e	B
Thespesia populnea	Bhendi (BHE)	Maharashtra	766	10.36	18.9	15.8	12.6	1.3	1.9	11.3	10.0	8.2	4.4	3.4	2.8	—	—	B
Xylia xylocarpa	Irul (IRU)	Maharashtra	839	11.63	16.2	13.5	10.8	1.3	1.8	10.9	9.7	7.9	7.8	6.0	4.9	I	e	A
Zanthoxylum budranga	Mullilam (MUL)	W.Bengal	587	10.65	14.7	12.2	9.8	0.9	1.2	9.5	8.4	6.9	3.4	2.6	2.1	I	c	B
Adina oligocephala	—	Arunachal	715	11.17	15.2	12.7	10.1	1.2	1.7	10.3	9.2	7.5	4.0	3.1	2.4	—	—	—
Castanopsis indica	Chestnut	Meghalaya	688	12.54	14.8	12.3	9.9	1.0	1.4	9.8	8.7	7.1	3.4	2.7	2.2	—	—	B
Eucalyptus citriodara	Eucalyptus	Nilgiri	831	12.12	17.3	14.4	11.5	1.4	2.0	11.0	9.8	8.0	4.2	3.3	2.7	—	—	—
Eucalyptus citriodata	Eucalyptus	Ooty	725	9.35	15.4	12.9	10.3	1.0	1.4	8.6	7.6	6.3	3.0	2.4	2.0	—	—	—
Eucalytus tereticornis	Eucalyptus	Chennai	777	11.05	16.7	13.9	11.1	1.0	1.4	9.7	8.6	7.1	3.4	2.6	2.2	III	c	—
GROUP C																		
Tbizia procera	White siris	U.P.	643	9.02	13.4	11.2	8.9	1.0	1.4	8.5	7.6	6.2	4.3	3.3	2.7	I	c	B
Artocarpus lakocha	Lakooch (LAK)	U.P.	647	6.14	10.0	8.3	6.7	1.0	1.4	5.3	4.7	3.8	2.8	2.2	1.8	I	—	B
Artocarpus hetarophyllus (Syn. A. Integrifolia)	Jack, kathal (KAT)	Chennai	617	9.46	13.9	11.6	9.2	1.0	1.5	9.3	8.3	6.8	4.5	3.5	2.9	I	d	B
Aphanamixis polystachya (Syn. Amoora rehituka)	Pitraj (PIT)	W. Bengal	668	8.98	12.3	10.2	8.2	1.1	1.5	8.0	7.1	5.8	4.0	3.1	2.6	I	—	B
Adina cordifolia [4]	Haldu (HAL)	U.P.	663	8.54	13.3	11.1	8.9	1.0	1.4	8.7	7.7	6.3	4.4	3.4	2.8	III	a	B
Anthocephyalus chinensis (Syn. A. Cadamba)	Kadam (KAD)	—	485	1.88	9.7	8.1	5.4	0.7	1.0	5.9	5.3	4.3	1.9	1.5	1.2	III	a	—
Arlocarpus chaplasha	Chaplash (CHP)	Assam	515	9.11	13.2	11.0	8.8	0.9	1.2	8.5	7.5	6.2	3.6	2.8	2.3	III	d	B
Acacia leucophloea	Hiwar (HIW)	M.P.	737	7.85	13.4	11.2	9.0	1.0	1.5	7.5	6.7	5.4	4.5	3.5	2.8	—	—	A
Acacia melanoxylone	Black wood	Chennai	630	9.45	13.0	10.8	8.7	1.1	1.5	7.6	6.8	5.5	3.2	2.5	2.0	—	—	—
Acacia mearnsii (Syn. A. mollissima)	Black wattle	Chennai	669	6.10	10.4	8.6	6.9	0.8	1.2	6.0	5.4	4.4	2.3	1.8	1.5	—	—	—
Accer spp.	Maple (MAP)	Punjab, U.P.	551	7.35	9.9	8.2	6.5	0.9	1.3	5.5	4.9	4.0	2.1	1.7	1.4	III	—	B
Aegla marmalos (Syn. Intsia bijuga)	Bael (BEL)	U.P.	890	8.81	13.5	11.2	9.0	1.4	2.0	8.8	7.8	6.4	6.8	5.3	4.3	III	—	B
Afzelia bijuga	—	Andaman	705	9.16	13.2	11.0	8.8	1.1	1.5	7.9	7.1	5.8	4.0	3.1	2.6	—	—	—
Ailanthus grandis	Gokul (GOK)	W. Bengal	404	7.94	8.3	6.9	5.5	0.6	0.8	5.3	4.7	3.9	1.1	0.9	0.7	III	—	C
Anogeissus pendula	Kardhai (KAH)	U.P.	929	9.75	17.0	14.2	11.4	1.3	1.8	9.8	8.7	7.1	6.5	5.1	4.2	III	—	A
Areca nut	—	Kerala	833	9.48	15.2	12.7	10.2	1.2	1.6	10.8	9.6	7.8	7.3	5.7	4.7	—	—	—
Albizia lucida	—	Arunachal, A.P.	566	8.51	10.7	8.9	7.1	8.2	1.2	7.3	6.3	5.3	2.3	1.8	1.5	—	—	—

Table 1 — (*Continued*)

(1)	(2)	(3)	(4)	(5)	(6)	(7)	(8)	(9)	(10)	(11)	(12)	(13)	(14)	(15)	(16)	(17)	(18)	(19)
Azodirachta indica	Neem (NEE)	U.P.	836	8.52	14.6	12.1	9.7	1.3	1.8	10.0	8.9	7.3	5.0	3.9	3.2	—	—	—
Boswellia seriota	Salai (SAA)	Bihar	551	7.21	9.4	7.9	6.3	0.7	1.1	5.5	4.9	4.0	2.1	1.6	1.3	I	e	C
Bridelia retusa	Kassi (KAS)	Bihar	584	9.42	11.6	9.7	7.7	0.9	1.3	7.1	6.3	5.1	4.0	3.1	2.6	I	e	B
Betula lnoides	Birch (BIR)	W. Bengal	625	9.23	9.6	8.0	6.4	0.8	1.1	5.7	5.0	4.1	2.2	1.7	1.4	—	—	B
Bischofia javanica	Uriam Bishopwood (URI)	Chennai	769	8.84	9.6	8.2	6.5	0.8	1.1	5.9	5.3	4.3	3.6	2.8	2.3	III	—	A
Burserra serrata (Syn. Protium serratum)	Muntenga (MUR)	A.P.	756	1.17	15.5	13.3	10.5	0.9	1.3	10.1	9.0	7.4	5.3	4.1	3.4	II	c	—
Careya arbersa	Kumbi (KUM)	U.P.	889	8.37	13.1	10.9	8.8	1.0	1.5	7.7	6.8	5.6	5.3	4.1	3.4	I	e	A
Cedrus deodara	Deodar (DEO)	H.P.	557	9.48	10.2	8.7	7.2	0.7	1.0	7.8	6.9	5.7	2.7	2.1	1.7	I	c	C
Cupressus torulosa	Cypress (CYP)	U.P.	506	8.41	8.8	7.6	6.2	0.6	0.8	6.9	6.2	5.0	2.4	1.8	1.5	I	c	C
Castanopsis hystrix	Indian chestnut (ICH)	W. Bengal	624	9.85	10.6	8.8	7.0	0.8	1.2	6.4	5.7	4.6	2.7	2.1	1.7	II	b	B
Chukrasia velutina (Syn. C. Tabularis)	Chickrassy (CHI)	W. Bengal	666	8.35	11.8	9.8	7.9	1.1	1.5	7.1	6.3	5.2	3.9	3.1	2.5	II	c	B
Calophyllum wightianum	Poon (POO)	Maharashtra	689	8.68	13.5	11.2	9.0	1.0	1.4	8.7	7.8	6.4	4.0	3.1	2.5	II	—	B
Canarium strictum	White dhup	Assam	569	10.54	10.1	8.4	6.7	0.7	1.1	6.2	5.5	4.5	2.1	1.6	1.3	III	—	C
Chlorophora excelsa	—	Chennai	471	6.57	10.2	8.5	6.8	0.5	0.7	6.4	5.6	4.6	2.0	1.6	1.3	—	—	—
Cocosnucifera	Coconut (COC)	Kerala	761	7.34	9.2	7.7	6.1	0.7	1.1	9.5	8.4	6.9	3.9	3.0	2.5	—	—	—
Dalbergia latifolia	Rosewood (ROS)	M.P.	884	8.39	12.9	10.8	8.6	1.1	1.6	8.0	7.1	5.8	4.2	3.3	2.7	I	—	B
Dalbergia sissee	Sisso (SIS)	Punjab	799	7.14	12.8	10.7	8.5	1.3	1.8	8.2	7.3	6.0	4.2	3.3	2.7	I	e	B
Dillemia indica	Dillenia (DIL)	W. Bengal	617	8.61	12.1	10.0	8.0	0.8	1.2	7.3	6.5	5.3	2.7	2.1	1.7	III	a	B
Dillenia pentagyne	Dillenia (DIL)	W. Bengal	622	7.56	11.8	9.9	7.9	0.9	1.3	7.1	6.3	5.2	3.5	2.7	2.2	III	d	B
Diospyres melanoxylon	Ebony (EBO)	Maharashtra	818	7.69	10.9	9.1	7.3	0.9	1.2	7.0	6.2	5.1	3.3	2.6	2.1	II	—	A
Duabanga grandiflora (Syn. D. Sonneratioides)	Lampati (LAP)	W. Bengal	485	8.38	9.8	8.2	6.5	0.6	0.9	6.4	5.7	4.7	1.8	1.4	1.1	III	c	C
Elesocarpus tuberculatus	Rudrak (RUD)	Chennai	466	8.74	9.7	8.1	6.4	0.7	1.0	6.3	5.6	4.6	2.0	1.5	1.3	—	—	C
Eucalyptus hybrid	Mysore gum (MGU)	Chennai	753	6.00	10.2	8.5	6.8	0.9	1.2	7.3	6.5	5.3	4.0	3.1	2.5	III	e	—
Calitres rhomboidea (Syn. Frenela rhomboidea)	—	Chennai	607	6.48	9.2	7.7	6.1	0.7	1.0	6.9	6.1	5.0	4.0	3.1	2.6	—	—	—
Goruga pinnata	Garuga (GAU)	U.P.	571	7.58	11.7	9.7	7.8	1.0	1.5	7.2	6.4	5.3	3.4	2.6	2.1	I	e	B
Gmeline arborea	Gamari (GAM)	U.P.	501	7.02	9.8	8.2	6.6	0.8	1.2	5.7	5.0	4.1	4.2	3.2	2.7	I	e	B
Gardonia latifolio	Gardenia (GAI)	M.P.	705	7.13	14.1	11.7	9.4	1.2	1.7	8.4	7.4	6.1	4.6	3.6	3.0	—	—	—
Hardwickis binata	Anjan (ANJ)	M.P.	852	6.64	14.1	11.8	9.4	1.3	1.8	9.0	8.0	6.5	7.4	5.6	4.7	I	e	—
Heloptelea integrifolia	Kanju (KAN)	U.P.	592	7.46	12.0	10.0	8.0	0.9	1.3	6.7	6.0	4.9	2.8	2.2	1.8	III	b	B
Heterrophrogmo rexburghii	Palang (PAL)	M.P.	616	8.69	12.3	10.2	8.2	0.7	1.0	7.9	7.0	5.7	3.4	2.6	2.1	—	—	—
Juglans spp.	Walnut (WAL)	U.P.	565	9.00	9.9	8.3	6.6	0.9	1.2	5.8	5.2	4.2	2.2	1.7	1.4	III	—	B
Lagerstrosmia speciosa (Syn. L. flesregihal)	Jarul (JAAR)	N.Andaman	622	8.53	12.1	10.1	8.1	0.8	1.8	7.7	6.8	5.6	3.4	2.6	2.2	II	e	B
Lannea grandis (Syn. L.coromandelica)	Jhingan (JHI)	U.P.	557	5.63	8.5	7.1	5.7	0.6	0.9	4.9	4.4	3.6	2.2	1.7	1.4	III	e	B
Leucanena leucocephala	Subabul (SUB)	U.P.	673	6.32	11.6	9.7	7.8	1.0	1.5	7.4	6.6	5.4	3.8	3.0	2.4	—	—	
Lophopatalum wightianum	Banati (BAN)	Chennai	460	7.33	8.5	7.5	5.6	0.5	0.8	5.3	4.7	3.8	1.8	1.4	1.1	III	—	C
Madhuca longifolia varlatifolia (Syn. Bassia latifolia)	Mahua (MAU)	M.P.	936	8.82	13.0	10.8	8.7	1.0	1.4	7.5	6.7	5.5	6.3	4.9	4.0	I	e	A
Mangifera indicd	Mango, Aam (MAN)	Orissa	661	9.12	12.2	10.2	8.2	1.0	1.4	7.3	6.5	5.3	3.1	2.4	2.0	III	a	C
Mochilus macrantha	Machilus (MAC)	Chennai	521	7.63	10.2	8.5	6.8	0.7	1.0	6.3	5.6	4.6	2.4	1.9	1.5	III	e	B
Mallotus philippinensis	Raini (RAI)	U.P.	662	7.51	10.8	9.0	7.2	1.0	1.4	6.0	5.4	4.4	2.9	2.3	1.8	III	—	B
Manglietia insignia	—	Assam	449	10.37	10.9	9.1	7.3	0.7	1.0	8.0	7.1	5.8	3.4	2.6	2.1	—	—	—
Michelia montana	Champ (CHM)	W. Bengal	512	8.25	10.9	9.1	7.3	0.7	1.0	6.6	5.9	4.8	2.8	2.2	1.8	I	—	B
Mitragyna pervifolia (Syn. Stephagyne pervifolia)	Kaim (KAI)	U.P.	651	7.82	12.6	10.5	8.4	1.0	1.5	7.9	7.0	5.7	3.7	2.9	2.4	III	b	B

Table 1 — (*Continued*)

(1)	(2)	(3)	(4)	(5)	(6)	(7)	(8)	(9)	(10)	(11)	(12)	(13)	(14)	(15)	(16)	(17)	(18)	(19)
Michelia excelsa	Champ (CHM)	W. Bengal	513	10.12	9.8	8.2	6.5	0.7	1.0	6.1	5.5	4.5	1.6	1.3	1.0	II	e	B
Miliusa velutnia	Domsal (DOM)	U.P.	747	7.92	11.7	9.7	7.8	1.1	1.6	7.0	6.3	5.1	3.7	2.9	2.4	III	—	—
Morus alba	Mulberry (MUL)	U.P.	743	8.20	11.8	9.8	7.9	1.0	1.4	6.6	5.8	4.8	3.8	2.9	2.4	II	—	B
Morus serrata	Mulberry (MUL)	H.P.	657	7.03	10.2	8.5	6.8	0.9	1.3	5.6	5.0	4.1	2.6	2.0	1.6	III	—	B
Morus laevigata	Bola (BOL)	Andaman	588	8.61	12.3	10.2	8.2	1.0	1.5	7.2	6.4	5.3	3.3	2.5	2.1	—	—	B
Ougeinia eejeinensis (Syn. O. delbergioides)	Sandan (SAD)	M.P.	784	8.54	13.3	11.1	8.9	1.2	1.7	8.5	7.5	6.2	5.1	3.9	3.2	I	—	B
Phoebe hainesiana	Bonsum (BOH)	Assam	566	9.50	13.2	11.0	8.8	0.8	1.2	8.8	7.8	6.4	2.8	2.1	1.8	II	c	B
Pinus roxburghii (Syn. P. longifolia)	Chir (CHR)	U.P.	525	9.82	8.5	7.3	6.0	0.6	0.9	6.0	5.3	4.4	2.0	1.5	1.3	III	b	C
Pinus wallichiana	Kail (KAL)	—	515	6.80	6.6	5.6	5.0	0.6	0.8	5.2	4.6	3.8	1.7	1.3	1.0	II	c	C
Phoebe goalperansis	Bonsum (BOH)	Assam	511	7.65	9.7	8.1	6.5	0.7	1.0	6.6	5.9	4.8	2.2	1.7	1.4	II	c	B
Parretiopsis jacquementiena	Rohu Parrotia	H.P.	761	5.77	12.5	10.4	8.3	1.2	1.7	6.8	6.1	5.0	4.0	3.1	2.5	III	—	B
Pinus kesia (Syn. Pinus insularis)	Khasi pine (KPI)	North East	513	7.38	8.9	7.4	5.9	0.6	0.7	5.8	5.2	4.3	1.5	1.2	1.0	III	a	B
Pistacia integerrima	Kikar singhi	J&K	881	7.32	13.1	10.9	8.7	1.2	1.7	8.0	7.1	5.8	4.3	3.4	2.8	—	—	—
Podocarpus nerrifolius	Thitmin (THT)	S.Andaman	533	9.41	12.5	10.4	8.3	6.1	0.9	8.0	7.1	5.8	2.6	2.0	1.6	II	—	—
Polyalthia fragrances	Debdaru (DEB) (Nedunar)	Maharashtra	752	9.15	11.9	9.9	7.9	0.8	1.2	6.7	6.0	4.9	3.0	2.3	1.9	III	—	B
Polyalthia coreoides		M.P.	700	9.29	13.2	11.0	8.8	1.0	1.4	7.1	6.3	5.2	3.2	2.5	2.0	—	—	—
Prunus napeulensis	Arupati	W. Bengal	548	9.41	104.4	8.7	69.6	0.9	1.2	6.7	6.0	4.9	2.4	1.9	1.6	—	—	—
Pterespermum acerifolium	Hattipaila (HAT)	W. Bengal	607	9.55	13.5	11.3	9.0	0.9	1.2	8.7	7.7	6.3	3.2	2.5	2.0	III	c	B
Qucrcus spp.	Oak	North East	657	11.65	11.4	9.5	7.6	0.8	1.2	6.7	5.9	4.8	2.0	1.6	1.3	II	c	B
Raderomachera xylocarpe (Syn. Sterosperam xylocarpum)	Vedankonnai	Chennai	696	8.52	13.2	11.0	8.8	1.1	1.5	9.0	8.0	6.6	4.3	3.3	2.7	II	a	—
Schleichera oleosa (Syn. S. trijuga)	Kusum (KUS)	Bihar	1032	12.12	15.5	13.0	10.4	1.5	2.1	10.9	9.7	7.9	6.1	4.2	3.9	II	a	A
Schima wallichii	Chilauni (CHL)	W. Bengal	693	9.57	11.1	9.3	7.4	0.9	1.3	6.6	5.9	4.8	2.3	1.8	1.4	III	d	B
Shotea assamica	Makai (MAK)	Assam	548	9.27	11.1	9.2	7.4	0.9	1.3	7.1	6.3	5.2	2.9	2.2	1.8	III	c	B
Sonneralia apetale	Keora (KEO)	W. Bengal	617	8.63	12.8	10.7	8.5	0.9	1.3	7.4	6.6	5.4	4.8	3.7	3.0	II	—	B
Stereospermum suaveolans	Padri (PAD)	U.P.	721	8.86	13.3	11.1	8.9	0.9	1.3	7.3	7.0	5.7	3.5	2.7	2.2	III	—	B
Tactona grandis	Teak (TEA)	M.P.	617	8.49	12.8	10.7	8.5	0.8	1.3	7.9	7.0	5.7	4.0	3.1	2.6	I	e	B
Terminalia arjuna	Arjun (ARJ)	Bihar	794	7.71	12.2	10.2	8.2	1.1	1.6	7.4	6.6	5.4	5.2	4.1	3.3	II	b	B
Terminalia myriocarpa	Hollock (HOC)	Assam	615	9.62	11.9	9.9	8.0	0.9	1.2	7.6	6.7	5.5	2.9	2.2	1.8	III	a	B
Terminalia procera	White bombwae (WBO)	N.Andaman	626	8.99	11.8	9.8	7.9	0.9	1.3	7.2	6.4	5.3	3.0	2.3	1.9	III	b	B
Taxus buccata	Yew (YEW)	W. Bengal	705	7.79	14.3	11.9	9.5	1.2	1.7	8.7	7.8	6.4	4.7	3.7	3.0	—	—	—
Tamarindus indica	Imli (IML)	Chennai	913	5.63	11.4	9.5	7.6	1.2	1.7	7.0	6.2	5.1	5.3	4.1	3.4	—	—	B
Toena ciliata	Toon (TOO)	U.P.	487	6.40	8.7	7.3	5.8	0.7	1.0	5.4	4.8	3.9	2.4	1.8	1.5	II	c	B
Vateria indica	Vellapine (VEL)	Chennai	535	10.95	11.5	9.6	7.6	0.7	1.1	7.5	6.7	5.5	2.3	1.8	1.4	III	c	C
Aeculas indica	Horse chestnut (HCH)	U.P.	484	7.55	8.5	7.1	5.7	0.8	1.1	4.8	4.2	3.5	1.8	1.4	1.1	—	—	B
Borassus flabelsfer	Tad (Palmyra) (TAD)	A.P.	838	8.79	10.5	8.8	7.0	0.7	1.0	10.0	8.8	7.2	4.7	3.6	2.7	—	—	—
Eucalyptus cemaldulensis	Eucalyptus	Karnataka	804	9.53	12.8	10.6	8.5	0.8	1.1	7.2	6.4	5.2	3.5	2.7	2.2	—	—	A
Eucalyptus camaldulenis	Eucalyptus	U.P.	781	7.03	12.4	10.4	8.3	1.1	1.6	7.9	7.0	5.7	3.5	2.8	2.3	—	—	A
Eucalyptus pilularia	Eucalyptus	T.N.	713	9.22	14.8	12.3	11.1	1.0	1.4	8.5	7.6	6.2	2.8	2.2	1.8	—	—	A
Eucalyptus propingus	Eucalyptus	T.N.	584	7.93	12.8	10.7	8.5	0.8	1.2	8.0	5.4	4.4	2.5	1.9	1.6	—	—	A
Eucalyptus saligna	Eucalyptus	U.P.	819	8.24	11.5	9.6	7.6	1.5	2.1	8.2	7.3	6.0	6.2	4.8	4.0	—	—	A

Table 1 — (*Concluded*)

(1)	(2)	(3)	(4)	(5)	(6)	(7)	(8)	(9)	(10)	(11)	(12)	(13)	(14)	(15)	(16)	(17)	(18)	(19)

[1] Classification for preservation based on durability tests, etc.
Class:
I — Average life more than 120 months;
II — Average life 60 months and above but less than 120 months; and
III — Average life less than 60 months.

[2] *Treatability Grades:*
a — Heartwood easily treatable;
b — Heartwood treatable, but complete penetration not always obtained; in case where the least dimension is more than 60 mm;
c — Heartwood only partially treatable;
d — Heartwood refractory to treatment; and
e — Heartwood very refractory to treatment, penetration of preservative being practically nil even from the ends.

[3] Classifications based on seasoning behaviour of timber and refractoriness with respect to cracking, splitting and drying rate:
A — Highly refractory (slow and difficulty to season free from surface and end cracking);
B — Moderately refractory (may be seasoned free from surface and end cracking within reasonably short periods, given a little protection against rapid drying conditions); and
C — Non-refractory may be rapidly seasoned free from surface and end-cracking even in the open air and sun. If not rapidly dried, they develop blue stain and mould on the surface.

[4] Species thus marked and tested from other localities show higher strength to enable their categorization in higher group.
For Example:
i) Sal tested from W. Bengal, Bihar, U.P. and Assam can be classified as Group 'A' species;
ii) Haldu tested from Bihar can be classified as Group 'B' species;
iii) Morus laevigate (Bole) of Assam can be classified in Group 'B' species.

Table 2 Permissible Lateral Strengths (in Double Shear) of Nails 3.55 mm Dia (9 SWG), 80 mm Long

(*Clause* 4.3)

Sl No.	Species of Wood		For Permanent Construction Strength per Nail		For Temporary Structures Strength per Nail (For Both Lengthening Joints and Node Joints)
	Botanical Name	Trade Name	Lengthening Joints $N \times 10^2$	Node Joints $N \times 10^2$	$N \times 10^2$
(1)	(2)	(3)	(4)	(5)	(6)
i)	*Albies pirdrow*	Fir	8	2	12
ii)	*Acacia catecha*	Khair	20	17.5	37.0
iii)	*Acacia nilotica*	Babul	15	11	32.5
iv)	*Acrocarpus fraxinifolius*	Mundani	18	9.5	19.5
v)	*Adina cordifolia*	Haldu	23.5	10	22
vi)	*Albizia lebbeck*	Kokko	20	7	24
vii)	*Albizia odoratissima*	Kala siris	14	5	22
viii)	*Anogeissus latifolia*	Axlewood	20	10	29
ix)	*Aphanamixis polystachya*	Pithraj	19	9	19
x)	*Azadiratchta indica*	Neem	22	11.5	19
xi)	*Balanocarpus utilis*	Karung	17.5	21	32
xii)	*Bischofia javnica*	Uriam	13	6.5	18
xiii)	*Betula alnoides*	Birch	13	12	22.5
xiv)	*Boswellia serrata*	Salai	12	5	14.5
xv)	*Calophyllum spp.*	Poon	16	9	21
xvi)	*Canarium euphyllum*	White dhup	9	8	10.5
xvii)	*Castanopsis hystrix*	Indian chestnut	18	10.5	23.5
xviii)	*Cedrus deodara*	Deodar	9	4	15
xix)	*Chukrasia tabularis*	Chikrassy	24	8	27
xx)	*Cinnamomum spp.*	Cinnomon	12	9	13
xxi)	*Cullenia rosaana (Syn. Cullenia excalsa)*	Karani	11.5	5	19
xxii)	*Cupressus torulosa*	Cypress	6	5	18
xxiii)	*Dalbergia latifohia*	Rosewood	19	8.5	23
xxiv)	*Dalberia sissoo*	Sissoo	14.5	7.5	19
xxv)	*Dipterocarpus macrocarpus*	Hollong	17	7	20
xxvi)	*Dipterocarpus spp.*	Gurjan	19	9	19.5
xxvii)	*Dillenia pertagyna*	Dillenia	16.5	12	16
xxviii)	*Diospyros melanoxylon*	Ebony	26.5	10	30.5
xxix)	*Duabanga grandiflora*	Lampati	15	5	12
xxx)	*Dysoxylum binectariferum*	White Cedar	7.5	5	14.5
xxxi)	*Eucalyptus eugenioides*	Eucalyptus	17	10	30
xxxii)	*Garuga pinnata*	Garuga	11.0	7.5	21.0
xxxiii)	*Gmelina arborea*	Gaman	8	4	9.5
xxxiv)	*Grerillea robusta*	Silver oak	12.0	7.0	10.5
xxxv)	*Grewia tilifolia*	Dhaman	13	5	24
xxxvi)	*Lagerstroemia spp.*	Jarul	24.5	21.5	22.5
xxxvii)	*Holoptelea integrifolia*	Kanju	12.5	9.5	20.5
xxxviii)	*Hopea parviflora*	Hopea	31.5	13	28.5
xxxix)	*Lagerstroemia spp.*	Lendi	19	5	26
xl)	*Madhuka Logifera (Syn. Barfia Latifolia)*	Mahua	23	7.5	26
xli)	*Mangifera indica*	Mango	11	9	16
xlii)	*Maniltoa polyandra*	Ping	26	23.5	32
xliii)	*Mesua ferrea*	Mesua	26	8	41
xliv)	*Michelia spp.*	Champ	13	9	20
xlv)	*Millingtonia spp.*	Phulsopa	10.5	6	17
xlvi)	*Morus alba*	Mulberry	13	10.5	22.5
xlvii)	*Melia azedarach*	Persian lilac (bakain)	10.5	2.5	10.5
xlviii)	*Morus alba*	Mulberry	13	10.5	22.5
xlix)	*Ougeinia oojeinensis*	Sandan	17	11	18
l)	*Phoebe spp.*	Bonsum	12	6	13
li)	*Pinus roxburghii*	Chir	11	10	16
lii)	*Pinus wallichiana*	Kail	7	3	9
liii)	*Planchonia andamanica*	Red bombwe	14	13	29
liv)	*Planchonia valida (Syn. P. andamonica)*	Red bombwe	14.5	13	29.5
lv)	*Poeciloneuron indicum*	Ballagi	16	7	15.5
lvi)	*Populus deltoides*	Poplar	16	11.5	17.5
lvii)	*Protium serratum (Syn. Burserra Serrata) A.P.*		25.5	7.0	22.5
lviii)	*Pterocarpus marsupium*	Bijasal	15	12	27
lix)	*Pterocarpus dalbergiodes*	Pauduak	19	14	23
lx)	*Quercus spp.*	Oak (Assam)	21	10	37.5
lxi)	*Quercus spp.*	Oak (U.P.)	11	10.5	26.5
lxii)	*Scheichera cleosa*	Kusum	23	16	39.5
lxiii)	*Schima wallachi*	Chillauni	19.5	9.5	25.5
lxiv)	*Shorea assamica*	Makai	12.5	7.5	15.0
lxv)	*Shorea robusta*	Sal (M.P.)	23	15.5	19.5

Table 2 — (*Concluded*)

(1)	(2)	(3)	(4)	(5)	(6)
lxvi)	*Shorea robusta*	Sal (U.P.)	10	5	19
lxvii)	*Stercospermum chelonoides*	Padriwood	16	8	19.5
lxviii)	*Syzygium spp.*	Jamum	15	12	25
lxix)	*Tectona grandis*	Teak	14	8	13
lxx)	*Terminalia alata*	Sain	16	16	29
lxxi)	*Terminalia arjuna*	Arjun	8.5	7	16.5
lxxii)	*Terminalia bellirica*	Bahera	10	10	14
lxxiii)	*Terminalia biolata*	White chuglam	18	9	21
lxxiv)	*Terminalia chebula*	Myrobalan	16.5	5.5	22.5
lxxv)	*Terminalia proccra*	Badam	18	10.5	20
lxxvi)	*Terminalia manii*	Black chuglam	23	10	33
lxxvii)	*Terminalia myriocarpa*	Hollock	13	10	19.5
lxxviii)	*Toona spp.*	Toona	10	8	21
lxxix)	*Xylia xylacarpa*	Irul	23	6	33
lxxx)	*Toona ciliata*	Toon	16	9	21

NOTES

1 Nails of 3.55 mm (9 SWG) diameter are most commonly used. The above values can also be used for 4 mm (8 SWG) diameter 100 mm long nails.

2 The values in Newton (N) are approximate converted values from kgf. For exact conversion the value is 1 kgf = 9.806 65 N.

3 Preboring of nail-jointed timber construction is desirable and shall be done in accordance with good practice as in, **6.2.2** and Table 3 of good practice [6-3A(7)].

Table 3 Permissible Lateral Strengths (In Double Shear) of Nails 5.00 mm Dia (6 SWG), 125 mm and 150 mm Long

(*Clause* 4.3)

Sl No.	Species of Wood		For Permanent Construction Strength per Nail		For Temporary Structures Strength Per Nail (For Both Lengthening Joints and Node Joints)
	Botanical Name	Trade Name	Lengthening Joints	Node Joints	
			N × 10^2	N × 10^2	N × 10^2
(1)	(2)	(3)	(4)	(5)	(6)
i)	*Abies pindrow*	Fir	16.5	4.5	21
ii)	*Acacia catechu*	Khair	42	25	71.5
iii)	*Acacia nilotica*	Babul	27	13.5	53
iv)	*Alibizia procera*	Safed siris	35	18	-
v)	*Alibizia odoratissima*	Kala siris	27.5	17.5	45
vi)	*Alstonia scholaris*	Chatian	9.5	5.5	27
vii)	*Anogeissus latifolia*	Axlewood	22.5	13	46.5
viii)	*Azadirachata indica*	Neem	23.5	16	47
ix)	*Cupressus torulosa*	Cypress	20	7	27
x)	*Cullenia rosayroana*	Karani	11	9.5	30
xi)	*Dalbergia sissoo*	Sissoo	17	15	43
xii)	*Diptrocarous spp.*	Gurjan	19.5	9.5	33
xiii)	*Eucalyptus Prob. E. Tereticornis*	—	37.5	28.5	47
xiv)	*Hardwickia binata*	Anjan	32	19	59
xv)	*Hopea perviflora*	Hopea	60.5	25	61.5
xvi)	*Holoptelea integrifolia*	kanju	18	12.5	37.5
xvii)	*Mangifera indica*	Mango	22.5	15	32
xviii)	*Mesua ferrea*	Mesua	24	15.5	57.5
xix)	*Michelia champaca*	Champ	26	12.5	39
xx)	*Pterocarpus marsupium*	Bijasal	20.5	15	43
xxi)	*Pinus roxburghii*	Chir	9	6	24
xxii)	*Shorea robusta* (U.P.)	Sal	19.5	17	37
xxiii)	*Shorea robusta*	Sal	30.5	20	41
xxiv)	*Schleichera cleosa*	Kusum	15	14	55
xxv)	*Stereospimum personatum*	Padriwood	22	8	34
xxvi)	*Syzygium cumini*	Jamum	18	14.5	38.5
xxvii)	*Terminalia myriocarpa*	Hollock	27.5	9	41
xxviii)	*Tectona grandis*	Teak	28	13	30
xxix)	*Toona ciliata*	Toon	19	7	32.5
xxx)	*Hopea utilis*	Karung kangoo	31	10	58
xxxi)	*Phoebe spp.*	Bonsum	20	7.5	30
xxxii)	*Pterocarpus dalbergiodes*	Padauk	27.4	13.4	37.7
xxxiii)	*Populus deltoides*	Poplar	21	15	38.5

NOTES

1 Nails of 5.00 mm diameter are most commonly used.

2 The values in Newton (N) are approximate converted values from kgf. For exact conversion the value is 1 kgf = 9.806 65 N.

3 Preboring of nail-jointed timber construction is desirable and shall be done in accordance with good practice as in, **6.2.2** and Table 3 of good practice [6-3A(7)].

Table 4 Permissible Percentage Moisture Content Values

(*Clause* 4.4)

Sl No.	Use	Zones (*see* Note)			
		I	II	III	IV
(1)	(2)	(3)	(4)	(5)	(6)
i)	Structural elements	12	14	17	20
ii)	Doors and windows:				
	a) 50 mm and above in thickness	10	12	14	16
	b) Thinner than 50 mm	8	10	12	14
iii)	Flooring strips for general purposes	8	10	10	12
iv)	Flooring strips for tea gardens	12	12	14	16

NOTE — The country has been broadly divided into the following four zones based on the humidity variations in the country:

Zone I — Average annual relative humidity less than 40 percent

Zone II — Average annual relative humidity 40 to 50 percent

Zone III — Average annual relative humidity 50 to 67 percent

Zone IV — Average annual relative humidity more than 67 percent

For detailed zonal classification in the country, tolerances, etc, reference may be made to good practice [6-3A(4)].

4.5 Sawn Timber

4.5.1 *Sizes*

Preferred cut sizes of timber for use in structural components shall be as given in Table 5, Table 6 and Table 7.

Table 5 Preferred Cut Sizes of Structural Timber for Roof Trusses (Span from 3 m to 20 m)

(*Clause* 4.5.1)

Sl No.	Thickness mm	Width mm							
(1)	(2)	(3)	(4)	(5)	(6)	(7)	(8)	(9)	(10)
i)	20	40	50	60	80	100	—	—	—
ii)	25	40	50	60	80	100	120	140	160
iii)	30	40	50	60	80	100	120	140	160
iv)	35	—	—	60	80	100	120	140	160
v)	40	—	—	60	80	100	120	140	160
vi)	50	—	—	60	80	100	120	140	160
vii)	60	—	—	—	80	100	120	140	160
viii)	80	—	—	—	—	100	120	140	160

NOTES

1 For truss spans marginally above 20 m, preferred cut sizes of structural timber may be allowed.

2 Preferred lengths of timber: 1, 1.5, 2, 2.5 and 3 m.

Table 6 Preferred Cut Sizes of Structural Timber for Roof Purlins, Rafters, Floor Beams, etc

(*Clause* 4.5.1)

Sl No.	Thickness mm	Width mm						
(1)	(2)	(3)	(4)	(5)	(6)	(7)	(8)	(9)
i)	50	80	100	120	140		—	—
ii)	60	80	100	120	140	160	—	—
iii)	80	—	100	120	140	160	—	—
iv)	100	—	—	—	140	160	180	200

NOTE — Preferred lengths of timber: 1.5, 2, 2.5 and 3 m.

Table 7 Preferred Cut Sizes of Structural Timber for Partition Framing and Covering, and for Centering

(*Clause* 4.5.1)

Sl No.	Thickness mm	Width mm								
(1)	(2)	(3)	(4)	(5)	(6)	(7)	(8)	(9)	(10)	(11)
i)	10	40	50	60	80	—	—	—	—	—
ii)	15	40	50	60	80	100	—	—	—	—
iii)	20	40	50	60	80	100	120	160	200	—
iv)	25	40	50	60	80	100	120	160	200	240
v)	30	40	50	60	80	100	120	160	200	240
vi)	40	40	—	60	80	100	120	160	200	240
vii)	50	—	50	—	80	100	120	160	200	240
viii)	60	—	—	60	80	100	120	160	200	240
ix)	80	—	—	—	80	100	120	160	200	240

NOTE — Preferred lengths of timber: 0.5, 1, 1.5, 2, 2.5 and 3 m.

4.5.2 *Tolerances*

Permissible tolerances in measurements of cut sizes of structural timber shall be as follows :

a) For width and thickness:

1) Up to and including 100 mm : $^{+3}_{-0}$ mm

2) Above 100 mm : $^{+6}_{-3}$ mm

b) For length : $^{+10}_{-0}$ mm

4.6 Grading of Structural Timber

4.6.1 Cut sizes of structural timber shall be graded, after seasoning, into three grades based on permissible defects given in Table 8:

a) Select Grade,

b) Grade I, and

c) Grade II.

Table 8 Permissible Defects for Cut Sizes of Timber for Structural Use

(*Clauses* 4.6.1 *and* 4.6.2.2)

All dimensions in millimetres.

Sl No.	Defects	Select Grade	Grade I	Grade II
(1)	(2)	(3)	(4)	(5)
i)	Wane	Shall be permissible at its deepest portion up to a limit of 1/8 of the width of the surface on which it occurs	Shall be permissible at its deepest portion up to a limit of 1/6 of the width of the surface on which it occurs	Shall be permissible at its deepest portion up to a limit of 1/4 of the width of the surface on which it occurs
ii)	Worm holes	Other than those due to powder post beetles are permissible	Other than those due to powder post beetles are permissible	Other than those due to powder post beetles are permissible
iii)	Slope of grain	Shall not be more than 1 in 20	Shall not be more than 1 in 15	Shall not be more than 1 in 12
iv)	Live knots:			

Width of Wide Faces of Cut Sizes of Timber, Max	*Permissible Maximum Size of Live Knot on*		*Permissible Maximum Size of Live Knot on*		*Permissible Maximum Size of Live Knot on*	
	Narrow Faces and ¼ of the Width Face Close to Edges of Cut Size of Timber	Remaining Central Half of the Width of the Wide Faces	Narrow Faces and ¼ of the Width Face Close to Edges of Cut Size of Timber	Remaining Central Half of the Width of the Wide Faces	Narrow Faces and ¼ of the Width Face Close to Edges of Cut Size of Timber	Remaining Central Half of the Width of the Wide Faces
75	10	10	19	19	29	30
100	13	13	25	25	38	39
150	19	19	38	38	57	57
200	22	25	44	50	66	75
250	25	29	50	57	66	87
300	27	38	54	75	81	114
350	29	41	57	81	87	123
400	32	44	63	87	96	132
450	33	47	66	93	99	141
500	35	50	69	100	105	150
550	36	52	72	103	108	156
600	38	53	75	106	114	159

v) Checks and shakes:

Width of the Face of the Timber Max	*Permissible Depth Max*	*Permissible Depth Max*	*Permissible Depth Max*
75	12	25	36
100	18	35	54
150	25	50	75
200	33	65	99
250	40	81	120
300	50	100	150
350	57	115	171
400	66	131	198
450	76	150	225
500	83	165	249
550	90	181	270
600	100	200	[illegible]

4.6.2 The prohibited defects given in **4.6.2.1** and permissible defects given in **4.6.2.2** shall apply to structural timber.

4.6.2.1 *Prohibited defects*

Loose grains, splits, compression wood in coniferous species, heartwood rot, sap rot, crookedness, worm holes made by powder post beetles and pitch pockets shall not be permitted in all the three grades.

4.6.2.2 *Permissible Defects*

Defects to the extent specified in Table 8 shall be permissible.

NOTE — Wanes are permitted provided they are not combined with knots and the reduction in strength on account of the wanes is not more than the reduction with maximum allowable knots.

4.6.3 *Location of Defects*

The influence of defects in timber is different for different locations in the structural element. Therefore, these should be placed during construction in such a way so that they do not have any adverse effect on the members, in accordance with the accepted standard [6-3A(5)].

4.7 Suitability

4.7.1 *Suitability in respect of Durability and Treatability for Permanent Structures*

There are two choices as given in **4.7.1.1** and **4.7.1.2**.

4.7.1.1 *First choice*

The species shall be any one of the following:

a) Untreated heartwood of high durability. Heartwood if containing more than 15 percent sap wood, may need chemical treatment for protection;

b) Treated heartwood of moderate and low durability and Class 'a' and Class 'b' treatability;

c) Heartwood of moderate durability and Class 'c' treatability after pressure impregnation; and

d) Sapwood of all classes of durability after thorough treatment with preservative.

4.7.1.2 *Second choice*

The species of timber shall be heartwood of moderate durability and Class 'd' treatability.

4.7.2 *Choice of Species for Load-Bearing Temporary Structures or Semi-Structural Components at Construction Site*

The species shall be any one of the following:

a) Heartwood of low durability and Class 'e' treatability; or

b) The species whose durability and/or treatability is yet to be established, as listed in Table 1.

4.8 Fastenings

All structural members shall be framed, anchored, tied and braced to develop the strength and rigidity necessary for the purposes for which they are used. Allowable stresses or loads on joints and fasteners shall be determined in accordance with recognized principles. Common mechanical fastenings are of bar type such as nails and spikes, wood screws and bolts, and timber connectors including metallic rings or wooden disc-dowels. Chemical fastenings include synthetic adhesives for structural applications.

NOTE — Synthetic adhesives are able to achieve for timber what welding has achieved for steel.

4.9 Requirements of Structural Timber

The various other requirements of structural timber for use in building shall be in accordance with the accepted standard [6-3A(5)].

5 PERMISSIBLE STRESSES

5.1 Fundamental stress values of different groups of timber are determined on small clear specimen according to accepted standards [6-3A(2)]. These values are then divided by the appropriate factors of safety to obtain the permissible stresses. Values of these factors of safety for different strength characteristics are as per the relevant table of the accepted standard [6-3A(5)].

5.2 The permissible stresses for Groups A, B and C for different locations applicable to Grade I structural timber shall be as given in Table 9 provided that the following conditions are satisfied:

a) The timbers should be of high or moderate durability and be given the suitable treatment where necessary;

b) Timber of low durability shall be used after proper preservative treatment to good practice [6-3A(6)]; and

c) The loads should be continuous and permanent and not of impact type.

5.3 The permissible stresses (excepting *E*) given in Table 9 shall be multiplied by the following factors to obtain the permissible stresses for other grades provided that the conditions laid down in **5.2** are satisfied:

a) For select grade timber : 1.16

b) For Grade II timber : 0.84

Table 9 Minimum Permissible Stress Limits (in N/mm²) in Three Groups of Structural Timbers (For Grade I Material)

(*Clauses* 5.2 *and* 5.3)

Sl No. (1)	Strength Character (2)	Location of Use (3)	Group A (4)	Group B (5)	Group C (6)
i)	Bending and tension along grain	Inside [1]	18.0	12.0	8.5
ii)	Shear [2]				
	Horizontal	All Locations	1.05	0.64	0.49
	Along grain	All Locations	1.5	0.91	0.70
iii)	Compression parallel to grain	Inside [1]	11.7	7.8	4.9
iv)	Compression perpendicular to grain	Inside [1]	4.0	2.5	1.1
v)	Modulus of elasticity ($\times 10^3$ N/mm^2)	All locations and grade	12.6	9.8	5.6

[1] For working stresses for other locations of use, that is, outside and wet, generally factors of 5/6 and 2/3 are applied.

[2] The values of horizontal shear to be used only for beams. In all other cases shear along grain to be used.

5.3.1 When low durability timbers are to be used [*see* **5.2**(b)] on outside locations, the permissible stresses for all grades of timber, arrived at by **5.2** and **5.3** shall be multiplied by 0.80.

5.4 Modification Factors for Permissible Stresses

5.4.1 *Due to Change in Slope of Grain*

When the timber has not been graded and has major defects like slope of grain, knots and checks or shakes but not beyond permissible value, the permissible stress given in Table 1 shall be multiplied by modification factor K_1 for different slopes of grain as given in Table 10.

Table 10 Modifications Factor K_1 to Allow for Change in Slope of Grain

(*Clause* 5.4.1)

Sl No.	Slope	Modification Factor (K_1)	
		Strength of Beams, Joists and Ties	Strength of Posts or Columns
(1)	(2)	(3)	(4)
i)	1 in 10	0.80	0.74
ii)	1 in 12	0.90	0.82
iii)	1 in 14	0.98	0.87
iv)	1 in 15 and flatter	1.00	1.00

NOTE — For intermediary slopes of grains, values of modification factor may be obtained by interpolation.

5.4.2 *Due to Duration of Load*

For different durations of design load, the permissible stresses given in Table 1 shall be multiplied by the modification factor K_2 given in Table 11.

NOTE — The strength properties of timber under load are time-dependent.

Table 11 Modification Factor (K_2), for Change in Duration of Loading

(*Clause* 5.4.2)

Sl No.	Duration of Loading	Modification Factor (K_2)
(1)	(2)	(3)
i)	Continuous (Normal)	1.0
ii)	Two months	1.15
iii)	Seven days	1.25
iv)	Wind and earthquake	1.33
v)	Instantaneous or impact	2.00

5.4.2.1 The factor K_2 is applicable to modulus of elasticity when used to design timber columns, otherwise they do not apply thereto.

5.4.2.2 If there are several duration of loads (in addition to the continuous) to be considered, the modification factor shall be based on the shortest duration load in the combination, that is, the one yielding the largest increase in the permissible stresses, provided the designed section is found adequate for a combination of other larger duration loads.

NOTE — In any structural timber design for dead loads, snow loads and wind or earthquake loads, members may be designed on the basis of total of stresses due to dead, snow and wind loads using modification factor K_2 = 1.33 for the permissible stresses (*see* Table 1) to accommodate the wind load, that is, the shortest of duration and giving the largest increase in the permissible stresses. The section thus found is checked to meet the requirements based on dead loads alone with modification factor K_2 = 1.00.

5.4.2.3 Modification factor K_2 shall also be applied to allowable loads for mechanical fasteners in design of joints, when the wood and not the strength of metal determines the load capacity.

6 DESIGN CONSIDERATIONS

6.1 All structural members, assemblies or framework in a building, in combination with the floors, walls and other structural parts of the building shall be capable of sustaining, with due stability and stiffness the whole dead and imposed loadings as per Part 6 'Structural Design, Section 1 Loads, Forces and Effects' of the Code, without exceeding the limits of relevant stresses specified in this Subsection.

6.2 Buildings shall be designed for all dead and imposed loads or forces assumed to come upon them during construction or use, including uplifts or horizontal forces from wind and forces from earthquakes or other loadings. Structural members and their connections shall be proportioned to provide a sound and stable structure with adequate strength and stiffness. Wooden components in construction generally include panels for sheathing and diaphragms, siding, beams, girder, columns, light framings, masonry wall and joist construction, heavy-frames, glued laminated structural members, structural sandwiches, prefabricated panels, lamella arches, portal frames and other auxiliary constructions.

6.3 Net Section

6.3.1 The net section is obtained by deducting from the gross sectional area of timber the projected area of all material removed by boring, grooving or other means at critical plane. In case of nailing, the area of the prebored hole shall not be taken into account for this purpose.

6.3.2 The net section used in calculating load carrying capacity of a member shall be at least net section determined as above by passing an imaginary plane or a series of connected planes transversely through the members.

6.3.3 Notches shall be in no case remove more than one quarter of the section.

6.3.4 In the design of an intermediate or a long column, gross section shall be used in calculating load carrying capacity of the column.

6.4 Loads

6.4.1 The loads shall conform to those given in Part 6 'Structural Design, Section 1 Loads, Forces and Effects' of the Code.

6.4.2 The worst combination and location of loads shall be considered for design. Wind and seismic forces shall not be considered to act simultaneously.

6.5 Flexural Members

6.5.1 Such structural members shall be investigated for the following:

a) Bending strength,
b) Maximum horizontal shear,
c) Stress at the bearings, and
d) Deflection.

6.5.2 *Effective Span*

The effective span of beams and other flexural members shall be taken as the distance from face of supports plus one-half of the required length of bearing at each end except that for continuous beams and joists the span may be measured from centre of bearing at those supports over which the beam is continuous.

6.5.3 Usual formula for flexural strength shall apply in design:

$$f_{ab} = \frac{M}{Z} \leq f_b$$

6.5.4 *Form Factors for Flexural Members*

The following form factors shall be applied to the bending stress:

a) *Rectangular section* — For rectangular sections, for different depths of beams, the form factor K_3 shall be taken as:

$$K_3 = 0.81\left(\frac{D^2 + 89\,400}{D^2 + 55\,000}\right)$$

NOTE — Form factor (K_3) shall not be applied for beams having depth less than or equal to 300 mm.

b) *Box beams and I-beams* — For box beams and I-beams the form factor K_4 shall be obtained by using the formula:

$$K_4 = 0.8 + 0.8y\left(\frac{D^2 + 89\ 400}{D^2 + 55\ 000} - 1\right)$$

where

$$y = p_1^2\left(6 - 8p_1 + 3p_1^2\right)\ (1 - q_1) + q_1$$

c) *Solid circular cross-sections* — For solid circular cross sections the form factor K_5 shall be taken as 1.18.

d) *Square cross-sections* — For square cross sections where the load is in the direction of diagonal, the form factor K_6 shall be taken as 1.414.

6.5.5 *Width*

The minimum width of the beam or any flexural member shall not be less than 50 mm or 1/50 of the span, whichever is greater.

6.5.6 *Depth*

The depth of beam or any flexural member shall not be taken more than three times of its width without lateral stiffening.

6.5.6.1 *Stiffening*

All flexural members having a depth exceeding three times its width or a span exceeding 50 times its width or both shall be laterally restrained from twisting or buckling and the distance between such restraints shall not exceed 50 times its width.

6.5.7 *Shear*

6.5.7.1 The following formulae shall apply:

a) The maximum horizontal shear, when the load on a beam moves from the support towards the centre of the span, and the load is at a distance of three to four times the depth of the beam from the support, shall be calculated from the following general formula:

$$H = \frac{VQ}{Ib}$$

b) For rectangular beams:

$$H = \frac{3V}{2bD}$$

c) For notched beams, with tension notch at supports (*see* **6.5.7.3**):

$$H = \frac{3VD}{2bD_1^2}$$

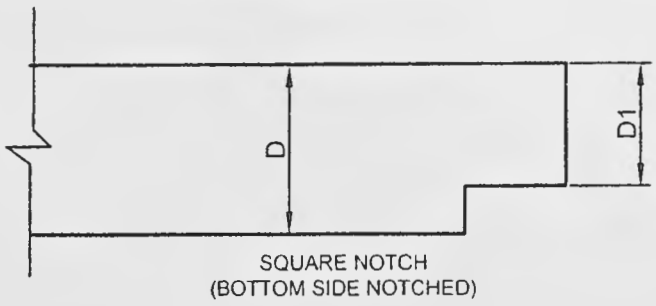

d) For notched at upper (compression) face, where $e > D$:

$$H = \frac{3VD}{2bD_1}$$

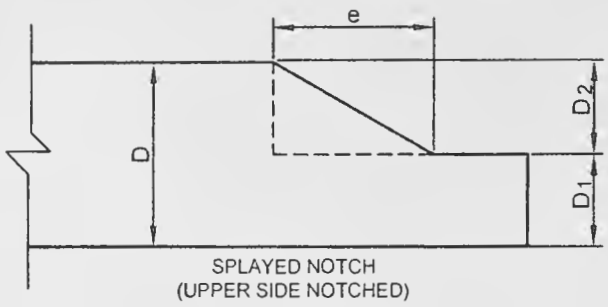

e) For notched at upper (compression) face, where $e < D$:

$$H = \frac{3V}{2b\left[D - \left(\frac{D_2}{D}\right)e\right]}$$

6.5.7.2 For concentrated loads:

$$V = \frac{10C(l-x)(x/D)^2}{9l\left[2+(x/D)^2\right]} \text{ and}$$

For uniformly distributed loads:

$$V = \frac{W}{2}\left(1 - \frac{2D}{l}\right)$$

After arriving at the value of V, its value shall be substituted in the formula:

$$H = \frac{VQ}{Ib}$$

6.5.7.3 In determining the vertical reaction V, the following deductions in loads may be made:

a) Consideration shall be given to the possible distribution of load to adjacent parallel beams, if any;

b) All uniformly distributed loads within a distance equal to the depth of the beam from the edge of the nearest support may be neglected except in case of beam hanging downwards from a particular support; and

c) All concentrated loads in the vicinity of the supports may be reduced by the reduction factor applicable according to Table 12.

Table 12 Reduction Factor for Concentrated Loads in the Vicinity of Supports

[*Clause* 6.5.7.3 (c)]

Distance of Load from the Nearest Support	1.5 D or Less	2 D	2.5 D	3 D or More
(1)	(2)	(3)	(4)	(5)
Reduction factor	0.60	0.40	0.20	No reduction

NOTE — For intermediate distances, factor may be obtained by linear interpolation.

6.5.7.4 Unless the local stress is calculated and found to be within the permissible stress, flexural member shall not be cut, notched or bored except as follows:

a) Notches may be cut in the top or bottom neither deeper than one-fifth of the depth of the beam nor farther from the edge of the support than one-sixth of the span;

b) Holes not larger in diameter than one quarter of the depth may be bored in the middle third of the depth and length, and

c) If holes or notches occur at a distance greater than three times the depth of the member from the edge of the nearest support, the net remaining depth shall be used in determining the bending strength (*see* Fig. 1)

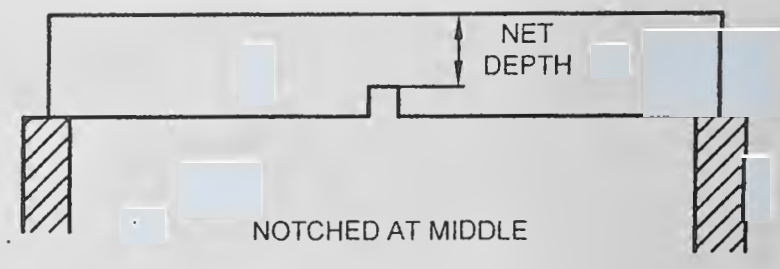

FIG. 1 NOTCHED BEAMS

6.5.8 *Bearing*

6.5.8.1 The ends of flexural members shall be supported in recesses which provide adequate ventilation to prevent dry rot and shall not be enclosed. Flexural members except roof timbers which are supported directly on masonry or concrete shall have a length of bearing of not less than 75 mm. Members supported on corbels, offsets and roof timbers on a wall shall bear immediately on and be fixed to wall-plate not less than 75 mm × 40 mm.

6.5.8.2 Timber joists or floor planks shall not be supported on the top flange of steel beams unless the bearing stress, calculated on the net bearing as shaped to fit the beam, is less than the permissible compressive stress perpendicular to the grain.

6.5.8.3 *Bearing stress*

6.5.8.3.1 *Length and position of bearing*

a) At any bearing on the side grain of timber, the permissible stress in compression perpendicular to the grain, f_{cn}, is dependent on the length and position of the bearing.

b) The permissible stresses given in Table 1 for compression perpendicular to the grain are also the permissible stresses for any length at the ends of a member and for bearings 150 mm or more in length at any other position.

c) For bearings less than 150 mm in length located 75 mm or more from the end of a member as shown in Fig. 2, the permissible stress may be multiplied by the modification factor K_7 given in Table 13.

d) No allowance need be made for the difference in intensity of the bearing stress due to bending of a beam.

e) The bearing area should be calculated as the net area after allowance for the amount of wane.

f) For bearings stress under a washer or a small plate, the same coefficient specified in Table 13 may be taken for a bearing with a length equal to the diameter of the washer or the width of the small plate.

g) When the direction of stress is at angle to the direction of the grain in any structural member, then the permissible bearing stress in that member shall be calculated by the following formula:

$$f_{c\theta} = \frac{f_{cp} \times f_{cn}}{f_{cp} \sin^2 \theta + f_{cn} \cos^2 \theta}$$

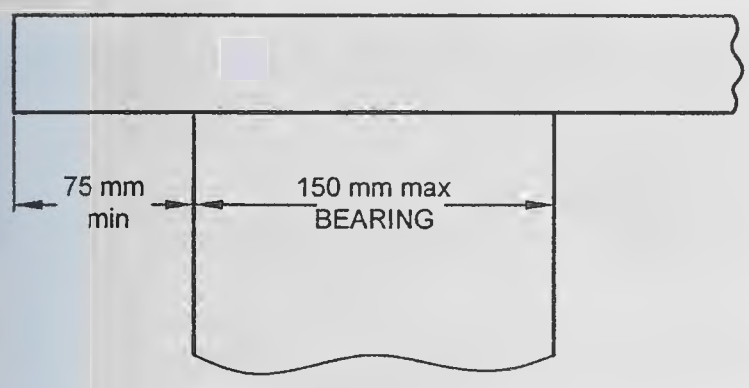

FIG 2. POSITION OF END BEARINGS

Table 13 Modification Factor K_7 for Bearing Stresses

[*Clause* 6.5.8.3.1 (c) *and* (f)]

Length of Bearing mm	15	25	40	50	75	100	150 or more
(1)	(2)	(3)	(4)	(5)	(6)	(7)	(8)
Modification factor, K_7	1.67	1.40	1.25	1.20	1.13	1.10	1.00

6.5.9 Purlin is a structural member, essentially a beam subjected to transverse loads and rests on the top chord of roof truss. Being under bi-axial bending, vertical loads are resolved into two components, that is, perpendicular to and parallel to roof slopes (*see* Fig. 3). The effect of normal and tangential components of the vertical load is worked out separately and the in fibre stress in bending, will be the algebraic sum of both.

6.5.10 *Deflection*

The deflection in the case of all flexural members supporting brittle materials like gypsum ceilings, slates, tiles and asbestos sheets shall not exceed 1/360 of the span. The deflection in the case of other flexural members shall not exceed 1/240 of the span and 1/150 of the freely hanging length in the case of cantilevers.

6.5.10.1 Usual formula for deflection shall apply:

$$\delta = \frac{KWL^3}{EI}$$ (ignoring deflection due to shear strain)

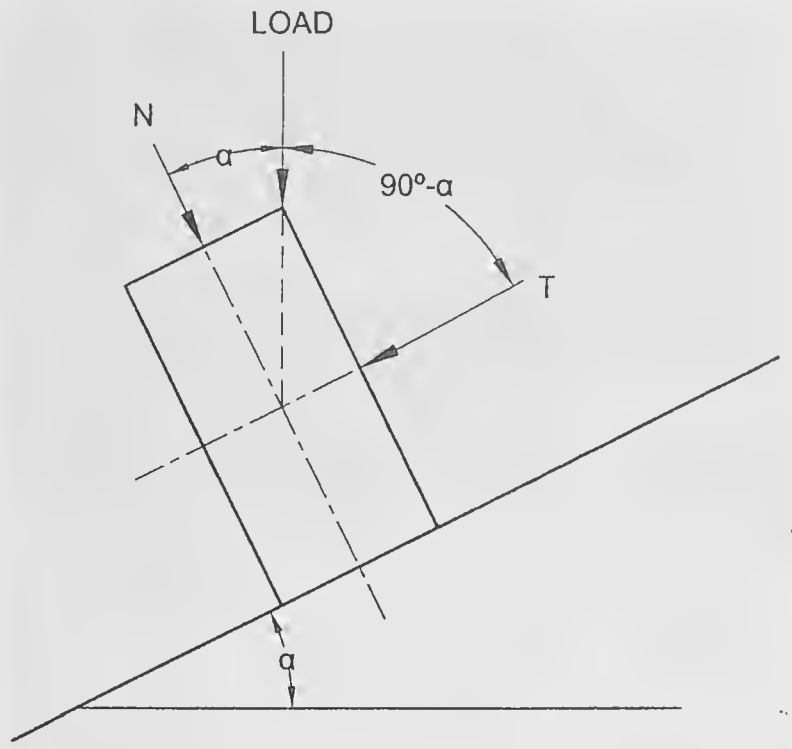

FIG. 3 PURLIN

K-values = 1/3 for cantilevers with load at free end,
= 1/8 for cantilevers with uniformly distributed load,
= 1/48 for beams supported at both ends with point load at centre, and
= 5/384 for beams supported at both ends with uniformly distributed load.

6.5.10.2 In order to allow the effect of long duration loading on *E*, for checking deflection in case of beams and joists the effective loads shall be twice the dead load if timber is initially dry.

NOTE — The tendency of flexural members to acquire larger permanent deflections under long continued loadings has to be taken care of either by considering double the dead load in calculations of deflection or by giving a factor of safety to MOE.

6.5.10.3 Self weight of beam shall be considered in design.

6.6 Columns

NOTE — The formulae given are for columns with pin end conditions and the length shall be modified suitably with other end conditions.

6.6.1 *Solid Columns*

Solid columns shall be classified into short, intermediate and long columns depending upon their slenderness ratio (*S/d*) as follows:

a) *Short columns* — Where *S/d* does not exceed 11,

b) *Intermediate columns* — Where *S/d* is between 11 and K_8, and

c) *Long columns* — Where *S/d* is greater than K_8.

6.6.1.1 For short columns, the permissible compressive stress shall be calculated as follows:

$$f_c = f_{cp}$$

6.6.1.2 For intermediate columns, the permissible compressive stress is calculated by using the following formula:

$$f_c = f_{cp}\left[1-\frac{1}{3}\left(\frac{S}{K_8 d}\right)^4\right]$$

6.6.1.3 For long columns, the permissible compressive stress shall be calculated by using the following formula:

$$f_c = \frac{0.329E}{\left(S/d\right)^2}$$

6.6.1.4 In case of solid columns of timber, *S/d* ratio shall not exceed 50.

6.6.1.5 The permissible load on a column of circular cross section shall not exceed that permitted for a square column of an equivalent cross sectional area, where side of square is equal to 0.886 times the diameter

6.6.1.6 For determining *S/d* ratio of a tapered column, such as for wooden poles, its least dimension shall be taken as the sum of the corresponding least dimensions at the small end of the column and one-third of the difference between this least dimension at the small end and the corresponding least dimension at the large end, but in no case shall the least dimension for the column be taken as more than one and a half times the least dimension at the small end. The induced stress at the small end of the tapered column shall not exceed the permissible compressive stress in the direction of grain.

6.6.2 *Built-Up Columns*

6.6.2.1 *Box column*

Box columns shall be classified into short, intermediate and long columns as follows:

a) *Short columns* — Where $\frac{S}{\sqrt{d_1^2+d_2^2}}$ is less than 8;

b) *Intermediate columns* — Where $\frac{S}{\sqrt{d_1^2+d_2^2}}$ is between 8 and K_9; and

c) *Long columns* — Where $\frac{S}{\sqrt{d_1^2+d_2^2}}$ is greater than K_9;

6.6.2.2 For short columns, the permissible compressive stress shall be calculated as follows:

$$f_c = qf_{cp}$$

6.6.2.3 For intermediate columns, the permissible compressive stress shall be obtained using the following formula:

$$f_c = qf_{cp}\left[1-\frac{1}{3}\left(\frac{S}{K_9\sqrt{d_1^2+d_2^2}}\right)^4\right]$$

6.6.2.4 For long columns, the permissible compressive stress shall be calculated by using the following formula:

$$f_c = \frac{0.329\,UE}{\left(\frac{S}{\sqrt{d_1^2+d_2^2}}\right)^2}$$

6.6.2.5 The following values of *U* and *q*, depending upon plank thickness (*t*) in **6.6.2.3** and **6.6.2.4**, shall be used for width of plank not greater than 5 times the plank thickness:

t mm	*U*	*q*
25	0.80	1.00
50	0.60	1.00

6.6.3 *Spaced Columns*

6.6.3.1 The formulae for solid columns as specified in **6.6.1** are applicable to spaced columns with a restraint factor of 2.5 or 3, depending upon distances of end connectors in the column.

NOTE — A restrained factor of 2.5 for location of centroid group of fasteners at *S*/20 from end and 3 for location at *S*/10 to *S*/20 from end shall be taken.

6.6.3.2 For intermediate spaced column, the permissible compressive stress shall be:

$$f_c = f_{cp}\left[1-\frac{1}{3}\left(\frac{S}{K_{10}d}\right)^4\right]$$

6.6.3.3 For long spaced columns, the permissible compressive stress shall be:

$$f_c = \frac{0.329E\times 2.5}{(S/d)^2}$$

6.6.3.4 For individual members of spaced columns, *S/d* ratio shall not exceed 80.

6.6.4 Compression members shall not be notched. When it is necessary to pass services through such a member, this shall be effected by means of a bored hole provided that the local stress is calculated and found to be within the permissible stress specified. The distance from the edge of the hole to the edge of the member shall not be less than one quarter of width of the face.

6.7 Tension Member (Ties)

The stress is axial tension parallel to grain of wood shall be calculated on the basis of net-section area which shall not exceed the safe permissible value in tension parallel to grain

$$f_{at} = \frac{\text{Maximum force prevailing}}{\text{Area of cross-section}} \leq f_t$$

6.8 Structural Members Subject to Bending and Axial Stresses

6.8.1 Structural members subjected both to bending and axial compression shall be designed to comply with the following:

$$\frac{f_{ac}}{f_c} + \frac{f_{ab}}{f_b} \text{ is not greater than 1.}$$

6.8.2 Structural members subjected both to bending and axial tension shall be designed to comply with the following:

$$\frac{f_{at}}{f_t} + \frac{f_{ab}}{f_b} \text{ is not greater than 1.}$$

6.9 Timber Roof Truss

Trusses are framed structures in which separate straight members are so arranged and connected at their ends that members form triangles. The external loads cause direct stresses in the members. Essentially a plane structure which is very stiff in the plane of the members but very flexible in every other direction. For members subjected to reversal of stresses, design has to be for one stress and tested for the other applied at the panel points. Eccentricity of meeting members at joint may result in the increased stresses in design.

7 DESIGN OF COMMON STEEL WIRE NAIL JOINTS

7.1 General

Nail jointed timber construction is suitable for light and medium timber framings (trusses, etc) up to 15 m spans. With the facilities of readily available materials and simpler workmanship in mono-chord and split-chord constructions, this type of fabrication has a large scope. Preboring of nail-jointed timber construction is desirable and shall be done in accordance with good practice as in, **6.2.2** and Table 3 of good practice [6-3A(7)].

7.2 Dimensions of Members

The dimension of an individual piece of timber (that is any single member) shall be within the range given below:

a) The minimum thickness of the main members in mono-chord construction shall be 30 mm.

b) The minimum thickness of an individual piece of members in split-chord construction shall be 20 mm for web members and 25 mm for chord members.

c) The space between two adjacent pieces of timber shall be restricted to a maximum of 3 times the thickness of the individual piece of timber of the chord member. In case of web members, it may be greater for joining facilities.

7.3 No lengthening joint shall preferably be located at a panel point. Generally not more than two, but preferably one, lengthening joint shall be permitted between the two panel points of the members.

7.4 Specification and Diameter of Nails

7.4.1 The nails used for timber joints shall conform to Part 5 'Building Materials' of the Code. The nails shall be diamond pointed.

7.4.2 The diameter of nail shall be within the limits of one-eleventh to one-sixth of the least thickness of members being connected.

7.4.3 Where the nails are exposed to be saline conditions, common wire nails shall be galvanized.

7.5 Arrangement of Nails in the Joints

The end distances, edge distances and spacings of nails in a nailed joint should be such as to avoid undue splitting of the wood and shall not be less than those given in **7.5.1** and **7.5.2.**

7.5.1 *Lengthening Joints*

The requirement of spacing of nails in a lengthening joint shall be as given in Table 14 (*see also* Fig. 4):

Table 14 Spacing of Nails

(*Clause* 7.5.1)

Sl No.	Spacing of Nails	Type of Stress in the Joint	Requirement *Min*
(1)	(2)	(3)	(4)
i)	End distance	Tension	12 *n*
		Compression	10 *n*
ii)	In direction of grain	Tension	10 *n*
		Compression	5 *n*
iii)	Edge distance	—	5 *n*
iv)	Between row of nails perpendicular to the grain	—	5 *n*

NOTES

1 *n* is shank diameter of nails.

2 The 5*n* distance between rows perpendicular to the grain may be increased subject to the availability of width of the member keeping edge distance constant.

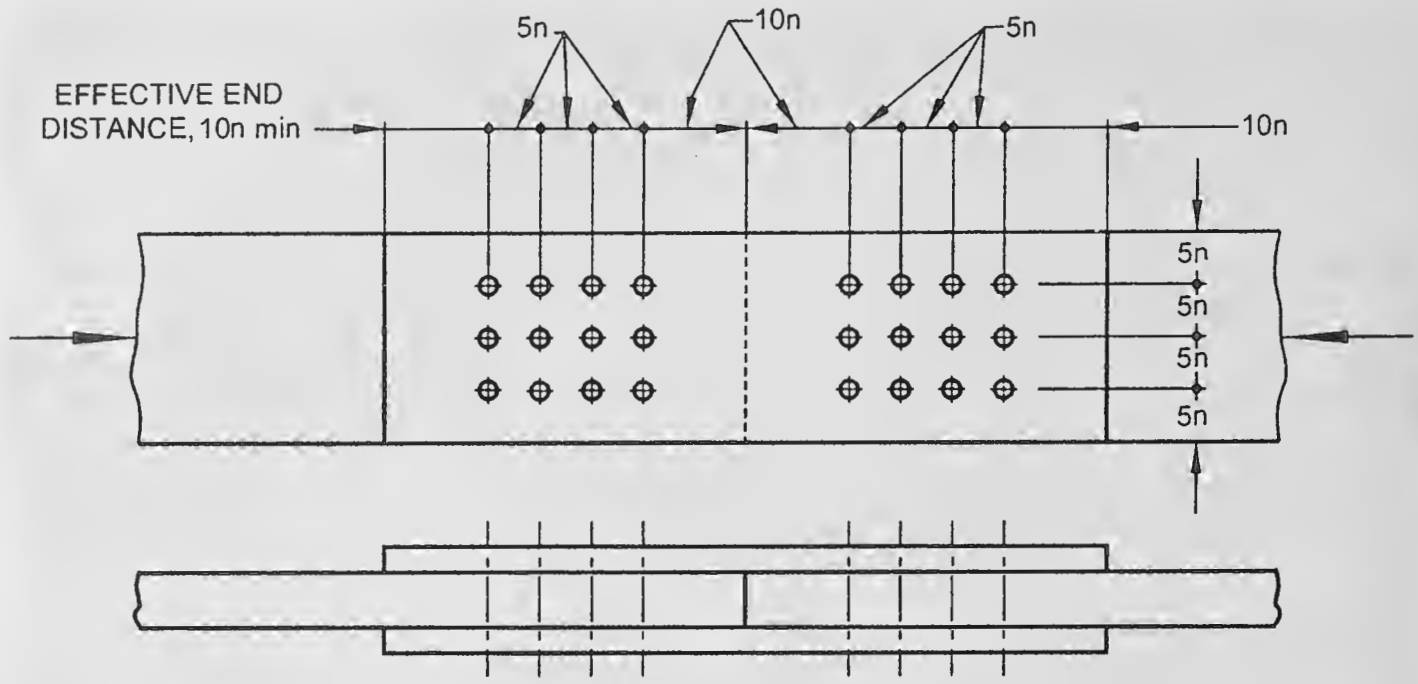

4A Monochord Type Butt Joint Subject to Compression

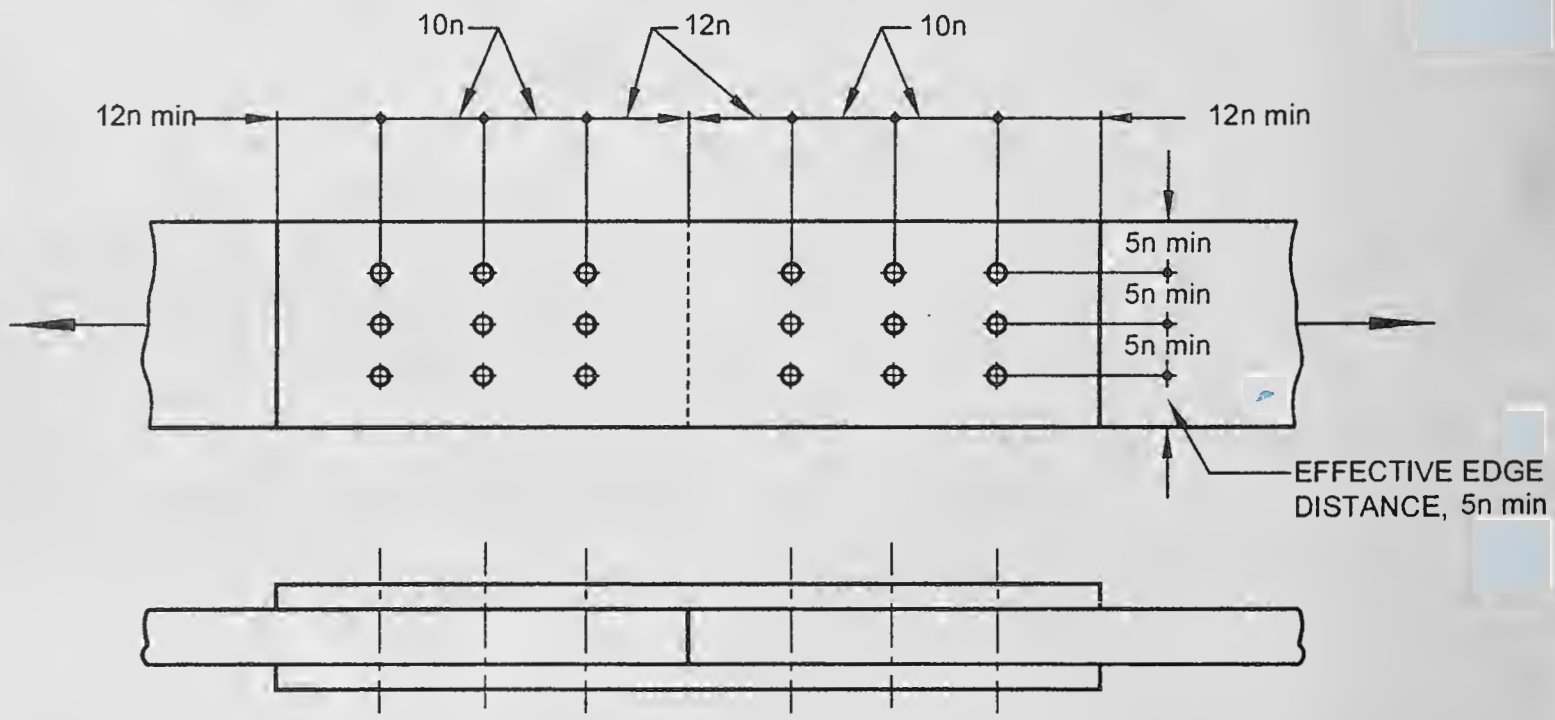

n = SHANK DIAMETER OF NAIL

4B Monochord Type Butt Joint Subject to Tension

FIG. 4 SPACING OF NAILS IN A LENGTHENING JOINT — (*Continued*)

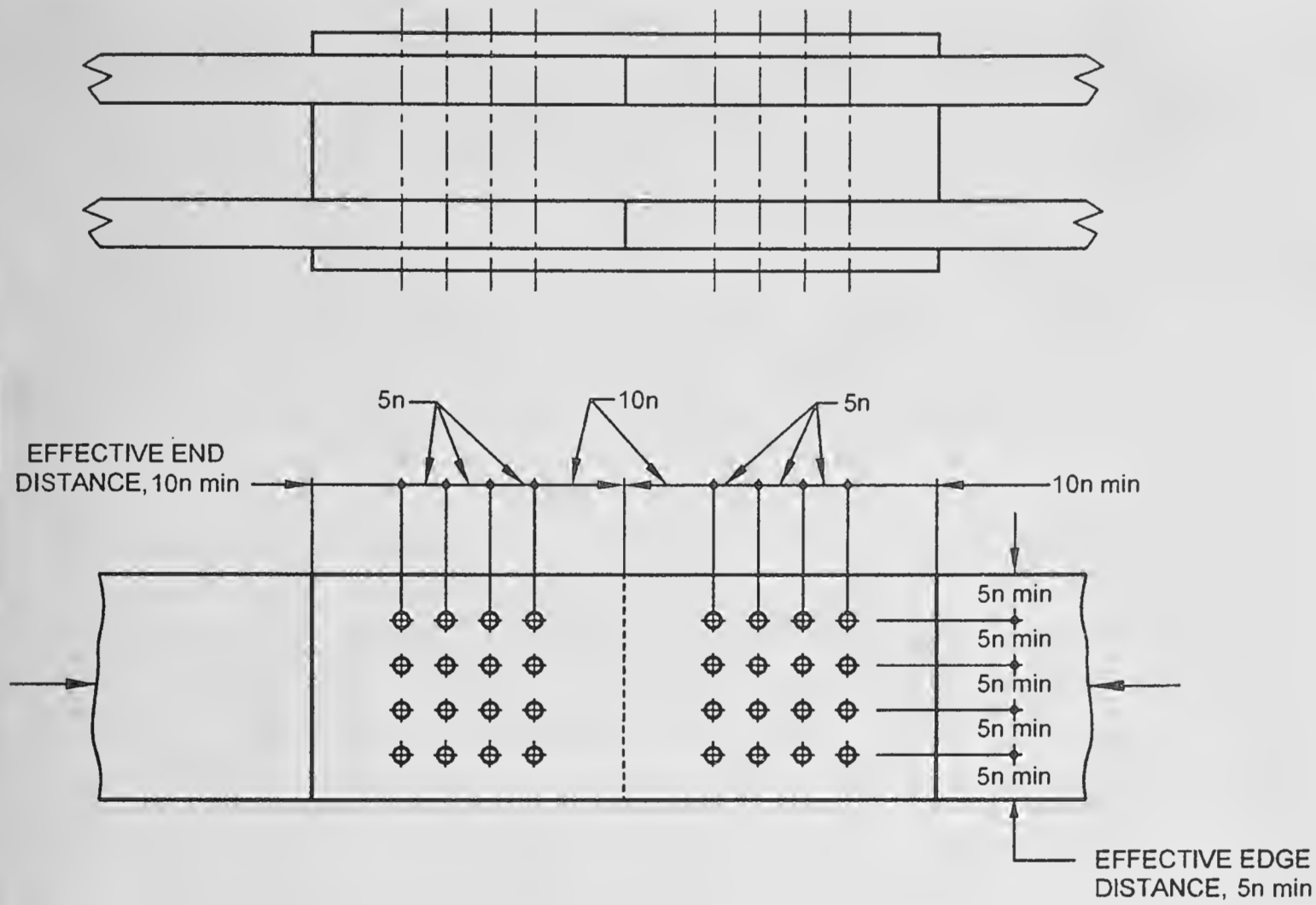

4C Split - Chord Type Butt Joint Subject to Compression

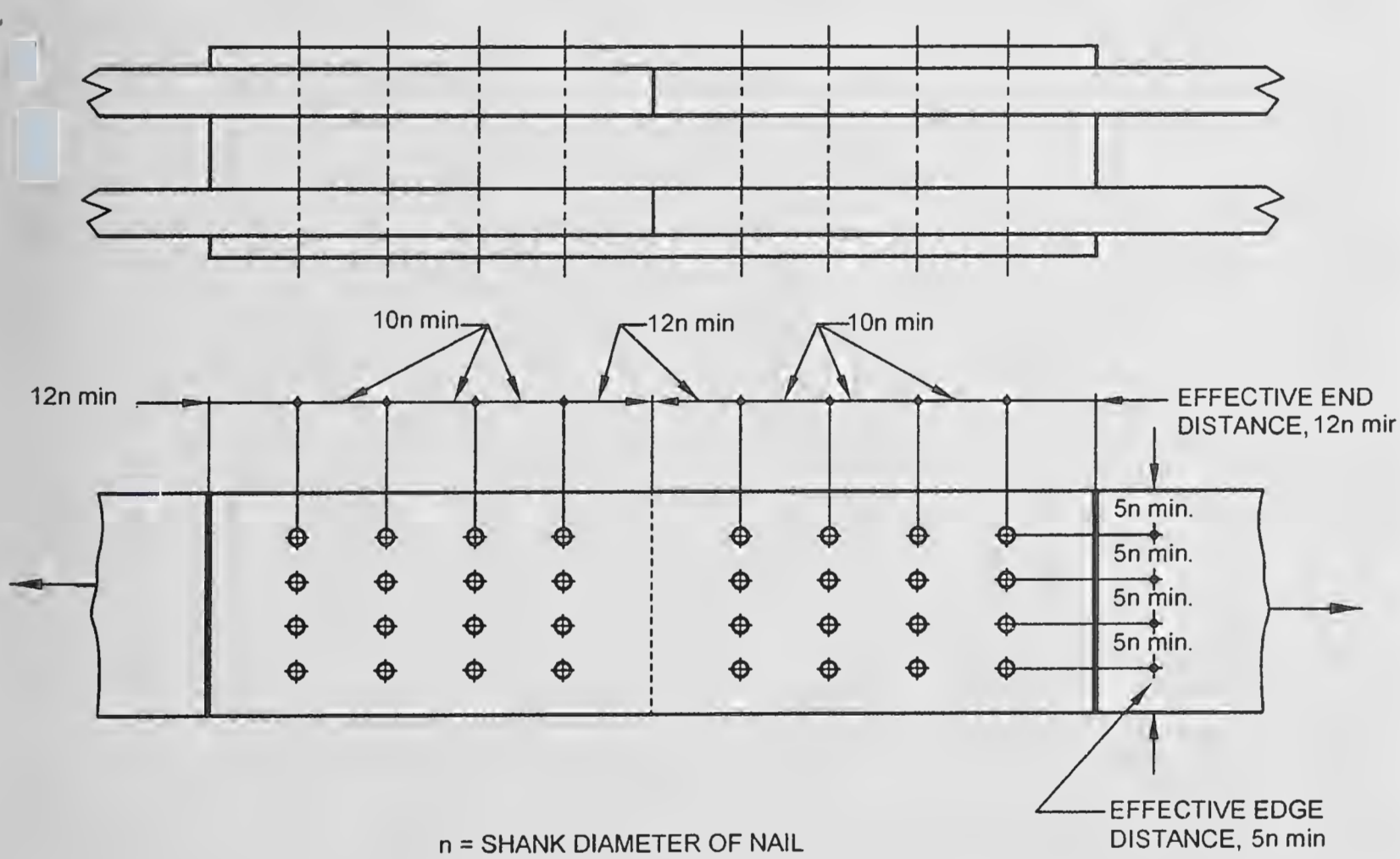

n = SHANK DIAMETER OF NAIL

4D Split - Chord Type Butt Joint Subject to Tension

FIG. 4 SPACING OF NAILS IN A LENGTHENING JOINT

7.5.2 *Node Joints*

The requirement for spacing of nails in node joints shall be as specified in Fig. 5 where the members are at right angle and as in Fig. 6 where the members are inclined to one another at angles other than 90° and subjected to either pure compression or pure tension.

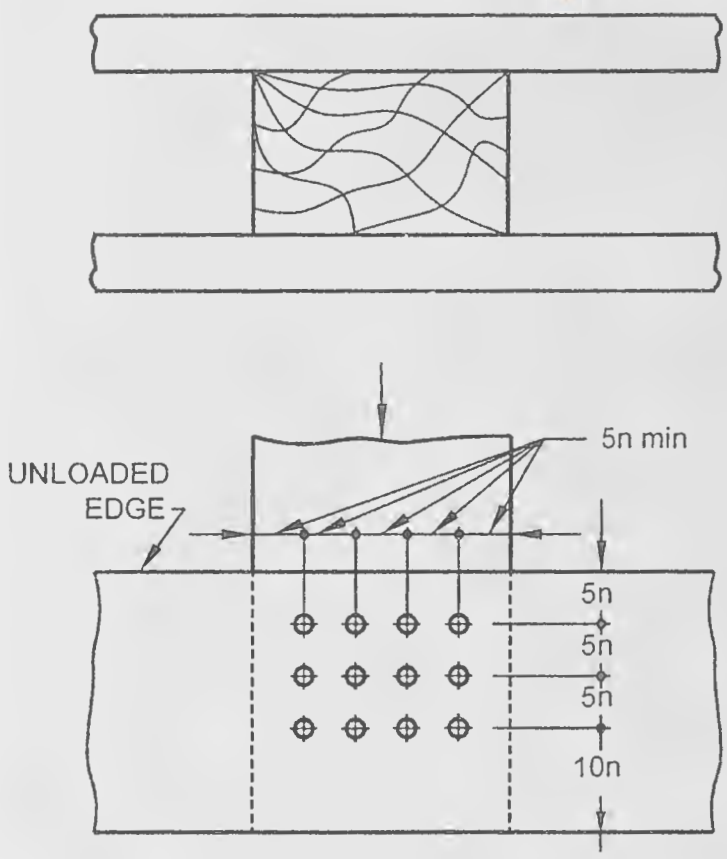

5A

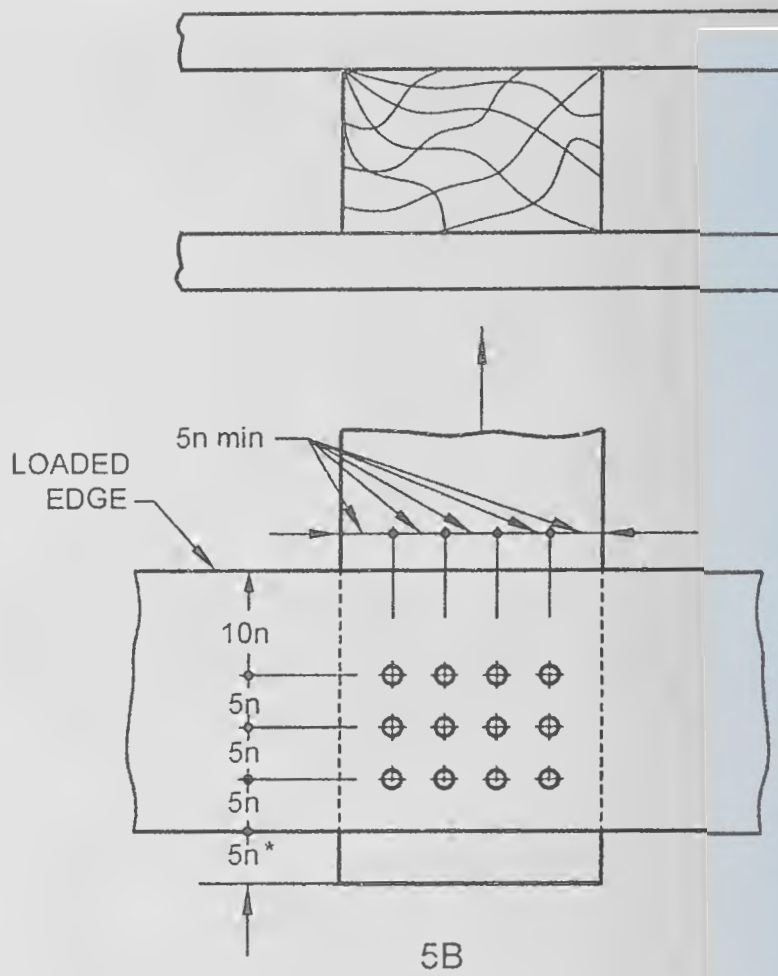

5B

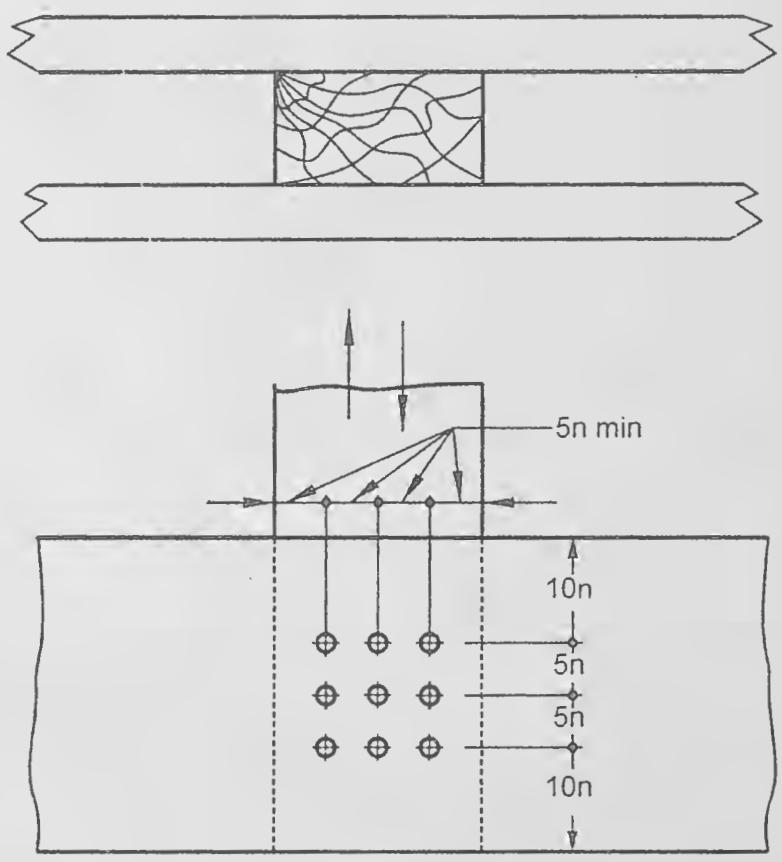

5C

n = SHANK DIAMETER OF NAIL

*5n may be increased to 10n, if the designed width of chord member permits. Otherwise the end of the loaded web member may be extended by 5n minimum.

FIG. 5 SPACING OF NAILS WHERE MEMBERS ARE AT RIGHT ANGLES TO ONE ANOTHER

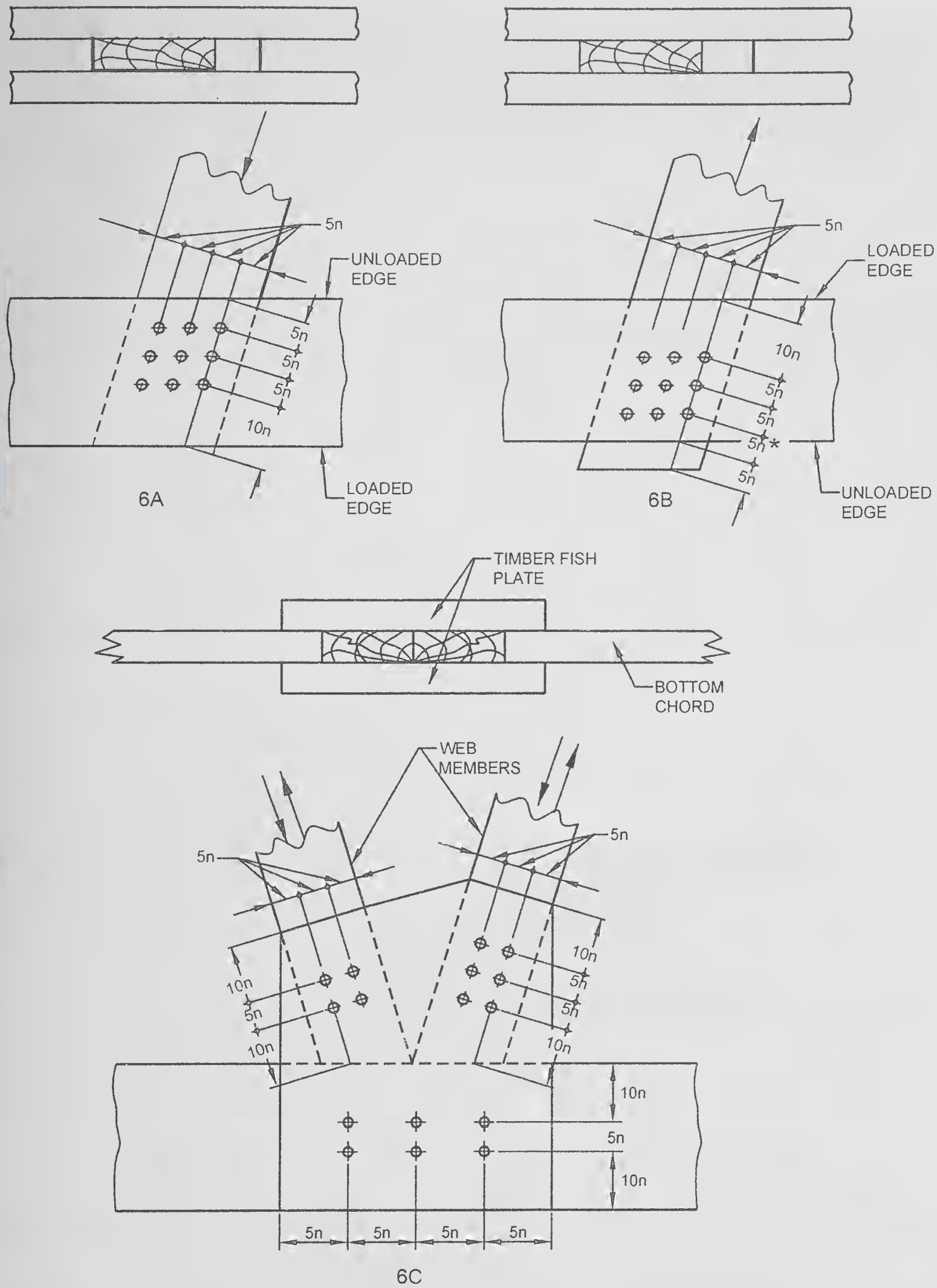

n = SHANK DIAMETER OF NAIL

*5n may be increased to 10n, if the designed width of chord member permits. Otherwise the end of the loaded web member may be extended by 5n minimum.

FIG. 6 SPACING OF NAILS AT NODE JOINTS WHERE MEMBERS ARE INCLINED TO ONE ANOTHER

7.6 Penetration of Nails

7.6.1 For a lap joint when the nails are driven from the side of the thinner member, the length of penetration of nails in the thicker member shall be one and a half times the thickness of the thinner member subject to maximum of the thickness of the thicker member.

7.6.2 For butt joints the nails shall be driven through the entire thickness of the joint.

7.7 Design Considerations

7.7.1 Where a number of nails are used in a joint, the allowable load in lateral resistance shall be the sum of the allowable loads for the individual nails, provided that the centroid of the group of these nails lies on the axis of the member and the spacings conform to **7.5**. Where a large number of nails are to be provided at a joint, they should be so arranged that there are more of rows rather than more number of nails in a row.

7.7.2 Nails shall, as far as practicable, be arranged so that the line of force in a member passes through the centroid of the group of nails. Where this is not practicable, allowance shall be made for any eccentricity in computing the maximum load on the fixing nails as well as the loads and bending moment in the member.

7.7.3 Adjacent nails shall preferably be driven from opposite faces, that is, the nails are driven alternatively from either face of joint.

7.7.4 For a rigid joint, a minimum of 2 nails for nodal joints and 4 nails for lengthening joint shall be driven.

7.7.5 Two nails in a horizontal row are better than using the same number of nails in a vertical row.

7.7.6 The permissible lateral strength (in double shear) of mild steel common wire for different species of timber shall be as per **4.3**.

7.8 Special Consideration in Nail-Jointed Truss Construction

7.8.1 The initial upward camber provided at the centre of the lower chord of nail-jointed timber trusses shall be not less than 1/200 of the effective span for timber structures using seasoned wood and 1/100 for unseasoned or partially seasoned wood.

7.8.2 The total combined thickness of the gusset or splice plates on either side of the joint in a mono-chord type construction shall not be less than one and a half times the thickness of the main members subject to a minimum thickness of 25 mm of individual gusset plate.

NOTES

1 The allowable load or lateral strength values of nails shall be those as given in Table 2 and Table 3.

2 The strength data for joints given in the Subsection apply to gusset or splice or fish plates of solid wood; however, materials other than solid wood may be used for gusset when field tests are made and their strength requirements have been established.

7.8.3 The total combined thickness of all spacer blocks or plates or both including outer splice plates, at any joint in a split-chord type construction shall not be less than one and a half times the total thickness of all the main members at that joint.

7.9 Fabrication

The fabrication of nail-jointed timber construction shall be done in accordance with good practice [6-3A(7)].

8 DESIGN OF NAIL LAMINATED TIMBER BEAMS

8.1 Method of Arrangement

8.1.1 The beam shall be made up of 20 mm to 30 mm thick planks placed vertically with joints staggered in the adjoining planks with a minimum distance of 300 mm. The planks are laminated with the help of wire nails at regular intervals to take up horizontal shear developed in the beam besides keeping the planks in position (*see* Fig. 7).

8.1.2 The advantage in laminations lies in dimensional stability, possible dispersal of defects and better structural performance.

8.2 Sizes of Planks and Beams

8.2.1 The plank thickness for fabrication of nailed laminated beams recommended are 20, 25 and 30 mm.

8.2.2 In case of nailed laminated timber beam the maximum depth and length of planks shall be limited to 250 mm and 2 000 mm, respectively.

8.2.3 In order to obtain the overall width of the beam, the number and thickness of planks to form vertical nailed laminated beams, and also type and size of wire nail shall be as mentioned in Table 15. The protruding portion of the nail shall be cut off or clenched across the grains.

8.3 Design Considerations

8.3.1 Nail laminated beams shall be designed in accordance with **6** and provisions in the good practice [6-3A(8)].

8.3.1.1 The deflection in the case of nailed laminated timber beams, joists, purlins, battens and other flexural members supporting brittle materials like gypsum, ceiling slates, tiles and asbestos sheets shall not exceed 1/480 of the span. The deflection in case of other flexural members shall not exceed 1/360 of the span in the case of beams and joists, and 1/225 of the freely hanging length in case of cantilevers.

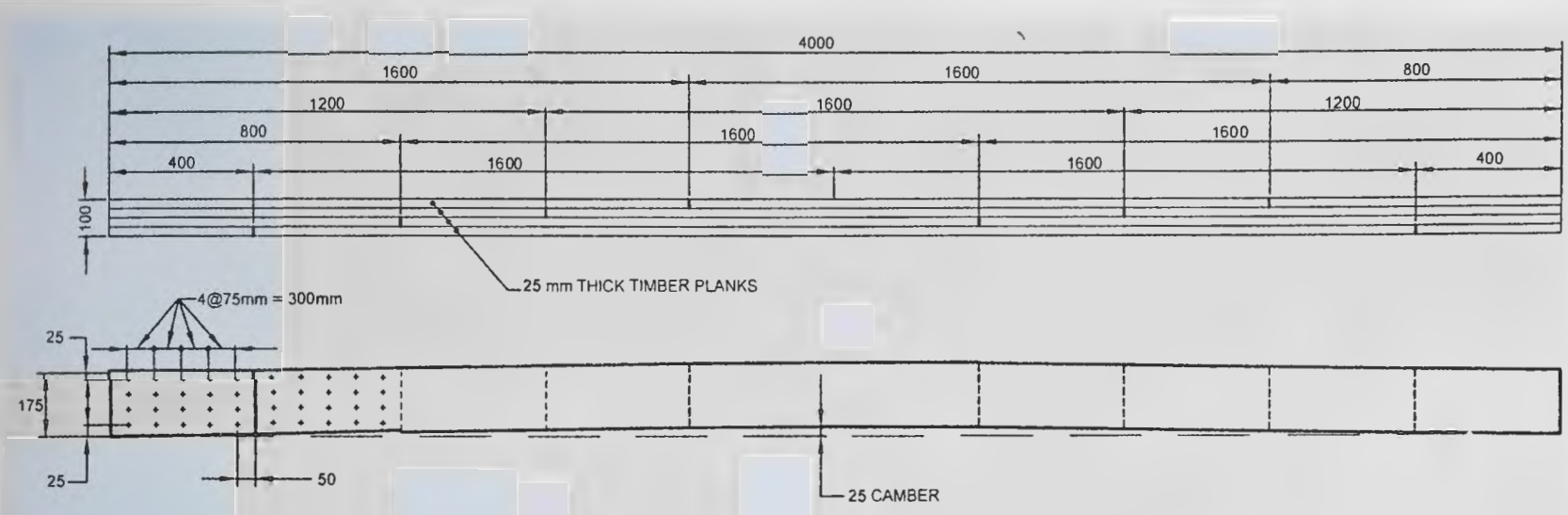

All dimensions in millimetres.

FIG. 7 PLAN AND ELEVATION OF A TYPICAL NAILED LAMINATED TIMBER BEAM

8.3.2 Permissible lateral strength of diamond pointed mild steel wire nails shall be as given in Table 2 and Table 3 for Indian species of timber, which shall apply to nails that have their points cut flush with the faces. For nails clenched across the grains the strength may be increased by 20 percent over the values for nails with points cut flush.

Table 15 Number and Size of Planks and Nails for Nailed Laminated Beams

(*Clause* 8.2.3)

Sl No.	Overall Width of Beam	No. of Planks	Thickness of Each Plank	Type and Size of Nail to be Used
	mm		mm	mm
(1)	(2)	(3)	(4)	(5)
i)	50	2	25	80 long 3.55 dia
ii)	60	3	20	- do -
iii)	70	3	(2 x 25) (1 x 20)	- do -
iv)	80	4	20	100 long 4.0 dia
v)	90	3	30	- do -
vi)	100	4	25	125 long 5.0 dia
vii)	110	4	(3 x 30) (1 x 20)	- do -
viii)	120	4	30	- do -
ix)	150	5	30	150 long 5.0 dia

NOTE — A number of combinations of the different thickness of planks may be adopted as long as the minimum and maximum thickness of the planks are adhered to.

8.3.3 *Arrangement of Nails*

8.3.3.1 A minimum number of four nails in a vertical row at regular interval not exceeding 75 mm to take up horizontal shear as well as to keep the planks in position shall be used. Near the lengthening joints of the planks this distance may, however, be limited to 50 mm instead of 75 mm.

8.3.3.2 Shear shall be calculated at various points of the beam and the number of nails required shall be accommodated within the distance equal to the depth of the beam, with a minimum of 4 nails in a row at a standard spacing as shown in Fig. 8.

8.3.3.3 If the depth of the beam is more, then the vertical intermediate spacing of nails may be increased proportionately.

8.3.3.4 If the nails required at a point are more than that can be accommodated in a row, then these shall be provided lengthwise of the beam within the distance equal to the depth of the beam at standard lengthwise spacing.

8.3.3.5 For nailed laminated beam minimum depth of 100 mm for 3.55 mm and 4 mm diameter nails, and 125 mm for 5 mm diameter nails shall be provided.

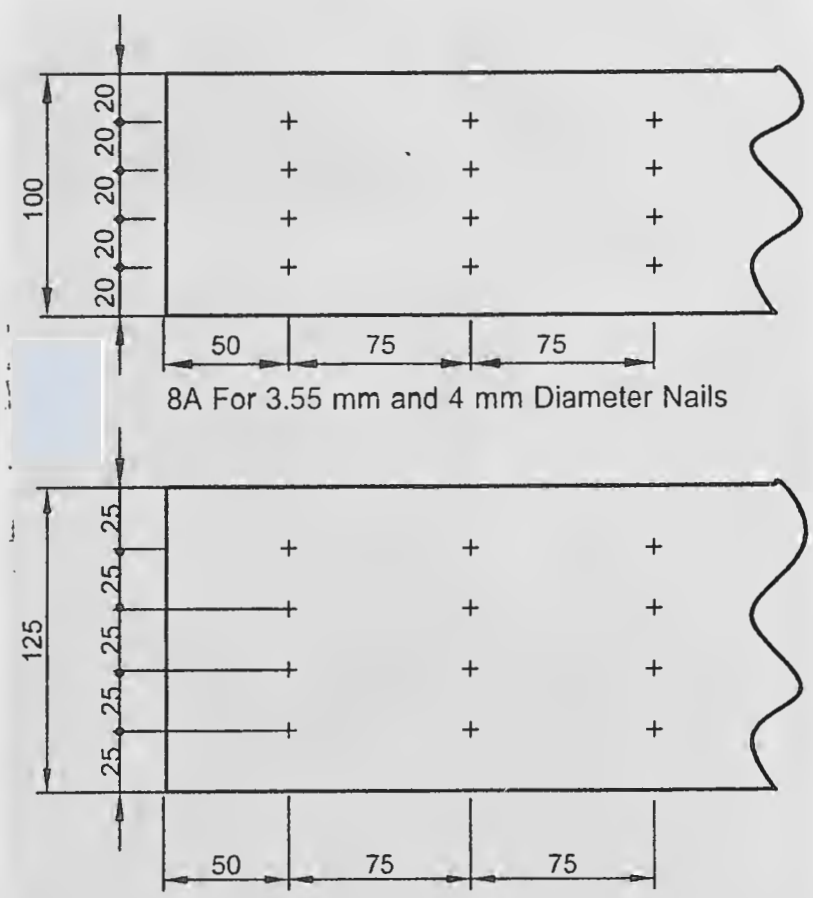

8A For 3.55 mm and 4 mm Diameter Nails

8B For 5 mm diameter Nails

All dimensions in millimetres.

FIG. 8 STANDARD LENGTHWISE SPACING IN NAILED LAMINATED BEAM

8.4 Fabrication

The fabrication of nailed laminated timber beams shall be done in accordance with good practice [6-3A(8)].

9 DESIGN OF BOLTED CONSTRUCTION JOINTS

9.1 General

Bolted joints suit the requirements of prefabrication in small and medium span timber structures for speed and economy in construction. Bolt jointed construction units offer better facilities as regards to workshop ease, mass production of components, transport convenience and re-assembly at site of work particularly in defence sector for high altitudes and far off situations. Designing is mainly influenced by the species, size of bolts, moisture conditions and the inclination of loadings to the grains. In principle, bolted joints follow the pattern of riveted joints in steel structures.

9.2 Design Considerations

9.2.1 Bolted timber construction shall be designed in accordance with **6**. The concept of critical section, that is, the net section obtained by deducting the projected area of bolt-holes from the cross-sectional area of member is very important for the successful design and economy in timber.

9.2.2 *Bolt Bearing Strength of Wood*

The allowable load for a bolt in a joint consisting of two members (single shear) shall be taken as one half the allowable loads calculated for a three member joint (double shear) for the same t'/d_3 ratio. The percentage of safe working compressive stress of timber on bolted joints for different t'/d_3 ratios shall be as given in Table 16.

9.2.2.1 Where a number of bolts are used in a joint, the allowable loads shall be the sum of the allowable loads for the individual bolts.

9.2.2.2 The factors for different bolt diameter used in calculating safe bearing stress perpendicular to grain in the joint shall be as given in Table 17.

9.2.3 *Dimensions of Members*

a) The minimum thickness of the main member in mono-chord construction shall be 40 mm.

b) The minimum thickness of side members shall be 20 mm and shall be half the thickness of main members.

c) The minimum individual thickness of spaced member in split-chord construction shall be 20 mm and 25 mm for webs and chord members, respectively.

Table 16 Percentage of Safe Working Compressive Stress of Timber for Bolted Joints in Double Shear

(*Clause* 9.2.2)

Sl No.	t'/d_3 Ratio	Stress Percentage	
		Parallel to Grain	Perpendicular to Grain
		λ_1	λ_2
(1)	(2)	(3)	(4)
i)	1.0	100	100
ii)	1.5	100	96
iii)	2.0	100	88
iv)	2.5	100	80
v)	3.0	100	72
vi)	3.5	100	66
vii)	4.0	96	60
viii)	4.5	90	56
ix)	5.0	80	52
x)	5.5	72	49
xi)	6.0	65	46
xii)	6.5	58	43
xiii)	7.0	52	40
xiv)	7.5	46	39
xv)	8.0	40	38
xvi)	8.5	36	36
xvii)	9.0	34	34
xviii)	9.5	32	33
xix)	10.0	30	31
xx)	10.5	—	31
xxi)	11.0	—	30
xxii)	11.5	—	30
xxiii	12.0	—	28

Table 17 Bolt Diameter Factor

(*Clause* 9.2.2.2)

Sl No. (1)	Diameter of Bolt mm (2)	Diameter Factor (d_f) (3)
i)	6	5.70
ii)	10	3.60
iii)	12	3.35
iv)	16	3.15
v)	20	3.05
vi)	22	3.00
vii)	25	2.90

9.2.4 *Bolts and Bolting*

a) The diameter of bolt in the main member shall be so chosen to give larger slenderness (t'/d_3) ratio of bolt.

b) There shall be more number of small diameter bolts rather than small number of large diameter bolts in a joint.

c) A minimum of two bolts for nodal joints and four bolts for lengthening joints shall be provided.

d) There shall be more number of rows rather than more bolts in a row.

e) The bolt holes shall be of such diameter that the bolt can be driven easily.

f) Washers shall be used between the head of bolt and wood surface as also between the nut and wood.

9.3 Arrangement of Bolts

9.3.1 The following spacings in bolted joints shall be followed (*see* Fig. 9):

a) *Spacing of bolts in a row* — For parallel and perpendicular to grain loading = 4 d_3

b) *Spacing between rows of bolts*

1) *For perpendicular to grain loading* — 2.5 d_3 to 5 d_3 (2.5 d_3 for t'/d_3 ratio of 2 and 5 d_3 for t'/d_3 ratio of 6 or more. For ratios between 2 and 6 the spaeing shall be obtained by interpolation).

2) *For parallel to grain loading* — At least

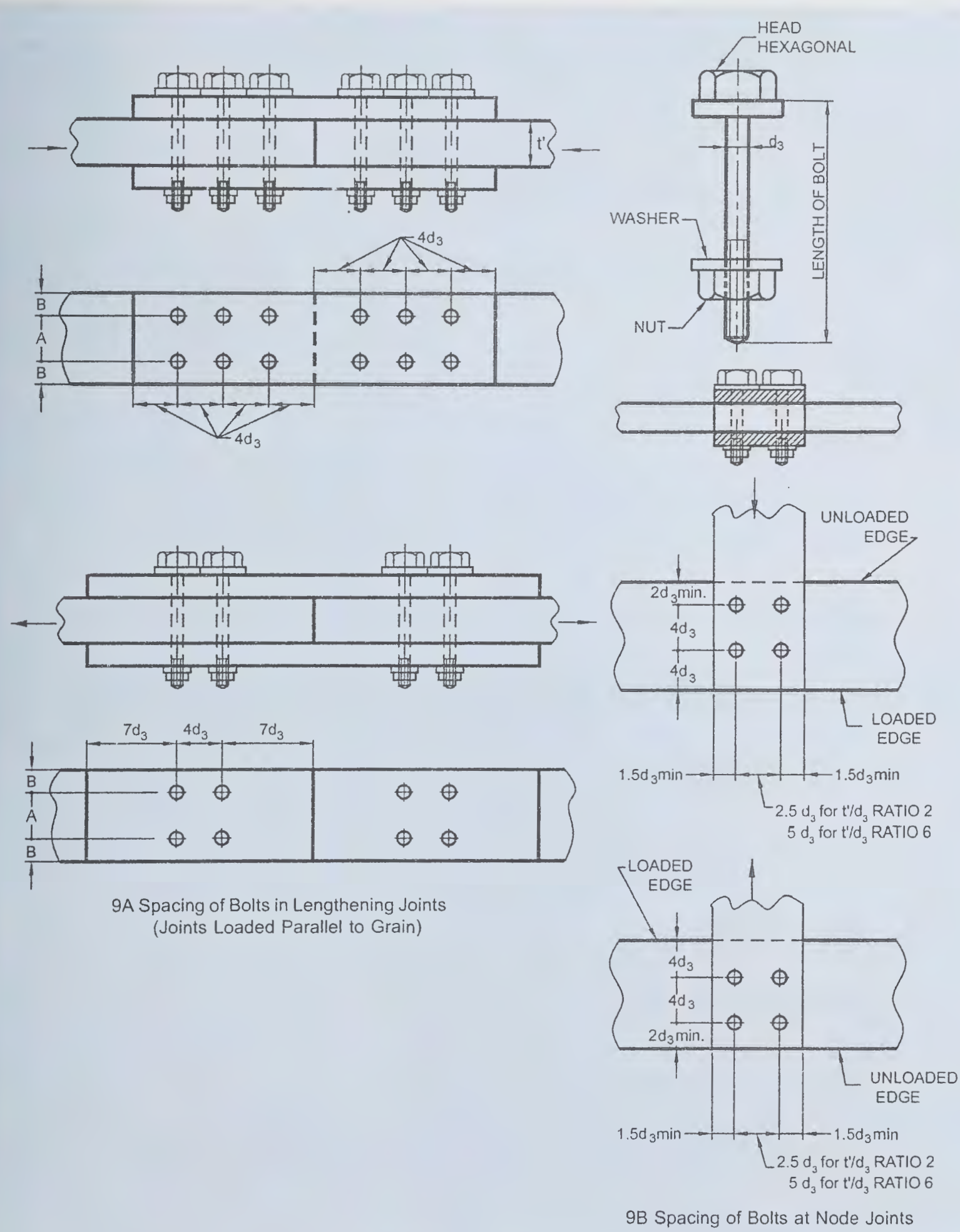

9A Spacing of Bolts in Lengthening Joints
(Joints Loaded Parallel to Grain)

9B Spacing of Bolts at Node Joints

FIG. 9 TYPICAL SPACING OF BOLTS IN STRUCTURAL JOINTS

$(N - 4)\, d_3$ with a minimum of $2.5\, d_3$. Also governed by net area at critical section which should be 80 percent of the total area in bearing under all bolts.

c) *End distance* — $7d_3$ for softwoods in tension, $5\, d_3$ for hardwoods in tension and $4\, d_3$ for all species in compression.

d) *Edge distance*

1) For parallel to grain loading $1.5\, d_3$ or half the distance between rows of bolts, whichever is greater.

2) For perpendicular to grain loading, the loaded edge distance shall be at least $4\, d_3$.

9.3.2 For inclined members, the spacing given above for perpendicular and parallel to grain of wood may be used as a guide and bolts arranged at the joint with respect to loading direction.

9.3.3 The bolts shall be arranged in such a manner so as to pass the centre of resistance of bolts through the intersection of the gravity axis of the members.

9.3.4 Staggering of bolts shall be avoided as far as possible in case of members loaded parallel to grain of wood. For loads acting perpendicular to grain of wood, staggering is preferable to avoid splitting due to weather effects.

9.3.5 *Bolting*

The bolt holes shall be bored or drilled perpendicular to the surface involved. Forcible driving of the bolts shall be avoided which may cause cracking or splitting of members. A bolt hole of 1.0 mm oversize may be used as a guide for preboring.

9.3.5.1 Bolts shall be tightened after one year of completion of structure and subsequently at an interval of two to three years.

9.4 Outline for Design of Bolted Joints

Allowable load on one bolt (unit bearing stress) in a joint with wooden splice plates shall not be greater than value of P, R, F as determined by one of the following equations:

a) *For loads parallel to grain:*

$$P = f_{cp}\, a\, \lambda_1$$

b) *For loads perpendicular to grain:*

$$R = f_{cn}\, a\, \lambda_2\, d_f$$

c) *For loads at an angle to grain:*

$$F = \frac{PR}{P\sin^2\theta + R\cos^2\theta}$$

9.5 Fabrication

The fabrication of bolt jointed construction shall be in accordance with good practice [6-3A(9)].

To meet the specific requirements of 'all-timber construction' for structures where chemical corrosion of steel elements is a problem, and in order to erect anti-magnetic laboratories, sheds, etc, design should be made on the basis of mild steel bolt joints with the following reductions for timber bolts and bamboo pins:

Allowable safe working load per hardwood timber bolt	=	66 percent of the safe working load per mild steel bolt
Safe working load per solid bamboo pin	=	56 percent of the working load per mild steel bolt

10 DESIGN OF TIMBER CONNECTOR JOINTS

10.1 In large span structures, the members have to transmit very heavy stresses requiring stronger jointing techniques with metallic rings or wooden disc-dowels. Improvised metallic ring connector is a split circular band of steel made from mild steel pipes. This is placed in the grooves cut into the contact faces of the timber members to be joined, the assembly being held together by means of a connecting bolt (*see* Fig. 10).

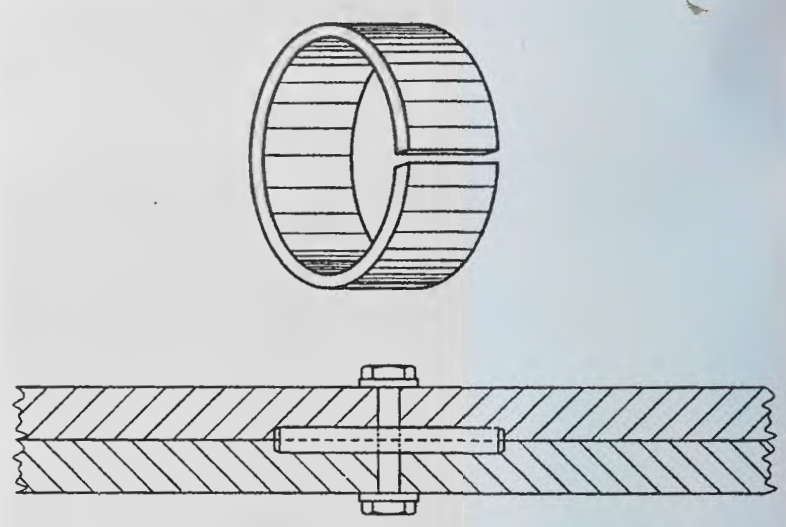

FIG. 10 SPLIT RING CONNECTOR

10.1.1 *Dimensions of Members*

Variation of thickness of central (main) and side members affect the load carrying capacity of the joint. The thickness of main member shall be at least 57 mm and that of side member 38 mm with length and width of members governed by placement of connector at joint.

The metallic connector shall be so placed that the loaded edge distance is not less than the diameter of the connector and the end distance not less than 1.75 times the diameter on the loaded side.

10.1.2 *Design Considerations*

The primary stresses in a split ring connector joint under

tension are illustrated in Fig. 11. The shaded areas represent the part of wood in shear, compression and tension. Related formulae for the same are given in **10.1.2.1**.

For fabrication of structural members, a hole of the required size of the bolt is drilled into the member and a groove is made on the contact faces of the joint.

Theoretical safe loads in design shall be corroborated with sample tests done in accordance with accepted standard [6-3A(10)].

NOTE — A pilot study on determination of strength of improvised split ring connector joint in a compression test for a specific design problem conducted using *Mesua ferrea* (Mesua), yielded the data which is given below, for guidance:

10.1.2.1 Strength of joint is controlled by one or another or combination of three properties:

a) Tension area (*see* Fig. 11A):

$$t_1 w - \left[2\left(\frac{ad_2}{2}\right) + b\left(t_1 - a\right) \right]$$

b) Compression area (*see* Fig. 11B and Fig. 11C):

$$2\left(\frac{ad_2}{2}\right) + b\left(t_1 - a\right)$$

c) Shear area (*see* Fig. 11D):

1) *Within core*: $2\left(\frac{\pi d_1^2}{4}\right)$

No. and Diameter of Ring Used in a Joint		*No. and Size of Bolt Used in a Joint*		*Side Member*		*Central Member*		*Load Direction with respect to Grains of Wood*	*End Distance*	*Inter-mediate Distance*	*Load Per Pair of Connector*
No.	Size mm	No.	Size mm	Thickness mm	Width mm	Thickness mm	Width mm		mm	mm	kgf
(1)	(2)	(3)	(4)	(5)	(6)	(7)	(8)	(9)	(10)	(11)	(12)
2	63	1	12×125	31	92	38	92	Parallel	63	—	3 930
2	63	1	12×125	31	92	38	92	Parallel	75	—	4 185
2	63	1	12×150	38	92	63	92	Parallel	75	—	4 010
2	63	1	12×150	38	117	63	117	Parallel	75	—	4 450
2	63	1	12×125	31	138	38	92	Perpendicular	69	—	2 520
2	63	1	12×125	38	138	38	92	Perpendicular	69	—	3 515
2	100	1	19×175	38	138	66	138	Parallel	100	—	7 075
2	100	1	19×175	38	138	66	138	Parallel	125	—	7 370
2	100	1	19×175	41	138	75	138	Parallel	100	—	7 220
2	100	1	19×175	41	138	75	138	Parallel	125	—	7 645
4	100	2	19×200	38	138	66	138	Parallel	100	150	5 655
4	100	2	19×200	41	138	75	138	Parallel	100	150	5 925
4	100	2	19×200	41	138	75	138	Parallel	125	200	7 135

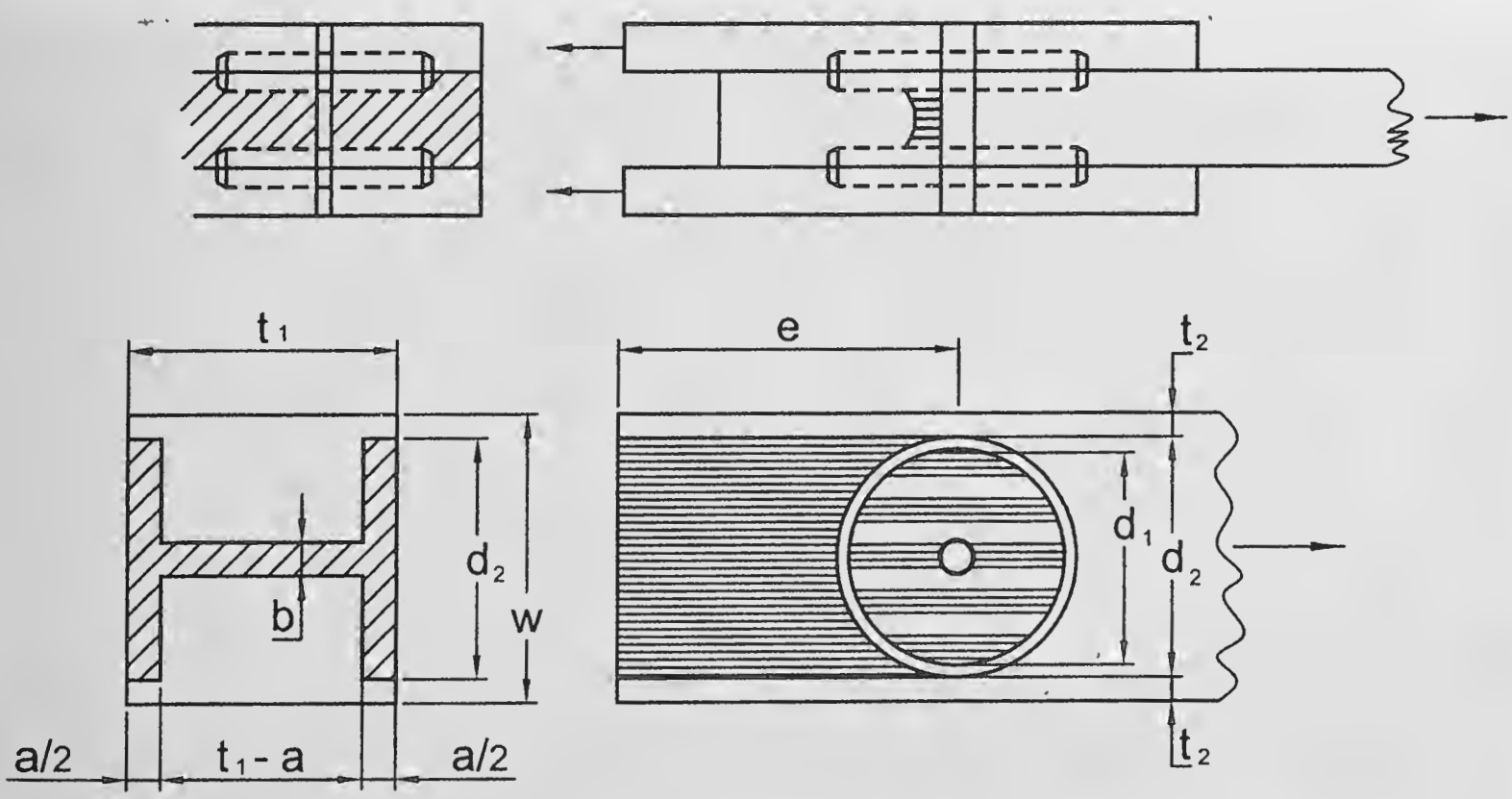

NOTE — Symbols are exclusive to this figure.

FIG. 11 STRESS DISTRIBUTION IN A SPLIT RING CONNECTOR

2) *Below core*:

$$2\left[d_2 e - \frac{1}{2}\left(\frac{\pi d_2^{\,2}}{4}\right) + 2\left(\frac{ae}{2}\right)\right]$$

where

d_1 = inside diameter of connector;
d_2 = outside diameter of connector;
e = end distance from centre of connector to end of member;
a = depth of connector;
b = diameter of bolt;
t_1 = thickness of member;
t_2 = thickness of metal; and
w = width of member;

10.2 Wooden Disc-Dowel

10.2.1 It is a circular hardwood disc generally tapered each way from the middle so as to form a double conical frustum. Such a disc is made to fit into preformed holes (recesses), half in one member and the other half in another, the assembly being held by one mild steel bolt through the centre of the disc to act as a coupling for keeping the jointed wooden members from spreading apart.

As timber always fails by shearing or crushing in front of bolts, the function of disc-dowel incorporated in the joint is to distribute the shearing stresses on a larger area of wood so as to transmit the full amount of stresses.

10.2.2 *Dimensions of Members*

The thickness of dowel may vary from 25 mm to 35 mm and diameter from 50 mm to 150 mm. The diameter of dowel shall be 3.25 to 3.50 times the thickness.

The edge clearance shall range from 12 mm to 20 mm as per the size of the dowel. The end clearance shall be at least equal to the diameter of dowel for joints subjected to tension and three-fourth the diameter for compression joints. Disc dowel shall be turned from radial (quarter sawn) planks of seasoned material.

10.2.3 *Choice of Species*

Wood used for making dowels shall be fairly straight grained, free from excessive liability to shrink and warp, and retain shape well after seasoning and having high shear strength. Species recommended include,

a) Babul,
b) Dhaman,
c) Irul,
d) Sissoo,
e) Rose Wood,
f) Sandal,
g) Axle-Wood,
h) Padauk, and
j) Yon.

NOTE — Data on the above species are as per Table 1.

10.2.4 *Design Considerations*

The forces on dowel in a lap joint and butt joint are illustrated in Fig. 12. Dowel is subjected to shearing at the mid-section, and compression along the grain at the bearing surfaces. For equal strength in both the forces, formula equations are given in the Fig. 12 to determine the size of dowel.

The making of wooden discs may present some problems in the field, but they may be made in small workshop to the specifications of the designer. This is also economically important. Once the wood fittings are shop tailored and made, the construction process in the field is greatly simplified.

Theoretical safe loads in design shall be confirmed through sample tests.

NOTE — Some experimental studies have indicated the following safe loads, in kN, for dowels bearing parallel to the grain, which are given here for guidance only:

Species		*Safe Loads for Dowels Bearing Parallel to the Grain, in* kN *Size of Dowel* (mm)					
Members	Dowels	62 × 25	75 × 25	87 × 25	100 × 31	112 × 37	125 × 37
Sal	Babul	6.671	9.810	13.342	17.805	22.269	27.566
Sal	Sissoo	5.346	7.554	10.251	13.342	16.922	20.895

10.2.4.1 Rigid specifications regarding use of particular planks for fabrication of wooden disc-dowels, and the specific alignment of grains to be in line with grains of members forming the joint, can be relaxed. Application of appropriate factors in design of such joints whatever be the angle of load and members etc, would eliminate risks involved by providing 60 percent more number of dowels at a joint. Thus, decrease the calculated load per dowel to 60 percent.

10.2.4.2 Analysis of variance for safe load in case of dowel joints made with MS bolt, timber bolt, bamboo pin as joiners showed no significant difference. Thus the concept of 'all-timber construction' hold good for chemical industries where corrosion due to acid fumes is a recurring problem.

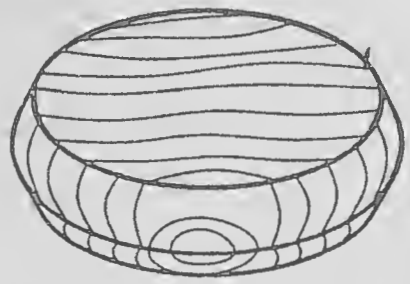

DOWEL

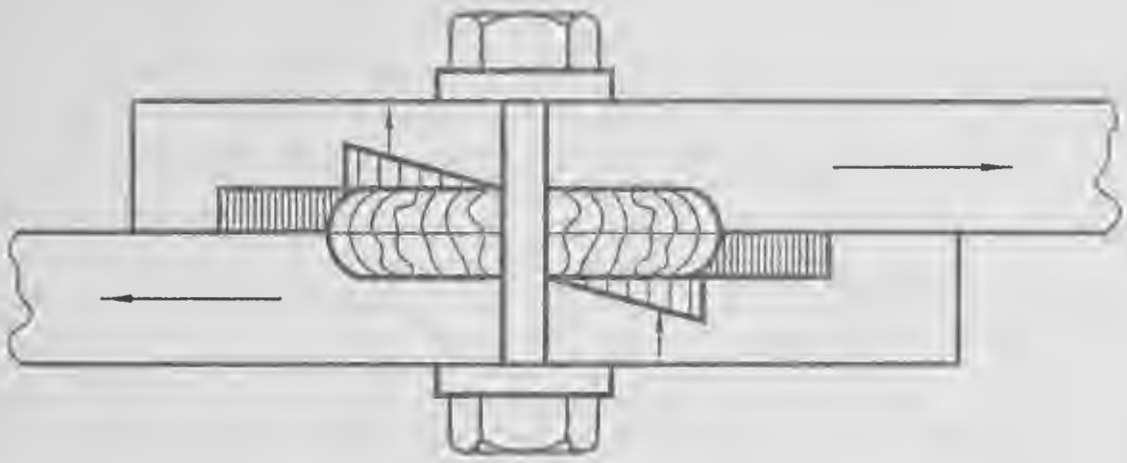

LAP JOINT

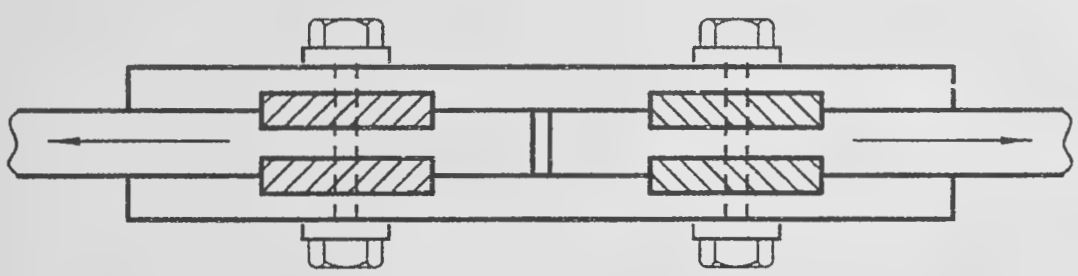

BUTT JOINT

Lap joint : Bolt in simple tension due to clockwise turning moment on dowel.

Butt joint : No tilting moment in dowel due to balancing effect [dowels are in shear (no bending, shearing and tensile stress on bolts)]

Size of dowel for equal strength in both shearing and bearing.

$$\frac{\pi d^2}{4} \times S = d \times \frac{t}{2} \times c$$

where

d = mid diameter of the dowel,

t = thickness of dowel,

s = safe working stress in shear along grain, and

c = safe compressive stress along grain.

NOTE — Symbols are exclusive to this figure.

FIG. 12 DISTRIBUTION OF FORCES IN DOWEL JOINT

11 GLUED LAMINATED CONSTRUCTION

11.1 Developments in the field of synthetic adhesive have brought gluing techniques within the range of engineering practice. Timber members of larger cross-sections and long lengths can be fabricated from small sized planks by the process of glulam. The term glued laminated timber construction as applied to structural members refers to various laminations glued together, either in straight or curved form, having grain of all laminations essentially parallel to the length of the member.

11.1.1 *Choice of Glue*

The adhesive used for glued laminated assembly are 'gap filling' type. A 'filler' in powder form is introduced in the adhesive. Structural adhesives are supplied either in powder form to which water is added or in resin form to which a hardener or catalyst is added. For choice of glues, reference may be made to accepted standard [6-3A(11)]. However, it is important that only boiling water proof (BWP) grade adhesives shall be used for fabrication of glulam in tropical, high humid climates like India.

11.1.2 *Manufacturing Schedule*

In absence of a systematic flow-line in a factory, provisions of intermediate technology shall be created for manufacturing structural elements. The schedule involves the following steps:

a) Drying of planks;
b) Planing;
c) End-jointing by scarfs or fingers;
d) Machining of laminations;
e) Setting up dry assembly of structural unit;
f) Application of glue;
g) Assembly and pressing the laminations;
h) Curing the glue lines, as specified; and
j) Finishing, protection and storage.

11.1.3 The information with regard to block shear test results on glued timber joints is given in Table 18.

Table 18 Block Shear Test Results on Glued Timber Joints

(*Clause* 11.1.3)

Sl No.	Timber Species	Ultimate Shear Stress (Inside Location) N/mm²		
		Solid Timber Along the Grain (Un-Jointed)	With Urea Formal-dehyde	With Phenol Formal-dehyde
(1)	(2)	(3)	(4)	(5)
i)	*Abies pindrow* (Fir)	5.984	7.652	9.614
ii)	*Acacia catechu* (Khair)	15.107	7.456	—
iii)	*Acacia milotica* (Babul)	14.126	5.199	3.237
iv)	*Albizia Odoratissima* (Karasiris)	15.009	14.126	5.984
v)	*Azadirachta indica* (Neem)	12.557	7.259	8.240
vi)	*Casteanopsis hystrix* (Chestnut)	8.044	1.668	—
vii)	*Cedrus deodar* (Deodar)	6.867	4.218	3.237
viii)	*Dalbergia sissoo* (Sissoo)	10.595	15.107	9.320
ix)	*Eucalyptus eugenioides* (Eucalyptus)	12.164	10.987	5.101
x)	*Grewia tiliefolia* (Dhawan)	8.927	10.889	6.475
xi)	*Hopea utilis* (Karunkangoo)	14.813	9.320	—
xii)	*Hopea glabra &H. parviflora* (Hopea)	15.009	13.832	0.491
xiii)	*Mangifera Indica* (Mango)	9.418	9.418	3.826
xiv)	*Madhuca longifolia* (Mahua)	9.810	0.883	7.456
xv)	*Mesua ferrea* (Mesua)	12.164	1.079	2.256
xvi)	*Morus alba* (Mulberry)	9.810	13.734	8.142
xvii)	*Pinus wallichiana* (Kail)	5.494	6.377	7.259
xviii)	*Pinus roxburghii* (Chir)	6.082	6.769	7.750
xix)	*Poecilone indicum* (Ballagi)	14.911	5.297	5.984
xx)	*Pterocarpus mersupium* (Bijasal)	9.221	5.003	6.671
xxi)	*Quercus spp.* (Oak)	8.142	10.791	5.396
xxii)	*Ougeinia oojeinensis* (Sanetan)	13.440	5.396	9.516
xxiii)	*Shorea robusta* (Sal) M.P	9.123	5.003	—
xxiv)	*Shorea robusta* (Sal) UP	12.361	5.396	1.472
xxv)	*Sterospermum chelonoides* (Padriwood)	11.674	9.221	8.829
xxvi)	*Syzygium cuzainii* (Jaman)	10.791	9.418	10.301
xxvii)	*Terminalia alata* (Sain)	9.320	13.538	8.142
xxviii)	*Tectona grandis* (Teak)	10.987	5.984	6.377
xxix)	*Terminalia myriocarpa* (Hollock)	8.339	9.221	9.810
xxx)	*Toona ciliata* (Toon)	6.867	4.905	6.180

NOTE — The information given in the above table is based on the block shear test results on glued timber joints conducted on the basis of BS 4169:1970 'Specification for manufacture of glued-laminated timber structural members' (since revised and subsequently superseded by BS EN 392:1995, BS EN 391:1995, BS EN 386:1995), and the failures observed with regard to glue line and the wood. Ultimate shear stresses for 29 species were studied keeping design glue shear strength at least one-third of ultimate. Glue mixing, spreading, pressing and curing was done as per the instructions of adhesive manufacturers under improvised techniques locally developed. Sustainable period before delamination of glue bond (urea formaldehyde) in weathering tests was recorded for over a year. Limited number of species survived with most of them failed within a period of six months

11.2 Design of Glued Laminated Beams

11.2.1 *General*

Glued laminated structural members shall be fabricated only where there are adequate facilities for accurate sizing and surfacing of planks, uniform application of glue, prompt assembly, and application of adequate pressure and prescribed temperature for setting and curing of the glue. Design and fabrication shall be in accordance with established engineering principles and good practice. A glued laminated beam is a straight member made from a number of laminations assembled both ways either horizontally or vertically (*see* Fig. 13). While vertical laminations have limitations in restricting the cross-section of a beam by width of the plank, horizontally laminated section offers wider scope to the designer in creating even the curved members. Simple straight beams and joists are used for many structures from small domestic rafters or ridges to the light industrial structures.

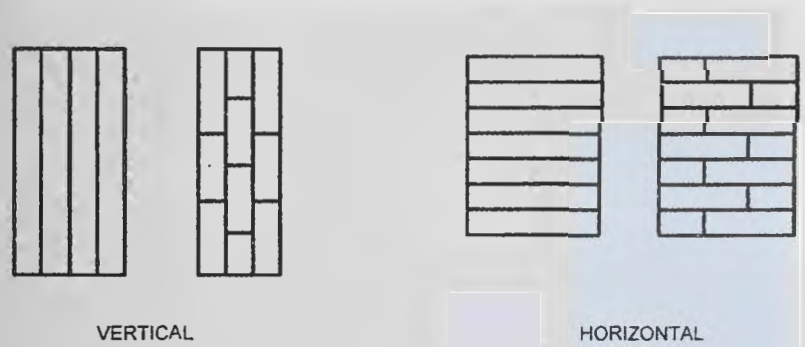

FIG. 13 POSSIBLE ORIENTATION OF PLANKS IN GLULAM

11.2.2 *Design*

The design of glue laminated wood elements shall be in accordance with good engineering practice and shall take into consideration the species and grade of timber used, presence of defects, location of end joints in laminations, depth of beams and moisture contents expected while in service. Beams of large spans shall be designed with a suitable camber to assist in achieving the most cost effective section where deflection governs the design. The strength and stiffness of laminated beams is often governed by the quality of outer laminations. Glued laminated beams can be tapered to follow specific roof slopes across a building and/or to commensurate with the varying bending moments. Glulam allows the engineers to mix grades within a beam. Obviously, the lower tensile portion should be of high grade material. However, it is possible to incorporate a considerable volume of lower grade material near the neutral axis taking care of the horizontal shear stress. Similarly, species can also be mixed depending upon the modulus of elasticity.

Straight beams that will be simply supported should be cambered during fabrication to allow for deflection due to dead loads over a period of time. The usual camber is $\frac{\text{Span}}{400}$, unless otherwise specified.

11.2.2.1 *Design outline for horizontally laminated beams*

A design outline for horizontal laminated beams, specifying data required and a possible solution is given below.

Data required:

a) Span (L), loads including self weight of beam (W), species of timber, thickness of lamination proposed; and

b) Mechanical properties of timber species (permissible extreme fibre stress in bending-tension, permissible compressive stress perpendicular to grain, modulus of elasticity, permissible shear stress parallel to grain).

The permissible shear stress at the glue line is at least the same as the permissible shear stress parallel to grain of the species in design, unless otherwise tested.

Solution:

a) Let, b = width of beam, and d = depth of beam, for lateral stability,

$b : d = 1 : 4$ (*say*).

b) Determine bending moment on the basis of span, loading and support conditions (say, $WL/8$ for beams with both ends fixed).

c) Also, Bending moment (M) = Bending stress (f_b) × Section modulus (Z).

$$\text{Therefore, } M = f_b \times \frac{bd^2}{6} = \frac{WL}{8}$$

$$\text{or } bd^2 = \frac{WL}{8} \times \frac{6}{f_b}$$

d) From bd^2 obtained at (c) and b:d assumed at (a), arrive at appropriate values of b and d.

e) Check for deflection of beam. Since dead load is for long term, double this for deflection check, that is,

$$W = (2 \times \textit{Dead load}) + \textit{Imposed load}$$

Deflection is to be limited to the specified requirement, say 0.003 of span.

Substituting values of b and d from (d) and I ($= bd^3/12$) in the formula for deflection, perform check against the limit for deflection.

f) Decide the number and thickness of laminations for the required depth of section.

11.2.3 *Material*

Laminating boards shall not contain decay, knots or other strength reducing characteristics in excess of those sizes or amounts permitted by specifications. The moisture content shall approach that expected in service and shall in no case exceed 15 percent at the time of gluing. The moisture content of individual laminations in a structural member shall not differ by more than 3 percent at the time of gluing. Glue shall be of type suitable for the intended service of a structural member.

11.2.4 *Fabrication/Manufacture*

In order to assure a well-bonded and well-finished member of true shape and size, all equipment, end-jointing, glue spread, assembly, pressing, curing or any other operation in connection with the manufacture of glued structural members shall be in accordance with the available good practices and as per glue manufacturers' instructions as applicable.

11.2.4.1 End joints shall be scattered in adjacent laminations, which shall not be located in very highly stressed outer laminations.

11.2.5 *Testing*

Quality control, inspection and testing during production is essential to structural glulam. Special attention needs to be given to members exposed to weather.

For examining the quality of glue and its relative strength *vis-à-vis* species of timber in glued laminated construction, it is necessary to conduct block shear and other related tests in accordance with accepted standard [6-3A(11)]. Structural loading tests on prototype sizes provide information on the strength properties, stiffness or rigidity against deflection of a beam. Information on different strength functions as obtained from such indigenous tests carried out on laminated timber beams are given in Table 19, for guidance in design.

12 LAMINATED VENEER LUMBER

12.1 Certain reconstituted lignocellulosic products with fibre oriented along a specific direction have been developed and are being adopted for load bearing applications. Laminated veneer lumber is one such product developed as a result of researches in plantation grown species of wood. Density of laminated veneer lumber ranges from 600 to 750 kg/m^3 which is manufactured in accordance with accepted standard [6-3A(12)].

12.1.1 *Dimensions*

Sizes of laminated veneer lumber composite shall be inclusive of margin for dressing and finishing unless manufactured to order. The margin for dressing and finishing shall not exceed 3 mm in the width and thickness and 12 mm in the length.

12.1.2 *Permissible Defects*

a) Jointing gaps : Not more than 3 mm wide, provided they are well staggered in their spacing and position between the successive plies.

b) Slope of grain : Not exceeding 1 in 10 in the face layers.

c) Tight knot : Three numbers up to 25 mm diameter in 1m^2 provided they are spaced 300 mm or more apart.

d) Warp : Not exceeding 1.5 mm per metre length.

Table 19 Laminated Timber Beams — Structural Bending Test Under Third Point Loading

(*Clause* 11.2.5)

Species — *Pinus wallichiana* (Kail),
Effective span — 2.3 m, Cross section: 100 × 240 mm, and
Adhesive — Urea formaldehyde

Sl No.	Strength Functions	Nail Laminated Vertical Laminates with Four Full Size Planks Using 8 SWG, 100 mm Long Nails	Glue Laminated		Solid (Control) Specimen
			Vertical Laminates Four Planks, Each 25 mm Thick	Horizontal Laminates Eight Planks, Each 30 mm Thick	
(1)	(2)	(3)	(4)	(5)	(6)
i)	Modulus of rupture, N/mm^2	27.439	31.363	21.568	30.509
ii)	Modulus of elasticity (×10^3 N/mm^2)	8.167	8.903	8.210	7.554
iii)	Fibre stress at limit of proportionality, N/mm^2	18.136	14.166	13.259	18.276
iv)	Maximum horizontal shear stress, N/mm^2	1.723	1.967	1.319	1.906

12.1.3 *Strength Requirements*

The strength requirements for laminated veneer lumber shall be as per Table 20.

Table 20 Requirements of Laminated Veneer Lumber

(*Clause* 12.1.3)

Sl No. (1)	Properties (2)	Requirement (3)
i)	Modulus of rupture, N/mm², *Min*	50
ii)	Modulus of elasticity, N/mm², *Min*	7 500
iii)	Compressive strength parallel to grain, N/mm², *Min*	35
iv)	Horizontal shear :	
	a) Parallel to laminae, N/mm², *Min*	6
	b) Perpendicular to laminae, N/mm², *Min*	8
v)	Tensile strength parallel to grain, N/mm², *Min*	55
vi)	Screw holding power :	
	a) Edge (N), *Min*	2 300
	b) Face (N), *Min*	2 700
vii)	Thickness swelling in 2 h water soaking (percent), *Max*	3

13 GLUED FINGER JOINTS

13.1 Finger joints are glued joints connecting timber members end-to-end (*see* Fig. 14). Such joints shall be produced by cutting profiles (tapered projections) in the form of v-shaped grooves to the ends of timber planks or scantling to be joined, gluing the interfaces and then mating the two ends together under pressure. Finger joints provide long lengths of timber, ideal for upgrading timber by permitting removal of defects, minimising warping and reducing wastage by avoiding short off-cuts.

13.1.1 In finger joints the glued surfaces are on the side grain rather than on the end grain and the glue line is stressed in shear rather in tension.

13.1.1.1 The fingers can be cut from edge-to-edge or from face-to-face. The difference is mainly in appearance, although bending strength increases if several fingers share the load. Thus a joist is slightly stronger with edge-to-edge finger joints and a plank is stronger with face-to-face finger joint.

13.1.1.2 For structural finger jointed members for interior dry locations, adhesives based on melamine formaldehyde cross linked polyvinyl acetate (PVA) are suited. For high humid and exterior conditions, phenol formaldehyde and resorcinol formaldehyde type adhesives are recommended. Proper adhesives should be selected in consultation with the designer and adhesive manufacturers and assessed in accordance with accepted standard [6-3A(11)].

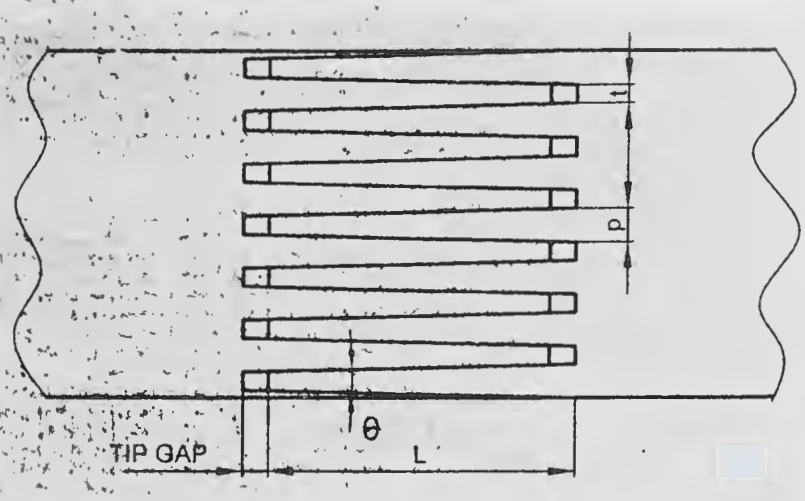

L = FINGER LENGTH
p = PITCH
t = TIP THICKNESS
θ = 6°

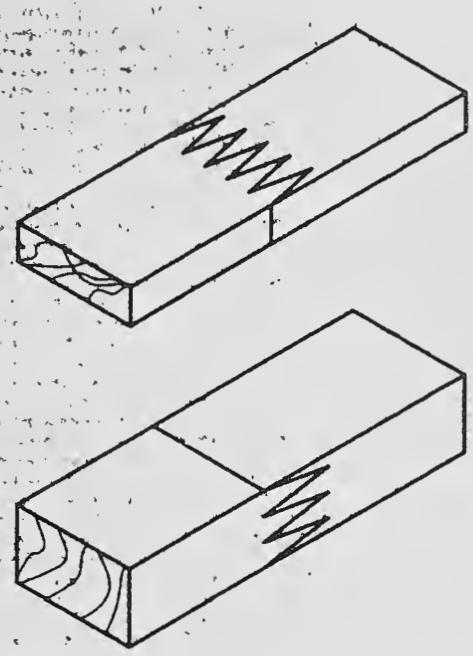

Orientation of Finger Joints

FIG. 14 TYPICAL FINGER JOINT GEOMETRY

13.1.2 *Manufacturing Process*

In the absence of sophisticated machinery, the finger joints shall be manufactured through intermediate technology with the following steps:

a) Drying of wood
b) Removal of knots and other defects
c) Squaring the ends of the laminating planks
d) Cutting the profile of finger joint in the end grain
e) Applying adhesives on the finger interfaces
f) Pressing the joint together at specified pressure
g) Curing of adhesive line at specified temperature
h) Planing of finger-jointed planks for smooth surface

13.1.3 *Strength*

Strength of finger joints depends upon the geometry of

the profile for structural purpose; this is generally 50 mm long, 12 mm pitch.

13.1.3.1 The strength properties of glued finger joints are given in Table 21 for information and guidance in design.

13.1.3.2 Tip thickness shall be as small as practically possible.

14 STRUCTURAL USE OF PLYWOOD

Unlike sawn timber, plywood is a layered panel product comprising veneers of wood bonded together with adjacent layers usually at right angles. As wood is strongest when stressed parallel to grain, and weak perpendicular to grain, the lay up or arrangement of veneers in the panel determines its properties. When the face grain of the plywood is parallel to the direction of stress, veneers parallel to the face grain carry almost all the load. Some information/guidelines for structural use of plywood which should be manufactured in accordance with accepted standards [6-3A(13)] are given in **14.1** to **14.3**.

14.1 The plywood has a high strength to weight ratio, and is dimensionally stable material available in sheets of a number of thicknesses and construction. Plywood can be sawn, drilled and nailed with ordinary wood working tools. The glues used to bond these veneers together are derived from synthetic resins which are set and cured by heating. The properties of adhesives can determine the durability of plywood.

14.2 In glued plywood construction, structural plywood is glued to timber resulting in highly efficient and light structural components like web beams (I and box sections) (*see* Fig. 15 and Fig. 16) stressed skin panels (*see* Fig. 17) used for flooring and walling and pre-fabricated houses, cabins, etc. Gluing can be carried out by nail gluing techniques with special clamps. High shear strength of plywood in combination with high flexural strength and stiffness of wood result in structures characterized by high stiffness for even medium spans. Plywood can act as web transmitting shear stress in web bearing or stressed skin or sandwich construction. The effective moment of inertia of web beam and stressed skin construction depends on modular ratio that is, E of wood to E of plywood.

14.3 Structural plywood is also very efficient as cladding material in wood frame construction such as houses. This type of sheathing is capable of resisting racking due to wind and earthquake forces. Structural plywood has been widely used as diaphragm (horizontal) as in roofing and flooring in timber frame construction. It has been established that 6 mm thick plywood can be used for sheathing and even for web and stressed skin construction, 9 mm to 12 mm thick plywood is suitable for beams, flooring diaphragms, etc. Phenol formaldehyde (PF) and PRF adhesive are suitable for fabrication of glued plywood components. 6 mm to 12 mm thick structural plywood can be very well used as nailed or bolted gussets in fixing members of trusses or lattice girders or trussed rafters.

Normally, scarf joints are used for fixing plywood to required length and timber can be joined by using either finger or scarf joints. Arch panels, folded plates, shelves are other possibilities with this technique.

15 TRUSSED RAFTER

15.1 General

A roof truss is essentially a plane structure which is very stiff in the plane of the members, that is the plane in which it is expected to carry loads, but very flexible in every other direction. Thus it can virtually be seen as a deep, narrow girder liable to buckling and twisting under loads. In order, therefore, to reduce this effect, eccentricity of loading and promote prefabrication for economy, low-pitched trussed rafters are designed with bolt ply/nail ply joints. Plywood as gussets, besides being simple have inherent constructional advantage of grain over solid wood for joints, and a better balance is achievable between the joint strength and the member strength.

Trussed rafters are light weight truss units spaced at close centres for limited spans to carry different types of roof loads. They are made from timber members of uniform thickness fastened together in one plane. The plywood gussets may be nailed or glued to the timber to form the joints. Conceptually a trussed rafter is a triangular pin jointed system, traditionally meant to carry the combined roof weight, cladding services and wind loads. There is considerable scope for saving timber by minimizing the sections through proper design without affecting structural and functional requirements.

Trussed rafters are required to be supported only at their ends so that there is no need to provide load bearing internal walls, purlins, etc. In comparison with traditional methods of construction they use less timber and considerably reduce on-site labour, and mass production of reliable units can be carried out under workshop controls.

15.2 Design

15.2.1 The design may be based on the use of Group 'C' species of standard grade timber in accordance with good practice [6-3A(7)] for nail jointed timber construction. As the strength and stiffness of any framing depends upon efficiency of joints, design calls for proper size and number of fasteners, their spacings

Table 21 Strength Characteristics of Glued Finger Joints

(*Clause* 13.1.3.1)

Timber species — *Pinus wallichiana* (Kail)

(Averaged test results)

Sl No.	Character → / Treatment ↓	Compressive Parallel to Grain Tests			Tension Parallel to Grain Tests			Static Bending Tests											
								Central Point Loading						Two Point Loading					
								Edge-wise			Flat-wise			Edge-wise			Flat-wise		
		Maximum Compressive Stress (N/mm²)	Fibre Stress at EL (N/mm²)	MOE (×10³ N/mm²)	Maximum Tensile Stress (N/mm²)	Tensile Stress at EL (N/mm²)	MOE (×10³ N/mm²)	Fibre Stress at EL (N/mm²)	MOR (N/mm²)	MOE (×10³ N/mm²)	Fibre Stress at EL (N/mm²)	MOR (N/mm²)	MOE (×10³ N/mm²)	Fibre Stress at EL (N/mm²)	MOR (N/mm²)	MOE (×10³ N/mm²)	Fibre Stress at EL (N/mm²)	MOR (N/mm²)	MOE (×10³ N/mm²)
(1)	(2)	(3)	(4)	(5)	(6)	(7)	(8)	(9)	(10)	(11)	(12)	(13)	(14)	(15)	(16)	(17)	(18)	(19)	(20)
i)	UL_1	31.196	16.971	10.202	30.019	23.446	10.202	20.993	29.136	6.769	39.142	46.401	8.142	25.114	28.743	8.044	32.471	38.553	9.516
ii)	UL_2	37.474	17.462	11.282	30.607	23.642	10.301	20.209	31.686	6.671	35.120	46.205	7.161	23.446	42.085	7.652	41.202	51.306	9.712
iii)	UL_3	35.905	19.914	10.595	32.667	23.838	10.006	22.171	35.022	6.867	38.750	47.480	8.437	25.898	29.234	7.848	29.626	38.357	8.633
iv)	PL_1	28.743	21.484	9.908	20.895	17.560	10.497	20.699	23.446	8.142	22.955	27.076	9.123	18.443	21.876	7.848	25.506	27.174	8.927
v)	PL_2	28.743	19.424	10.006	18.149	17.069	9.614	16.285	18.639	5.984	24.133	26.095	8.731	16.579	17.854	7.259	26.389	28.547	8.535
vi)	PL_3	27.860	20.111	9.908	24.721	19.326	10.497	15.009	17.069	7.652	21.680	26.193	8.829	10.301	11.183	6.867	26.487	30.313	11.183
vii)	C	35.512	27.959	10.301	31.490	23.152	10.104	25.506	45.518	7.063	36.788	57.192	7.063	31.883	44.537	7.946	38.161	52.582	9.221

MOE — Modulus of elasticity (values rounded off for decimals)

MOR — Modulus of rupture

EL — Elastic limit

U — Urea formaldehyde with liquid hardener

P — Cold setting phenolic glue with hardener

L_1 — Finger length 38 mm

L_2 — Finger length 50 mm

L_3 — Finger length 62 mm

C — Control (unjointed specimen)

NOTE — The information given in the above table is based on the tests conducted on glued finger joints of varying lengths/pitch with two types of adhesives.

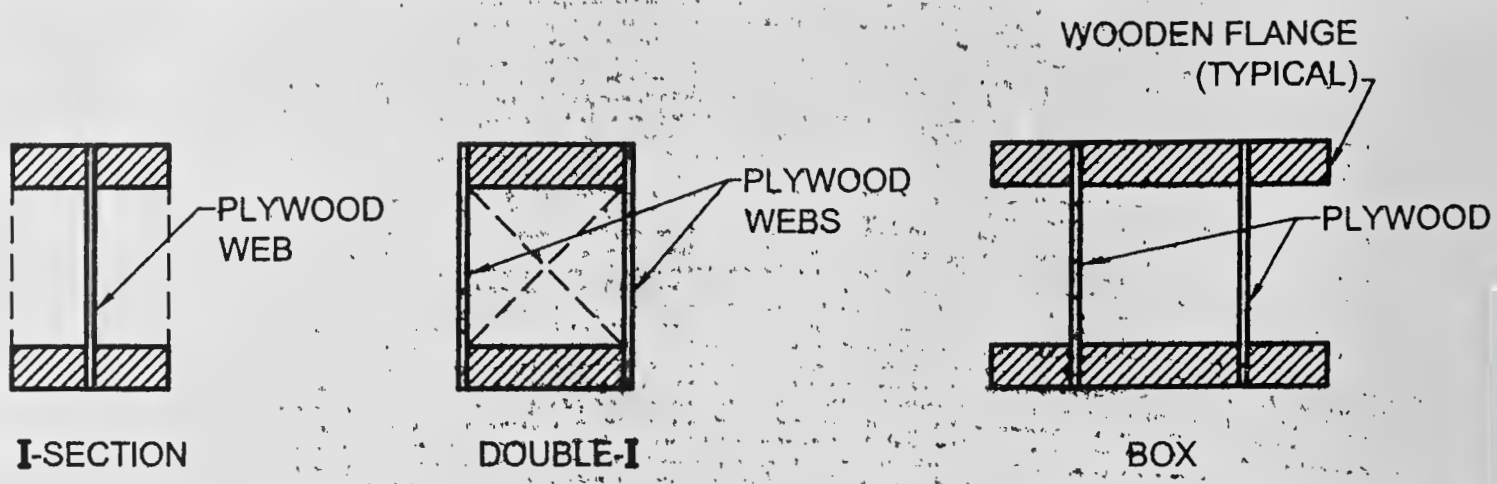

FIG. 15 TYPICAL CROSS-SECTION OF WEB BEAMS

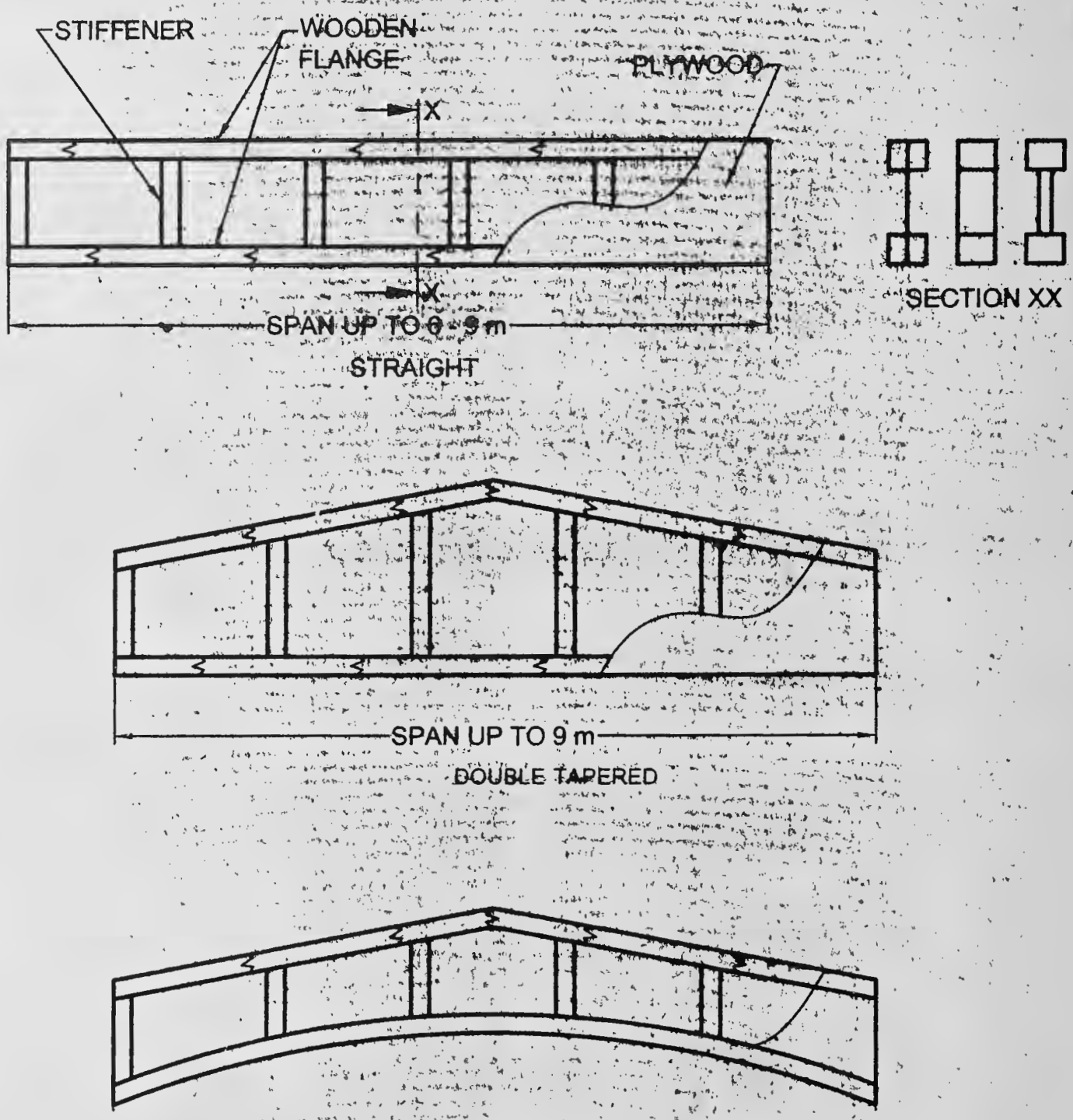

FIG. 16 WEB BEAM CONFIGURATIONS

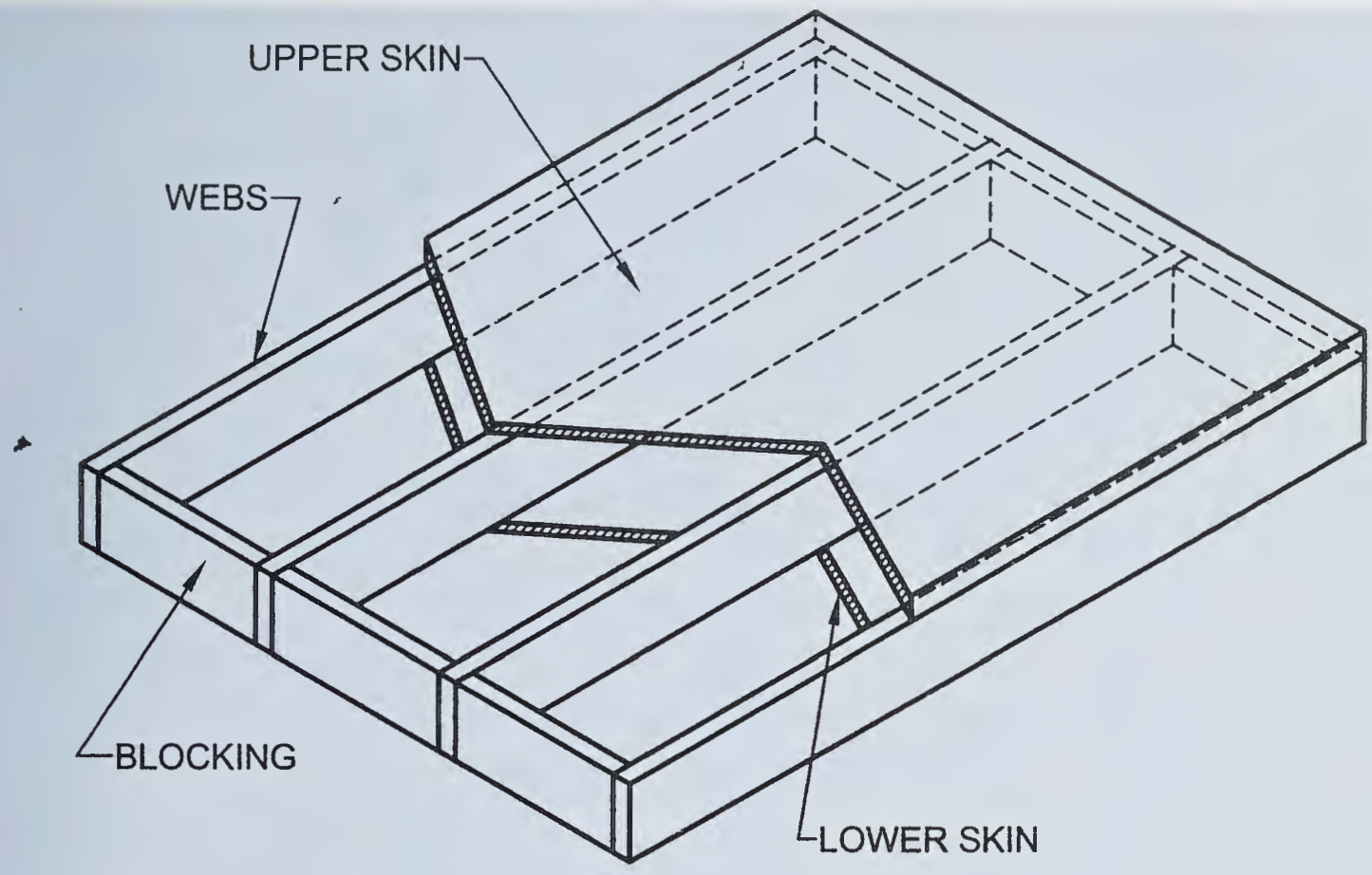

FIG. 17 STRESSED SKIN PANEL CONSTRUCTION (SINGLE SKIN OR DOUBLE SKIN)

and thickness of gusset plates for transfer of stress from one member to the other.

Trussed rafter shall be designed to sustain the dead and imposed loads specified in Part 6 'Structural Design, Section 1 Loads, Forces and Effects' of the Code and the combinations expected to occur. Extra stresses/ deflections during handling, transportation and erection shall be taken care of. Structural analysis, use of load-slip and moment, rotation characteristics of the individual joints may be used if feasible. Alternatively, the maximum direct force in a member may be assessed to be given by an idealized pin-jointed frame-work, fully loaded with maximum dead and imposed load in the combination in which they may reasonably be expected to occur.

NOTE — Some trussed rafters with plywood gusseted joint, span 6 m, designed in *Pinus roxburghii* (Chir) were tested in prototypes at Forest Research Institute, Dehra Dun for structural adequacy as under, in accordance with accepted standards [6-3A(14)],

a) destructive test (short-term); and

b) proof test (long-term).

Results demonstrated an apparent factor at safety of 4 and actual factor of safety of 3. Deflection was well within the allowable deflection at design load. A pre-camber of 1/240 of span at the bottom chord was recommended.

15.3 Timber

The species of timber including plantation grown species which can be used for trussed rafter construction and permissible stresses thereof shall be in accordance with Table 1. Moisture contents shall be as per zonal requirements in accordance with **4.4**.

15.4 Plywood

Boiling water proof (BWP) grade preservative treated plywood shall be used in accordance with accepted standards [6-3A(13)]. Introduction of a plywood gusset simplifies the jointing and in addition provides rigidity to the joint. Preservation of plywood and other panel products shall be done in accordance with good practice [6-3A(15)].

15.5 Some design data on the lateral load bearing strength of common wire nails in plywood-to-wood joints are presented for timber species, Sal and Chir in Table 22, for guidance in design.

16 STRUCTURAL SANDWICHES

16.1 General

Sandwich constructions are composites of different materials including wood based materials formed by bonding two thin facings of high strength material to a light weight core which provides a combination of desirable properties that are not attainable with the individual constituent materials (*see* Fig. 18). The thin facings are usually of strong dense material since that are the principal load carrying members of the construction. The core should be stiff enough to ensure the faces remain at the correct distance apart. The sandwiches used as structural elements in building construction shall be adequately designed for their intended services and shall be fabricated only where there are adequate facilities for gluing or otherwise bonding cores to facings to ensure a strong and durable

product. The entire assembly provides a structural element of high strength and stiffness in proportion to its mass.

Non-structural advantages can also be derived by proper selection of facing and core material, for example, an impermeable facings can be used to serve as a moisture barrier for walls and roof panels and core may also be selected to provide thermal and/or acoustic insulation, fire resistance, etc, besides the dimensional stability.

16.2 Cores

Sandwich cores shall be of such characteristics as to give to the required lateral support to the stressed facings to sustain or transmit the assumed loads or stresses. Core generally carries shearing loads and to support the thin facings due to compressive loads. Core shall maintain the strength and durability under the conditions of service for which their use is recommended. A material with low *E* and small shear modulus may be suitable.

16.3 Facings

Facings shall have sufficient strength and rigidity to resist stresses that may come upon them when fabricated into a sandwich construction. They shall be thick enough to carry compressive and tensile stresses and to resist puncture or denting that may be expected in normal usages.

16.4 Designing

Structural designing may be comparable to the design of I-beams, the facings of the sandwich represent the flanges of the I-beam and the sandwich core I-beam web.

16.5 Tests

Panels of sandwich construction shall be subject to testing in accordance with accepted standards [6-3A(17)]. Tests shall include, as applicable, one or more of the following:

a) Flexural strength/stiffness,
b) Edge-wise compressions,
c) Flat-wise compression,
d) Shear in flat-wise plane,
e) Flat-wise tensions,
f) Flexural creep (creep behaviour of adhesive),

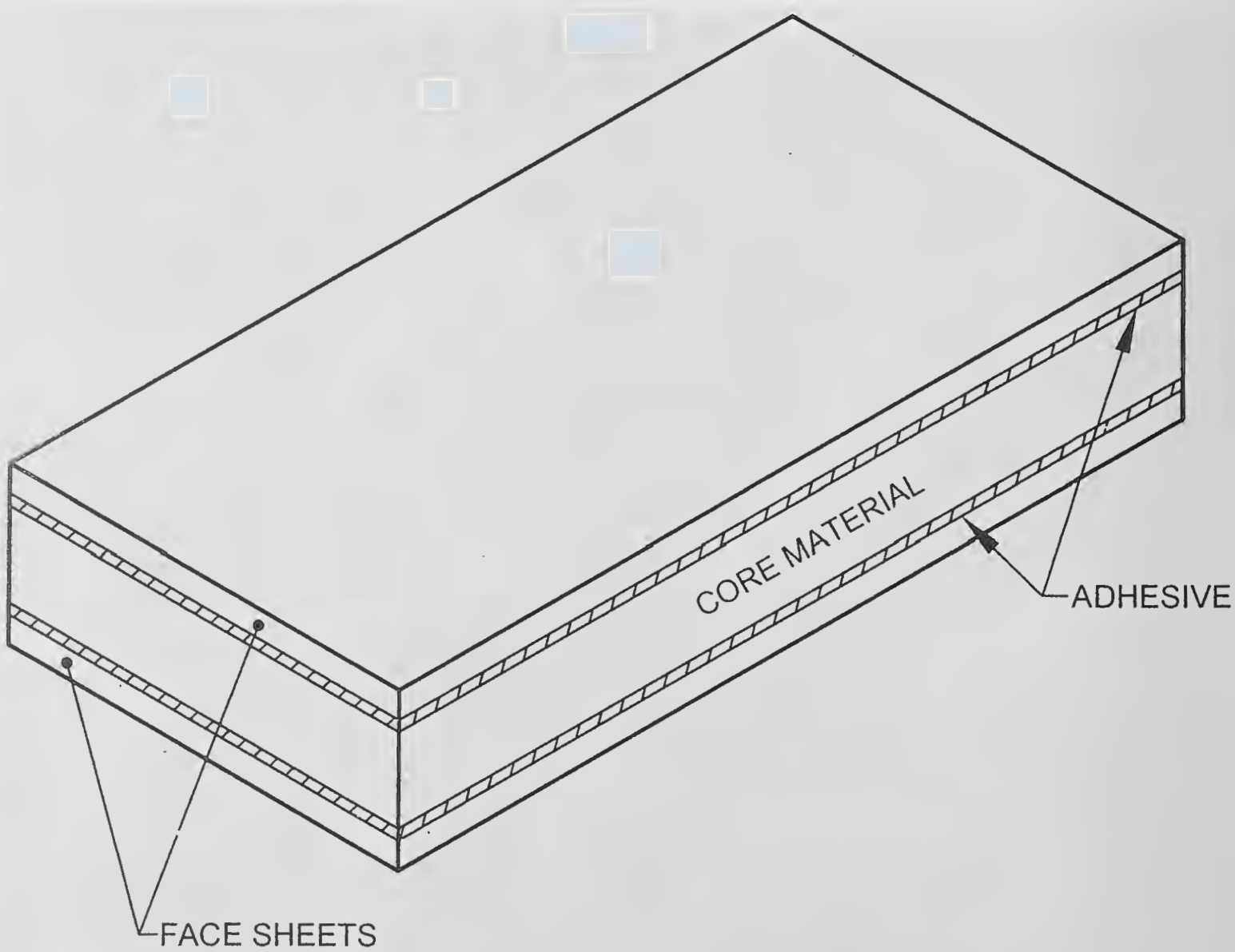

FIG. 18 SANDWICH CONSTRUCTION IN STRUCTURAL APPLICATIONS

Table 22 Lateral Load Bearing Strength of Wire Nails in Plywood-to-Wood Composite Joints Permissible Lateral Strength of 9 SWG (3.55 mm dia) Nail in Double Shear (kg) Safe Load per Nail

(*Clause* 15.5)

Thickness of Members mm		Facing Veneer of Plywood Along the Loading Direction (Loading Direction in the Main Member of the Joint)								Across Loading Direction (Loading Direction in the Main Member of the Joint) Loaded Parallel to Grain	
Main Member Timber	Side Members Plywood	Parallel to Grain		Perpendicular to Grain		At 60° Inclination to Grain		At 30° Inclination to Grain			
		Permanent Structures	Temporary Structures	Permanent Structures	Temporary Structures	Permanent Structures	Temporary Structures	Permanent Structures	Temporary Structures	Permanent Structures	Temporary Structures
(1)	(2)	(3)	(4)	(5)	(6)	(7)	(8)	(9)	(10)	(11)	(12)
					Species: *Shorea robusta* (Sal)						
30		109	121	135	156	151	168	140	164		
40	9	123	124	121	166	142	181	145	158	142	151
50		89	123	157	167	162	170	99	139		
30		157	177	150	154	164	179	111	171		
40	12	179	191	145	193	154	194	132	192	135	180
50		151	183	149	191	155	202	128	182		
30		245	283	Larger thickness of plywood is generally not recommended to be used							
40	19	259	264	in structures unless heavily stressed						150	209
50		231	316								
					Species: *Pinus roxburghii* (Chir)						
30		102	127	112	141	60	125	92	124		
40	9	103	148	100	153	98	142	101	141	107	148
50		87	133	119	150	50	168	50	114		
30		133	163	116	111	80	132	127	150		
40	12	114	173	112	136	64	157	137	174	118	174
50		99	194	117	138	90	170	119	161		
30		219	309	Larger thickness of plywood generally not used in structures unless							
40	19	238	306	heavily stressed.						158	249
50		236	333								

NOTES

1 Plywood shall be of shuttering grade as per the accepted standard [6-3A(16)].

2 Subject to satisfying all the design requirements in structures,

a) For denser species. timber thickness of 30 mm may be used by means of a plywood of 9 mm thickness for all practical purposes. For species like Chir, plywood thickness of 12 mm may be used with 30 mm or 40 mm timber thickness.

b) Regarding aligning the veneers of plywood plate; nail strength data may be used as design function irrespective of alignment of face veneer to overcome practical difficulties.

c) While prebore is essential to drive nail in structural timber as per the good practice [6-3A(7)], plywood plates need not be prebored for nailing.

g) Cantilever vibrations (dynamic property), and

h) Weathering for dimensional stability.

17 LAMELLA ROOFING

17.1 General

The lamella roofing offers an excellent architectural edifice in timber, amenable to prefabrication, light weight structure with high central clearance. It is essentially an arched structure formed by a system of intersecting skewed arches built-up of relatively short timber planks of uniform length and cross-section. Roof is designed as a two hinged arch with a depth equal to the depth of an individual lamella and width equal to the span of the building. The curved lamellas (planks) are bevelled and bored at the ends and bolted together at an angle, forming a network (grid) pattern of mutually braced and stiffened members (*see* Fig. 19 and Fig. 20).

The design shall be based on the balanced or unbalanced assumed load distribution used for roof arches. Effect of deformation or slip of joints under load on the induced stresses shall be considered in design. Thrust components in both transverse and longitudinal directions of the building due to skewness of the lamella arch shall be adequately resisted. Thrust at lamella joints shall be resisted by the moment of inertia in the continuous lamella and roof sheathing (decking) of lamella roofing. The interaction of arches in two directions adds to the strength and stability against horizontal forces. For design calculations several assumption tested and observed derivations, long-duration loading factors. seasoning advantages and effects of defects are taken into account.

17.2 Lamellas

Planking shall be of a grade of timber that is adequate in strength and stiffness to sustain the assumed loads, forces, thrust and bending moments generated in lamella roofing. Lamella planks shall be seasoned to a moisture content approximating that they will attain in service. Lamella joints shall be proportioned so that allowable stresses at bearings of the non-continuous lamellas on the continuous lamellas or bearings under the head or washer of bolts are not exceeded.

17.2.1 *Design Sequence and Methods*

A lamella roof is essentially an arch (segmental, parabolic or elliptical) formed by a system of intersecting skewed arches, built up of relatively short members of small dimensional planks called 'lamellas'. The arch is designed as a two hinged arch with a depth equal to the depth of the individual lamella and a width equal to the span of the building of certain length. For design purposes, a unit length of the given span forming a single arch is considered loaded with the given loads. For the particular arch, curvature offers resultant outward suction on the roof to be less than its self weight to facilitate design and construction for economy. (This is possible only when the semi-angle of arch is less than 42°).

Some design assumptions are:

a) Self weight of timber components (in particular species), namely lamella planks, roof boarding, wall plates, etc is assumed for the particular timber section.

b) Imposed loads as per Part 6 'Structural Design, Section 1 Loads, Forces and Effects' of the Code for curved roofs where slope at springing point is greater than 10°. Take the reduced worked out values of imposed loads for actual design for timber components as per this Subsection.

c) Wind load is taken as per Part 6 'Structural Design, Section 1 Loads, Forces and Effects' of the Code for structures with large openings, that is, openings larger than 20 percent of wall area (or as the case may be).

d) Stresses developed in curved lamella planks should not exceed the allowable safe stresses of timber species used.

e) Range of various sizes of timber planks for lamellas shall be as under:

   1) *Length* — 1.0 m to 2.5 m

   2) *Section*:

      i) *Thickness* — 25 mm to 50 mm

      ii) *Width of uncurved plank* — 100 mm to 250 mm

f) Limitations to be observed for spacing of lamellas over wall plate (or bressummer):

   1) i) For skew angle of 21° (diamond angle 42°).

      ii) For 2.5 m length of plank, spacing shall be 870 mm.

      iii) For 1.0 m length, spacing shall be 360 mm.

   2) i) For skew angle of 19° (diamond angle 38°).

      ii) For 2.5m length of plank, spacing shall be 800 mm.

      iii) For 1.0 m length of plank, spacing shall be 320 mm.

g) Value of horizontal thrust, resultant thrust and maximum bending moment, are taken on per metre length of structure in case of transverse direction of arch.

h) Bending moment may be suitably reduced, if so desired by the designer, by applying stability factor if the ratio of the length of structure to the curved length of arch so warrants (as this ratio increases, the stability of the structure decreases).

j) The thrust in the skewed direction of arch, within one spacing of lamellas is shared by two lamella-lines in skewed direction.

k) More than one bolt (MS) shall be used for nodal joint. For design check of bolt against tension, half the value of thrust in skewed direction will be considered for calculations purposes in light of (j) [in case of stiff roof covering material (that is, CGI sheet, close boarding, etc) all lamella planks will be held jointly-behaving as a monolithic unit to a large extent and the actual stresses developed in bolt will be reduced resulting in lesser actual tension in bolts than the calculated design value].

17.2.1.1 *Horizontal thrust*

Any of the known methods for solving a statically indeterminate structure is used to evaluate horizontal thrust, bending moment, etc, to which a segmental arch will be subjected under the given condition of loadings. For 60° segmental arch, the radius of an arch will be equal to the span of the arch. Horizontal thrust can be calculated by the following two methods:

a) *Method 1*

Horizontal thrust (H_B) per length of one bay (that is, distance between 'tie-rod spacing' or 'column centres'):

$$H_B = (DL + IL) \times \left[\frac{l^2 + s_t^2}{8r} \right]$$

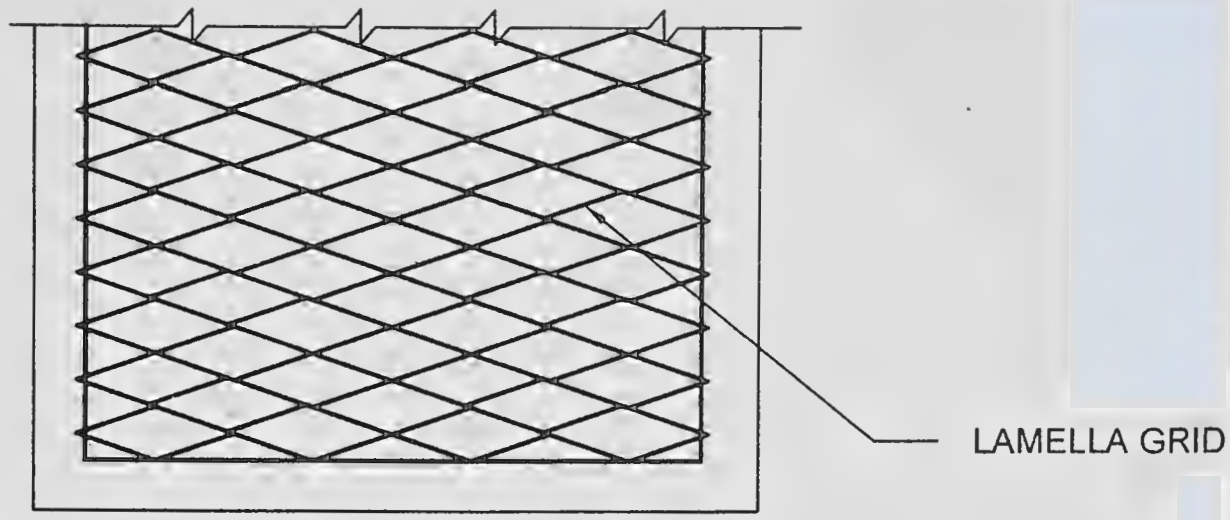

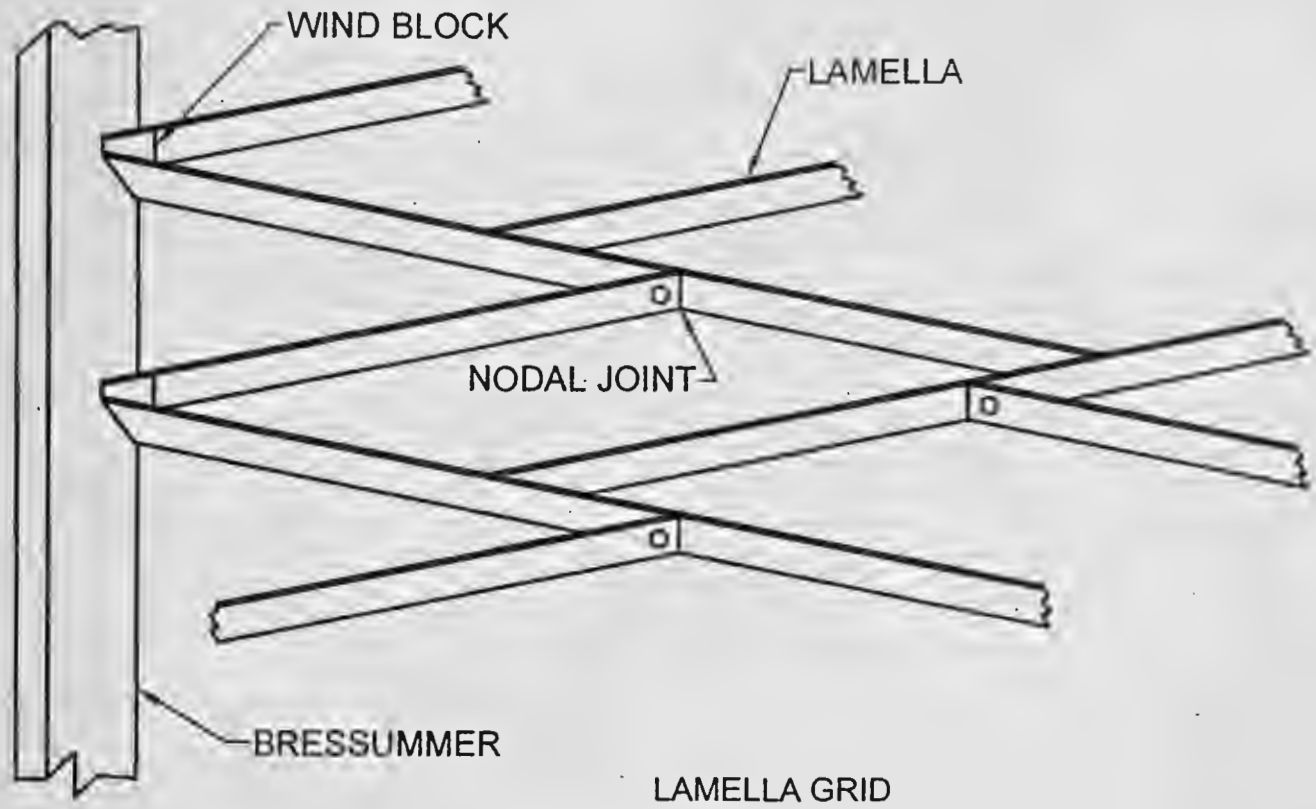

LAMELLA GRID

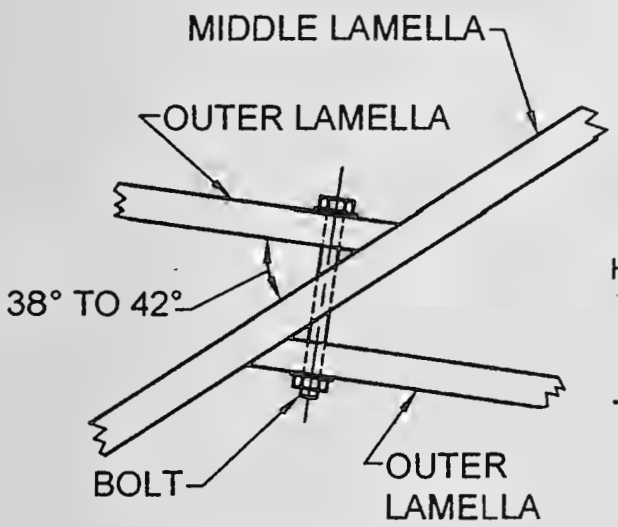

LAMELLA NODAL JOINT

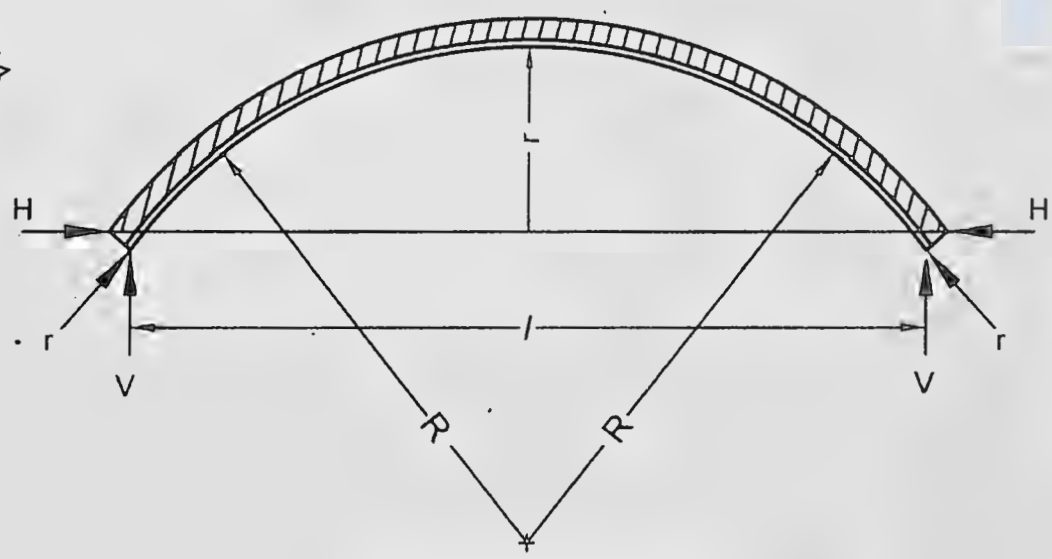

LOAD REACTION DIAGRAM

FIG. 19 TYPICAL ARRANGEMENT OF LAMELLA ROOFING

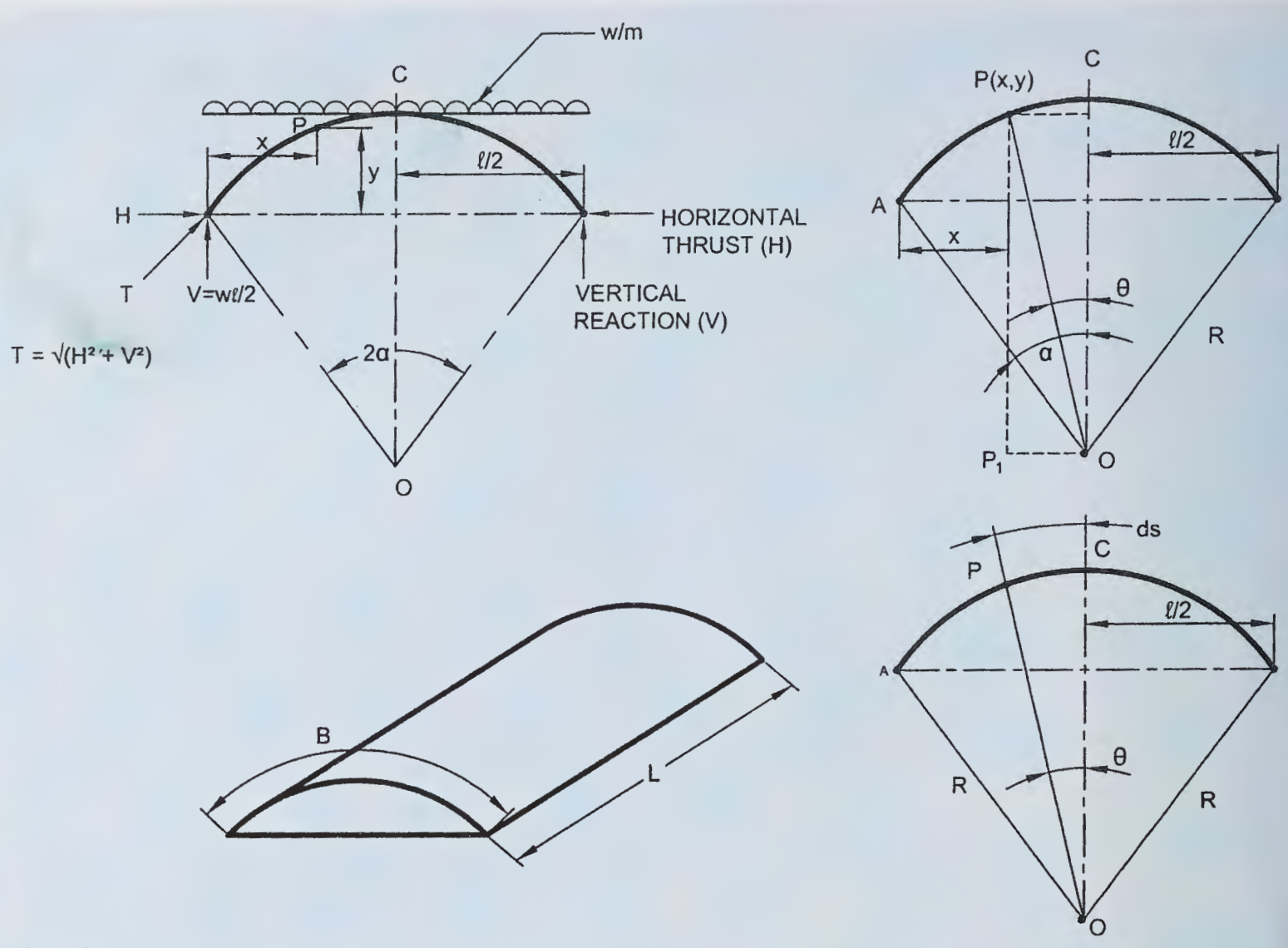

NOTES

1 When the ratio of the length of the structure (*L*) to the circumference of the arch (*B*) increases, stability of the structure decreases. The roof should be designed as,

a) short roof (say, $L/B = 1$), or

b) long roof (say, $L/B = 1.5$).

Shorter roofs have an advantage over long roofs for economical design. However, there is no such advantage beyond *L/B* of 4.

2 Due to stiff roof covering material, stiffness is induced in an arch, which results in safer design.

FIG. 20 STABILITY OF LAMELLA ARCH ROOF

where

H_B = horizontal thrust, in N;

DL = dead load, in N;

IL = imposed load, in N;

l = span of arch, in m;

s_t = tie-rod spacing, in m; and

r = rise of roof arch, in m.

b) *Method 2*

Horizontal thrust (H_1) per metre length of structure (in N):

$$H_1 = C \times w \times R$$

where

C = coefficient varying with the angle of arch and radius of arch;

w = equivalent distributed load per metre of span, in N/m; and

R = radius of circular arch, in m.

Horizontal thrust (H_1) is evaluated as:

$$H_1 = \frac{\int \mu y ds}{\int y^2 ds}$$

where

H_1 = horizontal thrust (per metre length of structure), in N.

μ = bending moment at any point '*P*' distance 'x' metre from one end of springing point of arch and for vertical loads only (consider arch as a beam simply supported carrying the same load).

y = height of point '*P*' above springing line of arch.

θ = angle which the point '*P*' makes at the centre of arch with the vertical.

ds = $Rd\theta$

Now solution for numerator,

$$\mu = \frac{wl}{2}x - wx\frac{x}{2}$$

$$= \frac{wx}{2}(l - x)$$

where

$$x = \frac{l}{2} - R\sin\theta$$

$$= \frac{R}{2} - R\sin\theta$$

$$= R\left(\frac{1}{2} - \sin\theta\right)$$

and $y = R\cos\theta - R\cos\alpha$

$y = R(\cos\theta - \cos\alpha)$

and $ds = Rd\theta$

Substitute the values in expression

$$\int \mu y ds = \int \frac{wx(l-x)}{2} R(\cos\theta - \cos\alpha) R d\theta$$

Solve for limits of θ from $-\alpha$ to $+\alpha$

$$= \int_0^{\alpha} wR^4 (\frac{1}{4} - \sin^2\theta)(\cos\theta - \cos\alpha) d\theta$$

Again for denominator,

$$\int y^2 ds = \int_{-\alpha}^{+\alpha} R^2(\cos\theta - \cos\alpha)^2 R d\theta$$

$$= 2R^3 \int_0^{\alpha} (\cos\theta - \cos\alpha)^2 d\theta$$

Therefore, $H_1 = \dfrac{\int \mu y ds}{\int y^2 ds}$

$$= \frac{wR^4 \int_0^{\alpha} \left(\frac{1}{4} - \sin^2\theta\right)(\cos\theta - \cos\alpha) d\theta}{2R^3 \int_0^{\alpha} (\cos\theta - \cos\alpha)^2 d\theta}$$

On simplification of the above equation for a particular arch, $\alpha = 30°$, $R = l$ (α in radian = 0.5 approx),

$\sin\alpha = 1/2$

$\cos\alpha = \sqrt{3}/2$

$H_1 = 0.923\ wR$

Vertical reaction, $V_1 = \dfrac{\text{Total load} \times \text{Span}}{2}$ at each end of arch due to dead and live loads per metre length (curved strip) of arch roofing.

17.2.1.2 *Resultant thrust, T_1*

Due to horizontal thrust and the vertical reaction, resultant transverse thrust, in kg per metre length on the arch can be worked out:

$$T_1 = \sqrt{H_1^2 + V_1^2}$$

17.2.1.3 *Maximum bending moment*

Bending moment at any point 'P' on arch making an angle of θ with the vertical line OC is, $BM = \mu - (H \times y)$

$$= \frac{wR^2}{2}\left(\frac{1}{4} - \sin^2\theta\right) - 0.923wR^2\left(\cos\theta - \frac{\sqrt{3}}{2}\right)$$

Differentiating the above expression for BM, we get

$$\frac{dM}{d\theta} = (-\sin\theta\cos\theta + 0.923\sin\theta)wR^2$$

It is well known that $\dfrac{dM}{d\theta}$ = shear force

This shear is zero when BM is maximum, that is,

either θ = zero

or $\cos\theta = 0.923$

Therefore, $\theta = \cos^{-1}0.923 = 22.6°$

Substituting these values in the above equation of bending moment, we get maximum BM, that is, the maximum BM occurs at,

a) crown of arch, and

b) at 22.6° from the central line OC.

Thus when $\theta = 0$,

$$BM = \frac{wR^2}{2} \times \frac{1}{4} - 0.923wR^2\left(1 - \frac{\sqrt{3}}{2}\right)$$

$$= wR^2\ (0.125 - 0.123\ 68)$$

$$= 0.001\ 32\ wR^2$$

When $\theta = 22.6°$, $\sin\theta = 0.384$

$$BM = \frac{wR^2}{2}\left(\frac{1}{4} - 0.384\right)^2 - 0.923wR^2\ (0.923 - 0.866)$$

$$= wR^2\ (0.125 - 0.073\ 728) - 0.923 \times 0.057\ wR^2$$

$$= -0.001\ 339wR^2 \text{ or say } -0.001\ 34wR^2$$

The arch has to be designed for the greater of the two values (subject to the longitudinal stiffness coefficient on the basis of ratio L/B of length of the structure to the circumference of the arch) for economical design.

NOTE — Value of horizontal thrust, H_1, resultant thrust, T_1 and bending moment, M_1 will be for 1 m length of building.

17.2.1.4 *Spacing of lamellas*

Lengthwise spacing of lamellas depends upon the angle of skew lamellas and the length of the planks used for lamellas (As a general guidance it may be stated that the angle enclosed between the intersecting skewed arches should not exceed 45°. An angle between 38° and 40° is always preferred.)

17.2.1.5 *Design of lamella sizes*

Net section of each of lamellas is assumed in curved profile conforming to the curvature of the roof surface.

Maximum BM = M_s over 600 mm spacing of lamella in the direction of skew angle, for example

$$= \frac{0.6M_1 \times 10}{\cos 19°} \text{ Nm}$$

where

M_1 = maximum bending moment per metre length of structure in transverse direction.

And maximum thrust N (in Newton) on this strip of 600 mm in skewed direction is:

$$N = \frac{0.6T_1}{\cos 19°} \times \frac{1}{2}$$

(as the force T_1 is shared by two lines of lamellas)

where

N = maximum thrust on 600 mm strip in skewed direction.

T_1 = resultant thrust in transverse direction (in N) per metre length of structure.

Now total compressive and flexural stresses should not exceed the allowable safe stress of timber species used for lamella plank. For fulfilling this condition the following equation should be checked:

$$\frac{N/A}{f_{c\parallel}} + \frac{M_s/Z}{f_t} \leq 1$$

where

N = maximum thrust in skewed direction on strip of 600 mm (in N) corresponding to the maximum bending moment;

Z = section modulus of lamella plank, in mm^3;

A = cross-sectional area of lamella plank, in mm^2;

$f_{c\parallel}$ = safe compression strength of timber fibre parallel to grain, in N/mm^2;

f_t = safe tensile strength of timber parallel to grain, in N/mm^2; and

M_s = bending moment over 600 mm strip of arch in skewed direction, in Nmm;

NOTE — In case the lamella plank is under stressed, the minimum section for practical reasons shall be 25 mm × 100 mm subject to satisfying minimum edge and intermediate distances for accommodating bolts at nodal joints.

17.2.1.6 *Design of bolts for nodal joint*

To avoid any possibility of hinge action with the use of bolts, it is imperative to adopt two or more bolts of smaller diameter and adequately spaced in accordance with the good practice [6-3A(9)].

Assume diameter of bolt 'd' in mm, and length of bolt in one plank 't' mm, that is, thickness of middle lamella plank.

Area of contact of bolt with timber plank = $d \times t$ mm^2

a) *Check against crushing of timber at contact point of bolt* — For the bolt to transmit load without crushing the timber fibres, the following condition shall be satisfied:

$t \times d \times$ compressive stress perpendicular to grain for the timber species > P

where

P = total load to be transmitted through bolt, in N.

b) *Check against tension in bolt* — Arrangement of bolts at the junction of lamellas result in pure tension in bolt as bolt line is at right angle to the outer two lamellas.

Therefore, $Z_t = N \times \cot 2\phi$

where

Z_t = tension in bolt, in N.

N = normal thrust corresponding to maximum moment M_s, in N

$$= \frac{T_1}{\cos\phi} \times \frac{1}{2}$$

T_1 = resultant thrust in transverse direction (in N) per metre length of structure.

Therefore,

Area of bolt (A_t) × tensile stress of steel (F_t) ≥ Z_t

Area of bolt required for safe design = Z_t/F_t

Select the diameter to engage at least two bolts.

(Required area of bolt is the effective area after considering reduction of area at the threaded end, which is generally 17 percent of the actual bolt diameter)

17.2.1.7 *Design of steel washer at joints*

Area of steel plate = A_t mm^2

Stress perpendicular to grain of wood at the point of contact with steel plate washer = Z_t/A_t N/mm^2

If $Z_t/A_t \leq$ compressive stress perpendicular to grain of the species of timber used, the assumed section is safe.

17.3 Construction

Design and construction of lamella roofs in India assumes the roof surfaces to be cylindrical with every individual lamella an elliptic segment of an elliptical arch of constant curved length but of different curvature. Lamella construction is thus more of an art than science as there is no analytical method available for true generation of schedule of cutting lengths and curvature of curved members forming the lamella grid. Dependence of an engineer on the practical ingenuity of master carpenter is almost final. All the lamella joints shall be accurately cut and fitted to give full bearing without excessive deformation or slip. Bolts at lamella splices shall be adequate to hold the members in their proper position and shall not be over tightened to cause bending of the lamellas or mashing of wood under the bolt heads. Connection of lamellas to the end arches shall be adequate to transmit the thrust or any other force. Sufficient false work or sliding jig shall be provided for the support of lamella roof during actual construction/erection. To avoid excessive deformation in a lamella system, all joints should be carefully fitted and well tightened.

18 NAIL AND SCREW HOLDING POWER OF TIMBER

18.1 General

One of the most common ways of joining timber pieces to one another is by means of common wire nails and wood screws. Timber is used for structural and non-structural purposes in form of scantlings, rafters, joists, boarding, crating and packing cases, etc, needing suitable methods of joining them. Nevertheless it is the timber which holds the nails or screws and as such pulling of the nails/screws is the chief factor which come into play predominantly. In structural nailed joints, nails are essentially loaded laterally, the design data for which is already available in good practice [6-3A(7)]. Data on holding power of nails/screws in different species is also useful for common commercial purposes. The resistance of mechanical fastenings is a function of the specific gravity of wood, direction of penetration with respect to the grain direction, depth of penetration and the diameter of fastener assuming that the spacing of fasteners should be adequate to preclude splitting of wood.

18.2 Nails

Nails are probably the most common and familiar fastener. They are of many types and sizes in accordance with the accepted standard [6-3A(18)]. In general nails give stronger joints when driven into the side grain of wood than into the end grain. Nails perform best when loaded laterally as compared to axial withdrawal so the nailed joints should be designed for lateral nail bearing in structural design. Information on withdrawal resistance of nails is available and joints may be designed for that kind of loading as and when necessary.

18.3 Screw

Next to the hammer driven nails, the wood screw may be the most commonly used fastener. Wood screws are seldom used in structural work because of their primary advantage is in withdrawal resistance for example for fixing of ceiling boards to joists, purlin cleats, besides the door hinges, etc. They are of considerable structural importance in fixture design and manufacture. Wood screws are generally finished in a variety of head shapes and manufactured in various lengths for different screw diameters or gauges in accordance with the accepted standards [6-3A(19)].

The withdrawal resistance of wood screws is a function of screw diameter, length of engagement of the threaded portion into the member, and the specific gravity of the species of wood. Withdrawal load capacity of wood screws are available for some species and joints may be designed accordingly. End grain load on wood screws are un-reliable and wood screws shall not be used for that purpose.

18.4 Nail and screw holding power is one of the very important properties of timber which governs its utilization in diverse industrial and engineering fields. This has been evaluated by experimental method followed for evaluation of such properties as per normal procedure given in the accepted standards [6-3A(20)], using,

a) *Specimen* — Of size 150 mm × 50 mm × 50 mm;

b) *Nail* — Diamond pointed wire nail of 50 mm length and 2.50 mm shank diameter;

c) *Screw* — Galvanized gimlet pointed, No. 8; and

d) *Conditions* — Penetration 25 mm. While nails were driven by a hand hammer, screws were driven by a screw driver in a 2.5 mm diameter prebore on radial. tangential and end faces.

Composite nail and screw holding power of some Indian timbers, evaluated as above, is presented in Table 23 for guidance in design.

19 PROTECTION AGAINST TERMITE ATTACK IN BUILDINGS

19.1 Two groups of organisms which affect the mechanical and aesthetic properties of wood in houses

Table 23 Composite Nail and Screw Holding Power of Some Indian Timbers

(*Clause* 18.4)

Sl No.	Timber Species	Locality	Standard Specific Gravity (Weight Oven Dry)/ Volume Green	Composite Holding Power N	
				Nail	Screw
(1)	(2)	(3)	(4)	(5)	
i)	*Acacia catechu* (Khair)	UP	0.888	2 119	5 454
ii)	*Acacia ferruginea*	Maharashtra	0.876	1 893	5 700
iii)	*Acacia leucophloea*	MP	0.660	1 776	4 503
iv)	*A. nilotica* (Babul)	UP	0.670	1 815	5 219
v)	*Acrocarpus fraxinifolius* (Mundani)	UP	0.662	1 020	2 865
vi)	*Adina oligocephala*	Arun. Pr.	0.612	1 795	3 453
vii)	*Aesculus indica* (Horse chestnut)	HP	0.428	755	2 119
viii)	*Albizia lucida*	Arun. Pr.	0.501	1 462	3 188
ix)	*Anogeissus sericea*	MP	0.738	1 570	4 944
x)	*Aphanamixis polgstachya* (Pitraj)	WB	0.557	1 648	3 110
xi)	*Araucaria cunning hanvil*	UP	0.486	1 128	2 943
xii)	*Aritocarpus lakoocha* (Lakooch)	UP	0.530	1 050	2 982
xiii)	*Azadirachta indica* (Neem)	UP	0.693	2 001	5 219
xiv)	*Betula alnoides* (Birch)	WB	0.569	1 648	3 237
xv)	*Broussonetia papyrifera*	UP	0.394	746	1 383
xvi)	*Canarium strictum* (White dhup)	Assam	0.486	1 207	2 619
xvii)	*Cassia fistula* (Amaltos)	UP	0.746	2 109	4 748
xviii)	*Cassia siamea*	MP	0.697	1 315	3 649
xix)	*Castanopsis indica* (Indian chestnut)	Megh.	0.591	1 697	3 090
xx)	*Cupressus cashmeriana*	UP	0.409	903	2 325
xxi)	*Dipterocarpus bourdilloni* (Gurjan)	Kerala	0.577	912	2 766
xxii)	*Dipterocarpus indicus* (Gurjan)	Karnataka	0.618	1 109	2 904
xxiii)	*Eucalyptus hybrid*	UP	0.632	1 736	2 453
xxiv)	*Exbucklandia –populnea* (Pipli)·	WB	0.558	1 403	3 443
xxv)	*Fraxinus udheri*	UP	0.539	1 354	3 483
xxvi)	*Gluta travancorica* (Gluta)	TN	0.621	1 324	2 923
xxvii)	*Grewia tiliifolia* (Dhaman)	Karnataka	0.679	1 746	2 884
xxviii)	*Holarhena antidysenterica* (Kurchi)	UP	0.445	1 020	2 698
xxix)	*Lagerstroemia specicosa* (Jarul)	Kerala	0.531	1 697	2 717
xxx)	*Lannea coromendelica* (Jhingan)	Rajasthan	0.497	1 216	2 894
xxxi)	*Magnolia hookeri*	Arun. Pr.	0.403	1 128	1 746
xxxii)	*Mangifera indica* (Mango)	UP	0.411	1 383	2 433
xxxiii)	*Manglietia spp.*	Assam	0.409	912	2 031
xxxiv)	*Mesna assamica* (Sianhor)	Assam	0.687	1 795	3 502
xxxv)	*Michelia champaca* (Champ)	Assam	0.488	1 128	2 737
xxxvi)	*Mimusops elengi*	Karnataka	0.762	2 158	5 101
xxxvii)	*Morus alba* (Mulberry)	UP	0.557	1 030	4 091
xxxviii)	*Morus laevigata* (Bola)	Assam	0.567	932	2 600
xxxix)	*Morus spp.*	UP	0.594	1 589	3 129
xl)	*Nephelium litchi*	UP	0.762	1 825	4 238
xli)	*Oroxylum indicum*	Andaman	0.370	961	1 736
xlii)	*Ougenia oogeinensis* (Sandan)	UP	0.701	1 570	5 317
xliii)	*Pinus kesiya*	Nagaland	0.489	1 089	2 354
xliv)	*Pinus kesiya*	Orissa	0.453	1 118	2 325
xlv)	*Pinus roxburghii* (Chir)	UP	0.453	1 128	2 482
xlvi)	*Pinus wallichiana* (Kail)	HP	0.468	873	1 521
xlvii)	*Pistacia integerrima*	J & K	0.733	1 324	4 120
xlviii)	*Polyalthia spp.* (Debdara)	MP	0.586	1 452	2 953
xlix)	*Pometa pinnata*	Andaman	0.636	1 579	3 532
l)	*Prunus nepalensis* (Arupati)	WB	0.482	1 099	2 531
li)	*Pterocarpus marsupium*	Bihar	0.587	1 305	2 982
lii)	*Pterygota alata* (Narikel)	Assam	0.475	1 403	3 463
liii)	*Pterygota alata* (Narikel)	Kerala		1 089	2 639
liv)	*Robinia spp.*	J & K	0.629	2 227	3 777
lv)	*Sageraea elliptica* (Chooi)	Andaman	0.682	1 805	4 522
lvi)	*Schleichera oleosa* (Kusum)	Bihar	0.841	1 884	4 277
lvii)	*Shorea robusta* (Sal)	UP	0.774	1 216	3 620
lviii)	*Soymida ferifuga*	TN	0.965	1 687	6 033
lix)	*Tectona grandis* (Teak)	UP	0.574	1 020	3 404

Table 23 — (*Concluded*)

(1)	(2)	(3)	(4)	(5)	(6)
lx)	*Tectona grandis* (Teak)	TN	0.633	1 364	3 483
lxi)	*Tectona grandis* (Teak)	Maharashtra	0.526	971	3 728
lxii)	*Terminalia alata* (Laurel)	UP	0.806	2 521	3 806
lxiii)	*Terminalia citrina*	Assam	0.629	1 540	3 855
lxiv)	*Terminalia paniculata* (Kindal)	Kerala	0.630	1 982	3 257
lxv)	*Tetrameles nudiflora* (Maina)	Assam	0.289	667	1 413
lxvi)	*Thespesia populnea* (Bhendi)	Maharashtra	0.647	1 923	5 425
lxvii)	*Tsuga brunonsiana*	WB	0.380	540	2 050
lxviii)	*Ulmus coallichiana* (Elm)	HP	0.455	834	1 766
lxix)	*Zanthoxylum spp.*	WB	0.496	1 138	3 071

are fungi and insects. The most important wood destroying insects belong to termites and beetles. Of about 250 species of wood destroying termites recorded in India, not more than a dozen species attack building causing about 90 percent of the damage to timber and other cellulosic materials. Subterranean termites are the most destructive of the insects that infest wood in houses justifying prevention measures to be incorporated in the design and construction of buildings.

19.1.1 Control measures consist in isolating or sealing off the building from termites by chemical and non-chemical construction techniques. It is recognized that 95 percent damage is due to internal travel of the termites from ground upwards rather than external entry through entrance thus calling upon for appropriate control measures in accordance with good practices [6-3A(21)].

19.2 Chemical Methods

Termites live in soil in large colonies and damage the wooden structure in the buildings by eating up the wood or building nests in the wood. Poisoning the soil under and around the building is a normal recommended practice. Spraying of chemical solution in the trenches of foundations in and around walls, areas under floors before and after filling of earth, etc. In already constructed building the treatment can be given by digging trenches all around the building and then giving a liberal dose of chemicals and then closing the trenches.

19.3 Wood Preservatives

Natural resistance against organisms of quite a few wood species provides durability of timber without special protection measure. It is a property of heartwood while sapwood is normally always susceptible to attack by organisms. Preservatives should be well applied with sufficient penetration into timber. For engineers, architects and builders, the following are prime considerations for choice of preservatives:

a) Inflammability of treated timber is not increased and mechanical properties are not decreased;
b) Compatibility with the glue in laminated wood, plywood and board material;
c) Water repellent effect is preferred;
d) Possible suitability for priming coat;
e) Possibility of painting and other finishes;
f) Non-corrosive nature in case of metal fasteners; and
g) Influence on plastics, rubber, tiles and concrete.

19.4 Constructional Method

Protection against potential problem of termite attack can simply be carried out by ordinary good construction which prevents a colony from gaining access by,

a) periodic visual observations on termite galleries to be broken off;
b) specially formed and properly installed metal shield at plinth level; and
c) continuous floor slabs, apron floors and termite grooves on periphery of buildings.

LIST OF STANDARDS

The following list records those standards which are acceptable as 'good practice' and 'accepted standards' in the fulfilment of the requirements of the Code. The latest version of a standard shall be adopted at the time of the enforcement of the Code. The standards listed may be used by the Authority for conformance with the requirements of the referred clauses in the Code. In the following list, the number appearing in the first column within parantheses indicates the number of reference in this Subsection.

	IS No.	*Title*
(1)	707 : 2011	Timber technology and utilization of wood, bamboo and cane — Glossary of terms (*third revision*)
(2)	1708 (Parts 1 to 18) : 1986	Methods of testing small clear specimens of timber (*second revision*)
	2408 : 1963	Methods of static tests of timbers in structural sizes
	2455 : 1990	Methods of sampling of model trees and logs for timber testing and their conversion (*second revision*)
(3)	4970 : 1973	Key for identification of commercial timbers (*first revision*)
(4)	287 : 1993	Recommendations for maximum permissible moisture content of timber used for different purposes (*third revision*)
(5)	3629 : 1986	Specification for structural timber in building (*first revision*)
(6)	401 : 2001	Code of practice for preservation of timber (*fourth revision*)
(7)	2366 : 1983	Code of practice for nail-jointed timber construction (*first revision*)
(8)	4983 : 1968	Code of practice for design and construction of nail laminated timber beam (*first revision*)
(9)	11096 : 1984	Code of practice for design construction of bolt-jointed construction
(10)	4907 : 2004	Methods of testing timber connector joints (*first revision*)
(11)	9188 : 1979	Performance requirements for adhesive for structural laminated wood products for use under exterior exposure condition
(12)	14616 : 1999	Specification for laminated veneer lumber
(13)	10701 : 2012	Specification for structural plywood (*first revision*)
	4990 : 2011	Specification for plywood for concrete shuttering works (*third revision*)
(14)	4924	Method of test for nail-jointed timber trusses
	(Part 1) : 1968	Destructive test
	(Part 2) : 1968	Proof test
(15)	12120 : 1987	Code of practice for preservation of plywood and other panel products
(16)	4990 : 2011	Specification for plywood for concrete shuttering works (*third revision*)
(17)	9307 (Parts 1 to 7) : 1979	Methods of test for wood based structural sandwich construction
(18)	723 : 1972	Specification for steel countersunk head wire nails (*first revision*)
(19)	451 : 1999	Technical supply conditions for wood screws (*fourth revision*)
	6736 : 1972	Specification for slotted countersunk head wood screw
	6739 : 1972	Specification for slotted round head wood screw
	6760 : 1972	Specification for slotted countersunk head wood screws
(20)	1708 (Parts 1 to 18) : 1986	Methods of testing small clear specimens of timber (*second revision*)
(21)	6313	Code of practice for anti-termite measures in buildings
	(Part 1) : 1981	Constructional measures (*first revision*)
	(Part 2) : 2013	Pre-constructional chemical treatment measures (*third revision*)
	(Part 3) : 2013	Treatment for existing buildings (*third revision*)

NATIONAL BUILDING CODE OF INDIA

PART 6 STRUCTURAL DESIGN

Section 3 Timber and Bamboo: 3B Bamboo

BUREAU OF INDIAN STANDARDS

CONTENTS

FOREWORD ... 3

1 SCOPE ... 5

2 TERMINOLOGY ... 5

3 SYMBOLS ... 7

4 MATERIALS ... 7

5 PERMISSIBLE STRESSES ... 10

6 DESIGN CONSIDERATIONS ... 11

7 DESIGN, TECHNIQUES OF JOINTS AND CONSTRUCTION PRACTICES ... 14

8 BAMBOO AS REINFORCEMENT IN CONCRETE ... 19

9 WALLING, FLOORING, ROOFING, AND IN-FILL PANELS FOR WALL, AND COMMON ROOF COVERING/CLADDING ... 21

ANNEX A SOURCE AND LOCAL NAMES OF SOME OF THE SPECIES OF BAMBOO ... 26

ANNEX B RECOMMENDATIONS FOR BAMBOO STRUCTURES IN HIGH WIND/CYCLONE PRONE AREAS ... 28

LIST OF STANDARDS ... 29

FOREWORD

This Code (Part 6/Subsection 3B) covers the general principles involved in the design of structural bamboo in buildings with regard to mechanical resistance and durability of structures. Design of both bamboo (round bamboo, split bamboo, glued laminated bamboo) and bamboo-based panels joined together with adhesives or mechanical fasteners are covered in this Subsection. It also covers minimum strength data. dimensional stability, grading requirements and traditional bamboo joints for quality assurance. Constructional aspects using bamboo, such as, work on site, fabrication of components off-site and their erection on site is also covered to the extent necessary to indicate and ensure the quality of material and standard of workmanship to comply with the assumptions of the design rules and the limitations.

Bamboo is a versatile resource possessing high strength-to-weight ratio and cost ratio and offers considerable ease in working with simpler tools. It has a long and well established tradition as a building material. The application of bamboo as a constructional material is largely based on established traditions and intuitions of forefathers throughout the tropical and sub-tropical regions.

Resilience coupled with light weight makes bamboo an ideal material for housing in disaster prone/earthquake prone areas. It has the capacity to withstand repetitive loadings and absorb more energy and show larger deflections before collapse and as such is safer under earth tremors. As the design guidelines were inadequate, the application of bamboo as an engineering material was largely based on practical and engineering experience. A need was therefore felt to develop a Code for design and construction with bamboo so as to cater to a number of social and trade advantages, engineering recognition and the improved status of bamboo as an engineering material. This was achieved by adding a new chapter in the last revision of the Code, covering structural design with bamboo. Forest Research Institute, Dehradun and some other organizations were engaged in bamboo research to establish its silviculture, botanical, entomological and pathological aspects besides creating a utilization base. All these works were utilized in the preparation of the last version of this Subsection of the Code.

Some of the suitable species grown in India and neighbouring countries are enlisted in Annex A along with their local names and source, for general information.

The bamboo culm has a tubular structure consisting essentially of nodes and inter-nodes. In the inter-nodes the cells are axially oriented while the nodes provide the transverse inter-connection. The disposition of the nodes and the wall thickness are significant in imparting strength to bamboo against bending and crushing. In a circular cross-section, bamboo is generally hollow and for structural purposes this form is quite effective and advantageous. Each of the species of bamboo has widely different characteristics affecting its usefulness as constructional material. The strength of bamboo culms, their straightness, lightness combined with hardness, range and size of hollowness make them potentially suitable for a variety of applications both structural and non-structural. With good physical and mechanical properties, low shrinkage and good average density, bamboo is well suited to replace wood in several applications, especially in slats and panel form. Mass production of bamboo components, if required, may be integrated with treatment facilities near to the site of plantation or site of construction, for speed and economy in construction.

The Section on structural design with bamboo was first published in 2005 as Subsection 3B of Part 6. In the 1983 version of the Code, timber was covered under Section 3 of Part 6 'Structural Design' under the title 'Wood', which did not cover bamboo. In the last version of 2005, the scope of Section 3 was enlarged as Section 3 'Timber and Bamboo', which was subdivided into Subsection 3A 'Timber' and Subsection 3B 'Bamboo'. This Subsection pertains to 'Bamboo'.

As a result of experience gained in implementation of 2005 version of this Code and further research work done and feedback received as well as formulation of new standards in the field and revision/updation of some of the existing standards, a need to revise this Subsection was felt. This revision has, therefore, been brought out to take care of these aspects.

The significant changes incorporated in this revision include the following:

a) This Subsection now also covers construction practices with bamboo which were earlier covered in Part 7 'Construction Management, Practices and Safety' of the Code.
b) Definitions of some existing terms have been modified as per the prevailing engineering practice and new terms relating to bamboo based panel products have been added.
c) Provisions on bamboo trusses have been further updated.
d) Some details about bamboo foundations have been included.
e) Use of bamboo as reinforcement in concrete has been included.
f) Provisions for use of bamboo based materials/panel products as walling, flooring and roofing, and in in-fill panels for wall and common roof covering/cladding materials, have been included. Some provisions for reconstituted wood from destructured bamboo have also been included.
g) References to all the concerned Indian Standards have been updated.

With the standardization on design and construction aspects of bamboo in this Subsection of the Code, it is expected to ensure durable structures, however, some specific guidelines are required in the event of tropical cyclones in the sub-continent and the traditional non-engineered structures generally constructed. Keeping this in view, some recommendations are given in Annex B which may be followed in addition to provisions given in the main text of this Subsection.

The information contained in this Subsection is largely based on the works carried out at Forest Research Institute, Dehradun, Indian Plywood Industries Research and Training Institute, Bangalore, International Network for Bamboo and Rattan (INBAR) documents and Indian Standards given below. Assistance has also been derived from ISO 22156 : 2004 'Bamboo-Structural design'.

IS 9096 : 2006 Code of practice for preservation of bamboo for structural purpose (*first revision*)

IS 15912 : 2012 Code of practice for structural design using bamboo

All standards, whether given herein above or cross-referred to in the main text of this Subsection, are subject to revision. The parties to agreement based on this Subsection are encouraged to investigate the possibility of applying the most recent editions of the standards.

For the purpose of deciding whether a particular requirement of this Subsection is complied with, the final value, observed or calculated, expressing the result of a test or analysis, shall be rounded off in accordance with IS 2 : 1960 'Rules for rounding off numerical values (*revised*)'. The number of significant places retained in the rounded off value should be the same as that of the specified value in this Subsection.

NATIONAL BUILDING CODE OF INDIA

PART 6 STRUCTURAL DESIGN

Section 3 Timber and Bamboo: 3B Bamboo

1 SCOPE

1.1 This Code (Part 6/Subsection 3B) covers the general principles involved in the design of structural bamboo in buildings with regard to mechanical resistance and durability of structures. Design of both bamboo (round bamboo, split bamboo, glued laminated bamboo) and bamboo-based panels joined together with adhesives or mechanical fasteners are covered in this Subsection. It also covers minimum strength data, dimensional stability, grading requirements and traditional bamboo joints for quality assurance. Constructional aspects using bamboo, such as, work on site, fabrication of components off-site and their erection on site are also covered to the extent necessary to indicate and ensure the quality of material and standard of workmanship to comply with the assumptions of the design rules and the limitations.

1.2 This Subsection also covers precautions and design limitations on bamboo. The provisions relating to proper procurement and storage of bamboo are covered in Part 7 'Construction Management, Practices and Safety' of the Code.

1.3 The following aspects are not covered in this Subsection:

a) Limit state design and performance of structures; and

b) Scientific designing of bamboo joints and their fastenings.

2 TERMINOLOGY

For the purpose of this Subsection, the following definitions shall apply.

2.1 Anatomical Purpose Definitions

2.1.1 *Bamboo* — Tall perennial grasses found in tropical and sub-tropical regions. They belong to the family *Poaceae* and sub-family *Bambusoideae*.

2.1.2 *Bamboo Culm* — A single shoot of bamboo usually hollow except at nodes which are often swollen.

2.1.3 *Bamboo Clump* — A cluster of bamboo culms emanating from two or more rhizomes in the same place.

2.1.4 *Cellulose* — A carbohydrate, forming the fundamental material of all plants and a main source of the mechanical properties of biological materials.

2.1.5 *Cell* — A fundamental structural unit of plant and animal life, consisting of cytoplasm and usually enclosing a central nucleus and being surrounded by a membrane (animal) or a rigid cell wall (plant).

2.1.6 *Cross Wall* — A wall at the node closing the whole inside circumference and completely separating the hollow cavity below from that above (Syn. Diaphragm, that is, horizontal partition in a standing culm) (*see also* **2.2.17** and **2.2.30**).

2.1.7 *Hemi Cellulose* — The polysaccharides consisting of only 150 to 200 sugar molecules, also much less than the 10 000 of cellulose.

2.1.8 *Lignin* — A polymer of phenyl propane units, in its simple form ($C_6H_5CH_3CH_2CH_3$).

2.1.9 *Sliver* — Thin strips of bamboo processed from bamboo culm.

2.1.10 *Tissue* — Group of cells, which in higher plants consist of (a) Parenchyma — a soft cell of higher plants as found in stem pith or fruit pulp, (b) Epidermis — the outermost layer of cells covering the surface of a plant, when there are several layers of tissue.

2.2 Structural Purpose Definitions

2.2.1 *Bamboo Mat Board* — A board made of two or more bamboo mats bonded with an adhesive.

2.2.2 *Bamboo Mat Corrugated Sheet* — A sheet made up of adhesive soaked and coated mats assembled and pressed under specified temperature and pressure to obtain sinusoidal or other suitable corrugations.

2.2.3 *Bamboo Mat Veneer Composite* — Panel manufactured with a combination of bamboo mat and veneer. Bamboo mat can be either as outer skins or as core/cross-bands. However, the composite panel shall be balanced construction on either side of central ply.

2.2.4 *Beam* — A structural member which supports load primarily by its internal resistance to bending.

2.2.5 *Breaking Strength* — A term loosely applied to a given structural member with respect to the ultimate load it can sustain under a given set of conditions.

2.2.6 *Bundle-Column* — A column consisting of three or more number of culms bound as integrated unit with wire or strap type of fastenings.

NOTE — During bunching of beams/columns, binders (5 mm tie bar/wire and 15 mm bamboo dowel pins) may be carefully inserted after proper pre-drilling the holes throughout the assembly as per the requirements of structural design.

2.2.7 *Centre Internode* — A test specimen having its centre between two nodes.

2.2.8 *Characteristic Load* — The value of load which has a 95 percent probability of not exceeding during the life of the structure.

2.2.9 *Characteristic Strength* — The strength of the material below which not more than 5 percent of the test results are expected to fall.

2.2.10 *Cleavability* — The ease with which bamboo can be split along the longitudinal axis. The action of splitting is known as cleavage.

2.2.11 *Column* — A structural member which supports axial load primarily by inducing compressive stress along the fibres.

2.2.12 *Common Rafter* — A roof member which supports roof battens and roof coverings, such as boarding and sheeting.

2.2.13 *Curvature* — The deviation from the straightness of the culm.

2.2.14 *Delamination* — Separation of mats through failure of glue.

2.2.15 *De-Structured bamboo* — Raw material (green bamboo) reduced partially to a condition, as far as practicable, in which the element fibres remain interlocked and in their highly aligned state and which with the help of binder can be reconstituted into a valuable product of a desirable size.

2.2.16 *End Distance* — The distance measured parallel to the fibres of the bamboo from the centre of the fastener to the closest end of the member.

2.2.17 *Flattened Bamboo* — Bamboo consisting of culms that have been cut and unfolded till it is flat. The culm thus is finally spread open, the diaphragms (cross walls) at nodes removed and pressed flat.

2.2.18 *Full Culm* — The naturally available circular section/shape.

2.2.19 *Fundamental or Ultimate Stress* — The stress which is determined on a specified type/size of culms of bamboo, in accordance with standard practice and does not take into account the effects of naturally occurring characteristics and other factors.

2.2.20 *Inner Diameter* — Diameter of internal cavity of a hollow piece of bamboo.

2.2.21 *Inside Location* — Position in buildings in which bamboo remains continuously dry or protected from weather.

2.2.22 *Joint* — A connection between two or more bamboo structural elements.

2.2.23 *Joist* — A small beam directly supporting floor, ceiling or roof of a structure.

2.2.24 *Length of Internode* — Distance between adjacent nodes.

2.2.25 *Loaded End or Compression End Distance* — The distance measured from the centre of the fastener to the end towards which the load induced by the fastener acts.

2.2.26 *Machete* — A light cutting and slashing tool in the form of a large knife.

2.2.27 *Mat* — A woven sheet made using thin slivers.

2.2.28 *Mortise and Tenon* — A joint in which the reduced end (tenon) of one member fits into the corresponding slot (mortise) of the other.

2.2.29 *Net Section* — Section obtained by deducting from the gross cross-section (A), the projected areas of all materials removed by boring, grooving or other means.

2.2.30 *Node* — The place in a bamboo culm where branches sprout and a diaphragm is inside the culm and the walls on both sides of node are thicker.

2.2.31 *Outer Diameter* — Diameter of a cross-section of a piece of bamboo measured from two opposite points on the outer surface.

2.2.31.1 *Mean outer diameter* — The diameter taken twice on the outer surface, in direction perpendicular to each other at each cross-section on both the ends. Thus resulting in mean of four readings for the middle of culm.

2.2.32 *Outside Location* — Position in building in which bamboos are occasionally subjected to wetting and drying as in case of open sheds; and outdoor exposed structures.

2.2.33 *Permissible Stress* — Stress obtained after applying factor of safety to the ultimate stress. This is also the working stress unless adjusted to the particular structural form in design.

2.2.34 *Principal Rafter* — A roof member which supports purlins.

2.2.35 *Purlins* — A roof member directly supporting roof covering or common rafter and roof battens.

2.2.36 *Roof Battens* — A roof member directly supporting tiles, corrugated sheets, slates or other roofing materials.

2.2.37 *Roof Skeleton* — The skeleton consisting of bamboo truss or rafter over which solid bamboo purlins are laid and lashed to the rafter or top chord of a truss by means of galvanized iron wire, cane, grass, bamboo leaves, etc.

2.2.38 *Slenderness Ratio* — The ratio of the length of member to the least radius of gyration is known as slenderness ratio of member (the length of the member is the equivalent length due to end conditions).

2.2.39 *Splits* — The pieces made from quarters by dividing the quarters radially and cutting longitudinally.

2.2.40 *Taper* — The ratio of difference between minimum and maximum outer diameter to length.

2.2.41 *Unloaded End Distance* — The end distance opposite to the loaded end.

2.2.42 *Wall Thickness* — Half the difference between outer diameter and inner diameter of the piece at any cross-section.

2.2.42.1 *Mean wall thickness* — The wall thickness taken four times in the same points as the diameter has been measured. Thus resulting in mean of eight values for the middle of culm.

2.2.43 *Wet Location* — Position in buildings in which the bamboos are almost continuously damp, wet or in contact with earth or water, such as piles and bamboo foundations.

2.3 Definitions Relating to Defects

2.3.1 *Bamboo Bore/Ghoon Hole* — The defect caused by bamboo ghoon beetle (*Dinoderus* spp. *Bostrichidae*), which attacks felled culms.

2.3.2 *Crookedness* — A localized deviation from the straightness in a piece of bamboo.

2.3.3 *Discolouration* — A change from the normal colour of the bamboo which does not impair the strength of bamboo or bamboo composite products.

2.4 Definition Relating to Drying Degrades

2.4.1 *Collapse* — The defect occurring on account of excessive shrinkage, particularly in thick walled immature bamboo. When the bamboo wall shrinks, the outer layers containing a larger concentration of strong fibro-vascular bundles set the weaker interior portion embedded in parenchyma in tension, causing the latter to develop cracks. The interior crack develops into a wide split resulting in a depression on the outer surface. This defect also reduces the structural strength of round bamboo.

2.4.2 *End Splitting* — A split at the end of a bamboo. This is not so common a defect as drying occurs both from outer and interior wall surfaces of bamboo as well as the end at the open ends.

2.4.3 *Surface Cracking* — Fine surface cracks not detrimental to strength. However, the cracking which occurs at the nodes reduces the structural strength.

2.4.4 *Wrinkled and Deformed Surface* — Deformation in cross-section, during drying, which occurs in immature round bamboos of most species; in thick walled pieces, besides this deformation the outer surface becomes uneven and wrinkled. Very often the interior wall develops a crack below these wrinkles, running parallel to the axis.

3 SYMBOLS

For the purpose of this Subsection, the following letter symbols shall have the meaning indicated against each, unless otherwise stated:

A = cross-sectional area of bamboo (perpendicular to the direction of the principal fibres and vessels), mm^2

$= \frac{\pi}{4}\left[D^2 - (D-2w)^2\right]$;

A_B = area of reinforcement in bamboo reinforced cement concrete, mm^2;

D = mean outer diameter of bamboo culm, mm;

d = inner diameter, mm = $(D - 2w)$;

E = modulus of elasticity (MOE) in bending, N/mm^2;

f_c = calculated stress in axial compression, N/ m^2;

f_{cp} = permissible stress in compression along the fibres, N/mm^2;

I = moment of inertia (the second moment of area) of culm section, mm^4

$= \frac{\pi}{64}\left[D^4 - (D-2w)^4\right]$;

ℓ = unsupported length of column, mm;

m = moisture content, percent;

r = radius of gyration, mm

$= \sqrt{\frac{I}{A}}$;

R = modulus of rupture (MOR), N/mm^2;

w = mean of wall thickness of bamboo culm, mm;

Z = section modulus, mm^3

$= \frac{\pi}{32}\left[\frac{D^4 - (D-2w)^4}{D}\right]$; and

δ = deflection or deformation, mm.

4 MATERIALS

The requirements shall be met by the choice of suitable materials, by appropriate design and detailing and by specifying control procedures for production, construction and use.

4.1 Species of Bamboo

More than 100 species of bamboo are native to India and a few of them are solid but most of them are hollow in structure. In all 20 species have been systematically tested so far. Sixteen species of bamboo are recommended for structural usages in round form. Some physical and mechanical properties of the same are given in Table 1 both for air-dry conditions and green conditions.

4.1.1 Matured bamboo of at least 4 years of age shall be used. The bamboo shall be used after at least six weeks of felling period.

4.1.2 Bamboo shall be properly treated in accordance with the good practice [6-3B(1)].

4.1.3 Solid bamboos or bamboos whose wall thickness is comparatively more and which are generally having nodes very closer are often considered good for structural purposes.

4.1.4 Broken, damaged or collapsed bamboo shall be rejected. Dead and immature bamboos, bore/*Ghoon* holes, decay, collapse, checks more than 3 mm in depth, shall be avoided.

4.2 Grouping

4.2.1 Sixteen species of bamboo recommended for structural applications are classified in three groups on the basis of their strength properties, namely, modulus of elasticity (E) in bending in green condition and modulus of rupture (R) (extreme fibre stress in bending). For structural use in piles and mines' components, an additional criterion of compressive strength is considered in classification. The limits in ultimate strength values of these groups shall be as given in Table 2 (these are corresponding to the spread of properties in structural timber).

4.2.2 Bamboo species may be identified using suitable methods.

NOTE — Methods of identification of bamboo through anatomical characters have not been perfected so far. Identification through morphological characters could be done only on full standing culm by experienced sorters.

4.2.3 Species of bamboo other than those listed in the Table 3 may be used, provided their strength characteristics are determined and found more than the limits specified in Table 2.

4.3 Moisture Content in Bamboo

Normally only dry or seasoned bamboo shall be used otherwise special attention shall be given to dimensional changes occurring during the drying process in the joints, assemblies.

With decrease of moisture content, the strength of bamboo increases exponentially and bamboo has an intersection point (fibre saturation point) at around 25 percent moisture content depending upon the species. A typical moisture strength relationship is given at Fig. 1. The moisture content of bamboo shall be determined in accordance with method given in the accepted standard [6-3B(2)]. Matured culms shall be seasoned to about 20 percent moisture content before use.

Freshly felled bamboo with shoots and leaves intact, dry fairly well in the open sun with lesser surface cracking, etc, and reduced starch contents. Rapid drying in the open can control degrades.

4.4 Grading of Structural Bamboo

4.4.1 Bamboo shall be graded to ensure that the properties of bamboo are satisfactory for use particularly the strength and stiffness properties.

4.4.1.1 Grading is sorting out bamboo on the basis of characteristics important for structural utilization as under:

a) Diameter and length of culm;
b) Taper of culm;
c) Straightness of culm;
d) Inter nodal length and distribution of nodes;
e) Wall thickness;
f) Density and strength; and
g) Durability and seasoning.

One of the above characteristics or sometimes combination of two or three characteristics form the basis of grading. The culms shall be segregated species-wise.

4.4.2 *Diameter and Length*

4.4.2.1 *Gradation according to the mean outer diameter*

For structural Group A and Group B species, culms shall be segregated in steps of 10 mm of mean outer diameter as follows:

a) Special grade : 70 mm < Diameter ≤ 100 mm
b) Grade I : 50 mm < Diameter ≤ 70 mm
c) Grade II : 30 mm < Diameter ≤ 50 mm
d) Grade III : Diameter ≤ 30 mm

For structural Group C species culms shall be segregated in steps of 20 mm of mean outer diameter as follows:

1) Grade I : 80 mm < Diameter ≤ 100 mm
2) Grade II : 60 mm < Diameter ≤ 80 mm
3) Grade III : Diameter ≤ 60 mm

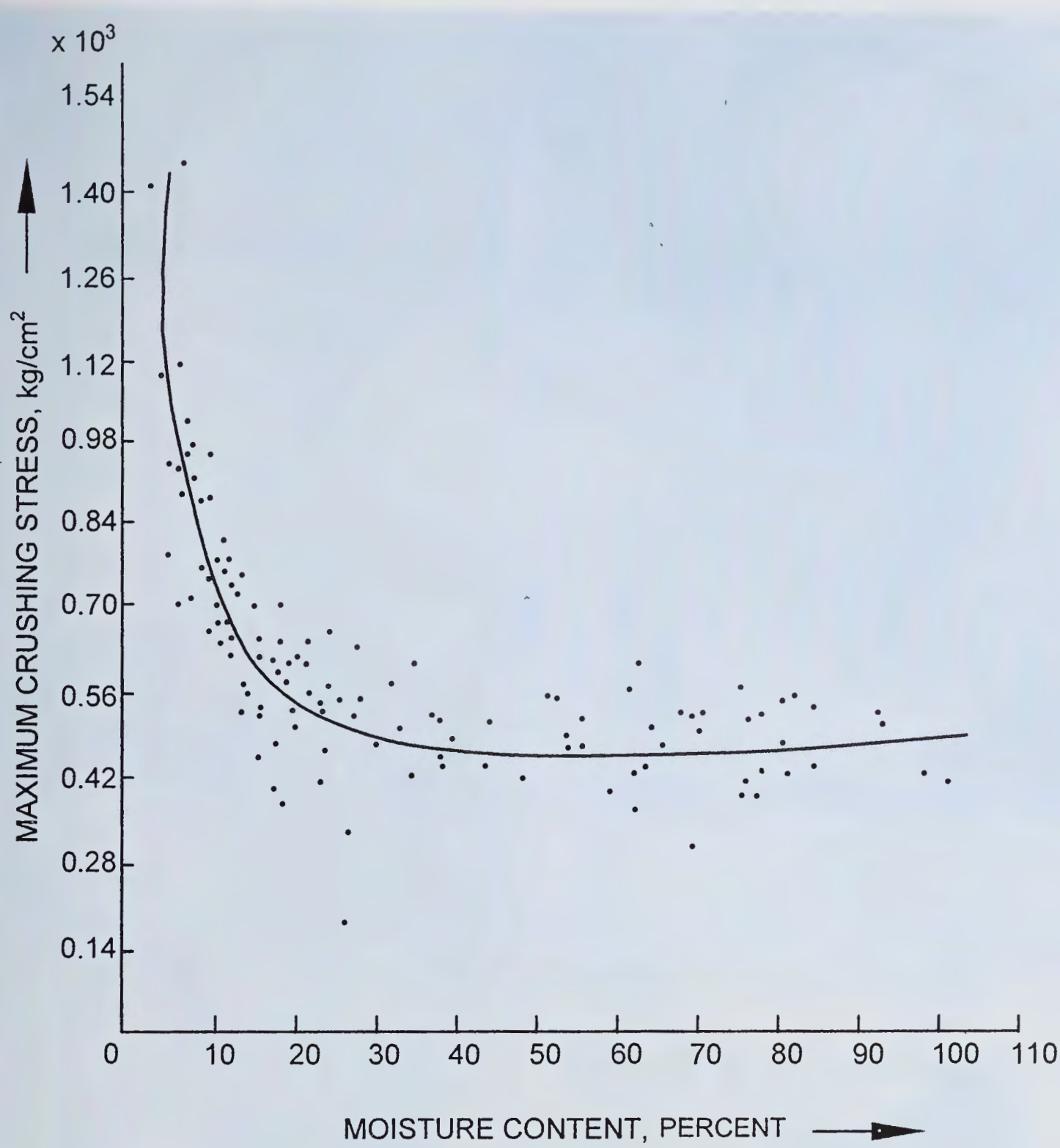

FIG. 1 MOISTURE STRENGTH RELATIONSHIP BAMBUSA NUTANS (BAMBOO)

4.4.2.2 The minimum length of culms shall be preferably 6 m for facilitating close fittings at joints, etc.

4.4.3 *Taper*

The taper shall not be more than 5.8 mm per metre length (or 0.58 percent) (1 in 170) of bamboo in any grade of bamboo.

4.4.4 *Curvature*

The maximum curvature should not be more than 75 mm in a length of 6 m of any grade of bamboo.

NOTE — Due to the constraint of preferential selection of straighter material out of a lot, more bent material may be accommodated to avoid high cost. Following remedial options may be helpful:

a) Adopt component assembly method to take care of some degree of curvature (bunching done after holding components straight).

b) Cut longer bamboo components with less curvature out of taller bamboo and use cambered ones for shorter length components.

4.4.5 *Wall Thickness*

Preferably minimum wall thickness of 8 mm shall be used for load bearing members unless calculations and the availability dictate otherwise.

4.5 Durability and Treatability

4.5.1 *Durability*

The natural durability of bamboo is low and varies between 12 months and 36 months depending on the species and climatic conditions. In tropical countries the bio-deterioration is very severe. Bamboos are generally destroyed in about one to two years' time when used in the open and in contact with ground; while a service life of two to five years can be expected from

bamboo when used under cover and out of contact with ground. The mechanical strength of bamboo deteriorates rapidly with the onset of fungal decay in the sclerenchymatous fibres. Split bamboo is more rapidly destroyed than round bamboo. For making bamboo durable, suitable treatment for preserving bamboo shall be given in accordance with the good practice [6-3B(3)]. However, special attention shall be given to environmental impact and to the health aspects of labour and the users.

4.5.2 To ensure an adequately durable structure, bamboo shall be treated in accordance with the good practice [6-3B(1)] and the following inter-related factors shall be considered:

a) Expected service life of the bamboo;
b) Use of the structure and expected environmental conditions;
c) Required performance criteria; and
d) Quality of workmanship.

4.5.3 Fire safety of bamboo structures shall be ensured, for which the treatment prescribed in **7.3.4** may be followed.

5 PERMISSIBLE STRESSES

5.1 Ultimate stress values of different species and groups of bamboo shall be determined according to the accepted standard [6-3B(2)]. These values shall then be divided by appropriate factors of safety to obtain permissible stresses to cover the effects of variability, long term loading, grade, location of use and expected dynamic loading.

NOTE — As an information, it may be noted that the method of test for split bamboos is covered in the accepted standard [6-3B(4)].

5.1.1 The strength factors for deriving safe working stresses of bamboo shall be as under :

Extreme fibre stress in beams	: 4
Modulus of elasticity	: 4.5
Maximum compressive stress parallel to grain/fibres	: 3.5

5.2 The available data for the safe working stresses for 16 species of bamboos are given in Table 3.

5.3 For change in duration of load other than continuous (long-term), the permissible stresses given in Table 3 shall be multiplied by the modification factors given below:

For permanent loads	: 1.0
For imposed or medium term loading (permanent + temporary load)	: 1.25
For short term loading (permanent + temporary load + wind load)	: 1.50

Table 1 Physical and Mechanical Properties of Indian Bamboos (in Round Form)

(*Clause* 4.1)

Sl No.	Species	Properties							
		In Green Condition				In Air Dry Conditions			
		Density kg/m³	Modulus of Rupture N/mm²	Modulus of Elasticity × 10³ N/mm²	Maximum Compressive Strength N/mm²	Density kg/m³	Modulus of Rupture N/mm²	Modulus of Elasticity × 10³ N/mm²	Maximum Compressive Strength N/mm²
(1)	(2)	(3)	(4)	(5)	(6)	(7)	(8)	(9)	(10)
i)	*Bambusa auriculata*	594	65.1	15.01	36.7	670	89.1	21.41	54.3
ii)	*B. balcooa*	783	65.4	7.31	46.7	—	—	—	60.6
iii)	*B. bambos (Syn. B. arundinacea)*	559	58.3	5.95	35.3	663	80.1	8.96	53.4
iv)	*B. burmanica*	570	59.7	11.01	39.9	672	105.0	17.81	65.2
v)	*B. glancescens (Syn. B. nana)*	691	82.8	14.77	53.9	—	—	—	—
vi)	*B. nutans*	603	52.9	6.62	45.6	673	52.4	10.72	47.9
vii)	*B. pallida*	731	55.2	12.90	54.0	—	—	—	—
viii)	*B. tulda*	658	51.1	7.98	40.7	722	66.7	10.07	68.0
ix)	*B. ventricosa*	626	34.1	3.38	36.1	—	—	—	—
x)	*B. vulgaris*	626	41.5	2.87	38.6	—	—	—	—
xi)	*Cephalostachyum pergracile*	601	52.6	11.16	36.7	640	71.3	19.22	49.4
xii)	*Dendrocalamus longispathus*	711	33.1	5.51	42.1	684	47.8	6.06	61.1
xiii)	*D. strictus*	631	73.4	11.98	35.9	728	119.1	15.00	69.1
xiv)	*Melocanna baccifera*	817	53.2	11.39	53.8	751	57.6	12.93	69.9
xv)	*Oxytenanthera abyssinicia*	688	83.6	14.96	46.6	—	—	—	—
xvi)	*Thyrsostachys oliveri*	733	61.9	9.72	46.9	758	90.0	12.15	58.0

NOTE — The values of stress in N/mm² have been obtained by converting the values in kgf/cm² by dividing the same

Table 2 Properties of Structural Bamboo
(*Clause* 4.2.1)

Sl No.	Group	Modulus of Rupture (R)	Modulus of Elasticity in Bending (E)	Maximum Compressive Strength ($f_{c,max}$)
		N/mm²	× 10³ N/mm²	N/mm²
(1)	(2)	(3)	(4)	(5)
i)	A	$R > 70$	$E > 9$	$MCS > 35$
ii)	B	$70 \geq R > 50$	$9 \geq E > 6$	$35 > MCS > 30$
iii)	C	$50 \geq R > 30$	$6 \geq E > 3$	$30 > MCS > 25$

Table 3 Safe Permissible Stresses of Bamboos for Structural Designing[1)]
(*Clauses* 4.2.3, 5.2 *and* 5.3)

Sl No.	Species	Extreme Fibre Stress in Bending	Modulus of Elasticity	Allowable Compressive Stress
		N/mm²	× 10³ N/mm²	N/mm²
(1)	(2)	(3)	(4)	(5)
i)	Group A:			
	a) *Bambusa glancescens (Syn.B.nana)*	20.7	3.28	15.4
	b) *Dendrocalamus strictus*	18.4	2.66	10.3
	c) *Oxytenanthera abyssinicia*	20.9	3.31	13.3
ii)	Group B:			
	a) *Bambusa balcooa*	16.4	1.62	13.3
	b) *B.pallida*	13.8	2.87	15.4
	c) *B.nutans*	13.2	1.47	13.0
	d) *B.tulda*	12.8	1.77	11.6
	e) *B.auriculata*	16.3	3.34	10.5
	f) *B.burmanica*	14.9	2.45	11.4
	g) *Cephalostachyum pergracile*	13.2	2.48	10.5
	h) *Melocanna baccifera (Syn.M.bambusoides)*	13.3	2.53	15.4
	j) *Thyrsotachys oliveri*	15.5	2.16	13.4
iii)	Group C:			
	a) *Bambusa arundinacea (Syn.B.bambos)*	14.6	1.32	10.1
	b) *B.ventricosa*	8.5	0.75	10.3
	c) *B.vulgaris*	10.4	0 .64	11.0
	d) *Dendrocalamus longispathus*	8.3	1.22	12.0

NOTE — The values of stress in N/mm² have been obtained by converting the values in kgf/cm² by dividing the same by 10.

[1)] The values given pertain to testing of bamboo in green condition.

6 DESIGN CONSIDERATIONS

6.1 Basic Requirements

A structure shall be designed and constructed by personnel having the appropriate skill and experience in such a way that,

a) with acceptable probability, it will remain fit for the use for which it is required, having due regard to its intended life and costs;

b) with appropriate degree of reliability, it will sustain all forces and effects likely to occur during execution and use and have adequate durability in relation to maintenance costs;

c) the structure will be adequately maintained;

d) the structure will be used in accordance with design limit briefs;

e) all structural members, assemblies or framework in a building shall be capable of sustaining, without exceeding the limits of relevant stress specified, the worst combination of all loadings;

f) a fundamental aspect of design will be to determine the forces to which the structure/ structural element might be subjected to, starting from the roof and working down to the soil by transferring the forces through various components and connections;

g) accepted principles of mechanics for analysis and specified design procedures shall be applied (or) the design requirements may be satisfied by prototype testing;

h) loads shall be in accordance with Part 6 'Structural Design, Section 1 Loads, Forces and Effects' of the Code, keeping into consideration that permeability of walls, floors and roof made from bamboo cause internal pressure and can therefore affect the wind load factor; and

j) The worst combination and location of loads shall be considered for design. Also, wind and seismic forces shall not be considered to act simultaneously.

6.2 Unlike timber, bamboo properties do not relate well to species, being dependent among other factors, on position of the culm, geographic location and age. The practice in timber engineering is to base designs on safe working stresses (*see* Note) and the same may be adopted to bamboo with the limitations that traditional experience rather than precise calculations generally govern the detailing.

NOTE — Limit states are states beyond which the structure no longer satisfies the design performance requirements. Limit states are classified into ultimate limit state relating to collapse mode and serviceability limit states associated with deformations, vibrations, etc. Design is usually based on ultimate stages with partial factors of safety.

6.3 Age old traditional experience of construction with bamboo is to be well preserved as non-standard practices for similar situations considered as an informal based on general social pattern and wisdom. Confirmation of such structures be based on reports after they have sustained the severity of earthquakes,

hurricanes, etc, as criteria for recommendations by the evaluation by competent engineer/builder with adequate experience in the field.

6.4 Net Section

It is determined by passing a plane or a series of connected planes transversely through the members. Least net sectional area is used for calculating load carrying capacity of a member. In the design of an intermediate or a long column, gross section shall be used in calculating load carrying capacity of column.

6.5 Structural Components

6.5.1 Main structural applications in bamboo may include roofing and flooring, shear walls, wall paneling, beams, piles, columns, arches, etc. Both from the point of view of capacity and deformation, trusses and framed skeletons are much better options in bamboo.

6.5.2 *Peculiarity of Bamboo as a Design Material*

This shall be based on the principles of applied mechanics involving the following assumptions:

a) Elastic behaviour of bamboo, until failure (plastic behaviour being considered to be not significant);

b) Bamboo culms are analysed as hollow-tube structures (not perfectly straight) member on mean diameter and mean wall thickness basis. Designing as a variable thickness hollow-tube structure is a bit complex;

c) Nodes do not occur at constant intervals;

d) Structural elements of bamboo shall be appropriately supported near the nodes of culm as and where the structural system demands. The joints in the design shall be located near nodes;

e) Bamboo structures are designed like any other conventional structural analysis taking care of details with regards to supports and joints; and the diameter, wall thickness and initial curvature; and

f) Joints shall be considered to generally act as a hinge or as pinned, unless substantiating data justify a fixed joint.

6.6 Flexural Members

6.6.1 All flexural members may be designed using the principles of beam theory.

NOTE — The tendency of bamboo beams to acquire larger deflections under long continual loading (including creep) has to be taken care of either by giving a factor of safety to E or by considering double the design dead loading in calculation of deflections.

6.6.2 The moment of inertia, I shall be determined as follows:

a) Outside diameter and the wall thickness shall be measured at both ends, correct up to 1 mm for diameter of culm and 0.1 mm for the wall thickness.

b) With these values the mean diameter and the mean thickness for the middle of the beam shall be calculated and moment of inertia determined.

6.6.3 The maximum bending stress shall be calculated and should be within the allowable stress.

6.6.4 The deflection shall be within the prescribed limits. The initial curvature shall also be considered in the calculation of the deflection.

6.6.5 The shear stress in the neutral layer at the small end shall be checked, if the length of the beam is less than 25 times the diameter at that end.

6.6.6 Forces acting on a beam, being loads or reaction forces at supports, shall act in nodes or as near to nodes as by any means possible.

6.7 Columns (Predominantly Loaded in Axial Direction)

6.7.1 Columns and struts are essential components sustaining compressive forces in a structure. They transfer load to the supporting media.

6.7.2 Design of columns shall be based on one of the following two criteria:

a) Full scale buckling tests on the same species, size and other relevant variables.

b) Calculations, based on the following:

1) Moment of inertia shall be determined as per **6.6.2**.

2) For bamboo columns the best available straight bamboo culms shall be selected.

3) Bending stresses due to initial curvature, eccentricities and induced deflection shall be taken into account, in addition to those due to any lateral load.

NOTE — Unlike timber, MOE has already been provided a factor of safety in case of bamboo. This is on the basis of studies on variability of MOR and MOE. In the case of timber, no factor of safety for MOE was used because there has been an understanding that there is no variability in MOE. Subsequently it was confirmed that MOE varies as the MOR and there is very strong, highly significant correlation between the two. In fact this correlation has formed the basis of development of machine grading of timber world-over. However, somehow the practice of not giving factor of safety to MOE continued in Indian Standard. Later on when the standard on structural use of bamboo was formulated, factor of safety was given both in MOR and MOE on the basis of latest variability studies on strength of bamboo.

6.7.3 Buckling calculation shall be according to Euler, with a reduction to 90 percent of moment of inertia, to take into account the effect of the taper which shall be less than 1:170.

6.7.4 For strength and stability, larger diameter thick walled sections of bamboo with closely spaced nodes shall be used. Alternatively, smaller sections may be tied together as a bundle-column.

6.8 A single bamboo culm is not an optimum component to structurally design different load bearing members. Bunching of bamboo is inevitable to fabricate beams, columns, etc. There is no end to the number of culmns in bunching. However, different components pose manufacturing problems during assembly, which should be appropriately taken care of (*see also* Fig. 9D and Fig. 9E).

6.8.1 Following precautions shall be taken to avoid possible split/crack in walling of bamboo:

a) Maintaining a minimum 100 mm distance of the drills from the end of the main bamboo culms drilled.

b) Choosing drilling points preferably within 30 mm from node.

c) Maintaining the interference fit between bamboo body and binders as under:

1) For wall thickness ≥ 8 mm : 0.25-0.30 mm, and

2) For wall thickness < 8 mm : 0.20-0.25 mm.

d) The inserting ends of the dowel pins may be dressed as tapered (conical).

6.9 Assemblies and Roof Trusses

6.9.1 Elements in structure are generally built-up in the form of assembled members for which a triangle is a simple figure of stability. Besides sloped chords, parallel chord construction is also appropriate as external profile.

6.9.2 A truss is essentially a plane structure which is very stiff in the plane of the members, that is the plane in which it is expected to carry load, but very flexible in every other direction. Roof truss generally consists of a number of triangulated frames, the members of which are fastened at ends and the nature of stresses at joints is either tensile or compressive and designed as pin-ended joints (*see* Fig. 2A). Bamboo trusses may also be formed using bamboo mat board or bamboo mat-veneer composite or plywood gusset (*see* Fig. 2B).

6.9.3 Trusses shall be analysed for the determination of axial forces in members and the deformation of joints. For the influence of eccentricities, due allowance shall be made in design.

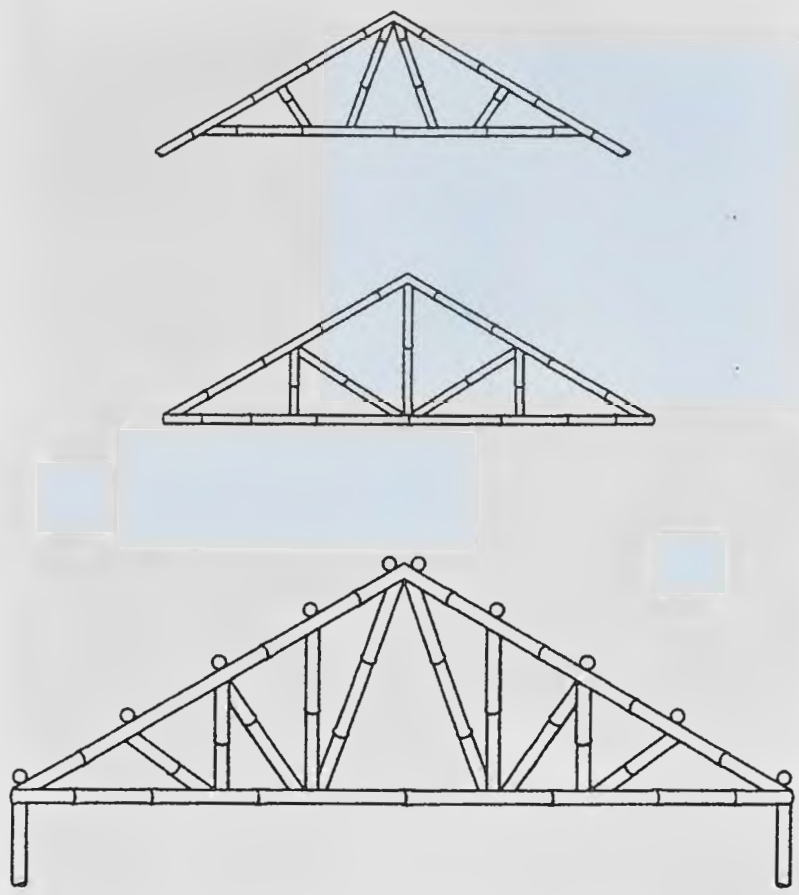

2A PIN ENDED JOINT TRUSSES

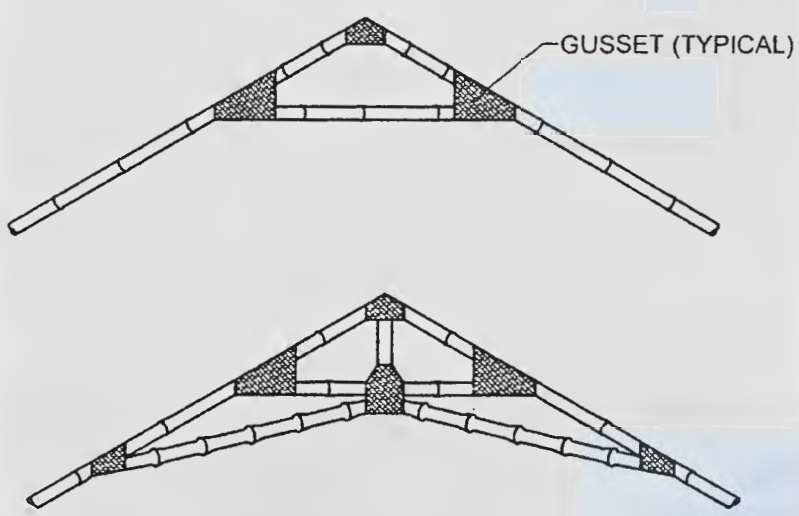

2B GUSSET JOINT TRUSSES

FIG. 2 SOME TYPICAL CONFIGURATIONS FOR SMALL AND LARGE TRUSSES IN BAMBOO

6.9.4 The truss height shall exceed 0.15 times the span in case of a triangular truss (pitched roofing) and 0.10 times the span in case of a rectangular (parallel) truss.

6.9.5 For members in compression, the effective length for in-plane strength verification shall be taken as the distance between two adjacent points of contraflexure. For fully triangulated trusses, effective length for simple span members without especially rigid end-connection shall be taken as the span length.

6.9.6 The spacing of trusses shall be consistent with use of bamboo purlins.

6.9.7 The ends in open beams, joists, rafters, purlins shall be suitably plugged. Bamboo roof coverings shall be considered as non-structural in function.

6.9.8 Bamboo trusses with wire bound joints using bamboo pins and/or wooden splice plates fastened with bamboo pins when tested at load for factor of safety of at least 5, result in deflection within permissible range at design load; good recovery but abnormal deflection beyond ultimate load without collapse was observed.

NOTE — This is based on the work done on prototypes of a few bamboo trusses (span 4 m) tested at Forest Research Institute, Dehradun.

7 DESIGN, TECHNIQUES OF JOINTS AND CONSTRUCTION PRACTICES

7.1 Connecting the load-bearing elements together for effective transfer of stress and to achieve continuity between elements with controlled displacements is one of the serious problem. As joints are a source of weakness in any bamboo structure, they have to be made as strong and rigid as possible. Joints are quite critical in assemblies, and these should be stable in relation to time. For general information, the diagrams of typical joints given in Figs. 3 to 7 may be used based on tests for adequacy of strength.

7.2 Bamboo Joints

Susceptibility to crushing at the open ends, splitting tendency, variation in diameter, wall thickness and straightness are some of the associated issues which have to be taken care of while designing and detailing the connections with bamboo.

Joints shall be designed to include force transmissions in a required manner, predictable deformations to be within prescribed limits and specific geometry/load direction.

Tests on full scale joints or on components shall be carried out in accordance with the good practice [6-3B(5)] and the accepted standards [6-3B(6)] for nailed jointed timber structures.

7.2.1 *Traditional Practices*

Such joining methods revolve around lashing or tying by rope or string with or without pegs or dowels. Such joints lack stiffness and have low efficiency but have served the mankind for long in traditional bamboo construction.

7.2.1.1 *Lengthening joints (end jointing)* (*see* Fig. 3)

7.2.1.1.1 *Lap joint*

End of one piece of bamboo is made to lap over that of the other in line and the whole is suitably fastened. It may be full lapping or half lapping. Full section culms are overlapped by at least one internode and tied together in two or three places. Efficiency could be improved by using bamboo or hardwood dowels.

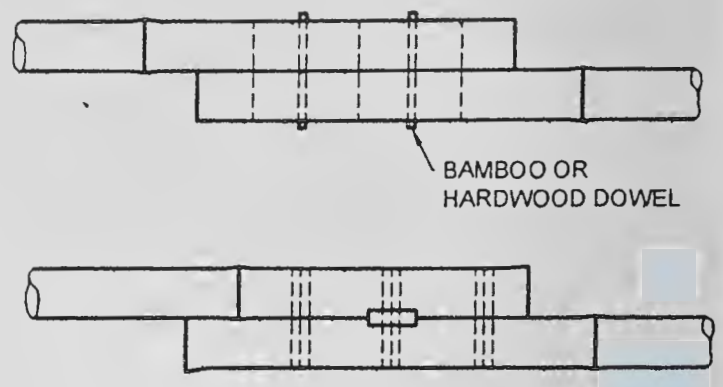

3A FULL LAPPED JOINT

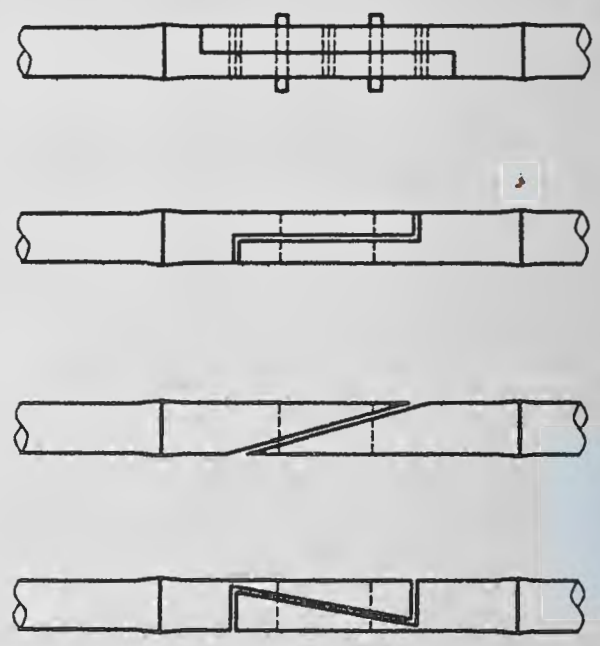

3B HALF LAPPED JOINT
(REBATED/SPLAYED)

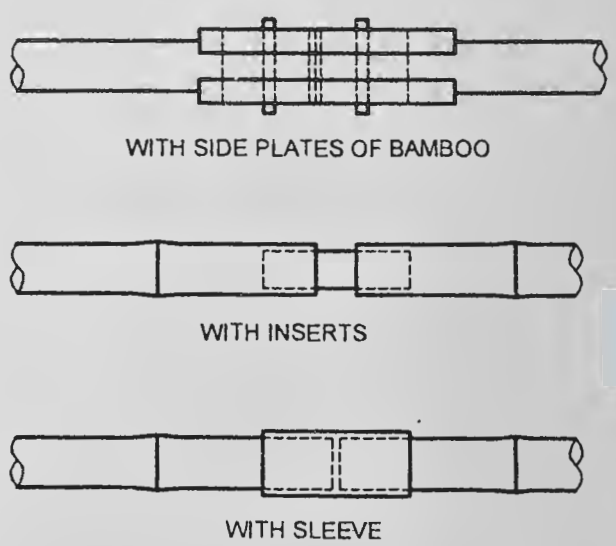

3C SPLICED JOINTS

FIG. 3 SPLICED JOINTS

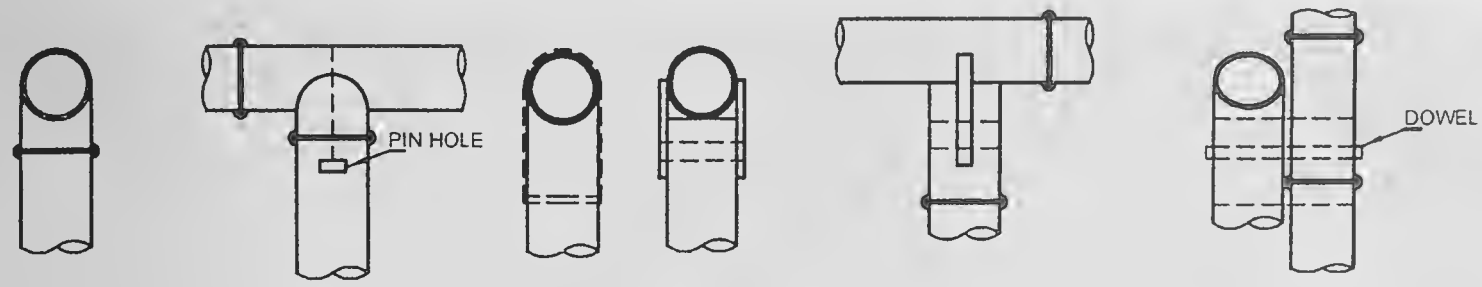

4A SADDLE JOINT WITH LASHING AND SIDE PLATES OR SEATED JOINTS

4B BEAM SUPPORTED ON INDEPENDENT SHORT CULM TIED TO THE POST

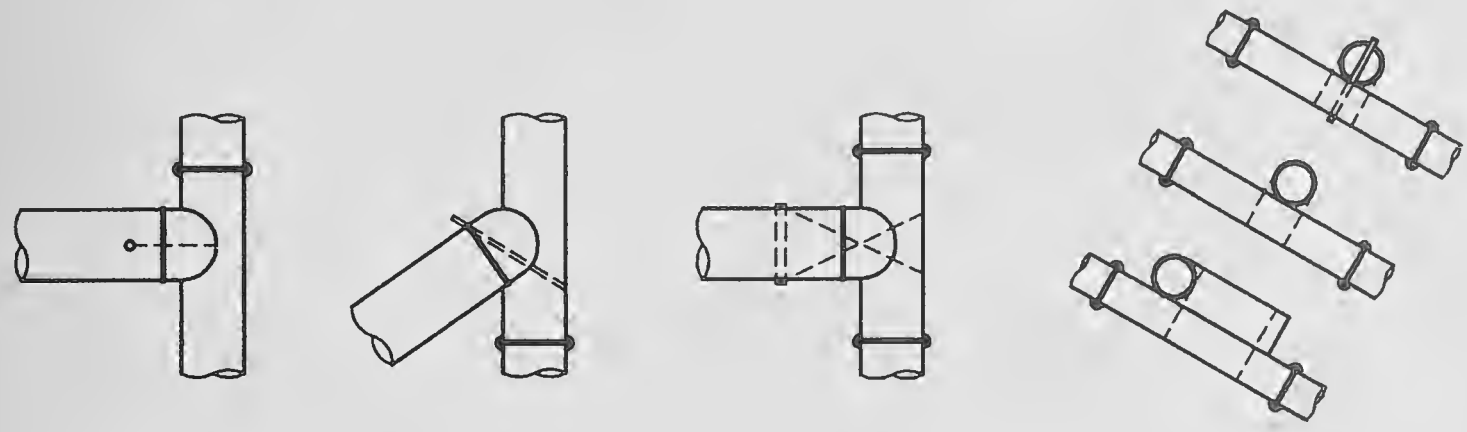

4C TIES PASSING THROUGH A PRE-DRILLED HOLE OR AROUND PEG

4D PEGGED AND TIED SYSTEM

4E DOWELLED AND TIED SYSTEM

4F PURLIN TIED TO RAFTER

FIG. 4 BEARING JOINTS

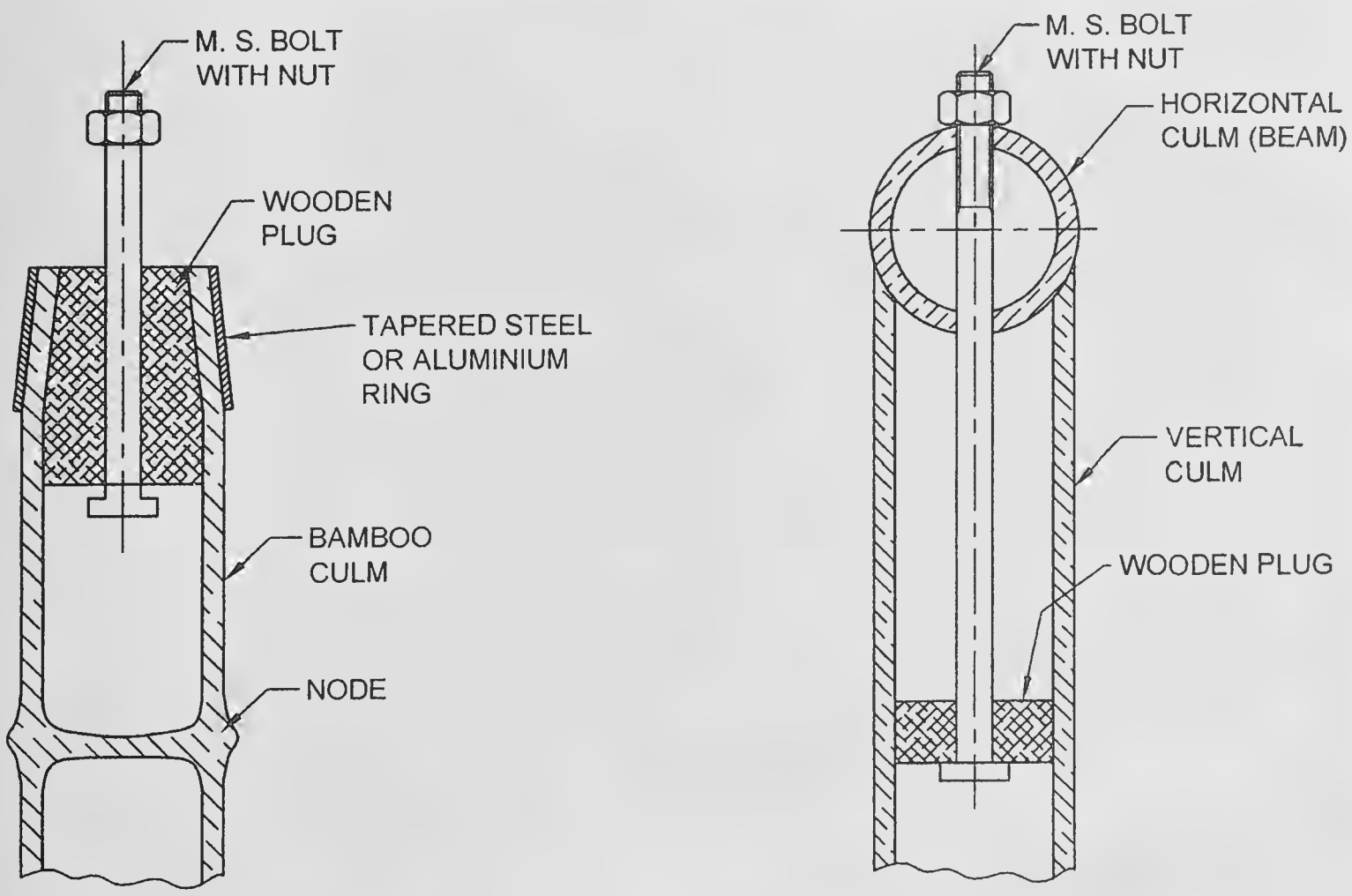

5A SYSTEM WITH NARROWED END

5B ARRANGEMENT FOR BEARING WITH USE OF NUT AND BOLT

FIG. 5 SOME NUT BOLT JOINERY DETAILS

6A LASHED JOINT

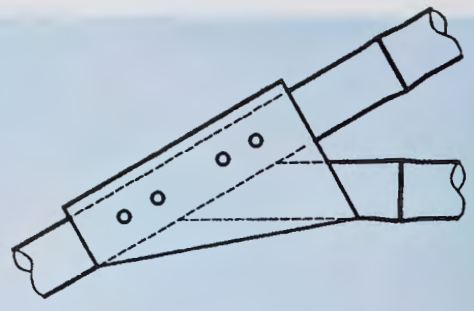

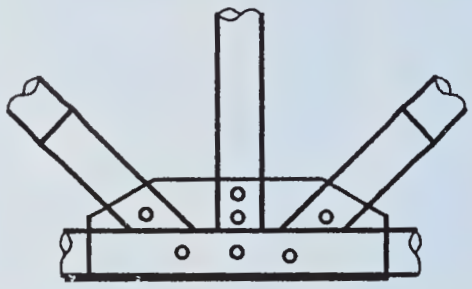

6B TRUST CHORD AND WEB CONNECTIONS

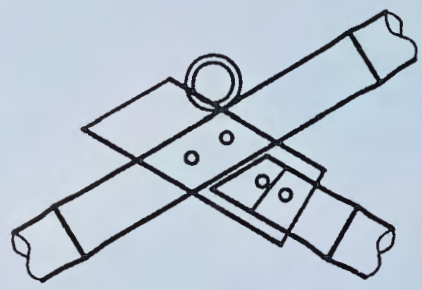

6C SOLID TIMBER OR SHUTTERING GRADE PLYWOOD PLATES FIXED WITH EITHER MS BOLTS OR BAMBOO PEGS

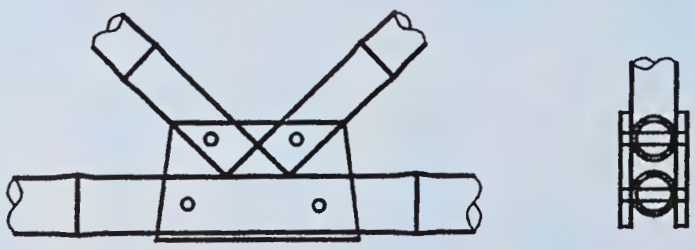

6D GUSSET PLATED JOINT

FIG. 6 GUSSET PLATED JOINTS

7.2.1.1.2 *Butt joints*

Culms of similar diameter are butted end to end, interconnected by means of side plates made of quarter-round culm of slightly large diameter bamboo, for two or more internode lengths. Assembly shall be fixed and tied preferably with dowel pins.

7.2.1.1.3 *Sleeves and inserts*

Short length of bamboo of appropriate diameter may be used either externally or internally to join two culms together.

7.2.1.1.4 *Scarf joints*

A scarf joint is formed by cutting a sloping plane 1 in 4 to 6 on opposite sides from the ends of two similar diameter bamboo culms to be joined. They shall be lapped to form a continuous piece and the assembly suitably fastened by means of lashings or glued.

7.2.1.2 *Bearing joints (see Fig. 4)*

For members which either bear against the other or cross each other and transfer the loads at an angle other than parallel to the axis, bearing joints are formed.

7.2.1.2.1 *Saddle joints*

The simplest form consists of a horizontal member supported directly on top of a vertical member. The top of the post may be cut to form a saddle to ensure proper seating of beam for good load transfer. The saddle should be close to a node to reduce risk of splitting.

7.2.1.2.2 *Angled joints*

When two or more members meet or cross other than at right angles, angled joints are formed.

7.2.2 *Improved Practices in Bamboo Jointing*

a) Plywood or solid timber gusset plates may be used at joint assemblies of web and chord connection in a truss and fixed with bamboo pins or MS (mild steel) bolts. Hollow cavities of bamboo need to be stuffed with wooden plugs or otherwise by suitable means.

b) Use of wooden inserts to reinforce the ends of the bamboo before forming the joints. Alternatively, steel bands clamps with integral bolt/eye may be fitted around bamboo sections for jointing.

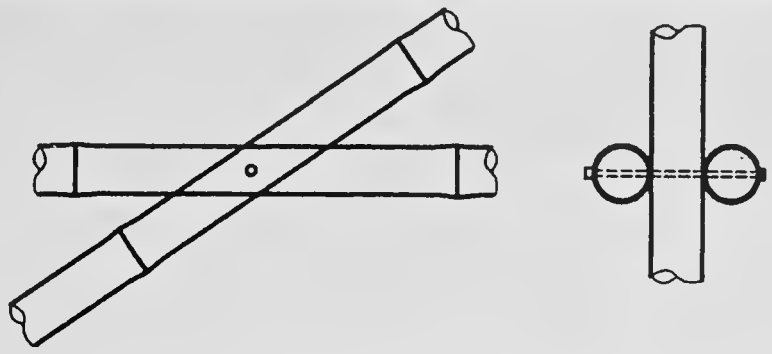

7A SIMPLY BOLTED CONNECTION WITH MS ARC WASHERS

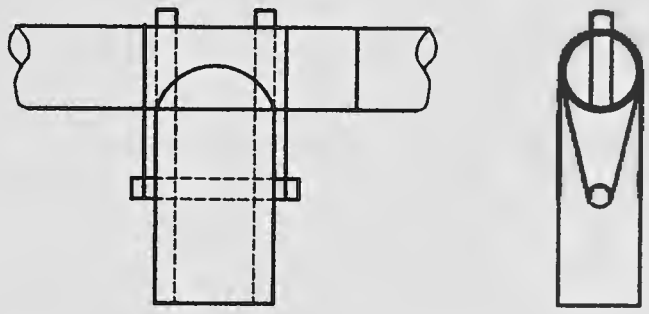

7B HORNED JOINT WITH PIN AND ROPE LASHING

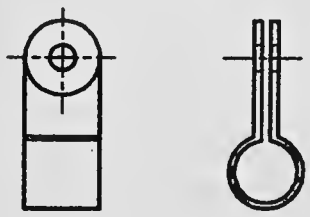

7C STEEL BAND TO BE FITTED AROUND BAMBOO SECTION

7D HARDWOOD DOWEL (SQUARE OR CIRCULAR)

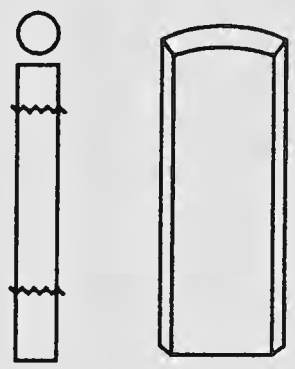

7E SOLID BAMBOO OR SPLIT BAMBOO PINS (WITH SKIN ON)

FIG. 7 OTHER JOINTS AND SECTIONS

7.2.3 *Fixing Methods and Fastening Devices*

In case of butt joints the tie-wire may be passed through a pre-drilled hole or around hardwood or bamboo pegs or dowels inserted into preformed holes to act as horns. Pegs are driven from one side, usually at an angle to increase strength and dowels pass right through the member, usually at right angles. Normally 1.60 mm (16 SWG) diameter galvanized iron wire may be used for tight lashing.

NOTE — Drill size needs to be specified in order to avoid possible split/crack in walling of bamboo.

7.2.3.1 *Wire bound joints with or without pins*

Usually 2.00 mm (14 SWG) diameter galvanized iron wire is tightened around the joints by binding the respective pieces together. At least two holes are drilled in each piece and wire is passed through them for good results. Generally 10-12 mm diameter bamboo pins are driven and fastened to culms.

7.2.3.2 *Fish plates/gusset plated joints (see Fig. 6)*

At least 25 mm thick hardwood splice plate or 12 mm thick structural grade plywood are used. Solid bamboo pins help in fastening the assembly.

7.2.4 For any complete joint alternative for a given load and geometry, description of all fastening-elements, their sizes and location shall be indicated. Data shall be based on full scale tests.

7.2.5 Tests on full scale joints or on components shall be carried out in a recognized laboratory.

7.2.6 In case of high wind and seismic areas, good construction practices shall be followed taking care of joints, their damping and possible ductility. Bracings in walls shall be taken care of in bamboo structures.

7.2.7 Metal fasteners and other structural joints shall be made inherently corrosion resistant or be protected against corrosion, thereby making the joints more durable.

7.3 Construction Practices

7.3.1 Bamboo being a versatile resource characterized by high strength, low mass and ease of working with simple tools, it is desirable to increasingly make appropriate use of this material. Design of structures using bamboo shall be done in accordance with **6**. It shall be ensured that the elements of structure satisfy the appropriate fire resistance requirements as specified in Part 4 'Fire and Life Safety' of the Code, and quality of building materials/components used shall be in accordance with Part 5 'Building Materials' of the Code. For construction using bamboo, some of the important constructional provisions given in **7.3.2** to **7.3.7** shall be followed.

7.3.2 The following sound construction practices shall be taken into account:

a) Use of air dry bamboo; and ensure that bamboo in building remains air dry; and in case the bamboo has become wet, shall provide it the opportunity to dry again before the it deteriorates due to moisture.

b) Permeability of walls, floors and roofs made from bamboo, cause internal pressure and can therefore change the net wind-load acting on the roof, wall and floor.

c) Check whether the workmanship of the labour force is according to the assumptions.

7.3.3 *Working Finishing*

7.3.3.1 Bamboo can be cut and split easily with very simple hand tools. Immature bamboos are soft, pliable and can be moulded to desired shape. It takes polish and paint well.

7.3.3.2 While it is possible to work with bamboo simply using a machete, a few basic tools such as, machete, hack saw, axe, hatchet, sharpening tools, adze, chisel (20 mm), drill, wood rasps, steel rod, and pliers, will greatly increase the effectiveness of the construction process.

7.3.4 For providing safety to the structure against fire, bamboo may be given fire retardant treatment using following chemicals; a few drops of concentrated HCl shall be added to the solution to dissolve the precipitated salts:

Ammonium phosphate	:	3 parts
Boric acid	:	3 parts
Copper sulphate	:	1 part
Zinc chloride	:	5 parts
Sodium dichromate	:	3 parts
Water	:	100 parts

7.3.5 *Foundations*

Bamboo in direct contact with ground, bamboo on rock or preformed concrete footing, bamboo incorporated into concrete, may form the foundation structure (*see* Fig. 8). Also, arrangements with use of metallic strap, C-clamp and bunched bamboo columns embedded in concrete may be used for foundation of bamboo structures (*see* Fig. 9).

7.3.6 *Floors*

The floor of bamboo may be at ground level with covering of bamboo matting, etc. In elevated floors, bamboo members become an integral part of structural framework of building. The floor will comprise structural bamboo elements and bamboo decking.

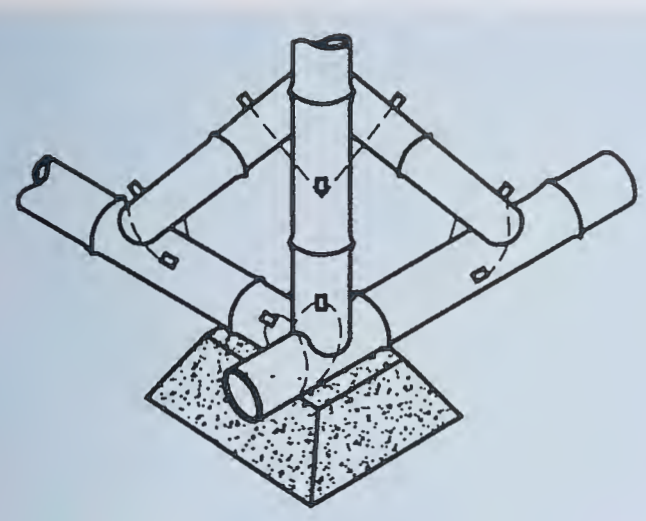

8A BAMBOO ON PREFORMED CONCRETE FOOTINGS

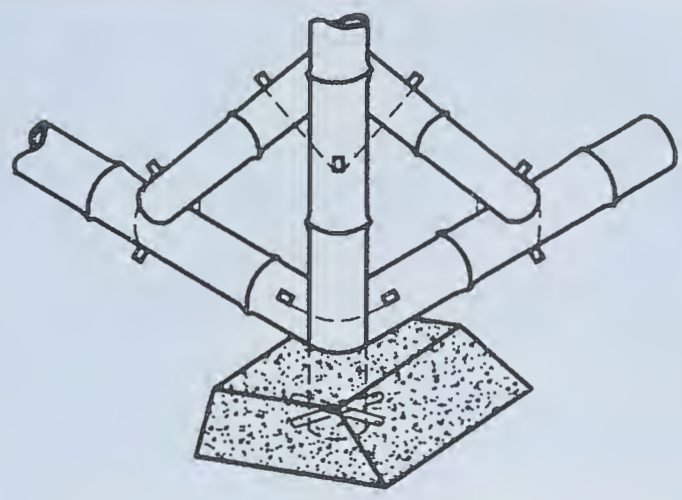

8B BAMBOO INCORPORATED INTO CONCRETE FOOTINGS (SINGLE POST FOOTING)

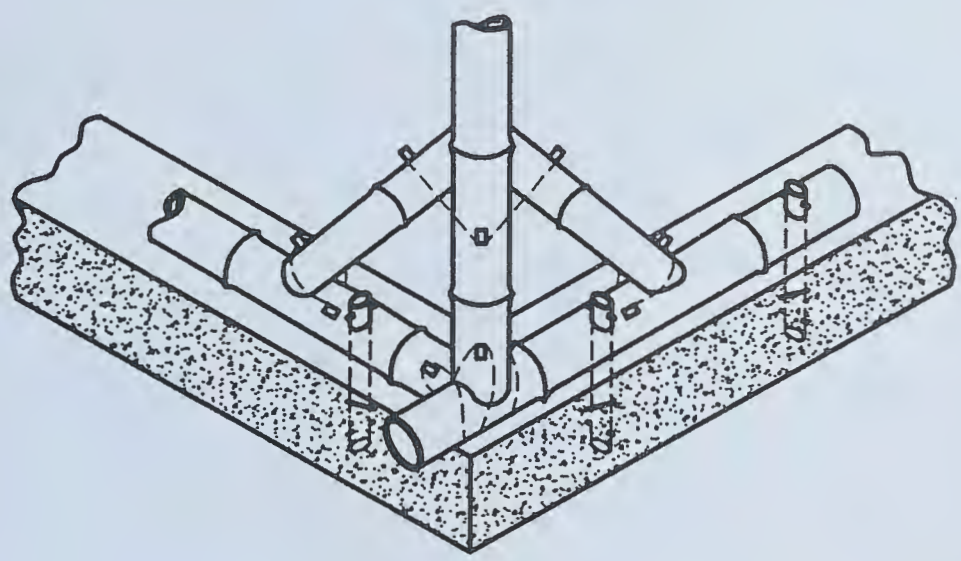

8C BAMBOO OUT OF GROUND CONTACT ON STRIP FOOTINGS OF CONCRETE (LARGE DIAMETER THICK WALLED BAMBOO WITH CLOSELY SPACED NODES TO BE USED)

FIG. 8 BAMBOO FOUNDATIONS

7.3.7 *Jointing Techniques*

The jointing techniques in construction using bamboo shall be in accordance with **7.2**.

8 BAMBOO AS REINFORCEMENT IN CONCRETE

8.1 Due to its fibrous texture, bamboo possesses high tensile strength. This can act as an alternate material for reinforcement in concrete within the limitations of design and construction. The ultimate strength of some of the species of bamboo in direct tension is nearly the same as that of steel at its yield point. On an average it varies from 1 400 to 2 000 kg/cm^2. The principles adopted for design of concrete structure with steel is also applicable for the concrete member with bamboo. Strength characteristics of steel, concrete and bamboo are indicated in Table 4 and the design data for balanced section in beams/slabs reinforcement is given in Table 5.

Table 4 Strength Characteristics of Mild Steel, Bamboo and Concrete (For Reinforcement Purposes)

(*Clause* 8.1)

Sl No.	Related Strength Characteristics kgf/cm^2			
	Stress	Mild Steel	Bamboo (Green)	Mass Concrete
(1)	(2)	(3)	(4)	(5)
i)	Modulus of elasticity	2.1× 10^6	175 750 to 196 640 (for all locations)	—
ii)	Tensile stress	1 265.5 to 1 400	158, Bending-tension (all locations)	—
iii)	Compressive stress	—	105 *(D. strictus)*	50
iv)	Bond stress	—	3.5 (green) to 5.6 (dry) reported (likely to increase up to 10)	4 - 10
v)	Shear stress	—	115-180	5

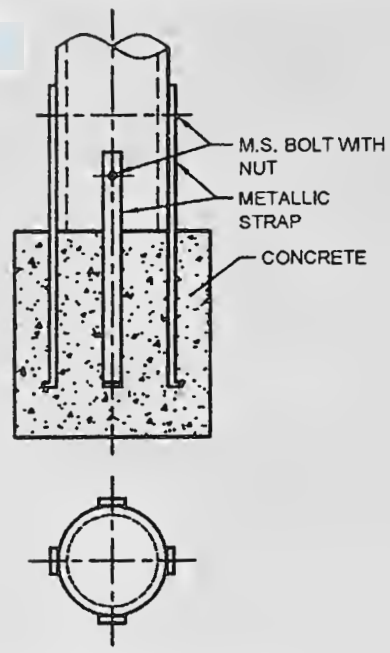

PREFER STAGGERED BOLT HOLES; LOWER PORTION OF BAMBOO-CULM HOT BITUMEN COATED FOR EMBEDMENT IN CONCRETE

9A USING METALLIC STRAP

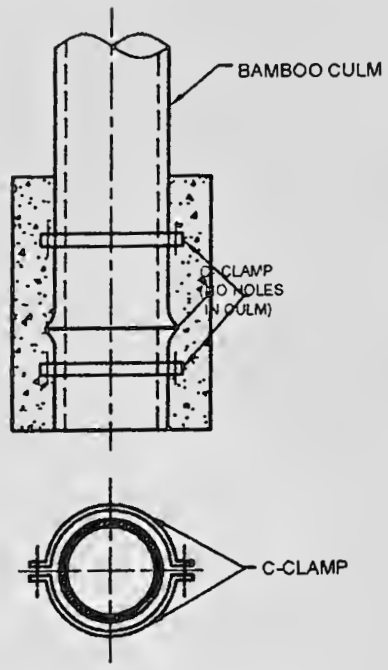

9B USING C-CLAMP

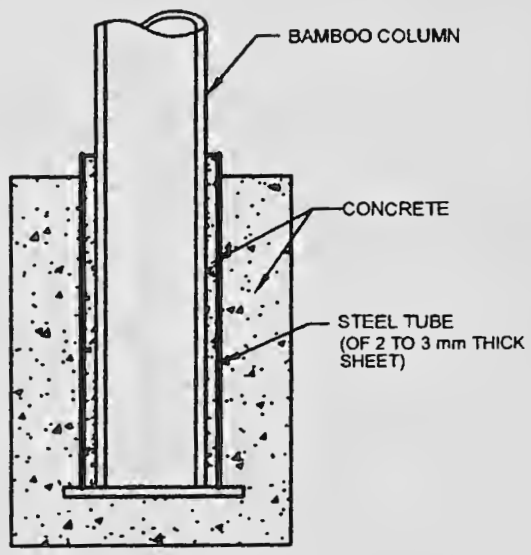

9C USING METAL TUBE

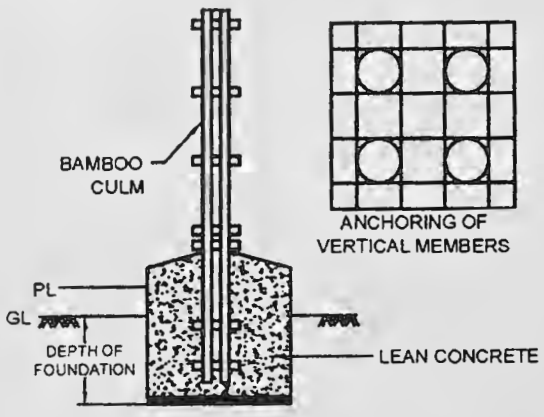

9D BUNCHED BAMBOO COLUMNS EMBEDDED WITHIN CONCRETE

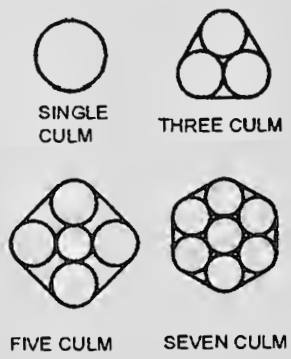

9E INTEGRATED BAMBOO FOR FORMING BUNDLE COLUMNS AND THEIR FASTENING

FIG. 9 BAMBOO COLUMN IN CONCRETE

Table 5 Design Data for Bamboo and Mild Steel Reinforced Cement Concrete for Balanced Section

(*Clause* 8.1)

Sl No.	Design Data for Balanced Section M 15 (1:2:4) Bamboo and Mild Steel Reinforced Cement Concrete		
	Design Parameters	Mild Steel	Bamboo
(1)	(2)	(3)	(4)
i)	Modular ratio	18	1 to 1.4
ii)	Position of neutral axis from the top	0.4*d*	0.25*d* to 0.254*d*
iii)	Lever arm of the resisting moment (MOR)	0.87*d*	0.917*d* to 0.915*d*
iv)	Constant for MOR (*Q*) where (Q = Bending moment/bd^2, d = depth or thickness, and b = width.)	137	86

8.2 The whole bamboo culms are halved longitudinally and again splitted into four and strips of the size of 20 to 25 mm width and 9 mm thickness are prepared for use as reinforcement. Bamboo strips with triangular lugs (formed at nodes) due to conversion of bamboo into strips improve the bond strength because of the protruding lugs beings gripped firmly in concrete. Strength properties of split bamboo out of a few species are given in Table 6.

8.3 Bamboo has a tendency to absorb water from concrete which results in initial swelling and subsequent shrinkage leading to cracks in concrete. Following processes are thus recommended as mandatory:

a) Chemical treatment with preference for pressure impregnation (full cell treatment with warm coal tar creosote is likely to preserve and at the same time act as water repellent).

b) Treated strips be further given a water repellent treatment with a coating of very hot bitumen 80/100 grade, followed by a liberal coating of coarse sand. Water inhibitor will also help maintain dimensional stability of strips.

8.4 Techniques in Placing the Reinforcement (*see also* Fig. 10)

Reinforcement shall be placed in the following manner:

a) Laid edge wise in sets of twin strips for main reinforcement.

b) Laid flatwise with smooth surface and rough surface alternating as distribution or subsidiary reinforcement (wedge effects increased bond).

c) For negative moments, bamboo strips of length equivalent to $\frac{\text{Span}}{6}$ laid flatwise in alternate rows of slab reinforcement.

d) For beams and lintels, twin strips are arranged in tiers, placed one above the other depending upon requirement and held in position with the help of vertical strips.

e) Split bamboo strip or preferably steel rod be used for diagonal tension to resist shear in beams, etc.

f) Bind the reinforcement with the help of galvanized iron binding wire (or nylon thread/ bamboo-cane string).

9 WALLING, FLOORING, ROOFING, AND IN-FILL PANELS FOR WALL, AND COMMON ROOF COVERING/CLADDING

9.1 Materials

9.1.1 *Bamboo Based Panel Products*

The common roof covering and in-fill materials shall include bamboo mat board, bamboo mat veneer

Table 6 Strength Properties of Split Bamboo in Green Condition[1)]

(*Clause* 8.2)

Sl No.	Species	Static Bending			Compression Parallel (Without Node)	Shear Parallel
		Fibre Stress at Elastic Limit kg/cm²	Modulus of Rupture kg/cm²	Modulus of Elasticity × 10³ kg/cm²	Maximum Crushing Stress kg/cm²	Maximum Shearing Stress kg/cm²
(1)	(2)	(3)	(4)	(5)	(6)	(7)
i)	*Bambusa pallida*[2)]	378	605	32.5	595	97.7
ii)	*B. Vulgaris*	464	885	52.3	403	94.4
iii)	*Dendrocalamus hamiltonii*	301	524	37.7	414	77.7
iv)	*D. giganteus*	472	848	50.7	360	88.5
v)	*Oxytenanthera abyssinica*[2)]	450	831	33.6	377	112.0

[1)] average of bottom, middle and top portions of culms.

[2)] average of bottom and middle portions only.

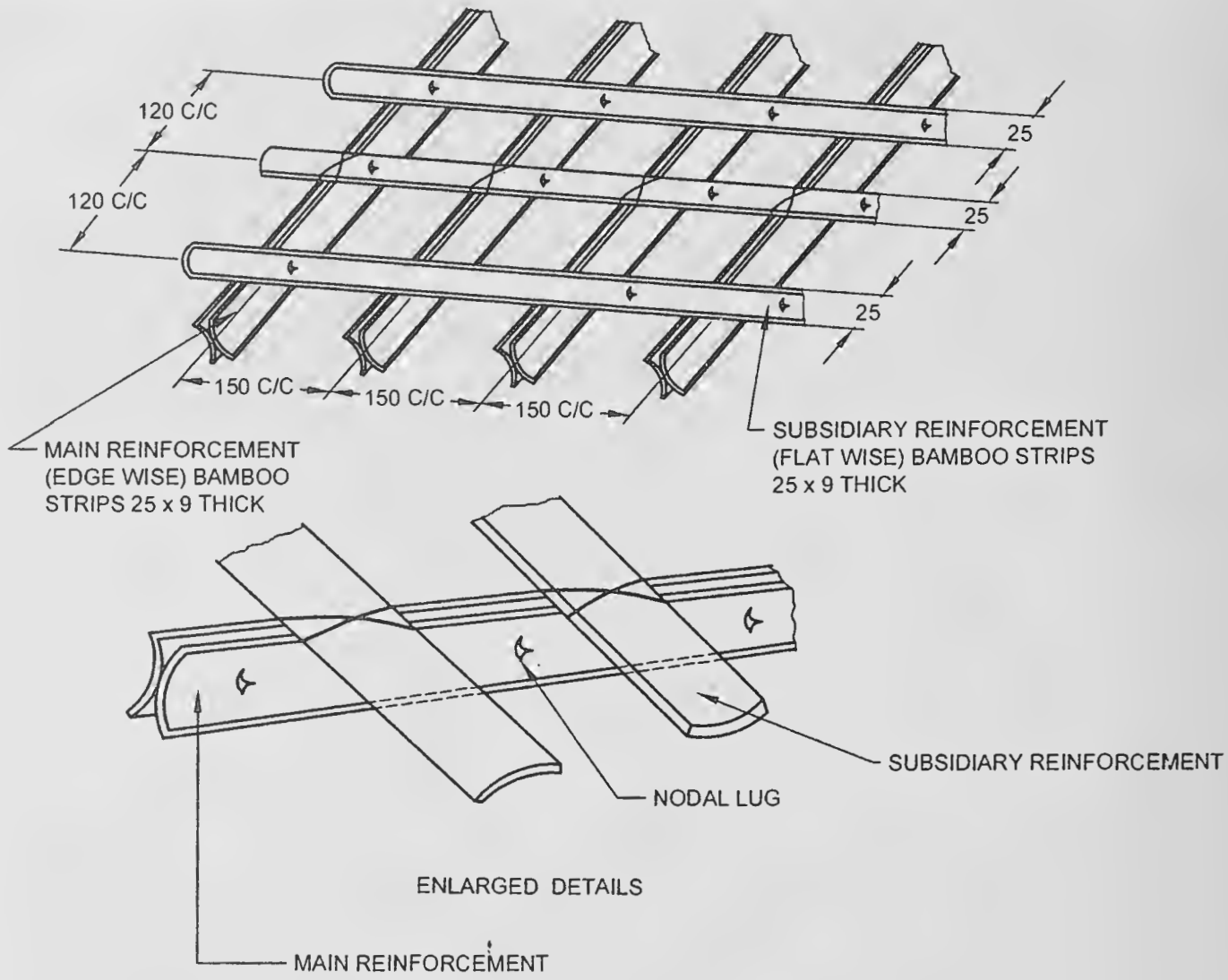

All dimensions in millimetres.

FIG. 10 GENERAL DETAILS OF BAMBOO REINFORCEMENT

composite, bamboo mat corrugated sheet, bamboo tiles, plastered bamboo reeds, thatch, corrugated galvanized iron sheeting, asphaltic sheets, plain clay tiles, etc. The respective materials shall conform to the following:

a) *Bamboo mat board* — These shall conform to the accepted standard [6-3B(7)].

b) *Bamboo mat veneer composite* — These shall conform to the accepted standard [6-3B(8)].

c) *Bamboo mat corrugated sheet and bamboo mat ridge cap* — These shall conform to the accepted standard [6-3B(9)].

d) *Bamboo-jute composite corrugated and semi-corrugated sheets* — These shall conform to the accepted standard [6-3B(10)].

9.1.2 *Reconstituted Wood from Destructured Bamboo*

After lopping, bamboos are cross-cut into small lengths in the round and then split along the axis. The small cross-section strips are then passed between the counter revolving rollers till the material is fully destructured. This is then air dried and resin treated and suitably pressed without much disturbing the natural alignment of fibres thus retaining the directional properties of bamboo.

Some typical strength properties of reconstituted wood from destructured bamboo are given in Table 7. The reconstituted product from bamboo can be sawn, nailed, moulded, bored, screwed, polished and painted. Thus it offers a good substitute of solid wood for structural uses.

NOTE — Reconstituted boards/wood from destructured bamboo when tested for physical and mechanical properties in accordance with the accepted standards [6-3B(11)] and [6-3B(12)] yielded encouraging results. Gist of mechanical properties of these boards is excellent when compared with *Dendrocalamus strictus* (bamboo), teak and sal.

9.1.3 *Other Panel Products/Infill Materials*

Other panel products/infill materials shall be in accordance with relevant Indian standards. These shall be such that they maintain their integrity and strength in the assigned service class throughout the expected life of the structure.

9.1.4 *Adhesives*

Adhesive shall maintain their integrity in accordance with the accepted standard [6-3B(13)].

9.2 Structural Usage of Bamboo Based Products

9.2.1 *General*

Bamboo mat board (BMB) and bamboo mat veneer

Table 7 Gist of Mechanical Properties of Reconstituted Wood from Bamboo (*Dendrocalamus Strictus*)

(*Clause* 9.1.2)

Sl No.	Board Material			Density	Modulus of Rupture	Tensile Strength Parallel to Grain	Compressive Strength Parallel to Grain	Izod Impact	Shear Strength	Modulus of Elasticity × 10^3	Screw Holding Power
	Set	Resin Contents	Pressure								
		Percent	kgf/cm²	g/cm³	kgf/cm²	kgf/cm²	kgf/cm²	kgf/cm	kgf/cm²	kgf/cm²	kgf
(1)	(2)	(3)	(4)	(5)	(6)	(7)	(8)	(9)	(10)	(11)	(12)
i)	I	6 to 29	56	0.99 to 1.25	1 769 to 2 255	1 049 to 2 024	1 057 to 1 596	343 to 281	202 to 364	278 to 308	398 to 508
				In the increasing order of resin percentage.							
ii)	II	9	21 to 28	0.62 to 0.93	1 062 to 1 615	6 99 to 1 210	675 to 1 030	186 to 202	128 to 247	155 to 232	361 to 486
	Wood/Bamboo										
iii)	*Shorea robusta* (at 12 percent dry moisture content)			0.749	1 249	—	685	124	110	152.8	369
iv)	*Tectona grandis* (at 12 percent dry moisture content)			0.596	959	—	532	68	102	119.6	326
v)	*Dendrocalamus strictus*			0.757	1 310	—	624	—	—	180.3	—

composite (BMVC) have high in-plane rigidity and hence high racking strength and are more flexible than equivalent plywood. This property of BMB and BMVC can be advantageously used in many engineering applications such as wall paneling, composite beams, composite floor deck and stress skinned panels. Bamboo mat corrugated sheet (BMCS) is water proof and resistant to decay, termites/insects and fire. These sheets may be used as roofing material. Precast bamboo reinforced cement concrete and reconstituted wood from destructured bamboo can also be used in structural applications.

9.2.2 *Bamboo Composites*

Along with bamboo, bamboo composites such as bamboo mat board, bamboo mat veneer composite, may also be successfully used in combination with timber for making efficient structural components like web because where high shear strength of bamboo mat board and bamboo mat veneer composite can be utilized as web and timber flanges for transmitting tensile and compressive stress. PF, PRF adhesives are commonly used for gluing web and flanges as shown in Fig. 11. Beams can be straight, single tapered, double tapered, haunched, as shown.

Bamboo mat board and bamboo mat veneer composite can also be used for roof and wall sheathing (shear walls) and diaphragms, gussets, arch panels, barrel vaults, etc. It can also be used as skin material in sandwich construction.

Permissible safe working stresses are given in Table 8.

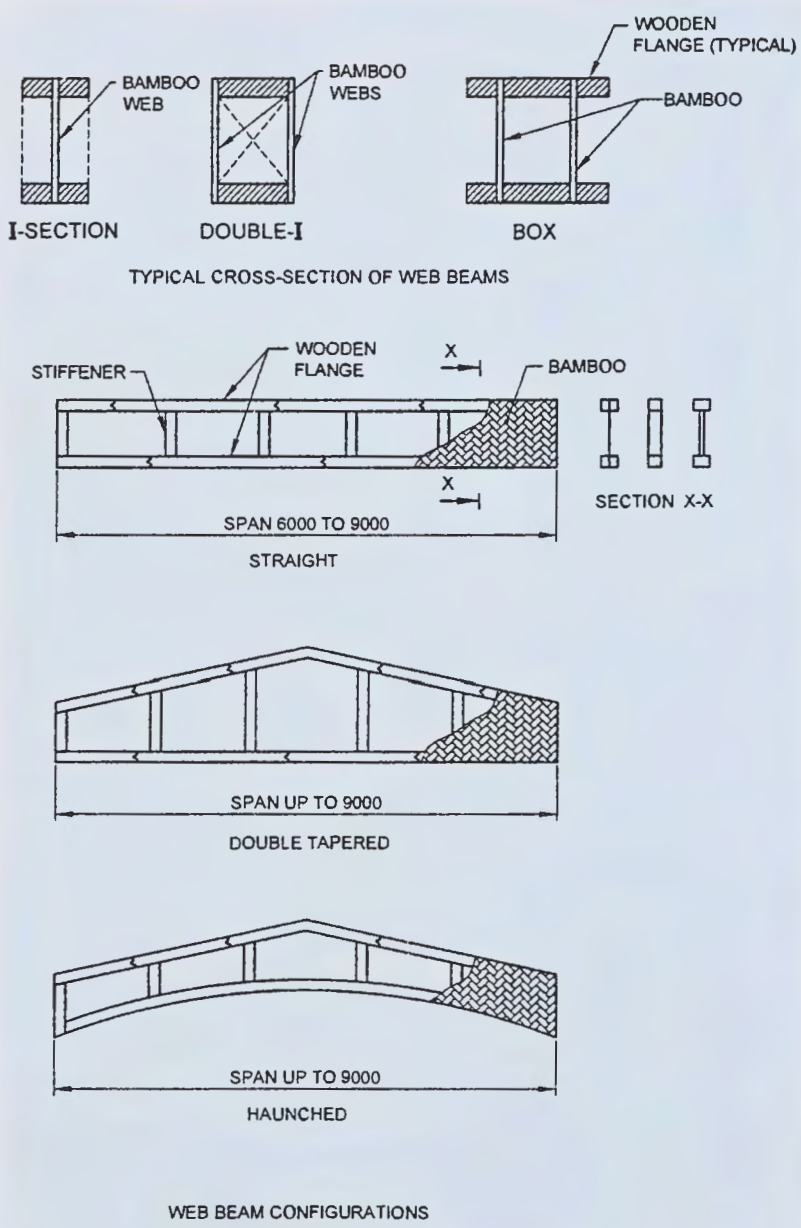

All dimension in millimetres.

FIG. 11 BAMBOO MAT BOARD WEB BEAMS

Table 8 Permissible Safe Working Stresses for Bamboo Mat Board and Bamboo Mat Veneer Composite

(*Clause* 9.2.2)

Sl No.	Properties	Bamboo Mat Board	Bamboo Mat Veneer Composite	
			Along	Across
		N/mm²	N/mm²	N/mm²
(1)	(2)	(3)	(4)	(5)
i)	Tensile strength	8.5	10	10
ii)	Compressive strength	10.80	13	6.5
iii)	Modulus of rupture	19.00	19	10.5
iv)	Modulus of elasticity	3 200	4 600	—
v)	Modulus of rigidity	4 970	1 930	—

9.2.3 *Precast Bamboo Reinforced Cement Concrete*

Precast bamboo reinforced cement concrete panels of dimensions 600 mm × 300 mm × 40 mm can serve for walling, when laid one above the other in a suitability located wall in low cost construction, etc. Bamboo strips 20 mm × 8 mm splits duly processed should be placed at 90 mm centre-to-centre both ways in form work and concreted.

9.2.4 *Wall Infill Panel*

The wall is considered non-load bearing although connected to the framing elements. It comprises a grid of split bamboo (19 mm × 9 mm) tied together with MS binding wire to form a 150 mm × 150 mm grid. The grid is tied to steel dowels passing through the columns. Chicken wire mesh is fixed on the outside face of the grid. Cement mortar (in the proportion 1 : 3) is applied to both sides of the grid to a finished thickness of about 50 mm. Fly ash can be utilized as part replacement of cement up to 35 percent by mass. This is similar to conventional ferrocement-type construction. The same principle is extended to the construction of gable walls. Alternatively, gable walls may be formed with bamboo mat board. Figure 12 shows the typical cross-section of the infill wall panel.

9.2.4.1 *Foundation detail*

The columns pierced by steel dowels at 150 mm centre-to-centre provide connection to the bamboo grid infill. Fix 8 mm diameter MS rod of 400 mm length at 100 mm from one end of the column which has undergone treatment. For anchoring, fix two more MS rods of same diameter at 100 mm centre-to-centre starting from the first hole (*see* Fig. 13). Pour the concrete by giving temporary support. Foundation is limited to individual footings of size 400 mm × 400 mm × 600 mm deep for each bamboo column placed at 1 200 mm apart and two coarse concrete blocks or stone or other locally available material for infill wall foundation.

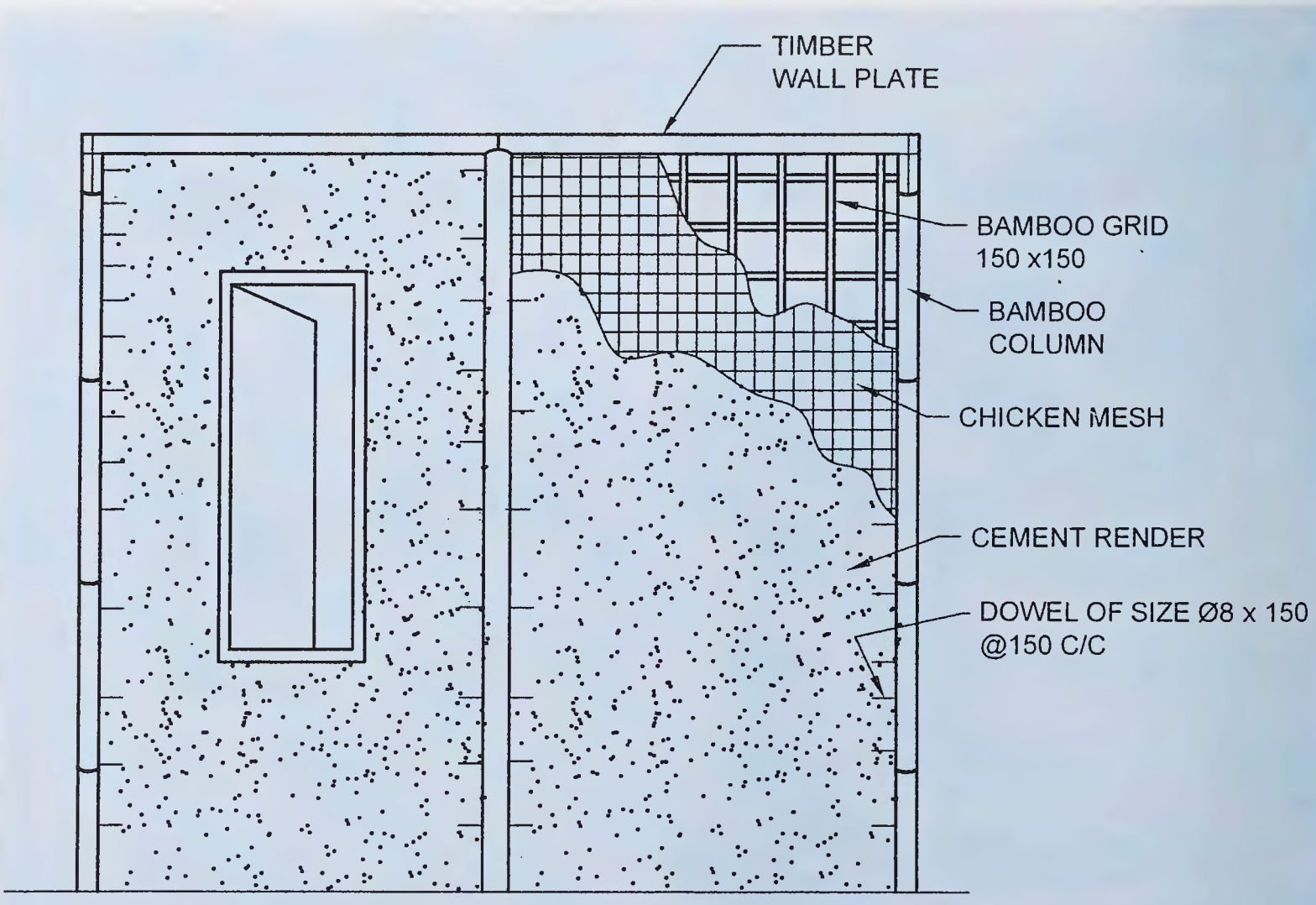

All dimensions in millimetres.

FIG. 12 BAMBOO STRUCTURAL WALLING SYSTEM

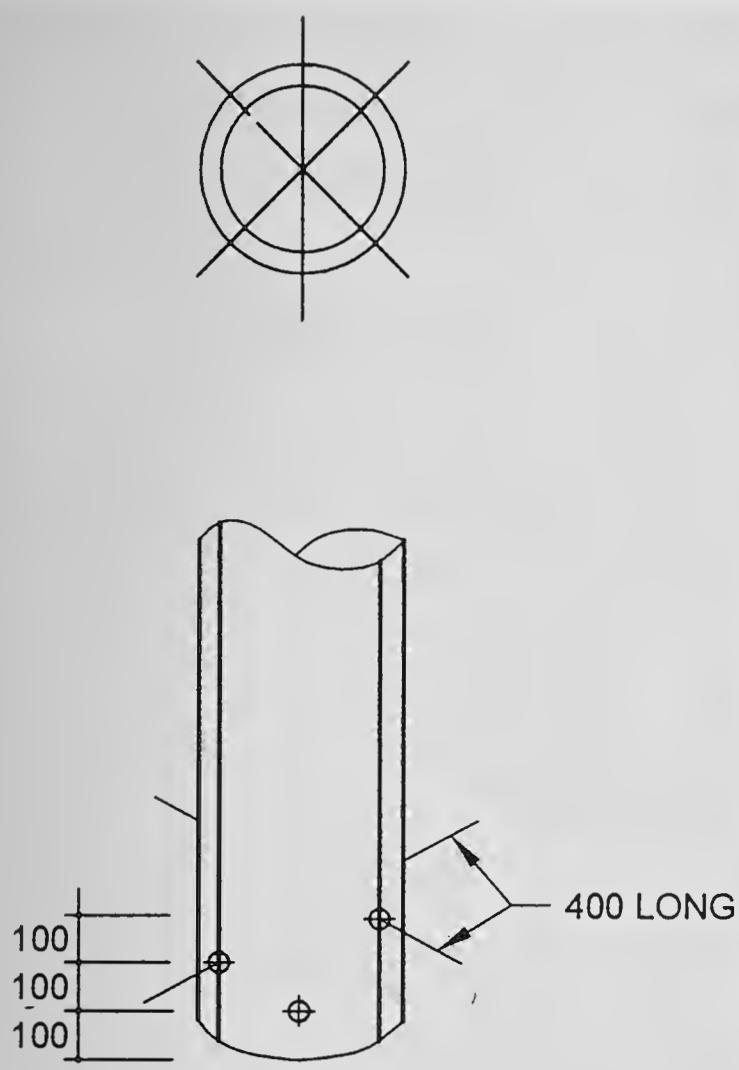

All dimensions in millimetres.

FIG. 13 DETAILS OF BOTTOM OF BAMBOO COLUMN FOR ANCHORING IN CONCRETE FOR FOUNDATION

9.2.5 *Bamboo Concrete Flooring Using Round Bamboo*

Technology of such a flooring (for situations needing raised flooring) is based on the method of rigidly fixing round bamboo, where 30 mm thick M 20 grade PCC (with 6 mm down coarse aggregate) is placed over 6 to 8 mm thick culm, that are arranged side by side to form bamboo flooring.

The rigid fixing is achieved by using shear connectors in the form of 1.5 mm dia. 20 mm long MS nails partially inserted into the bamboo flooring and balance length with the heads of the nails embedded in the PCC layer, holding the two components together. The sectional properties of the combination are calculated based on the concept of flitched beams for design (*see* Fig. 14).

9.2.6 *Bamboo Concrete Walling Using Flat Bamboo*

Loads on walls and roof do not generally justify use of round bamboo as such. So, flat or split bamboo is preferred for use in these cases. The flat bamboo works like a wire-net used conventionally to hold cement plaster in critical applications. Partial plastering is done during the first day ensuring entry of plastering material in the gaps of flat bamboo. This provides the base for cement plastering or PCC laying next day. About 5 mm gap is essential for entry of plastering

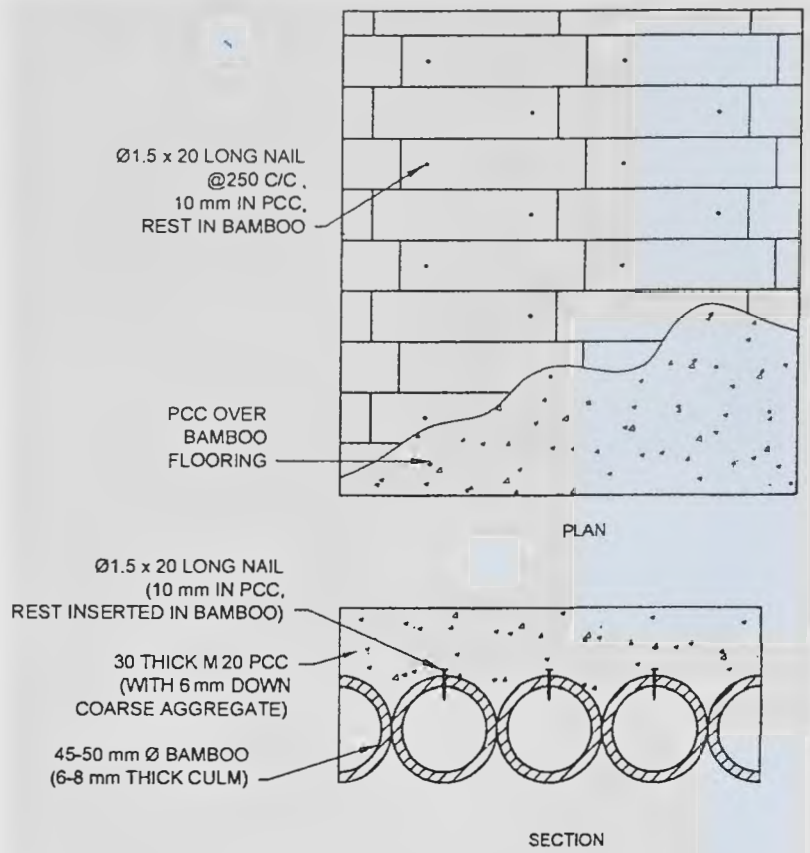

All dimensions in millimetres.

FIG. 14 DETAIL OF A TYPICAL BAMBOO CONCRETE FLOORING

material of sufficient sectional area to sustain shear force. The gaps are generated by inserting a small wedge of bamboo strip and pulling it out after a part of the gap is filled by plaster. Such gaps have to be discontinuous, to retain the character of a wire-net. About 25 percent width of the flat bamboo is assumed to be gaps, part of it is the organized gap of 5 mm width as described, at an interval of about 50 mm width, to sustain shear force and the balance gap remains to be natural to flat bamboo. Minimum thickness of the flat bamboo is assumed to be 6 mm. Bamboo with thicker wall would be stronger.

Expected strength (using *Bambusa balcooa*) may be considered as follows:

a) Walling of 6 mm bamboo with 18 mm thick cement sand plaster in 1:3 would be able to withstand wind pressure of 112 kgf/m^2 if used as wall, either supported continuously 1.5 m apart, or supported simply 1.25 m apart.

b) As a roof, the wind suction load would be partly compensated by the dead load of the roof. The imposed load of a mason sitting at the centre of span needs to be considered. This load can be accommodated by use of 18 mm M 20 PCC with 6 mm flat bamboo, supported 1.0 m apart; neatly finished.

The engineered houses for application of the above bamboo concrete walling are designed with stiffeners and diagonals in all the three planes, keeping the deformation of walls along plane of walls almost nil and deflection of columns across the plane of wall at a minimum.

ANNEX A

(*Foreword*)

SOURCE AND LOCAL NAMES OF SOME OF THE SPECIES OF BAMBOO

Sl No. (1)	Species (2)	Source/Local Names (3)
i)	*Bambusa auriculata*	Assam, Bangladesh, Myanmar; introduced in Calcutta Botanical Garden (now Acharya Jagadish Chandra Bose Indian Botanic Garden).
ii)	*B. balcooa*	Asm — Baluka; Ben — Balku bans; Duars — Bora bans; Garo — Wamnah, beru; Tripura — Barak.
iii)	*B. bambos (Syn.B.arundinacea)*	Asm — Kotoba; Ben — Baroowa, behor, ketuas, ketwa; Manip — Saneibi; Mah — Katang bamboo, oowga; Oriya — Daba, katuig; Tel — Mulkas veduru, Mullu vedurn; English — Spiny bamboo.
iv)	*B. burmanica*	Asm — Thaikawa.
v)	*B. multiplex Syn. B. glancescens (Syn. B. nana)*	Sans — keu-fa; Burmese — Pa-lau-pinan-wa; Malay — Bamboo tjeenah; China — Bamboo hower tjeenah.
vi)	*B. nutans*	Asm — Deobans, jotia-makal; Asm — Bidhuli, mukial; Ben — Makia; Bhutia — Jiu; Hin — Malabans; Kangra — Nal; Khasi — Seringjai; Kuki — Wa malang; Lepcha — Malubans, mahlu, mallo; Oriya — Badia bansa; Sylhet (Bangladesh) — Peechli; Tripura — Kali.
vii)	*B. pallida*	Asm — Bijli, jowa, makal, walkthai; Cachar — Bakhal, burwal; Khasi — Seskien, skhen, ineng, usker; Lepcha — Pashipo, pshi, pushee; Mikir — Loto; Naga — Tesero, watoi; Tripura — Makal.

(1)	(2)	(3)
viii)	*B. polymorpha*	Asm — Jama betwa, betwa; Ben — Batua, jaibarouwa, jama; Burma — Kyathaung-wa; MP-Korku — Narangi bhas; Tripura — Basi.
ix)	*B. tulda*	Asm — Wamunna, wagi, nal-bans; Ben — Tulda, jowa; Duars — Karanti, matela; Garo — Watti; Hin — Peka; Kamrup — Bijuli, jati, joo, ghora; Tripura — Mirtinga.
x)	*B. vulgaris*	Ben and Manip — Bakal; Oriya — Sunarkania bans.
xi)	*B. Wamin Syn. B.ventricosa (Syn. B. Vulgaris var. Wamin)*	Common name — Pitcher bamboo.
xii)	*Cephalostachyum pergracile*	MP — Bhalan bans; Manip — Wootang; Naga — Latang; Oriya — Darrgi.
xiii)	*Dendrocalamus giganteous*	English — Giant Bamboo; Asm — Worra; Manip — Maroobeb.
xiv)	*D. hamiltonii*	Nep — Tamo; Asm — Kokwa; Tripura — Pecha.
xv)	*D. longispathus*	Tripura — Rupai.
xvi)	*D. membranaceus*	Native of Myanmar; introduced in Kerala.
xvii)	*D. strictus*	English — Male bamboo; Ben — Karaíl; Guj — Nakur bans; Kan — Kiri bidiru; Mah — Male bamboo, nanvel; Oriya — Salia; Tam — Kalmungil; Tel — Sadanapa vedur; Tripura — Lathi bans; Hin — Bans kaban, Nav bans;
xviii)	*Melocanna baccifera*	Asm — Tarai; Ben — Muli; Cachar — Wati; Garo — Watrai; Manip — Moubi; Mikir — Artem; Naga — Turiah.
xix)	*Oxytenanthera abyssinicia*	Native of tropical Africa; cultivated at FRI, Dehradun.

(1)	(2)	(3)
xx)	*Thyrsostachys oliveri*	Native of Myanmar; Planted in Haldwani (Uttaranchal), Arunachal Pradesh, Kerala and Tamilnadu.

NOTES

1 The following abbreviations have been used in the above table:

Asm	Assam
Ben	Bengali
Guj	Gujarati
Hin	Hindi
Kan	Kannada
Mah	Maharashtra
Manip	Manipur
MP	Madhya Pradesh
Nep	Nepali
Sans	Sanskrit
Tam	Tamil
Tel	Telugu

2 The above table does not provide an exhaustive list. It only attempts to enlist some of the information readily available in regard to species of bamboo from India and some of the neighbouring countries, and some connected information.

ANNEX B

(*Foreword*)

RECOMMENDATIONS FOR BAMBOO STRUCTURES IN HIGH WIND/ CYCLONE PRONE AREAS

B-1 Given below are some recommendations for bamboo structures in high wind/cyclone prone areas, which are based on Rapid Visual Screening (RVS) of the damages of past events:

a) Prefer a square plan of the building symmetrical to the arrangement of partitions and openings for balanced distribution of forces within the structure. Window positioning be planned in such a way that wind entering through window could pass through similar opening on opposite wall in order to reduce built-up pressure, and incorporate ridge vents.

b) A hip-shaped, pyramidal or a conical roofing be preferred to gable end or mono-pitch ones for least wind resistance.

c) Wide mono-pitched *Verandas* abutting the entrance to residence should be structurally separated from the main building.

d) Roof overhangs be limited to 450 mm as they contribute to higher negative suction. Large overhangs should be properly tied back to wall frame-work.

e) Roof structure shall be properly secured with vertical load-bearing members (wooden or bamboo columns, brick piers or walling) for eliminating the chances of being blown away from the building. A continuous beam connecting all the columns would increase the framing action.

f) Roof cladding (G. I. sheets, clay tiles or thatch) be properly connected with holding down U-bolts, or sturdy anchorages to ensure safety. Thatch roof be tied by nylon ropes in diagonal pattern.

g) Sufficient depth for anchorage be provided; columns be embedded in pits within the foundation and secured by poured concrete. Wetting of column base be checked by raising it from the floor level.

h) Highest importance be given to strengthening the junctions between structural elements at

different levels, that is, foundation, eaves and roof. Walls be linked together suitably by a continued collar beam at floor, sill, lintel and roof level.

j) Fastening any two mutually perpendicular load bearing members should be done in accordance with good practice of spacing the connecting bolts with reference to loads direction and the centre of stiffness. This will increase the moment-resisting capacity of the joint and prevent hinge formation. A minimum of two bolts be provided to prevent rotation of members at a joint.

LIST OF STANDARDS

The following list records those standards which are acceptable as 'good practice' and 'accepted standards' in the fulfillment of the requirements of this Code. The latest version of the standard shall be adopted at the time of enforcement of the Code. The standards listed may be used by the Authority for conformance with the requirements of the referred clauses in the Code.

In the following list, the number appearing in the first column within parantheses indicates the number of the reference in this Subsection.

	IS No.	*Title*
(1)	9096 : 2006	Code of practice for preservation of bamboo for structural purposes (*first revision*)
(2)	6874 : 2008	Method of tests for bamboo (*first revision*)
(3)	1902 : 2006	Code of practice for preservation of bamboo and cane for non-structural purposes (*second revision*)
(4)	8242 : 1976	Method of tests for split bamboo
(5)	2366 : 1983	Code of practice for nail-jointed timber construction (*first revision*)
(6)	4924	Method of test for nail-jointed timber trusses
	(Part 1) : 1968	Destructive test
	(Part 2) : 1968	Proof test
(7)	13958 : 1994	Specification for bamboo mat board for general purposes
(8)	14588 : 1999	Specification for bamboo mat veneer composite for general purposes
(9)	15476 : 2004	Specification for bamboo mat corrugated sheets
(10)	15972 : 2012	Specification for bamboo-jute composite corrugated and semi-corrugated sheets
(11)	1734 (Parts 1 to 20) : 1983	Methods of test for plywood (*second revision*)
(12)	1708 (Parts 1 to 18) : 1986	Methods of testing of small clear specimens of timber (*second revision*)
(13)	848 : 2006	Specification for synthetic resin adhesives for plywood (phenolic and aminoplastic) (*second revision*)

NATIONAL BUILDING CODE OF INDIA

PART 6 STRUCTURAL DESIGN

Section 4 Masonry

BUREAU OF INDIAN STANDARDS

CONTENTS

FOREWORD ... 3

1 SCOPE ... 5

2 TERMINOLOGY ... 5

3 MATERIALS ... 7

4 DESIGN CONSIDERATIONS ... 9

5 STRUCTURAL DESIGN ... 18

6 GENERAL REQUIREMENTS ... 22

7 REINFORCED BRICK AND REINFORCED BRICK CONCRETE FLOORS AND ROOFS ... 23

8 SPECIAL CONSIDERATION FROM EARTHQUAKE POINT OF VIEW ... 23

9 GUIDELINES FOR IMPROVING EARTHQUAKE RESISTANCE OF LOW STRENGTH MASONRY BUILDINGS ... 48

10 REINFORCED MASONRY ... 54

11 MASONRY WALLS USING RAT-TRAP BOND TECHNOLOGY ... 62

12 NOTATIONS AND SYMBOLS ... 62

ANNEX A SOME GUIDELINES FOR ASSESSMENT OF ECCENTRICITY OF LOADING ON WALLS ... 63

ANNEX B CALCULATION OF BASIC COMPRESSIVE STRESS OF MASONRY BY PRISM TEST ... 63

ANNEX C GUIDELINES FOR DESIGN OF MASONRY SUBJECTED TO CONCENTRATED LOADS ... 64

ANNEX D GUIDELINES FOR APPROXIMATE DESIGN OF NON-LOAD BEARING WALL ... 65

ANNEX E CONFINED MASONRY BUILDING CONSTRUCTION ... 66

ANNEX F TYPICAL ITERATIVE METHOD FOR WALLS SUBJECTED TO FLEXURE AND AXIAL LOAD ... 72

ANNEX G DISTRIBUTION OF LATERAL FORCES IN THE PIERS OF A MASONRY WALL ... 75

ANNEX H MASONRY WALLS USING RAT-TRAP BOND ... 78

ANNEX J NOTATIONS, SYMBOLS AND ABBREVIATIONS ... 83

LIST OF STANDARDS ... 83

FOREWORD

This Code (Part 6/Section 4) covers the structural design of unreinforced and reinforced masonry elements in buildings. Provisions on reinforced brick and reinforced brick concrete floors and roofs have also been dealt with.

This Section was first published in 1970 and subsequently revised in 1983. The first revision of this Section was modified in 1987 through Amendment No. 2 to bring this Section in line with the latest revised masonry code. In the amendment, certain provisions were updated following the revision of IS 1905 'Code of practice for structural use of unreinforced masonry' on which the earlier version was based. In the amendment, requirements of masonry element for stability were modified; in the design of free standing wall, provisions were made for taking advantage of the tensile resistance in masonry under certain conditions; provision regarding effective height of masonry wall between openings was modified; method of working out effective height of wall with a membrane type DPC was modified; the criteria for working out effective length of wall having openings was modified; some general guidelines for dealing with concentrated loads for design of walls were included; and provision of cutting and chases in walls were amplified. The Section was thereafter revised in 2005.

In the second revision of this Section in 2005, the provisions of special considerations in earthquake zones were aligned in line with the revised Indian Standard, IS 4326 : 1993 'Code of practice for earthquake resistant design and construction of buildings'; a new clause covering guidelines for improving earthquake resistance of low strength masonry buildings was added; and reference to design of reinforced brick and reinforced brick concrete floors and roofs was included.

As a result of experience gained in the implementation of this Section and feedback received, as well as in view of revision of IS 4326, a need to revise this Section was again felt. This Section has, therefore, been revised to incorporate the following significant changes:

a) Detailed provisions relating to reinforced masonry have been included.
b) The provisions of special considerations in earthquake zones have been updated including by incorporation of suitable provisions relating to 'Confined masonry building construction'.
c) A separate table on compressive strength for different grades of mortar has been included for clarity.
d) Mix proportions and strength of mortars for masonry have been updated to be based on proportioning by mass (instead of by volume) to reflect sound engineering practices; and 28 day strength values of cement-sand mortar with cement having compressive strength of 43 MPa and above.
e) Provisions related to durability criteria for selection of masonry mortars have been included.
f) Use of one and a half brick thick wall up to ground level from foundation level has been suggested to reduce the slenderness ratio of the wall above it for ground floor walls.
g) Stabilized soil blocks have been included as masonry unit.
h) Number of storeys of masonry construction has been limited to 4, in line with the seismic design standards.
j) Masonry wall construction using rat-trap bond has been included.
k) Reference to all the concerned Indian Standards has been updated.

Structural design requirements of this section are largely based on following Indian Standards:

a) IS 1905:1987 'Code of practice for structural use of unreinforced masonry (*third revision*)',
b) IS 4326:2013 'Earthquake resistant design and construction of buildings — Code of practice (*third revision*)
c) IS 10440:1983 Code of practice for construction of RB and RBC floors and roofs, and
d) IS 13828:1993 'Improving earthquake resistance of low strength masonry buildings — Guidelines'.

Until further research material is available on rat-trap bond masonry, its usage is proposed to be limited up to two storeys.

A reference to SP 20 : 1991 'Handbook on masonry design and construction (*first revision*)', may be useful. In the formulation of this Section, inputs were also derived from the IITK-GSDMA's publication, 'Guidelines for structural use of reinforced masonry'.

All standards, whether given herein above or cross-referred to in the main text of this section, are subject to revision. The parties to agreement based on this section are encouraged to investigate the possibility of applying the most recent editions of the standards.

For the purpose of deciding whether a particular requirement of this Section is complied with, the final value, observed or calculated, expressing the result of a test or analysis, shall be rounded off in accordance with IS 2 : 1960 'Rules for rounding off numerical values (*revised*)'. The number of significant places retained in the rounded off value should be the same as that of the specified value in this Section.

NATIONAL BUILDING CODE OF INDIA

PART 6 STRUCTURAL DESIGN

Section 4 Masonry

1 SCOPE

1.1 This Code (Part 6/Section 4) covers the structural design aspects of unreinforced load bearing and non-load bearing walls, constructed with masonry units permitted in accordance with this section.

1.2 This Section also deals with the selection of materials, special features of design and construction for masonry construction using rectangular masonry units. It also covers guidelines regarding earthquake resistant buildings constructed using masonry of low strength.

1.3 This Section also covers provisions for design of reinforced brick and reinforced brick concrete floors and roofs.

1.4 This Section also gives the recommendations for structural design aspects of reinforced load bearing and non-load bearing walls, constructed with different types of bricks and blocks.

1.5 The recommendations of the Section do not apply to walls constructed in mud mortars.

2 TERMINOLOGY

For the purpose of this Section, the definitions given below shall apply.

2.1 Bed Block — A block bedded on a wall, column or pier to disperse a concentrated load on a masonry element.

2.2 Bond — Arrangement of masonry units in successive courses to tie the masonry together both longitudinally and transversely; the arrangement is usually worked out to ensure that no vertical joint of one course is exactly over the one in the next course above or below it, and there is maximum possible amount of lap.

2.3 Column, Pier and Buttress

a) *Column* — An isolated vertical load bearing member, width of which does not exceed four times the thickness.

b) *Pier* — A thickened section forming integral part of a wall placed at intervals along the wall, to increase the stiffness of the wall or to carry a vertical concentrated load. Thickness of a pier is the overall thickness including the thickness of the wall or, when bonded into a leaf of a cavity wall, the thickness obtained by treating that leaf as an independent wall (*see* Fig. 1)

c) *Buttress* — A pier of masonry built as an integral part of wall and projecting from either or both surfaces, decreasing in cross-sectional area from base to top.

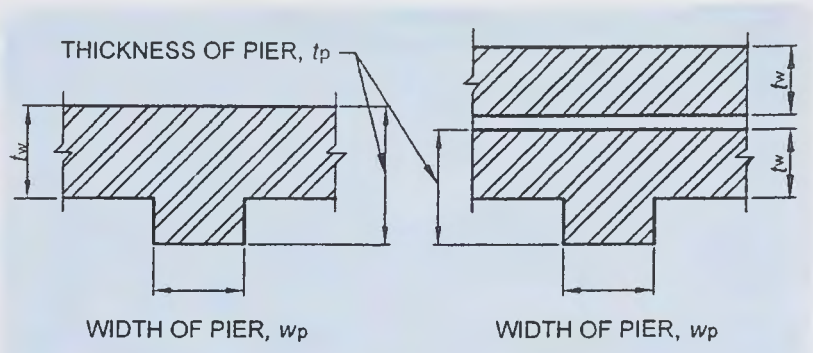

FIG. 1 DEFINITION OF PIER

2.4 Cross-Sectional Area of Masonry Unit — Net cross-sectional area of a masonry unit shall be taken as the gross cross-sectional area minus the area of cellular space. Gross cross-sectional area of cored units shall be determined to the outside of the coring but cross-sectional area of grooves shall not be deducted from the gross cross-sectional area to obtain the net cross-sectional area.

2.5 Curtain Wall — A non-load bearing wall subject to lateral loads. It may be laterally supported by vertical or horizontal structural members, where necessary (*see* Fig. 2).

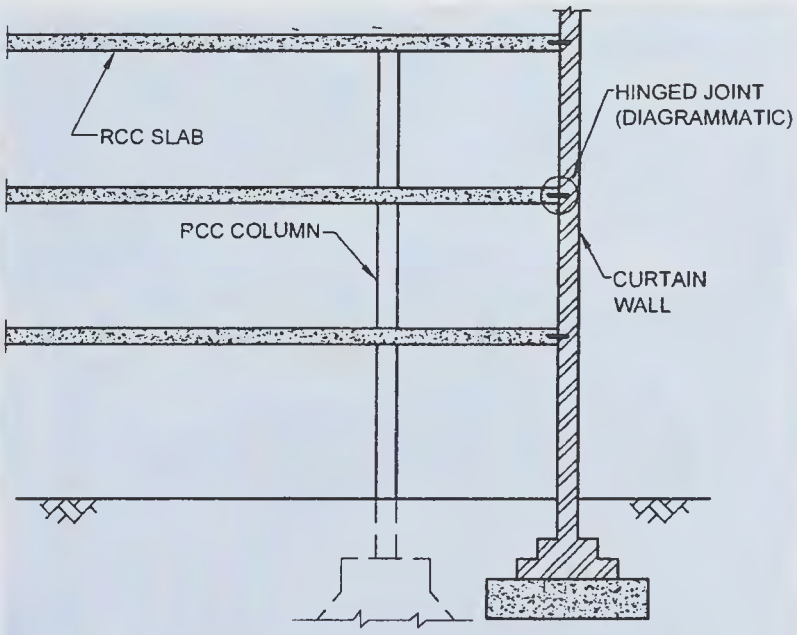

NOTE — The figure is only illustrative to explain about the term curtain wall and is not intended to be an exhaustive provision.

FIG. 2 TYPICAL MASONRY CURTAIN WALL

2.6 Effective Height — The height of a wall or column, to be considered for calculating slenderness ratio.

2.7 Effective Length — The length of a wall to be considered for calculating slenderness ratio.

2.8 Effective Thickness — The thickness of a wall or column to be considered for calculating slenderness ratio.

2.9 Hollow Unit — A masonry unit of which net cross-sectional area in any plane parallel to the bearing surface is less than 75 percent of its gross cross-sectional area measured in the same plane.

2.10 Grout — Mortar of pourable consistency.

2.11 Joint — A junction of masonry units, which can be classified as:

a) *Bed joint* — A horizontal mortar joint upon which masonry units are laid.

b) *Cross joint* — A vertical joint, normal to the face of the wall.

c) *Wall joint* — A vertical joint parallel to the face of the wall.

2.12 Leaf — Inner or outer section of a cavity wall.

2.13 Lateral Support — A support which enables a masonry element to resist lateral load and/or restrains lateral deflection of a masonry element at the point of support.

2.14 Load Bearing Wall — A wall designed to carry an imposed vertical load in addition to its own weight, together with any lateral load.

2.15 Masonry — An assemblage of masonry units properly bonded together with mortar.

2.16 Masonry Unit — Individual units which are bonded together with the help of mortar to form a masonry element such as wall, column, pier, buttress, etc.

2.17 Partition Wall — An interior non-load bearing wall, one storey or part storey in height.

2.18 Panel Wall — An exterior non-load bearing wall in framed construction, wholly supported at each storey but subjected to lateral loads.

2.19 Shear Wall — A wall designed to carry horizontal forces acting in its plane with or without vertical imposed loads.

2.20 Slenderness Ratio — Ratio of effective height or effective length to effective thickness of a masonry element.

2.21 Types of Walls

a) *Cavity wall* — A wall comprising two leaves, each leaf being built of masonry units and separated by a cavity and tied together with metal ties or bonding units to ensure that the two leaves act as one structural unit, the space between the leaves being either left as continuous cavity or filled with a non-load bearing insulating and water-proofing material.

b) *Faced wall* — A wall in which facing and backing of two different materials are bonded together to ensure common action under load (*see* Fig. 3).

NOTE — To ensure monolithic action in faced walls, shear strength between the facing and the backing shall be provided by toothing, bonding or other means.

c) *Veneered wall* — A wall in which the facing is attached to the backing but not so bonded as to result in a common action under load.

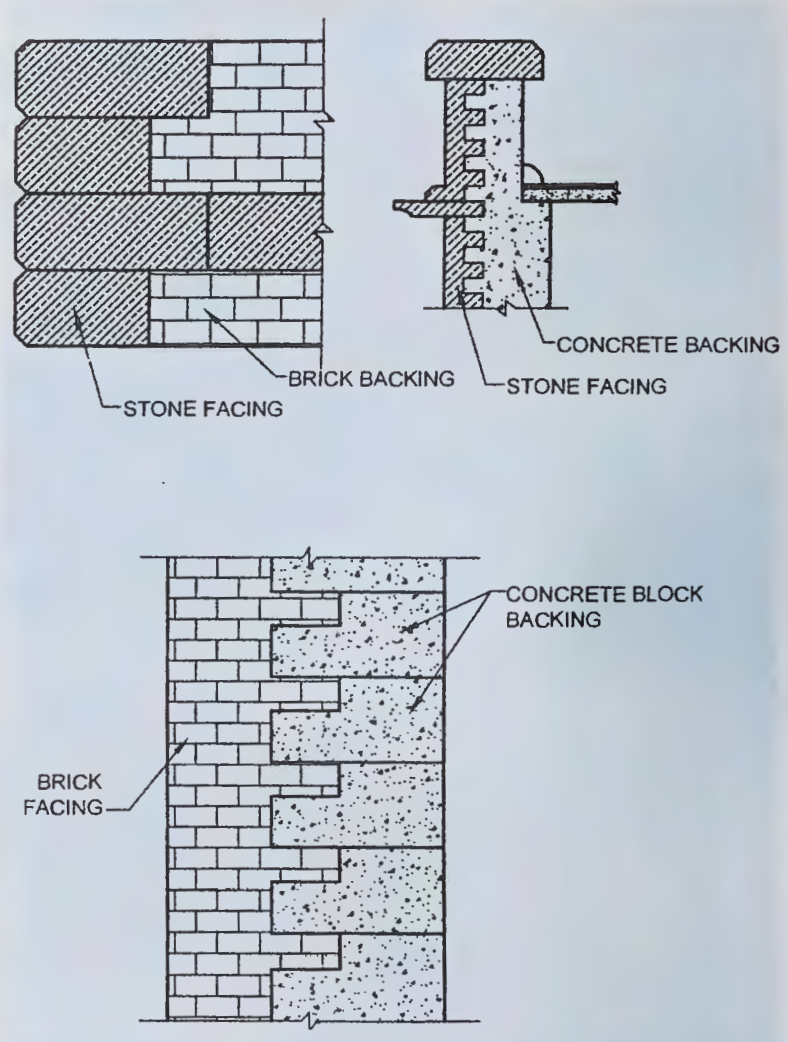

FIG. 3 TYPICAL FACED WALL

2.22 Reinforced Brick Slab (RB Slab) — Reinforced brick slab is particularly same as reinforced concrete slab in all its essential features except that brickwork is substituted partly for cement concrete. *See* Fig. 4A for details.

2.23 Reinforced Brick Concrete Slab (RBC Slab) — These are reinforced brick slab using concrete in the joints and on the top of bricks. *See* Fig. 4B for details.

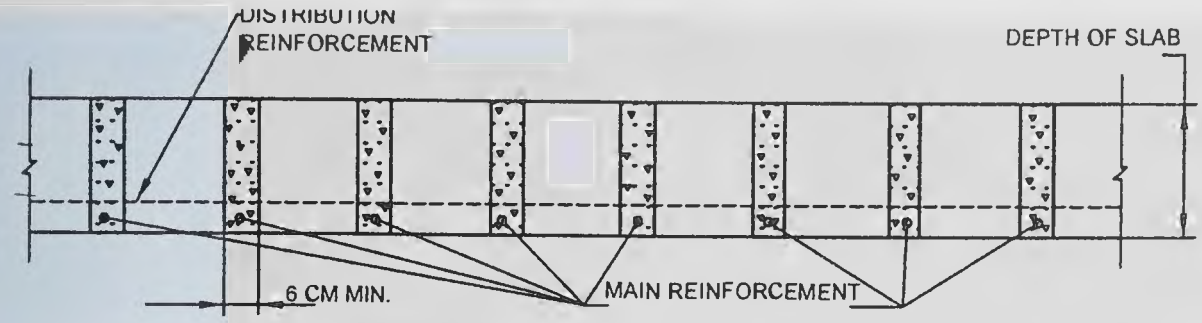

4A CROSS-SECTION OF RB SLAB

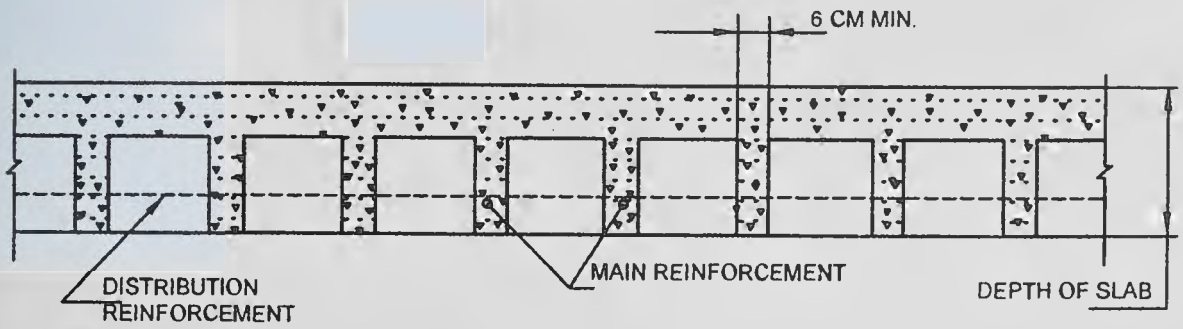

4B CROSS-SECTION OF RBC SLAB

FIG. 4 CROSS-SECTIONS OF RB AND RBC SLABS

3 MATERIALS

3.1 General

The materials used in masonry construction shall be in accordance with Part 5 'Building Materials' of the Code. Storage of materials shall be in accordance with good practice [6-4(1)].

3.2 Masonry Units

Masonry units used in construction shall conform to accepted standards [6-4(2)].

3.2.1 Masonry units may be of the following types:

a) Common burnt clay building bricks,
b) Burnt clay fly ash building bricks,
c) Pulverized fuel ash lime bricks,
d) Stones (in regular sized units),
e) Sand-lime bricks,
f) Concrete blocks (solid and hollow),
g) Lime based blocks,
h) Burnt clay hollow blocks,
j) Gypsum partition blocks,
k) Autoclaved cellular concrete blocks,
m) Stabilized soil blocks, and
n) Concrete stone masonry blocks.

NOTES

1 Gypsum partition blocks are used only for construction of non-load bearing partition walls.

2 Use of other masonry units such as precast stone blocks, fly-ash-lime-gypsum bricks, stabilized soil blocks and other bricks/ blocks not covered by the above specifications may also be permitted based on test results.

3.2.2 Masonry units that have been previously used shall not be reused in brickwork or blockwork construction, unless they have been thoroughly cleaned and conform to this Section for similar new masonry units.

3.3 Mortar

Mortar for masonry shall conform to good practice [6-4(3)].

3.3.1 Minimum compressive strength for different grades of mortar on the basis of mix proportions as per **3.3.2** are given in Table 1.

Table 1 Compressive Strength for Different Grades of Mortar

(*Clause* 3.3.1)

Sl No.	Grade of Mortar	Minimum Compressive Strength at 28 Days N/mm^2
(1)	(2)	(3)
i)	H1	10
ii)	H2	6.0
iii)	M1	5.0
iv)	M2	3.0
v)	M3	1.5
vi)	L1	0.7
vii)	L2	0.5

3.3.2 Mix proportions and compressive strengths of some of the commonly used mortars are given in Table 2.

3.4 Durability Criteria for Selection of Masonry Mortars

3.4.1 The selection of masonry mortars from durability considerations shall cover both the loading and exposure conditions of the masonry. The requirements for masonry mortar shall generally be as given in **3.4.2** to **3.4.6** (*see also* Table 1).

Table 2 Mix Proportions and Strength of Mortars for Masonry

(*Clause* 3.3.2)

Sl No.	Mix Proportions (By Mass)					Minimum Compressive Strength at 28 Days in N/mm² (with Cement Compressive Strength at 28 Days, in N/mm², Between 33 and 43)	Minimum Compressive Strength of Cement : Sand Mortar at 28 Days in N/mm² (with Cement Compressive Strength at 28 Days, in N/mm² ≥ 43)
	Cement	Lime	Lime - Pozzolana Mixture	Pozzolana	Sand		
(1)	(2)	(3)	(4)	(5)	(6)	(7)	(8)
1	1	¼ C or B	0	0	3	10	—
2(a)	1	½ C or B	0	0	4	7.5	—
2(b)	1	½ C or B	0	0	4 ½	6	—
2(c)	1	0	0	0	4	6	7
3(a)	1	0	0	0	5	5	6
3(b)	1	1 C or B	0	0	6	3	—
3(c)	0	0	1(LP-40)	0	1 ½	3	—
4(a)	1	0	0	0	6	3	4
4(b)	1	2B	0	0	9	2	—
4(c)	0	1A	0	0	2	2	—
4(d)	0	1B	0	1	1	2	—
4(e)	0	1 C or B	0	2	0	2	—
4(f)	0	0	1(LP-40)	0	1 ¾	2	—
5(a)	1	0	0	0	7	2	3
5(b)	1	3B	0	0	12	1.5	—
5(c)	0	1A	0	0	3	1.5	—
5(d)	0	1B	0	2	1	1.5	—
5(e)	0	1 C or B	0	3	0	1.5	—
5(f)	0	0	1(LP-40)	0	2	1.5	—
6(a)	1	0	0	0	8	1	2
6(b)	0	1B	0	1	2	0.7	—
6(c)	0	1 C or B	0	2	1	0.7	—
6(d)	0	0	1(LP-40)	0	2 ¼	0.7	—
6(e)	0	0	1(LP-20)	0	1 ½	0.7	—
7(a)	0	1B	0	0	3	0.5	—
7(b)	0	1 C or B	0	1	2	0.5	—
7(c)	0	0	1(LP-7)	0	1 ½	0.5	—

NOTES

1 Sand for making mortar should be well graded. In case sand is not well graded, its proportions shall be reduced in order to achieve the minimum specified strength.

2 For mixes in Sl No. 1 and Sl No. 2, use of lime is not essential from consideration of strength as it does not result in increase in strength. However, its use is highly recommended since if improves workability.

3 For mixes in Sl No. 3(a), 4(a), 5(a) and 6(a) either lime C or B to the extent of ¼ part of cement (by mass) or some plasticizer should be added for improving workability.

4 For mixes in Sl No. 4(b) and 5(b), lime and sand should first be ground in mortar mill and then cement added to coarse stuff.

5 It is essential that mixes in Sl No. 4(c), 4(d), 5(d), 5(e), 6(b), 6(c), 7(a) and 7(b) are prepared by grinding in a mortar mill.

6 A, B and C denote eminently hydraulic lime, semi-hydraulic lime and fat lime respectively, as specified in appropriate standards listed in Part 5 'Building Materials' of the Code.

3.4.2 In the case of masonry exposed frequently to rains and where there is further protection by way of plastering or rendering or other finishes, the grade of mortar shall not be less than M3 but shall preferably be of grade M2. Where no protection is provided, the grade of mortar for external walls shall not be less than M2.

3.4.3 In the case of load bearing internal walls, the grade of mortar shall preferably be M3 or more for high durability but in no case less than L1.

3.4.4 In the case of masonry in foundations laid below damp-proof course, the grades of mortar for use in masonry shall be as specified below:

a) Where soil has little moisture, masonry mortar of grade not less M3 shall be used.

b) Where soil is very damp, masonry mortar of grade preferably M2 or more shall be used. But in no case shall the grade of mortar be less than L1 and M3; and

c) Where soil is saturated with water, masonry mortar of grade M1 shall be used but in no case shall the grade of mortar be less than M2.

3.4.5 For masonry in buildings subject to vibration of machinery, the grade of mortar shall not be less than M1.

3.4.6 For parapets, where the height is greater than three times the thickness, the grade of masonry mortar used shall not be less than M1. In the case of low parapets, the grade of mortar shall be the same as that used in the wall masonry below.

3.4.7 The grade of mortar for bedding joints in masonry with large concrete blocks shall not be less than M1.

NOTE — For earthquake design consideration, recommended mortar mixes shall be as per Table 14.

4 DESIGN CONSIDERATIONS

4.1 General

Masonry structures gain stability from the support offered by cross walls, floors, roof and other elements such as piers and buttresses. Load bearing walls are structurally more efficient when the load is uniformly distributed and the structure is so planned that eccentricity of loading on the members is as small as possible. Avoidance of eccentric loading by providing adequate bearing of floor/roof on the walls providing adequate stiffness in slabs and avoiding fixity at the supports, etc, is especially important in load bearing walls in multistorey structures. These matters should receive careful consideration during the planning stage of masonry structures.

4.2 Lateral Supports and Stability

4.2.1 *Lateral Supports*

Lateral supports for a masonry element such as load bearing wall or column are intended,

a) to limit slenderness of a masonry element so as to prevent or reduce possibility of buckling of the member due to vertical loads; and

b) to resist horizontal components of forces so as to ensure stability of a structure against overturning.

4.2.1.1 Lateral support may be in the vertical or horizontal direction, the former consisting of floor/roof bearing on the wall or properly anchored to the same and latter consisting of cross walls, piers or buttresses.

4.2.1.2 Requirements of **4.2.1**(a) from consideration of slenderness may be deemed to have been met with, if

a) in case of a wall, where slenderness ratio is based on effective height, any of the following constructions are provided:

1) RCC floor/roof slab (or beams and slab) irrespective of the direction of span, bears on the supported wall as well as cross walls, to the extent of at least 90 mm;

2) RCC floor/roof slab not bearing on the supported wall or cross wall is anchored to it with non-corrodible metal ties of 600 mm length and of section not less than 6 mm × 30 mm, and at intervals not exceeding 2 m, as shown in Fig. 5; and

3) Timber floor/roof, anchored by non-corrodible metal ties of length 600 mm and of minimum section 6 mm × 30 mm, securely fastened to joists and built into walls as shown in Fig. 6 and Fig. 7. The anchors shall be provided in the direction of span of timber joists as well as in its perpendicular direction, at intervals of not more than 2 m in buildings up to two storeys and 1.25 m for buildings more than two storeys in height.

NOTES

1 In case precast RCC units are used for floors and roofs, it is necessary to interconnect them and suitably anchor them to the cross walls so that they can transfer lateral forces to the cross walls.

2 In case of small houses of conventional designs, not exceeding two storeys in height, stiffening effect of partitions and cross walls is such that metal anchors are normally not necessary in case of timber floor/roof and precast RCC floor/roof units.

b) in case of a wall, when slenderness ratio is based on its effective length; a cross wall/pier/buttress of thickness equal to or more than half the thickness of the supported wall or 90 mm, whichever is more, and length equal to or more than one fifth of the height of wall, is built at right angle to the wall (*see* Fig. 8) and bonded to it according to provision of **4.2.2.2** (d);

c) in case of a column, an RCC or timber beam/RS joist/roof truss, is supported on the column.

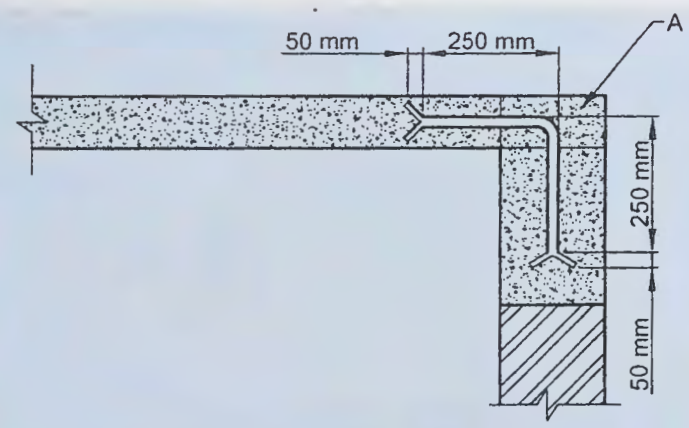

A = Cement concrete only at places where anchors are provided (200 mm in width in the direction perpendicular to the plane of paper)

FIG. 5 ANCHORING OF RCC SLAB WITH MASONRY WALL (WHEN SLAB DOES NOT BEAR ON WALL)

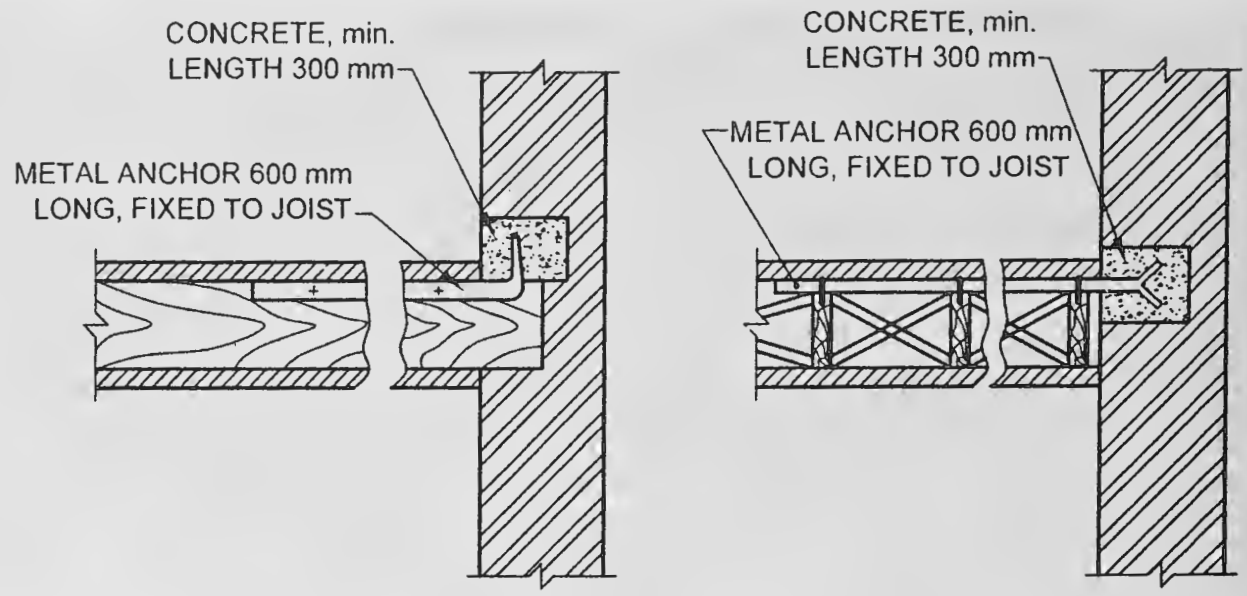

6A JOISTS AT RIGHT ANGLE TO WALL

6B JOISTS PARALLEL TO WALL

FIG. 6 TYPICAL DETAILS FOR ANCHORAGE OF SOLID WALLS

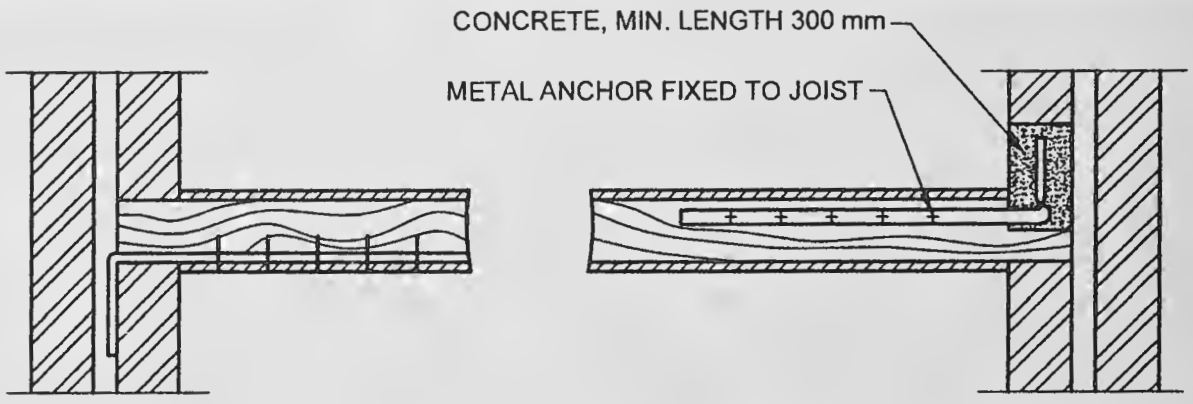

(i) (ii)

7A TIMBER JOISTS AT RIGHT ANGLES TO WALL

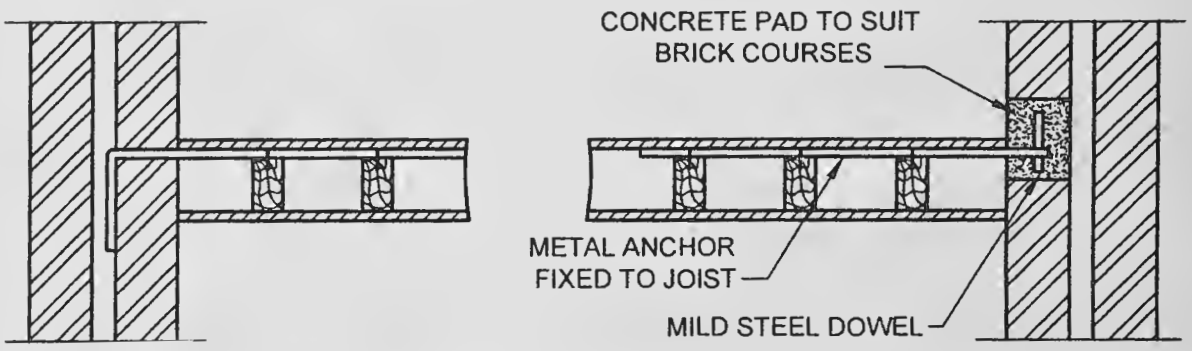

(i) (ii)

7B TIMBER JOISTS PARALLEL TO WALL

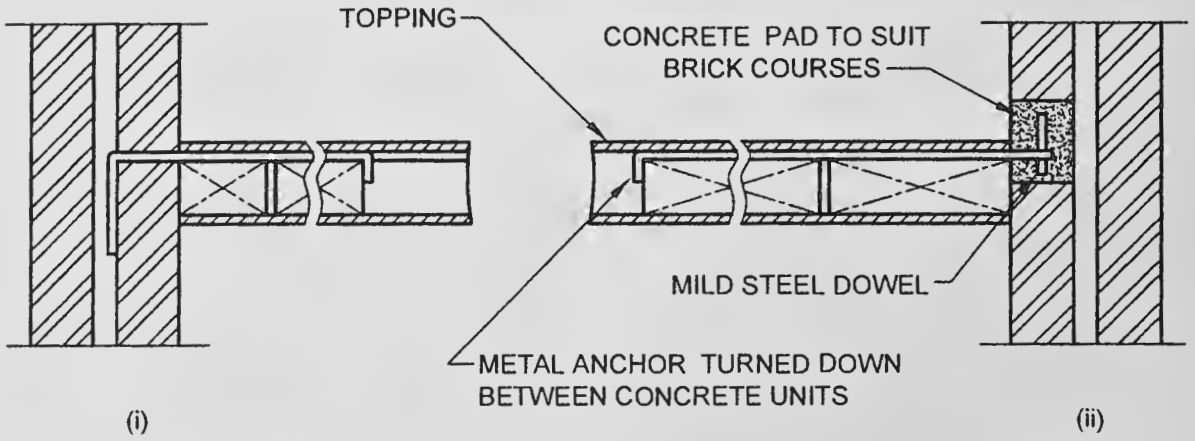

(i) (ii)

7C PRECAST CONCRETE FLOOR UNITS PARALLEL TO WALL

FIG. 7 TYPICAL DETAILS FOR ANCHORAGE OF CAVITY WALLS

In this case, the column will not be deemed to be laterally supported in the direction at right angle to it; and

d) in case of a column, an RCC beam forming a part of beam and slab construction is supported on the column, and slab adequately bears on stiffening walls. This construction will provide lateral support to the column, in the direction of both horizontal axes.

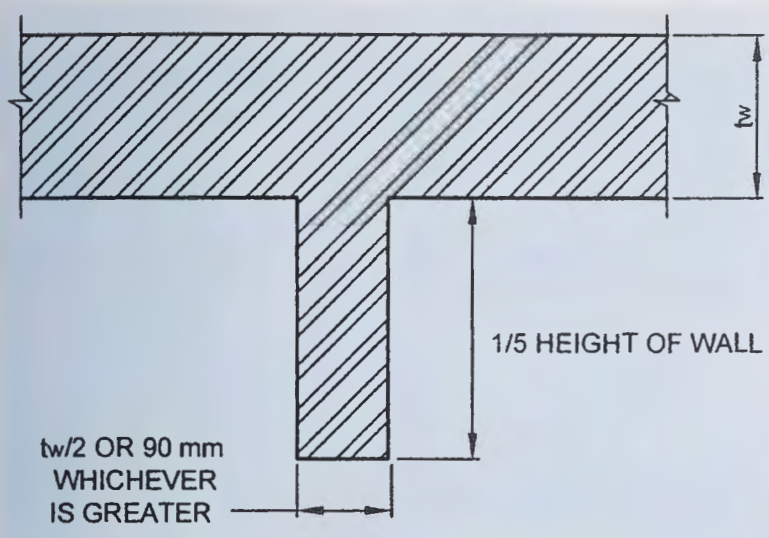

FIG. 8 MINIMUM DIMENSION FOR MASONRY WALL OR BUTTRESS EFFECTIVE LATERAL SUPPORT

4.2.2 *Stability*

A wall or column subjected to vertical and lateral loads may be considered to be provided with adequate lateral support from consideration of stability, if the construction providing the support is capable of resisting some of the following forces:

a) Simple static reactions at the point of lateral support to all the lateral loads; plus

b) 2.5 percent of the total vertical load that the wall or column is designed to carry at the point of lateral support.

4.2.2.1 For the purpose specified in **4.2.2**, if the lateral supports are in the vertical direction, these should meet the requirements given in **4.2.1.2** (a) and should also be capable of acting as horizontal girders duly anchored to the cross wall so as to transmit the lateral loads to the foundations without exceeding the permissible stresses in the cross walls.

4.2.2.2 In case of load bearing buildings up to four storeys, stability requirements of **4.2.2** may be deemed to have been met with, if

a) height to width ratio of building does not exceed 2;

b) cross walls acting as stiffening walls continuous from outer wall to outer wall or outer wall to a load bearing inner wall, and of thickness and spacings as given in Table 3 are provided. If stiffening wall or walls that are in a line, are interrupted by openings, length of solid wall or walls in the zone of the wall that is to be stiffened shall be at least one-fifth of height of the opening as shown in Fig. 9;

c) floors and roof either bear on cross walls or are anchored to those walls as in **4.2.1.2** such that all lateral loads are safely transmitted to those walls and through them to the foundation; and

d) cross walls are built jointly with the bearing walls and are jointly mortared, or the two interconnected by toothing. Alternatively, cross walls may be anchored to walls to be supported by ties of non-corrodible metal of minimum section 6 mm×35 mm and length 600 mm with ends bend at least 50 mm; maximum vertical spacing of ties being 1.2 m (*see* Fig. 10).

4.2.2.3 In case of halls exceeding 8.0 m in length, safety and adequacy of lateral supports shall always be checked by structural analysis.

Table 3 Thickness and Spacing of Stiffening Walls

[*Clause* 4.2.2.2(b)]

Sl No.	Thickness of Load Bearing Wall to be Stiffened	Height [1] of Storey Not to Exceed	Stiffening Wall [1]		
			Thickness not Less than		Maximum Spacing
	mm	m	1 to 3 Storeys mm	4 Storeys mm	m
(1)	(2)	(3)	(4)	(5)	(6)
i)	100	3.2	100	—	4.5
ii)	200	3.2	100	200	6.0
iii)	300	3.4	100	200	8.0
iv)	Above 300	5.0	100	200	8.0

[1] Storey height and maximum spacings as given are centre-to-centre dimensions.

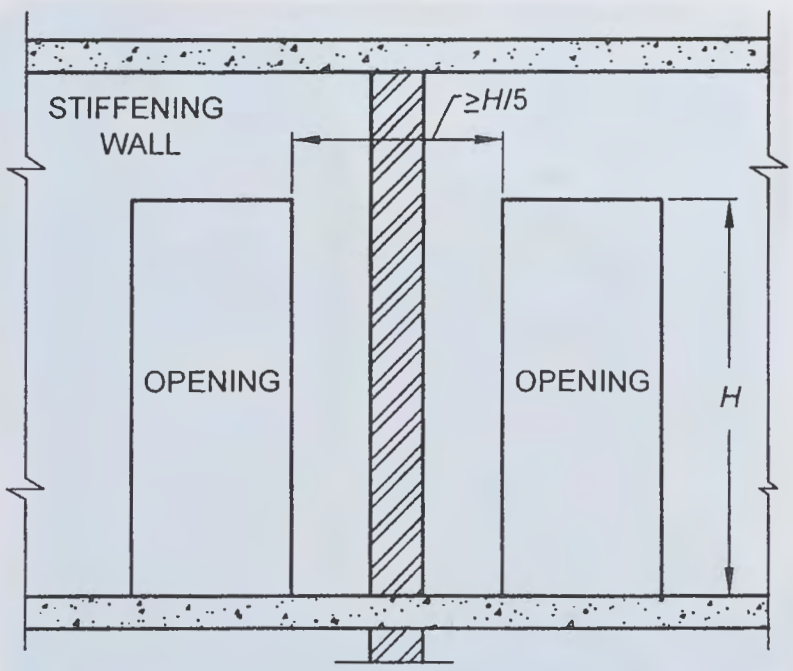

FIG. 9 OPENING IN STIFFENING WALL

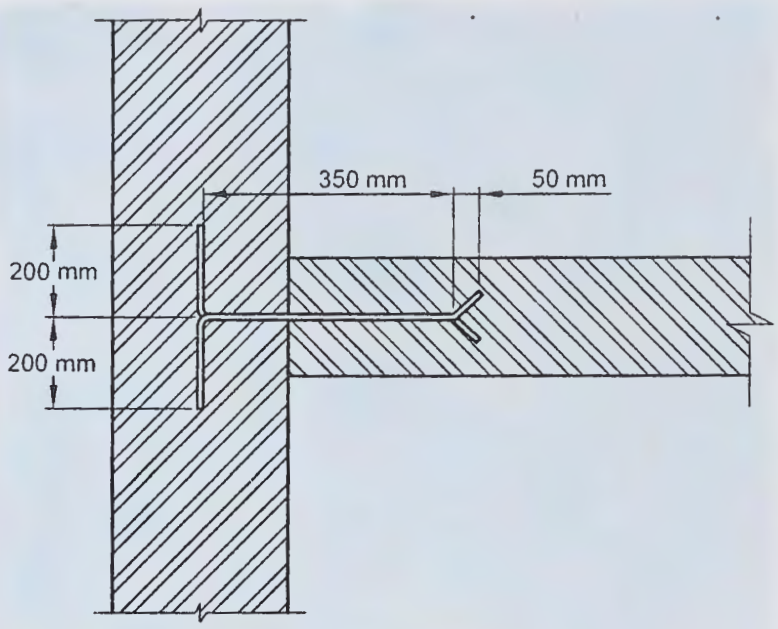

FIG. 10 ANCHORING OF STIFFENING WALL WITH SUPPORT WALL

4.2.2.4 A trussed roofing may not provide lateral support unless special measures are adopted to brace and anchor the roofing. However, in case of residential and similar buildings of conventional design with trussed roofing having cross walls, it may be assumed that stability requirements are met with by the cross walls and structural analysis for stability may be dispensed with.

4.2.2.5 Capacity of a cross wall, also called shear wall, sometimes to take horizontal loads and consequently bending moments increases, when parts of bearing walls act as flanges to the cross wall. Maximum overhanging length of bearing wall which could effectively function as a flange should be taken as 12 *t* or *H*/6, whichever is less in case of *T*/*I* shaped walls, and 6 *t* or *H*/16, whichever is less in case of *L*/*U* shaped walls, where *t* is the thickness of bearing wall and *H* is the total height of wall above the level being considered, as shown in Fig. 11.

4.2.2.6 *External walls of basement and plinth*

In case of external walls of basement and plinth, stability requirements of **4.2.2** may be deemed to have been met with, if

a) bricks used in basement and plinth have a minimum crushing strength of 5 N/mm² and mortar used in masonry is of Grade M1 or better;

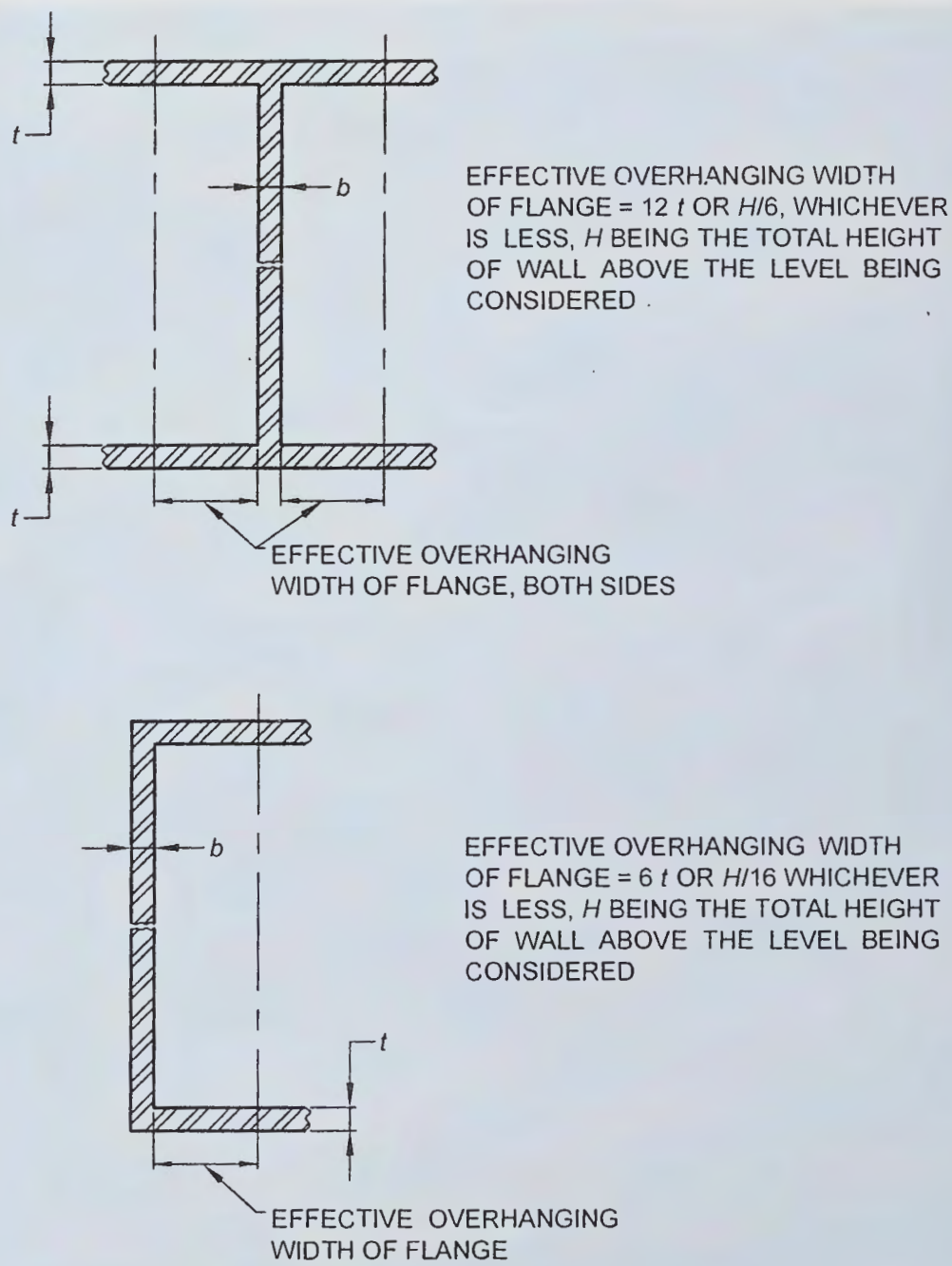

FIG. 11 TYPICAL DETAILS FOR ANCHORAGE OF SOLID WALLS

b) clear height of ceiling in basement does not exceed 2.6 m;

c) walls are stiffened according to provisions of **4.2.2.1**;

d) in the zone of action of soil pressure on basement walls, traffic load excluding any surcharge due to adjoining buildings does not exceed 5 kN/m^2 and terrain does not rise; and

e) minimum thickness of basement walls is in accordance with Table 4. However, if percentage opening in the basement wall for purposes like ventilation are more than 25 percent, then stability analysis/check need to be performed particularly for resistance to seismic loads.

NOTE — In case there is surcharge on basement walls from adjoining buildings, thickness of basement walls shall be based on structural analysis.

Table 4 Minimum Thickness of Basement Walls

[*Clause* 4.2.2.6(e)]

Sl No.	Height of the Ground Above Basement Floor Level		Minimum Nominal Thickness of Basement Wall
	Wall Loading (Permanent Load) Less than 50 kN/m	Wall Loading (Permanent Load) More than 50 kN/m	mm
(1)	(2)	(3)	(4)
i)	Up to 1.4 m	Up to 1.75 m	300
ii)	Up to 2 m	Up to 2.5 m	400

4.2.2.7 *Walls mainly subjected to lateral loads*

a) *Free standing wall* — A free standing wall such as compound wall or parapet wall is acted upon by wind force which tends to overturn it. This tendency to over-turning is resisted by gravity force due to self-weight of wall, and also by flexural moment of resistance on account of tensile strength of masonry. Free standing walls shall thus be designed as in **5.5.2.1**. If mortar used for masonry cannot be relied upon for taking flexural tension (*see* **5.4.2**), stability of free standing wall shall be ensured such that stability moment of wall due to self-weight equals or exceeds 1.5 times the overturning moment.

b) *Retaining wall* — Stability for retaining walls shall normally be achieved through gravity action but flexural moment of resistance could also be taken advantage of under special circumstances at the discretion of the designer (*see* **5.4.2**).

4.3 Effective Height

4.3.1 *Wall*

Effective height of a wall shall be taken as shown in Table 5 (*see* Fig. 12).

NOTE — A roof truss or beam supported on a column meeting the requirements of **4.2.2.1** is deemed to provide lateral support to the column only in the direction of the beam/truss.

Table 5 Effective Height of Walls

(*Clause* 4.3.1)

Sl No. (1)	Condition of Support (2)	Effective Height (3)
i)	Lateral as well as rotational restraint (that is, full restraint) at top and bottom. For example, when the floor/roof spans on the walls so that reaction to load of floor/roof is provided by the walls, or when an RCC floor/roof has bearing on the wall (minimum 90 mm), irrespective of the direction of the span foundation footings of a wall give lateral as well as rotational restraint	0.75 *H*
ii)	Lateral as well as rotational restraint (that is, full restraint) at one end and only lateral restraint (that is, partial restraint) at the other. For example, RCC floor/roof at one end spanning or adequately bearing on the wall and timber floor/roof not spanning on wall, but adequately anchored to it, on the other end	0.85 *H*
iii)	Lateral restraint, without rotational restraint (that is, partial restraint) on both ends. For example, timber floor/roof, not spanning on the wall but adequately anchored to it on both ends of the wall, that is, top and bottom	1.00 *H*
iv)	Lateral restraint as well as rotational restraint (that is, full restraint) at bottom but have no restraint at the top. For example, parapet walls with RCC roof having adequate bearing on the lower wall, or a compound wall with proper foundation on the soil.	1.50 *H*

NOTES

1 *H* is the height of wall between centres of support in case of RCC slabs and timber floors. In case of footings or foundation block, height (*H*) is measured from top of footing or foundation block. In case of roof truss, height (*H*) is measured up to bottom of the tie beam. In case of beam and slab construction, height should be measured from centre of bottom slab to centre of top beam. All these cases are illustrated by means of examples shown in Fig. 12.

2 For working out effective height, it is assumed that concrete DPC, when properly bonded with masonry, does not cause discontinuity in the wall.

3 Where membrane type damp-proof course or termite shield causes a discontinuity in bond, the effective height of wall may be taken to be greater of the two values calculated as follows :

a) Consider *H* from top of footing ignoring DPC and take effective height as 0.75*H*.

b) Consider H from top of DPC and take effective height as 0.85 *H*.

4 When assessing effective height of walls, floors not adequately anchored to walls shall not be considered as providing lateral support to such walls.

5 When thickness of a wall bonded to a pier is at least two-thirds of the thickness of the pier measured in the same direction, the wall and pier may be deemed to act as one structural element.

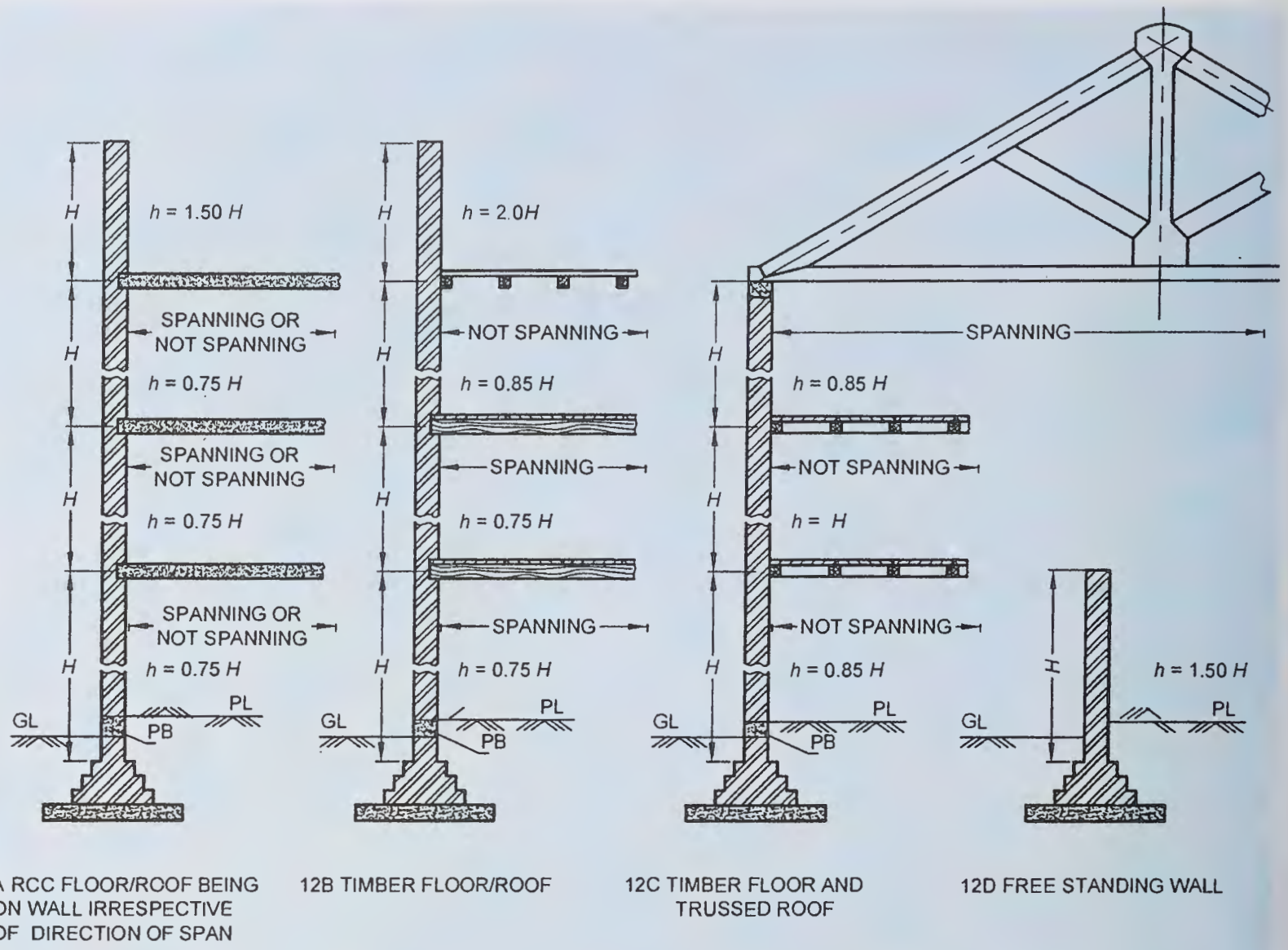

12A RCC FLOOR/ROOF BEING ON WALL IRRESPECTIVE OF DIRECTION OF SPAN

12B TIMBER FLOOR/ROOF

12C TIMBER FLOOR AND TRUSSED ROOF

12D FREE STANDING WALL

NOTE — If plinth band (PB) is equal to or more than 150 mm, height can be taken from above the plinth band.

FIG. 12 EFFECTIVE HEIGHT OF WALL

4.3.2 *Column*

In case of a column, effective height shall be taken as actual height for the direction it is laterally supported and as twice the actual height for the direction it is not laterally supported (*see* Fig. 13).

NOTES

1 A roof truss or beam supported on a column meeting the requirements of **4.2.2.1** is deemed to provide lateral support to the column only in the direction of the beam/truss.

2 When floor or roof consisting of RCC beams and slabs is supported on columns, the columns would be deemed to be laterally supported in both directions.

4.3.3 *Openings in Walls*

When openings occur in a wall such that masonry between the openings is by definition a column, effective height of masonry between the openings shall be reckoned as follows:

a) *When wall has full restraint at the top:*

1) Effective height for the direction perpendicular to plane of wall equals 0.75 H plus 0.25 H_1, where H is the distance between supports and H_1 is the height of the taller opening; and

2) Effective height for the direction parallel to the wall equals H, that is, the distance between the supports.

b) *When wall has partial restraint at the top and bottom:*

1) Effective height for the direction perpendicular to plane of wall equals H when height of neither opening exceeds 0.5 H and it is equal to 2 H when height of any opening exceeds 0.5 H; and

2) Effective height for the direction parallel to the plane of the wall equals 2 H.

4.4 Effective Length

Effective length of a wall shall be as given in Table 6.

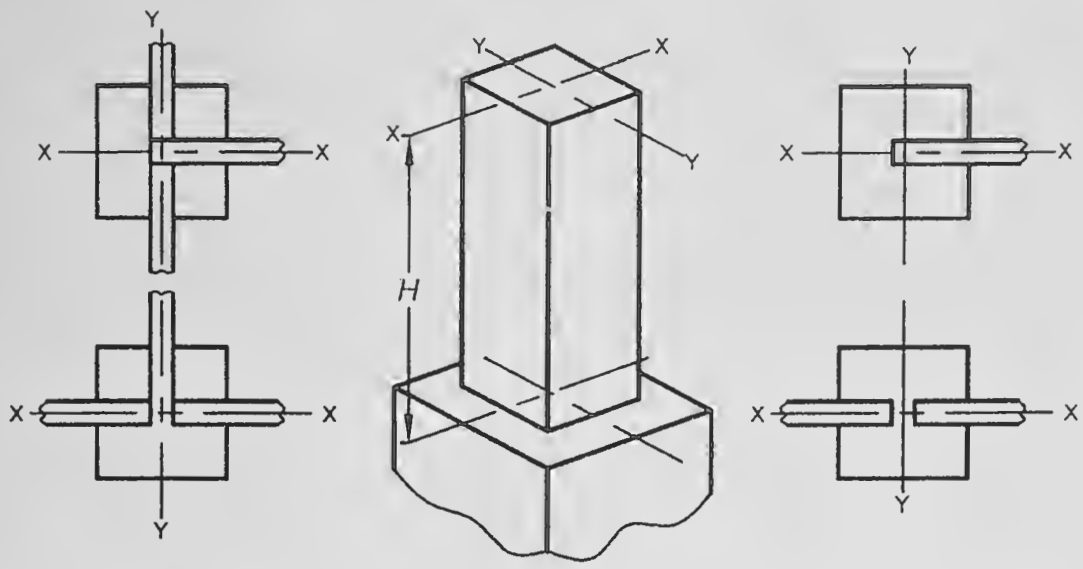

EFFECTIVE HEIGHT
ABOUT AXIS
X - X = 1.0 *H*
Y - Y = 1.0 *H*

13A

EFFECTIVE HEIGHT
ABOUT AXIS
X - X = 2.0 *H*
Y - Y = 1.0 *H*

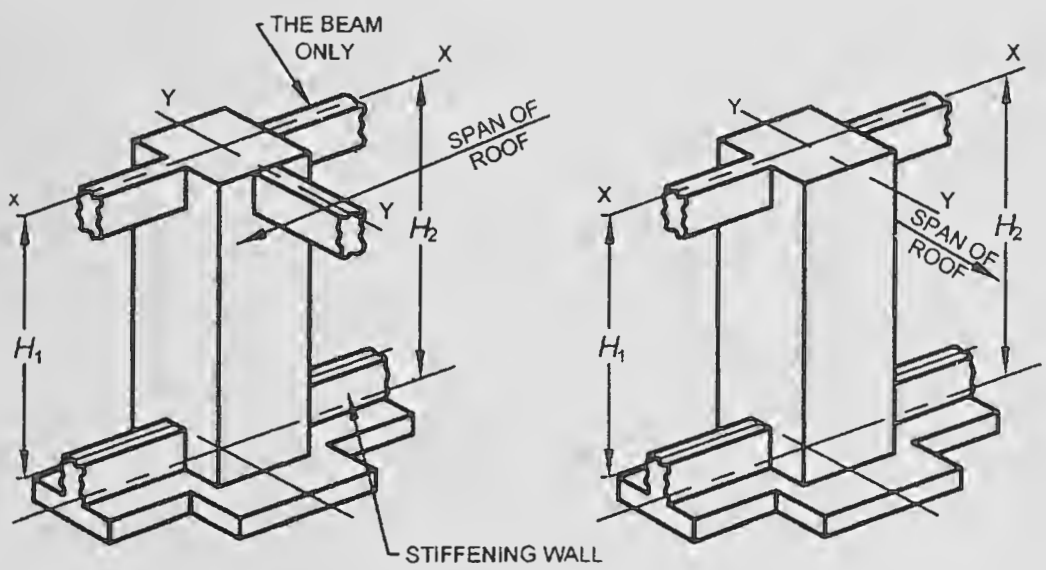

13B

13C

ROOF CONSTRUCTION	*EFFECTIVE HEIGHT ABOVE AXIS FIG. 13B*	*EFFECTIVE HEIGHT ABOVE AXIS FIG. 13C*
WITH PRECAST CONCRETE UNITS OF *IN-SITU* CONCRETE FLOOR OR ROOF	X - X = 1.0 H_2 Y - Y = 1.0 H_1 Y - Y = 1.5 H_1 (NO TIES)	X - X = 1.5 H_2 Y - Y = 1.0 H_1
WITH LIGHT DECK OR SIMILAR ROOF	X - X = 1.0 H_2 Y - Y = 1.0 H_1 Y - Y = 2.0 H_1 (NO TIES)	X - X = 2.0 H_2 Y - Y = 1.0 H_1

FIG. 13 EFFECTIVE HEIGHT OF WALL

Table 6 Effective Length of Walls

(*Clause* 4.4)

Sl No.	Conditions of Support (*See* Fig. 14)	Effective Length
(1)	(2)	(3)
i)	Where a wall is continuous and is supported by cross wall and there is no opening within a distance of $H/8$ from the face of cross wall (*see* Fig. 14) or Where a wall is continuous and is supported by piers/buttresses conforming to **4.2.1.2** (b)	0.8 L
ii)	Where a wall is supported by a cross wall at one end and continuous with cross wall at other end or Where a wall is supported by a pier/buttress at one end and continuous with pier/buttress at other end conforming to **4.2.1.2** (b)	0.9 L
iii)	Where a wall is supported at each end by cross wall or Where a wall is supported at each end by a pier/buttress conforming to **4.2.1.2** (b)	1.0 L
iv)	Where a wall is free at one end and continuous with a pier/buttress at the other end or Where a wall is free at one end and continuous with a pier/buttress at the other end conforming to **4.2.1.2** (b)	1.5 L
v)	Where a wall is free at one end and supported at the other end by a cross wall or Where a wall is free at one end and supported at the other end by a pier/buttress conforming to **4.2.1.2** (b) where L = length of wall from or between centres of cross wall, piers or buttress; and H = actual height of wall between centers of adequate lateral support.	2.0 L

NOTE — In case there is an opening taller than 0.5 H in a wall, ends of the wall at the openingshall be considered as free. Cross walls shall conform to **4.2.2.2** (d).

4.5 Effective Thickness

Effective thickness to be used for calculating slenderness ratio of a wall or column shall be obtained as in **4.5.1** to **4.5.5**.

4.5.1 For solid walls, faced walls or columns, effective thickness shall be the actual thickness.

4.5.2 For solid walls adequately bonded into piers, buttresses, effective thickness for determining slenderness ratio based on effective height shall be the actual thickness of wall multiplied by stiffening coefficient as given in Table 7. No modification in effective thickness, however, shall be made when slenderness ratio is to be based on effective length of walls.

4.5.3 For solid walls or faced walls stiffened by cross walls, appropriate stiffening coefficient may be determined from Table 7 on the assumption that the cross walls are equivalent to piers of width equal to the thickness of the cross wall and of thickness equal to three times the thickness of stiffened wall.

Table 7 Stiffening Coefficient for Walls Stiffened by Piers, Buttresses or Cross Walls

(*Clauses* 4.5.2 *and* 4.5.3)

Sl No.	Ratio $\frac{S_p}{w_p}$	Stiffening Coefficient		
		$\frac{t_p}{t_w} = 1$	$\frac{t_p}{t_w} = 2$	$\frac{t_p}{t_w} = 3$ or more
(1)	(2)	(3)	(4)	(5)
i)	6	1.0	1.4	2.0
ii)	8	1.0	1.3	1.7
iii)	10	1.0	1.2	1.4
iv)	15	1.0	1.1	1.2
v)	20 or more	1.0	1.0	1.0

where

S_p = centre-to-centre spacing of the pier or cross wall,

t_p = thickness of pier as defined in **2.1.3** (b) (*see* Fig. 1),

t_w = actual thickness of the wall proper (*see* Fig. 1), and

w_p = width of the pier in the direction of the wall or the actual thickness of the cross wall.

NOTE — Linear interpolation between the values given in this table is permissible but not extrapolation outside the limits given.

4.5.4 For cavity walls with both leaves of uniform thickness throughout, effective thickness shall be taken as two-thirds of the sum of the actual thickness of the two leaves.

4.5.5 For cavity walls with one or both leaves adequately bonded into piers, buttresses or cross walls at intervals, the effective thickness of the cavity wall shall be two-thirds of the sum of the effective thickness of each of the two leaves; the effective thickness of each leaf being calculated using **4.5.1** or **4.5.2** as appropriate.

4.6 Slenderness Ratio

4.6.1 *Walls*

For a wall, slenderness ratio shall be effective height divided by effective thickness or, effective length divided by the effective thickness, whichever is less. In case of a load bearing wall, slenderness ratio shall not exceed that given in Table 8. To reduce the slenderness ratio one and a half brick thick wall shall be up to ground level.

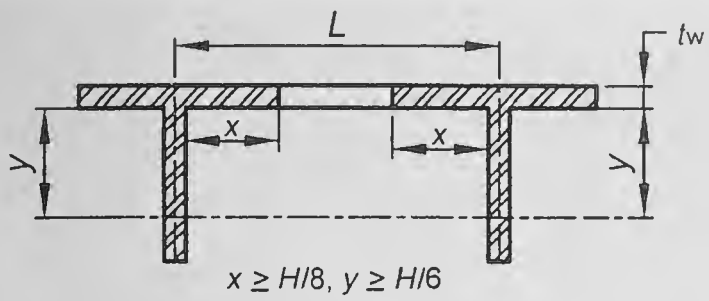

$x \geq H/8$, $y \geq H/6$
$l = 0.8\ L$

Wall is continuous at both ends and is supported by cross walls of thickness $t_w/2$ or 100 mm whichever is more, length of cross wall is not less than $H/6$, opening in wall is not less than $H/8$ from cross wall

14A CASE 1

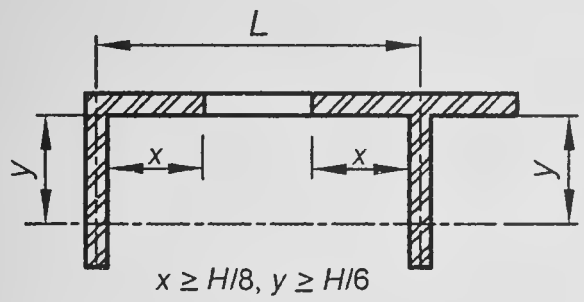

$x \geq H/8$, $y \geq H/6$
$l = 0.9\ L$

Same as case 1 except that one end of the wall is discontinuous

14B CASE 2

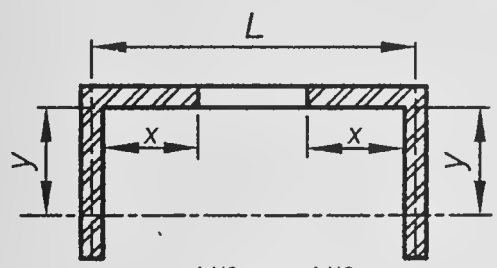

$x \geq H/8$, $y \geq H/6$
$l = L$

Same as case 1 except that wall is discontinuous on both ends

14C CASE 3

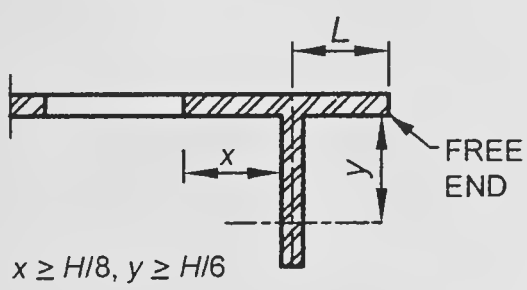

$x \geq H/8$, $y \geq H/6$
$l = 1.5\ L$

One end of the wall is free, other is supported by a cross wall and is continuous. There being no opening within $H/8$ from cross wall

14D CASE 4

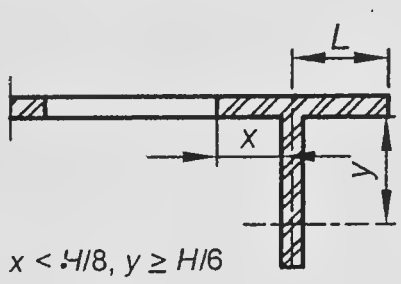

$x < H/8$, $y \geq H/6$
$l = 2\ L$

Same as case 4 but opening is within $H/8$ from cross wall and thus that end is taken as discontinuous

14E CASE 5

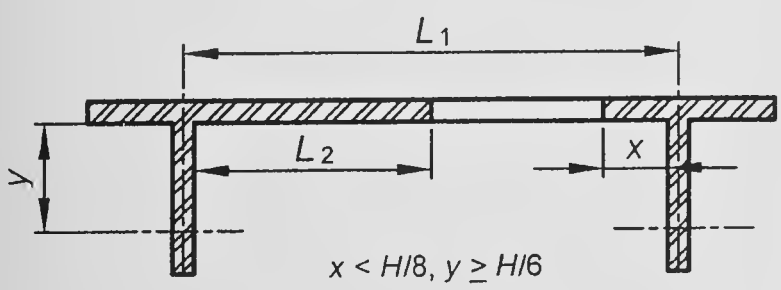

$x < H/8$, $y \geq H/6$
$l = 1.5\ L_2$

This illustration is with an opening which is within $H/8$ from cross wall

14F CASE 6

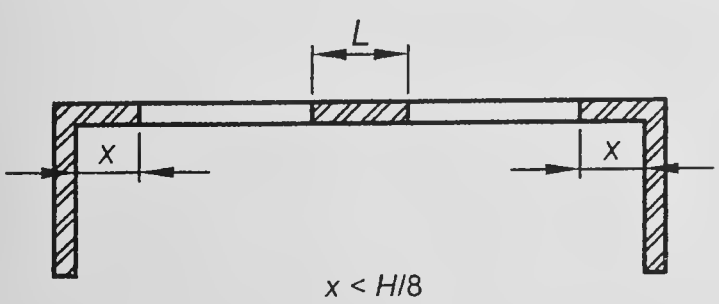

$x < H/8$

Wall length is between two opening which are closer than $H/8$ from cross walls

14G CASE 7

FIG. 14 EFFECTIVE LENGTH OF WALL

Table 8 Maximum Slenderness Ratio for a Load Bearing Wall

(*Clause* 4.6.1)

Sl No.	Number of Storeys	Maximum Slenderness Ratio	
		Using Portland Cement or Portland Pozzolana Cement in Mortar	Using Lime Mortar
(1)	(2)	(3)	(4)
i)	Not exceeding 2	27	20
ii)	Exceeding 2	27	13

4.6.2 *Columns*

For a column, slenderness ratio shall be taken to be the greater of the ratios of effective heights to the respective effective thickness, in the two principal directions. Slenderness ratio for a load bearing column shall not exceed 12.

4.7 Eccentricity

Eccentricity of vertical loading at a particular junction in a masonry wall shall depend on factors, such as extent of bearing, magnitude of loads, stiffness of slab or beam, fixity at the support and constructional details at junctions. No exact calculations are possible to make accurate assessment of eccentricity. Extent of eccentricity under any particular circumstances has, therefore, to be decided according to the best judgment of the designer. Some guidelines for assessment of eccentricity are given in Annex A.

5 STRUCTURAL DESIGN

5.1 General

The building as a whole shall be analysed by accepted principles of mechanics to ensure safe and proper functioning in service of its component parts in relation to the whole building. All component parts of the structure shall be capable of sustaining the most adverse combinations of loads, which the building may be reasonably expected to be subjected to during and after construction.

5.2 Design Loads

Loads to be taken into consideration for designing masonry components of a structure are:

a) dead loads of walls, columns, floors and roofs;

b) imposed loads of floors and roof;

c) wind loads on walls and sloping roof; and

d) seismic forces.

NOTE — When a building is subjected to other loads, such as vibration from railways; machinery, etc. these should be taken into consideration accordingly to the best judgment of the designer (*see also* Part 6 'Structural Design, Section 1 Loads, Forces and Effects' of the Code).

5.2.1 The design loads and other forces to be taken for the design of masonry structures shall conform to Part 6 'Structural Design, Section 1 Loads, Forces and Effects' of the Code.

NOTE — During construction, suitable measures shall be taken to ensure that masonry is not liable to damage or failure due to action of wind forces, back filling behind walls or temporary construction loads.

5.3 Load Dispersion

5.3.1 *General*

The angle of dispersion of vertical load on walls shall be taken as not more than 30° from the vertical.

5.3.2 *Arching Action*

Account may also be taken of the arching action of well-bonded masonry walls supported on lintels and beams, in accordance with established practice. Increased axial stresses in the masonry associated with arching action in this way, shall not exceed the permissible stresses given in **5.4**.

5.3.3 *Lintels*

Lintels that support masonry construction shall be designed to carry loads from masonry (allowing for arching and dispersion where applicable), and loads received from any other part of the structure. Length of bearing of lintel at each end shall not be less than 90 mm or one-tenth of the span, whichever is more, and area of the bearing shall be sufficient to ensure that stresses in the masonry (combination of wall stresses, stresses due to arching action and bearing stresses from the lintel) do not exceed the stresses permitted in **5.4** (*see* Annex C).

5.4 Permissible Stresses

5.4.1 *Permissible Compressive Stress*

Permissible compressive stress in masonry shall be based on value of basic compressive stress (f_b) as given in Table 9 and multiplying this value by factors known as stress reduction factor (k_s), area reduction factor (k_a) and shape modification factor (k_p) as detailed in **5.4.1.1** to **5.4.1.3**. Values of basic compressive stress given in Table 9 take into consideration crushing strength of masonry unit and grades of mortar, and hold good for values of slenderness ratio not exceeding 6, zero eccentricity and masonry unit having height to width ratio (as laid) equal to 0.75 or less.

Alternatively, basic compressive stress may be based on results of prism test given in Annex B on masonry made from masonry units and mortar to be actually used in a particular job.

Table 9 Basic Compressive Stresses for Masonry (After 28 days)

(*Clauses* 5.4.1 *and* 6.3.1)

Sl No.	Mortar Type (Ref Table 1)	Basic Compressive Stresses, in N/mm², Corresponding to Masonry Units of which Height to Width Ratio does not Exceed 0.75 and Crushing Strength, in N/mm², is not Less than											
		3.5	5.0	7.5	10	12.5	15	17.5	20	25	30	35	40
(1)	(2)	(3)	(4)	(5)	(6)	(7)	(8)	(9)	(10)	(11)	(12)	(13)	(14)
i)	H1	0.35	0.50	0.75	1.00	1.16	1.31	1.45	1.59	1.91	2.21	2.5	3.05
ii)	H2	0.35	0.50	0.74	0.96	1.09	1.19	1.30	1.41	1.62	1.85	2.1	2.5
iii)	M1	0.35	0.50	0.74	0.96	1.06	1.13	1.20	1.27	1.47	1.69	1.9	2.2
iv)	M2	0.35	0.44	0.59	0.81	0.94	1.03	1.10	1.17	1.34	1.51	1.65	1.9
v)	M3	0.25	0.41	0.56	0.75	0.87	0.95	1.02	1.10	1.25	1.41	1.55	1.78
vi)	L1	0.25	0.36	0.53	0.67	0.76	0.83	0.90	0.97	1.11	1.26	1.4	1.06
vii)	L2	0.25	0.31	0.42	0.53	0.58	0.61	0.65	0.69	0.73	0.78	0.85	0.95

NOTES

1 The table is valid for slenderness ratio up to 6 and loading with zero eccentricity.

2 The values given for basic compressive stress are applicable only when the masonry is properly cured.

3 Linear interpolation is permissible for units having crushing strengths between those given in the table.

4 The permissible stress for random rubble masonry may be taken as 75 percent of the corresponding stress for coarsed walling of similar materials.

5 The strength of ashlar masonry (natural stone masonry of massive type with thin joints) is closely related to intrinsic strength of the stone and allowable working stress in excess of those given in the table may be allowed for such masonry at the discretion of the designer.

6 For calculation of basic compressive stress of stabilized soil block having thickness 100 mm or more, reference to specialist literature may be made.

7 If the work is inadequately supervised, strength should be reduced to three-fourth or less at the discretion of the designer.

5.4.1.1 *Stress reduction factor*

This factor, as given in Table 10, takes into consideration the slenderness ratio of the element and also the eccentricity of loading.

Table 10 Stress Reduction Factor for Slenderness Ratio and Eccentricity

(*Clause* 5.4.1.1)

Sl No.	Slenderness Ratio	Eccentricity of Loading Divided by the Thickness of the Member					
		0	1/24	1/12	1/6	1/4	1/3
(1)	(2)	(3)	(4)	(5)	(6)	(7)	(8)
i)	6	1.00	1.00	1.00	1.00	1.00	1.00
ii)	8	0.95	0.95	0.94	0.93	0.92	0.91
iii)	10	0.89	0.88	0.87	0.85	0.83	0.81
iv)	12	0.84	0.83	0.81	0.78	0.75	0.72
v)	14	0.78	0.76	0.74	0.70	0.66	0.66
vi)	16	0.73	0.71	0.68	0.63	0.58	0.53
vii)	18	0.67	0.64	0.61	0.55	0.49	0.43
viii)	20	0.62	0.59	0.55	0.48	0.41	0.34
ix)	22	0.56	0.52	0.48	0.40	0.32	0.24
x)	24	0.51	0.47	0.42	0.33	0.24	—
xi)	26	0.45	0.40	0.35	0.25	—	—
xii)	27	0.43	0.38	0.33	0.22	—	—

NOTES

1 Linear interpolation between values is permitted.

2 Where in special cases the eccentricity of loading lies between 1/3 and 1/2 of the thickness of the member, the stress reduction factor should vary linearly between unity and 0.20 for slenderness ratio of 6 and 20, respectively.

3 Slenderness ratio of a member for sections within 1/8 of the height of the member above or below a lateral support may be taken to be 6.

5.4.1.2 *Area reduction factor*

This factor takes into consideration smallness of the sectional area of the element and is applicable when sectional area of the element is less than 0.2 m². The factor $k_a = 0.7 + 1.5A$, A being the area of section, in m².

5.4.1.3 *Shape modification factor*

This factor takes into consideration the shape of the unit, that is, height to width ratio (as laid) and is given in Table 11. This factor is applicable for units for crushing strength up to 15 N/mm².

Table 11 Shape Modification Factor for Masonry Units

(*Clause* 5.4.1.3)

Sl No.	Height to Width Ratio of Units (As Laid)	Shape Modification Factor (k_p) for Units Having Crushing Strength N/mm²			
		Up to 5.0	7.5	10.0	15.0
(1)	(2)	(3)	(4)	(5)	(6)
i)	Up to 0.75	1.0	1.0	1.0	1.0
ii)	1.0	1.2	1.1	1.1	1.0
iii)	1.5	1.5	1.3	1.2	1.1
iv)	2.0 to 4.0	1.8	1.5	1.3	1.2

NOTE — Linear interpolation between values is permissible.

5.4.1.4 *Increase in permissible compressive stresses allowed for eccentric vertical loads, lateral loads under certain conditions*

In members subjected to eccentric and/or lateral loads, increase in permissible compressive stress is allowed as follows:

a) When resultant eccentricity ratio exceeds 1/24 but does not exceed 1/6, 25 percent increase in permissible compressive stress is allowed in design.

b) When resultant eccentricity ratio exceeds 1/6, 25 percent increase in permissible stress is allowed but the area of the section under tension shall be disregarded for computing the load carrying capacity of the member.

NOTE — When resultant eccentricity ratio of loading is 1/24 or less, compressive stress due to bending shall be ignored and only axial stress need to be computed for the purpose of design.

5.4.1.5 *Increase in permissible compressive stress for walls subjected to concentrated loads*

When a wall is subjected to a concentrated load (a load being taken to be concentrated when area of supporting wall equals or exceeds three times the bearing area), certain increase in permissible compressive stress may be allowed because of dispersal of the load. Since, according to the present state of art, there is diversity of views in regard to manner and extent of dispersal, design of walls subjected to concentrated loads may, therefore, be worked out as per the best judgment of the designer. Some guidelines in this regard are given in Annex C.

5.4.2 *Permissible Tensile Stress*

As a general rule, design of masonry shall be based on the assumption that masonry is not capable of taking any tension. However, in case of lateral loads normal to the plane of wall, which causes flexural tensile stress, as for example, panel, curtain partition and free standing walls, flexural tensile stresses as follows may be permitted in the design for masonry:

a) Grade M1 or better mortar
   1) 0.07 N/mm^2 for bending in the vertical direction where tension developed is normal to bed joints.
   2) 2) 0.14 N/mm^2 for bending in the longitudinal direction where tension developed is parallel to bed joints, provided crushing strength of masonry units is not less than 10 N/mm^2.

b) Grade M2 mortar
   1) 0.05 N/mm^2 for bending in the vertical direction where tension developed is normal to bed joints.
   2) 0.10 N/mm^2 for bending in the longitudinal direction where tension developed is parallel to bed joints, provided crushing strength of masonry units is not less than 7.5 N/mm^2.

NOTES

1 No tensile stress is permitted in masonry in case of water-retaining structures in view of water in contact with masonry. Also no tensile stress is permitted in earth-retaining structures, in view of the possibility of presence of water at the back of such walls.

2 Allowable tensile stress in bending in the vertical direction may be increased to 0.1 N/mm^2 for M1 mortar and 0.07 N/mm^2 for M2 mortar in case of boundary walls/compound at the discretion of the designer, since there is not much risk to life and property in the event of failure of such walls.

5.4.3 *Permissible Shear Stress*

In case of walls built in mortar not leaner than Grade M1 (*see* Table 1) and resisting horizontal forces in the plane of the wall, permissible shear stress calculated on the area of bed joints, shall not exceed the value obtained by the formula given below, subject to a maximum of 0.5 N/mm^2:

$$f_s = 0.1 + f_d/6$$

f_d = compressive stress due to dead loads, in N/mm^2; and

f_s = permissible shear stress, in N/mm^2.

5.4.4 If there is tension in any part of a section of masonry, the area under tension shall be ignored while working out shear stress on the section.

5.5 Design Thickness/Cross-Section

5.5.1 *Walls and Columns Subjected to Vertical Loads*

Walls and columns bearing vertical loads shall be designed on the basis of permissible compressive stress. Design consists in determining thickness in case of walls and section in case of columns in relation to strength of masonry units and grade of mortar to be used, taking into consideration various factors, such as slenderness ratio, eccentricity, area of section, workmanship, quality of supervision, etc, subject further to provisions of **5.5.1.1** to **5.5.1.4**.

5.5.1.1 *Solid walls*

Thickness used for design calculation shall be the actual thickness of masonry computed as the sum of the average dimensions of the masonry units specified in the relevant standard, together with the specified joint thickness. In masonry with raked joints, thickness shall be reduced by the depth of raking of joints for plastering/pointing.

5.5.1.2 *Cavity walls*

a) Thickness of each leaf of a cavity wall shall not be less than 75 mm.

b) Where the outer leaf is half masonry unit in thickness, the uninterrupted height and length of this leaf shall be limited so as to avoid undue loosening of ties due to differential movements

between the two leaves. The outer leaf shall, therefore, be supported at least at every third storey or at every 10 m of height, whichever is less and at every 10 m or less along the length.

c) Where the load is carried by both leaves of a wall of a cavity construction, the permissible stress shall be based on the slenderness ratio derived from the effective thickness of the wall as given in **4.5.4** or **4.5.5**. The eccentricity of the load shall be considered with respect to the centre of gravity of the cross-section of the wall.

d) Where the load is carried by one leaf only, the permissible stress shall be the greater of values calculated by the following two alternative methods:

1) The slenderness ratio is based on the effective thickness of the cavity wall as a whole as given in **4.5.4** or **4.5.5** and on the eccentricity of the load with respect to the centre of gravity of the cross-section of the whole wall (both leaves) (This is the same method as where the load is carried by both the leaves but the eccentricity will be more when the load is carried by one leaf only).

2) The slenderness ratio is based on the effective thickness of the loaded leaf only using **4.5.1** and **4.5.2**, and the eccentricity of the load will also be with respect to the centre of gravity of the loaded leaf only.

In either alternative, only the actual thickness of the load bearing leaf shall be used in arriving at the cross-sectional area resisting the load (*see* **5.5.1.1**).

5.5.1.3 *Faced wall*

The permissible load per length of wall shall be taken as the product of the total thickness of the wall and the permissible stress in the weaker of the two materials. The permissible stress shall be found by using the total thickness of the wall when calculating the slenderness ratio.

5.5.1.4 *Veneered wall*

The facing (veneer) shall be entirely ignored in calculations of strength and stability. For the purpose of determining the permissible stress in the backing, the slenderness ratio shall be based on the thickness of the backing alone.

5.5.2 *Walls and Columns Mainly Subjected to Lateral Loads*

5.5.2.1 *Free standing walls*

a) Free standing walls, subjected to wind pressure or seismic forces shall be designed on the basis of permissible tensile stress in masonry or stability as in **4.2.2.4**. However, in seismic Zones II, free-standing walls may be apportioned without making any design calculations with the help of Table 12 provided the mortar used is of grade not leaner than M1.

b) If there is a horizontal damp-proof course near the base of the wall, that is, not capable of developing tension vertically, the minimum wall thickness should be the greater of that calculated from either,

1) the appropriate height to thickness ratio given in Table 12 reduced by 25 percent, reckoning the height from the level of the damp-proof course; or

2) the appropriate height to thickness ratio given in Table 12 reckoning the height from the lower level at which the wall is restrained laterally.

Table 12 Height to Thickness Ratio of Free Standing Walls Related to Wind Speed

[*Clause* 5.5.2.1(a) *and* (b)]

Sl No.	Design Wind Pressure N/mm^2	Height to Thickness Ratio
(1)	(2)	(3)
i)	Up to 285	10
ii)	575	7
iii)	860	5
iv)	1 150	4

NOTES

1 For intermediate values, linear interpolation is permissible.

2 Height is to be reckoned from 150 mm below ground level or top of footing/foundation block, whichever is higher, and up to the top edge of the wall.

3 The thickness should be measured including the thickness of the plaster.

5.5.2.2 *Retaining walls*

Normally masonry of retaining walls shall be designed on the basis of zero-tension, and permissible compressive stress. However, in case of retaining walls for supporting horizontal thrust from dry materials, retaining walls may be designed on the basis of permissible tensile stress at the discretion of the designers.

5.5.3 *Walls and Columns Subjected to Vertical as well as Lateral Loads*

For walls and columns, stress worked out separately

for vertical loads as in **5.5.1** and lateral loads as in **5.5.2** shall be combined and elements designed on the basis of permissible stress.

5.5.4 *Walls Subjected to In-Plane Bending and Vertical Loads (Shear Walls)*

Walls subjected to in-plane bending and vertical loads, that is, shear walls shall be designed on the basis of no tension with permissible shear stress and permissible compressive stress.

5.5.5 *Non-Load Bearing Walls*

Non-load bearing walls, such as panel walls, curtain walls and partition walls which are mainly subjected to lateral loads, according to present state of art, are not capable of precise design and only approximate methods based on some tests are available. Guidelines for approximate design of these walls are given in Annex D.

6 GENERAL REQUIREMENTS

6.1 Methods of Construction

6.1.1 *General*

Construction of the following types of load bearing and non-load bearing masonry walls shall be carried out in accordance with good practice [6-4(4)]:

a) Brickwork,
b) Stone masonry,
c) Hollow concrete block masonry,
d) Gypsum partition blocks,
e) Autoclaved cellular concrete block masonry, and
f) Lightweight concrete block masonry.

6.1.2 *Construction of Buildings in Seismic Zones*

Special features of construction for earthquake resistant masonry buildings in Seismic Zones II, III, IV and V shall be applicable according to **8**.

6.2 Minimum Thickness of Walls from Consideration other than Structural

Thickness of walls determined from consideration of strength and stability may not always be adequate in respect of other requirements, such as resistance to fire, thermal insulation, sound insulation and resistance to damp penetration for which reference may be made to the appropriate Parts/Sections of the Code, and thickness suitably increased, where found necessary.

6.3 Workmanship

6.3.1 *General*

Workmanship has considerable effect on strength of masonry and bad workmanship may reduce the strength of brick masonry to as low as half the intended strength. The basic compressive stress values for masonry as given in Table 9 holds good for commercially obtainable standards of workmanship with reasonable degree of supervision.

6.3.2 *Bedding of Masonry Units*

Masonry units shall be laid on a full bed of mortar with frog, if any, upward such that cross-joints and wall joints are completely filled with mortar. Masonry units which are moved after initial placement shall be re-laid in fresh mortar, discarding the disturbed mortar.

6.3.3 *Bond*

Cross-joints in any course of one brick thick masonry wall shall be not less than one-fourth of a masonry unit in horizontal direction from the cross-joints in the course below. In masonry walls more than one brick in thickness, bonding through the thickness of wall shall be provided by either header units or by other equivalent means in accordance with good practice [6-4(5)].

6.3.4 *Verticality and Alignment*

All masonry shall be built true and plumb within the tolerances prescribed below; care shall be taken to keep the perpends properly aligned:

a) Deviation from vertical within a storey shall not exceed 6 mm per 3 m height.
b) Deviation in verticality in total height of any wall of a building more than one storey in height shall not exceed 12.5 mm.
c) Deviation from position shown on plan of any brickwork shall not exceed 12.5 mm.
d) Relative displacement between load bearing walls in adjacent storeys intended to be in vertical alignment shall not exceed 6 mm.
e) Deviation of bed-joint from horizontal in a length of 12 m shall not exceed 6 mm subject to a maximum deviation of 12 mm.
f) Deviation from the specified thickness of bed joints, cross-joints and perpends shall not exceed one-fifth of the specified thickness.

NOTE — These tolerances have been specified from the point of view of their effect on the strength of masonry. The permissible stress recommended in **5.3** may be considered applicable only, if these tolerances are adhered to.

6.4 Joints to Control Deformation and Cracking

Special provision shall be made to control or isolate thermal and other movements so that damage to the fabric of the building is avoided and its structural sufficiency preserved. Design and installation of joints shall be done according to the appropriate

recommendations in accordance with good practice [6-4(6)].

6.5 Chases, Recesses and Holes

6.5.1 Chases, recesses and holes are permissible in masonry only if these do not impair strength and stability of the structure.

6.5.2 In masonry, designed by structural analysis, all chases, recesses and holes shall be considered in structural design and detailed in building plans.

6.5.3 When chases, recesses and holes have not been considered in structural design and are not shown in drawings, these may be provided, subject to the constraints and precautions specified in **6.5.3.1** to **6.5.3.10**.

6.5.3.1 As far as possible, services should be planned with the help of vertical chases and use of horizontal chases should be avoided.

6.5.3.2 For load bearing walls, depth of vertical and horizontal chases shall not exceed one-third and one-sixth of the wall thickness, respectively.

6.5.3.3 Vertical chases shall not be closer than 2 m in any stretch of wall and shall not be located within 345 mm of an opening or within 230 mm of a cross wall that serves as a stiffening wall for stability. Width of a vertical chase shall not exceed thickness of wall in which it occurs.

6.5.3.4 When unavoidable horizontal chases of width not exceeding 60 mm in a wall having slenderness ratio not exceeding 15 may be provided. These shall be located in the upper or lower middle third height of wall at a distance not less than 600 mm from a lateral support. No horizontal chase shall exceed 1 m in length and there shall not be more than 2 chases in any one wall. Horizontal chases shall have minimum mutual separation distance of 500 mm. Sum of lengths of all chases and recesses in any horizontal plane shall not exceed one-fourth the length of the wall.

6.5.3.5 Holes for supporting put-logs of scaffolding shall be kept away from bearings of beams, lintels, and other concentrated loads. If unavoidable, stresses in the affected area shall be checked to ensure that these are within safe limits.

6.5.3.6 No chase, recess or hole shall be provided in any stretch of a masonry wall, the length of which is less than four times the thickness of wall, except when found safe by structural analysis.

6.5.3.7 Masonry directly above a recess or a hole, if wider than 300 mm, shall be supported on a lintel. No lintel, however, is necessary in case of a circular recess or hole exceeding 300 mm in diameter provided upper half of the recess or hole is built as a semi-circular arch of adequate thickness and there is an adequate length of masonry on the sides of openings to resist the horizontal thrust.

6.5.3.8 As far as possible, chases, recesses and holes in masonry should be left (inserting sleeves, where necessary) at the time of construction of masonry so as to obviate subsequent cutting. If cutting is unavoidable, it should be done without damage to the surrounding or residual masonry. It is desirable to use such tools for cutting which depend upon rotary and not on heavy impact for cutting action.

6.5.3.9 No chase, recess or hole shall be provided in half-brick load bearing wall, excepting the minimum number of holes needed for scaffolding.

6.5.3.10 Chases, recesses or holes shall not be cut into walls made of hollow or perforated units, after the units have been incorporated in masonry.

6.6 Corbelling

6.6.1 Where corbelling is required for the support of some structural element, maximum projection of masonry unit should not exceed one-half of the height of the unit or one-half of the built-in part of the unit and the maximum horizontal projection of the corbel should not exceed one-third of the wall thickness.

6.6.2 The load per unit length on a corbel shall not be greater than half of the load per unit length on the wall above the corbel. The load on the wall above the corbel, together with four times the load on the corbel, shall not cause the average stress in the supporting wall or leaf to exceed the permissible stresses given in **5.4**.

6.6.3 It is preferable to adopt header courses in the corbelled portion of masonry from considerations of economy and stability.

7 REINFORCED BRICK AND REINFORCED BRICK CONCRETE FLOORS AND ROOFS

The construction and design of reinforced brick and reinforced brick concrete floors and roof shall be in accordance with good practices [6-4(7)].

8 SPECIAL CONSIDERATION FROM EARTHQUAKE POINT OF VIEW

8.0 Special features of design and construction for earthquake resistant masonry buildings are given in **8.2** to **8.8.2**. However, special features of design and construction for improving earthquake resistance of low strength masonry buildings is covered in **9**.

8.1 For the purpose of **8** and **9**, the definitions given below shall apply in addition to those given in **2**.

8.1.1 *Separation Section* — A gap of specified width

between adjacent buildings or parts of the same building either left uncovered or covered suitably to permit movement in order to avoid pounding due to earthquake.

8.1.1.1 *Crumple section* — The separation gap filled with appropriate material that crumples or factures in the event of an earthquake.

8.1.2 *Centre of Rigidity* — The point in a structure where application of lateral force produces equal deflections of its components at any level in any particular direction.

8.1.3 *Shear Wall* — A wall designed to resist lateral force in the own plane. Braced frames, subjected primarily to axial stresses, shall be considered as shear walls for the purpose of this definition.

8.1.4 *Space Frame* — A three-dimensional structural system comprised of interconnected members, without shear or bearing walls, so that to function as a complete self-contained unit with or without the aid of horizontal diaphragms or floor bracing systems.

8.1.4.1 *Vertical load carrying frame* — A space frame designed to carry all the vertical loads, the horizontal loads being resisted by shear walls.

8.1.4.2 *Moment resistant frame* — A space frame capable of carrying all vertical and horizontal loads, by developing bending moments in the members and at joints.

8.1.4.3 *Moment resistant frame with shear walls* — A space frame with moment resistant joints and strengthened by shear walls to assist in carrying horizontal loads.

8.1.5 *Box System* — A bearing wall structure without a space frame, the horizontal forces being resisted by the walls that act as shear walls.

8.1.6 *Band* — A reinforced concrete or reinforced brick runner provided in the walls to tie them together and to impart horizontal bending strength in them.

NOTE — For low strength masonry buildings, wooden runners may also be used as runner.

8.1.7 *Seismic Zone and Seismic Coefficient* — The Seismic Zones II to IV as classified in **5** of Part 6 'Structural Design, Section 1 Loads, Forces and Effects' of the Code and corresponding basic seismic coefficient α_o as specified in **3.4** of good practice [6-4(8)].

8.1.8 *Design Horizontal Seismic Coefficient* — The value of horizontal seismic coefficient A_h computed taking into account the soil-foundation system and the importance factor as specified in **6.4** of good practice [6-4(9)].

8.1.9 *Concrete Grades* — 28 day compressive strength of concrete cubes of 150 mm size, in MPa; for example, for Grade M20 as per good practice[6-4(10)], the characteristic compressive strength equals to 20 MPa.

8.1.10 *Zone Factor (Z)* — It is a factor to obtain the design spectrum depending on the perceived maximum seismic risk characterized by maximum considered earthquake (MCE) in the zone in which the structure is located.

8.2 General Principles

The general principles given in **8.2.1** to **8.2.9** shall be observed in construction of earthquake resistant buildings.

8.2.1 *Lightness*

Since the earthquake force is a function of mass, the weight of the building shall be as minimum as possible, consistent with structural safety and functional requirements. Roofs and upper storeys of buildings, in particular, should be designed as light as possible.

8.2.2 *Continuity of Construction*

8.2.2.1 As far as possible, the parts of the building should be tied together in such a manner that the building acts as one unit.

8.2.2.2 For parts of buildings between separation or crumple sections to expansion joints, floor slabs shall be continuous throughout as far as possible. Concrete slabs shall be rigidly connected or integrally cast with the support beams.

8.2.2.3 Additions to the structures shall be accompanied by the provision of separation or crumple sections between the new and the existing structures as far as possible, unless positive measures are taken to establish continuity between the existing and the new construction.

8.2.2.4 Alteration to the building structure shall be done by maintaining its structural stability by ensuring proper load path.

8.2.3 *Projecting and Suspended Parts*

8.2.3.1 Projecting parts shall be avoided as far as possible. If the projecting parts cannot be avoided, they shall be properly reinforced and firmly tied to the main structure, and their design shall be in accordance with good practice [6-4(8)].

8.2.3.2 Ceiling plaster shall preferably be avoided. When it is unavoidable, the plaster shall be as thin as possible.

8.2.3.3 Suspended ceiling shall be avoided as far as possible. Where provided they shall be light, adequately framed and secured to which electrical fixtures shall be fully secured.

8.2.4 *Building Configuration*

8.2.4.1 In order to minimise torsion and stress concentration, provisions given in **8.2.4.2** to **8.2.4.4** should be complied with as relevant.

8.2.4.2 The building should have a simple rectangular plan and be symmetrical both with respect to mass and rigidity so that the centre of mass and rigidity of the building coincide with each other in which case no separation sections other than expansion joints are necessary. For provision of expansion joints reference may be made to good practice [6-4(6)].

8.2.4.3 If symmetry of the structure is not possible in plan, elevation or mass, provision shall be made for torsional and other effects due to earthquake forces in the structural design or the parts of different rigidities may be separated through crumple sections. The length of such building between separation sections shall not preferably exceed three times the width.

NOTE — As an alternative to separation section to reduce torsional moments, the centre of rigidity of the building may be brought close or coincident to the centre of mass by adjusting the locations and/or sizes of columns and walls.

8.2.4.4 Buildings having plans with shapes like L, T, E and Y shall preferably be separated into rectangular parts by providing separation sections at appropriate places. Typical examples are shown in Fig. 15.

NOTES

1 The buildings with small lengths of projections forming L, T, E or Y shapes need not be provided with separation section. In each cases the length of the projection may not exceed 15 to 20 percent of the total dimension of the building in the direction of the projection (*see* Fig. 16).

2 For buildings with minor asymmetry in plan and elevation, separation sections may be omitted.

8.2.5 *Strength in Various Directions*

The structure shall be designed to have adequate strength against earthquake effects along both the horizontal axes. The design shall also be safe considering the reversible nature of earthquake forces.

8.2.6 *Foundations*

The structure shall not be founded on such soils which shall subside or liquefy during an earthquake, resulting in large differential settlements (*see also* **8.3.3.3**).

8.2.7 *Ductility*

The main structural elements and their connection shall be designed to have a ductile failure. This shall enable the structure to absorb energy during earthquakes to avoid sudden collapse of the structure. Providing reinforcing steel in masonry at critical sections, as specified in this Section shall not only increase strength and stability but also ductility. The details for achieving ductility in reinforced concrete structures is given in good practice [6-4(11)].

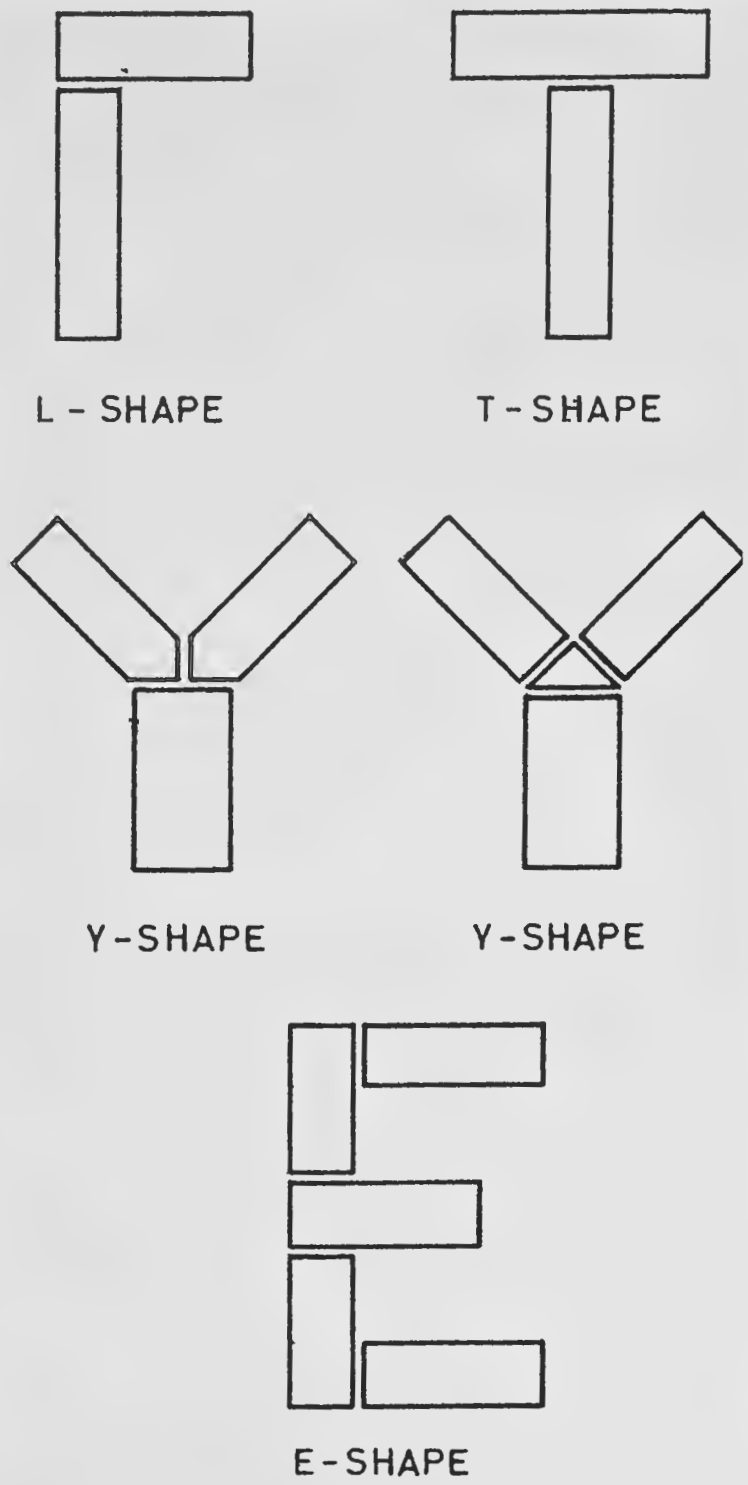

FIG. 15 TYPICAL SHAPES OF BUILDING WITH SEPARATION SECTIONS

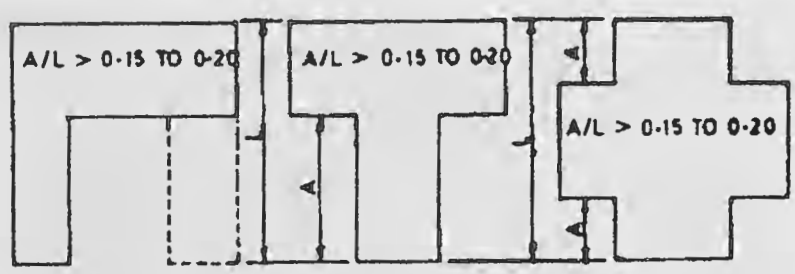

16A Plan Irregularities

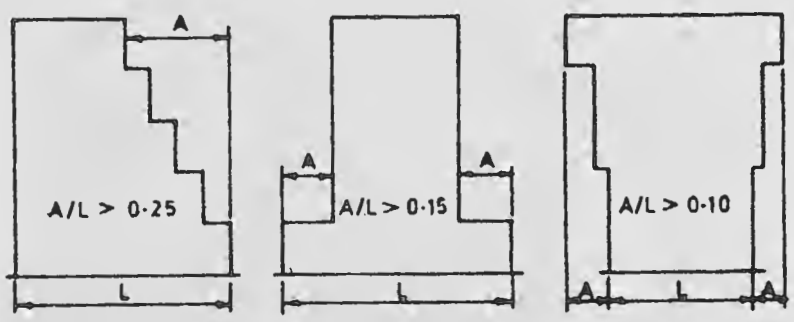

16B Vertical Irregularities

FIG. 16 PLAN AND VERTICAL IRREGULARITIES

8.2.8 *Damage to Non-Structural Parts*

Suitable details shall be worked out to connect the non-structural parts with the structural framing so that the deformation of the structural frame leads to minimum damage of the non-structural elements.

8.2.9 *Fire Safety*

Fire frequently follows an earthquake and therefore, buildings shall be constructed to make them fire resistant in accordance with the provisions of Part 4 'Fire and Life Safety' of the Code for fire safety.

8.3 Special Construction Features

8.3.1 *Separation of Adjoining Structures*

8.3.1.1 Separation of adjoining structures or parts of the same structure is required for structures having different total heights or storey heights and different dynamic characteristics. This is to avoid collision during an earthquake.

8.3.1.2 Minimum width of separation gaps as mentioned in **8.3.1.1**, shall be as specified in Table 13. The design seismic coefficient to be used shall be in accordance with **5** of Part 6 'Structural Design, Section 1 Loads, Forces and Effects' of the Code.

8.3.1.3 Where separation is necessary, a complete separation of the parts shall be made except below the plinth level. The plinth beams, foundation beams and footings may be continuous. Where separation sections are provided in a long building, they shall take care of movement owing to temperature changes also.

Table 13 Gap Width for Adjoining Structures

(*Clause* 8.3.1.2)

Sl. No.	Buildings Categories for Earthquake Resisting Features	Gap Width per Storey for Adjoining Masonry Building mm
(1)	(2)	(3)
i)	Frames with shear walls	15
ii)	Category B[1)]	10
iii)	Category C[1)]	10
iv)	Category D[1)]	15
v)	Category E[1)]	20

[1)] *See* Table 14.

NOTE — Minimum total gap shall be 25 mm. For any other value of A_h the gap width shall be determined proportionately.

8.3.2 *Separation or Crumple Section*

8.3.2.1 In case of framed construction, members shall be duplicated on either side of the separation or crumple section. As an alternative, in certain cases, such duplication may not be provided, if the portions on either side can act as cantilevers to take the weight of the building and other relevant loads.

8.3.2.2 Typical details of separation and crumple sections are shown in Fig. 17. For other types of joint details, reference may be made to good practice [6-4(6)].

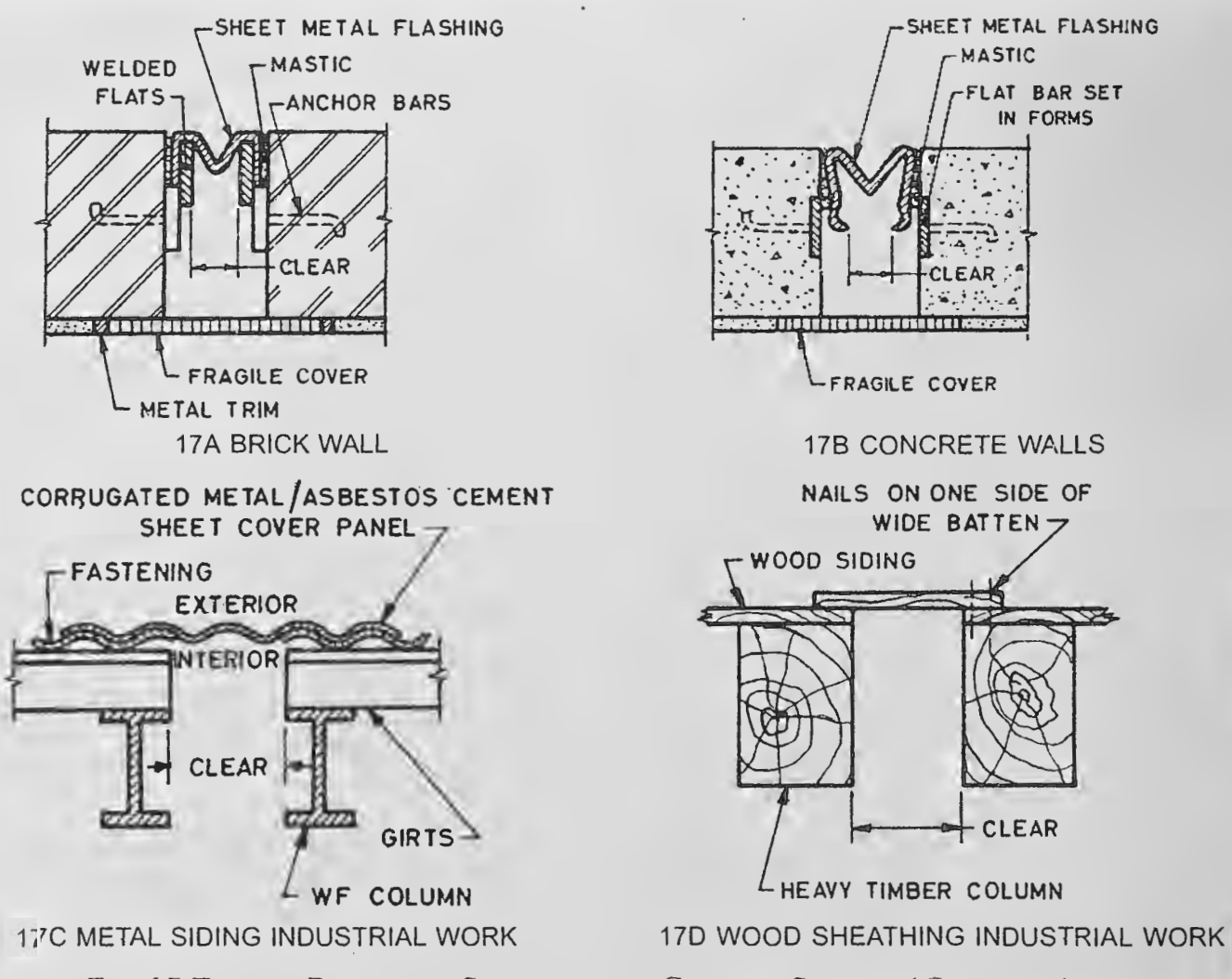

FIG. 17 TYPICAL DETAILS OF SEPARATION OR CRUMPLE SECTION (*CONTINUED*)

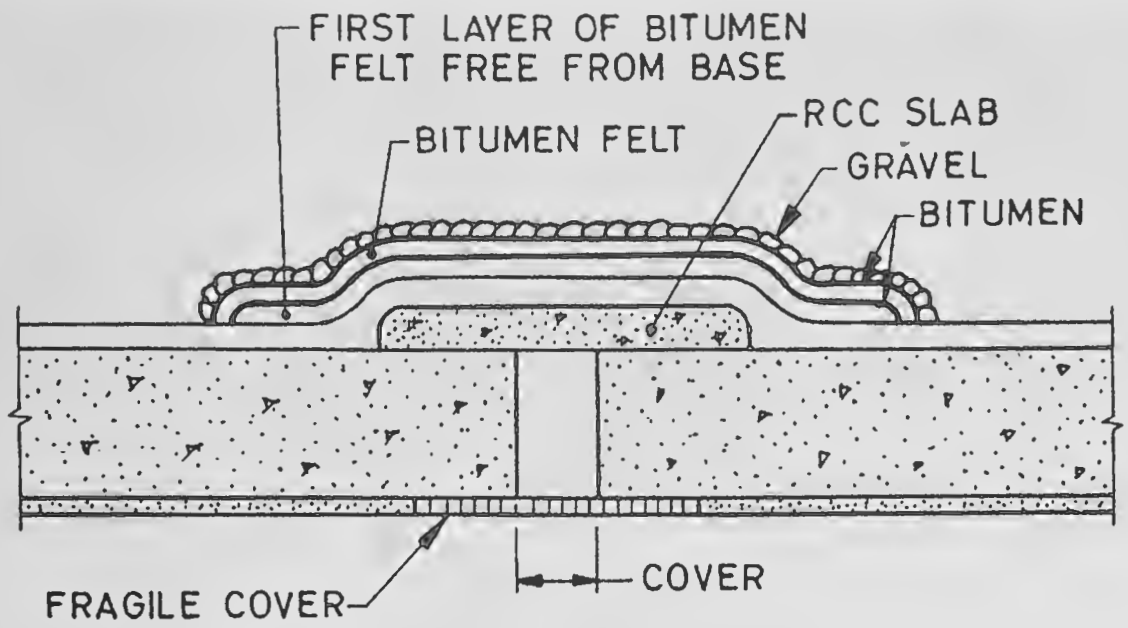

17E RCC SLAB ON ROOF SURFACE

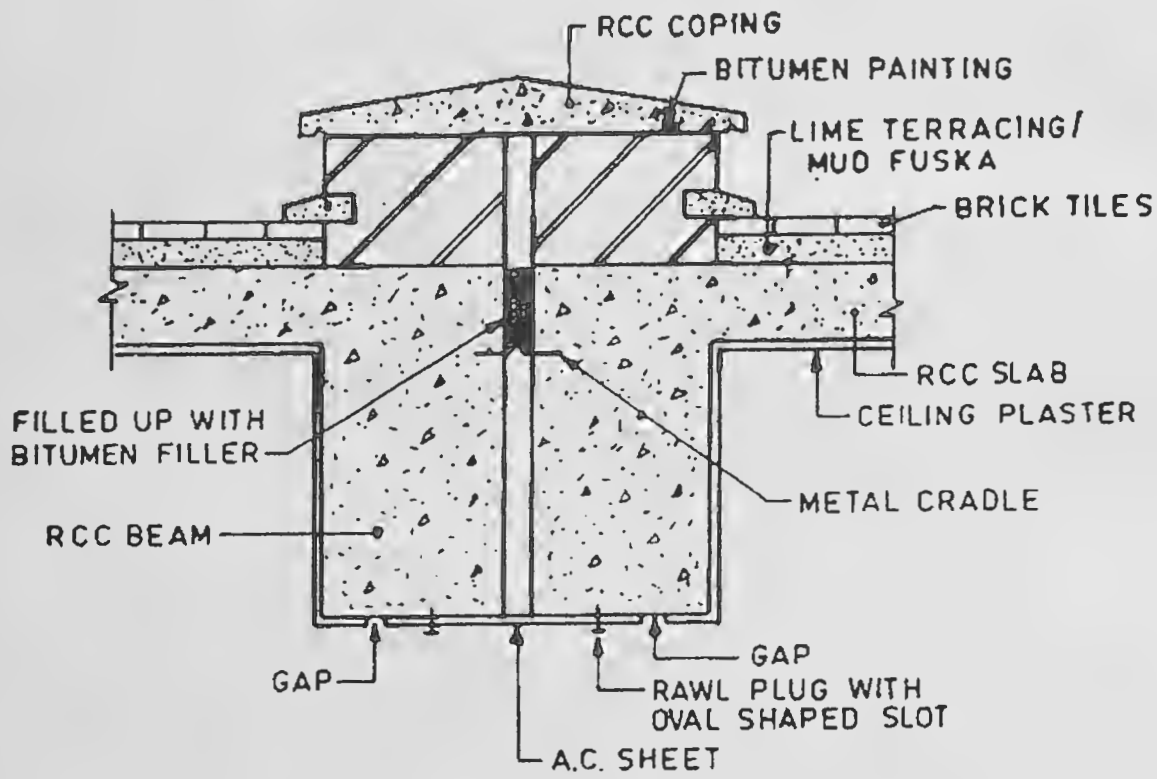

17F SEPARATION JOINT DETAILS AT ROOF

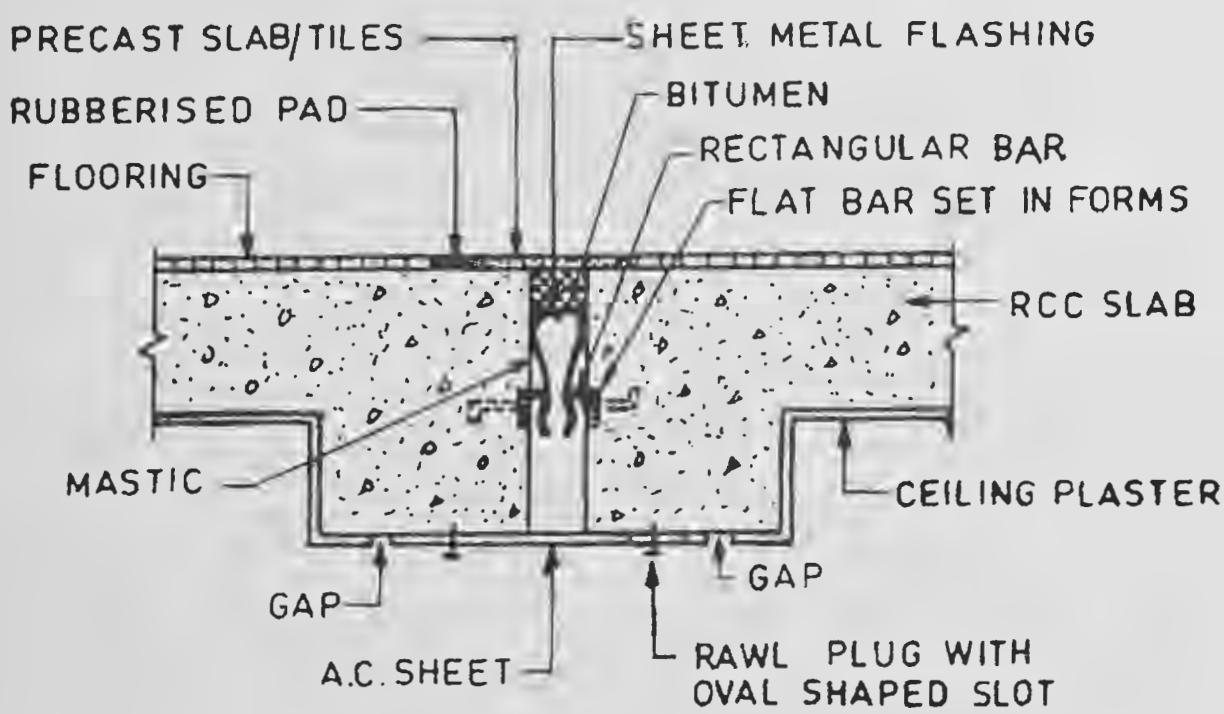

17G SEPARATION AT FLOOR LEVEL

NOTE — Fragile cover may consist of asbestos cement sheet, particle board and like.

FIG. 17 TYPICAL DETAILS OF SEPARATION OR CRUMPLE SECTION

8.3.3 *Foundations*

8.3.3.1 For the design of foundations, the provisions of Part 6 'Structural Design, Section 1 Loads, Forces and Effects' and Section 2 'Soils and Foundation' of the Code shall generally be followed.

8.3.3.2 The subgrade below the entire area of the building shall preferably be of the same type of the soil. Wherever this is not possible, a suitably located separation or crumple section shall be provided.

8.3.3.3 Loose fine sand, soft silt and expansive clays should be avoided. If unavoidable, the building shall rest either on a rigid raft foundation or on piles taken to a firm stratum. However, for light constructions the following measures may be taken to improve the soil on which the foundation of the building may rest:

a) Sand piling, and
b) Soil stabilization.

8.3.3.4 *Isolated footings for columns*

All the individual footings or pile caps where used in Type III Soft soils {Table 1 of good practice [6-4(9)]}, shall be connected by reinforced concrete ties at least in two directions approximately at right angles to each other. For buildings with no basement, the ties may be placed at or below the plinth level and for buildings with basement they may be placed at the level of basement floor. They shall need to be designed to carry the load of the panel walls also.

NOTE — The ties may not be necessary where structural floor connects the columns at or below thc plinth level.

8.3.3.4.1 Where ties are used, their sections shall be designed to carry in tension as well as in compression, an axial load not less than the earthquake force in the direction the tie acting on the heavier of the columns connected, but the sections shall not be less than 200 mm × 200 mm with M20 concrete reinforced with 4 bars of 12 mm diameter plain mild steel bars or 10 mm diameter high strength deformed bars, one at each corner, bound by 8 mm diameter stirrups not more than 150 mm apart.

NOTE — In working out the buckling strength of ties, the lateral support provided by the soil may be taken into account. Calculations show that for such buried ties, lateral buckling is not a problem and the full section of the tie may be taken effective as a short column.

8.3.3.4.2 In the case of reinforced concrete slab, the thickness shall not be less than 1/50th of the clear distance between the footings, but not less than 100 mm in any case. It shall be reinforced with not less than 0.15 percent mild steel bars or 0.12 percent high strength deformed bars in each direction placed symmetrically at top and bottom.

8.3.4 *Roofs and Floors*

8.3.4.1 Flat roof or floor shall not preferably be made of tiles of ordinary bricks supported on steel, timber or reinforced concrete joists, nor they shall be of a type which in the event of an earthquake is likely to be loosened and parts or all of which may fall. If this type of construction cannot be avoided, the joists should be blocked at ends and bridged at intervals such that their spacing is not altered during an earthquake.

8.3.4.1.1 For pitched roofs, corrugated iron or asbestos sheets shall be used in preference to country, Allahabad or Mangalore tiles or other loose roofing units. All roofing materials shall be properly tied to the supporting members. Heavy roofing materials shall generally be avoided.

8.3.4.2 *Pent roofs*

8.3.4.2.1 All roof trusses shall be supported on reinforced concrete or reinforced brick band (*see* **8.6.4.3**). The holding down bolts shall have adequate size and length as required for earthquake forces in accordance with **5** of Part 6 'Structural Design, Section 1 Loads, Forces and Effects' of the Code.

Where a trussed roof adjoins a masonry gable, the ends of the purlins shall be carried on and secured to a plate or bearer which shall be adequately bolted to reinforced concrete or reinforced brick band at the top of gable end masonry (*see* **8.6.4.4**).

NOTE — Hipped roof in general have shown better structural behaviour during earthquakes than gable ended roofs.

8.3.4.2.2 At tie level all the trusses and the gable end shall be provided with diagonal braces in plan so as to transmit the lateral shear due to earthquake force to the gable walls acting as shear walls at the ends as specified in **8.6.4**.

8.3.4.3 *Jack arches*

Jack arched roofs or floors, where used shall be provided with mild steel ties in all spans along with diagonal braces in plan to ensure diaphragms actions.

8.3.5 *Staircases*

8.3.5.1 The inter-connection of the stairs with the adjacent floors should be appropriately treated by providing sliding joints at the stairs to eliminate their bracing effect on the floors. Large stair halls shall preferably be separated from the rest of the building by means of separation or crumple sections.

8.3.5.2 Three types of stair construction may be adopted as described below:

a) *Separated staircases* — One end of the staircase rests on a wall and the other end is carried by columns and beams which have no

connection with the floors. The gap at the vertical joints between the floor and the staircase may be covered either with a tread plate attached to one side of the joint and sliding on the other side, or covered with some appropriate material which could crumple or fracture during an earthquake without causing structural damage. The supporting members. columns or walls, are isolated from the surrounding floors by means of separation or crumple sections. A typical example is shown in Fig. 18.

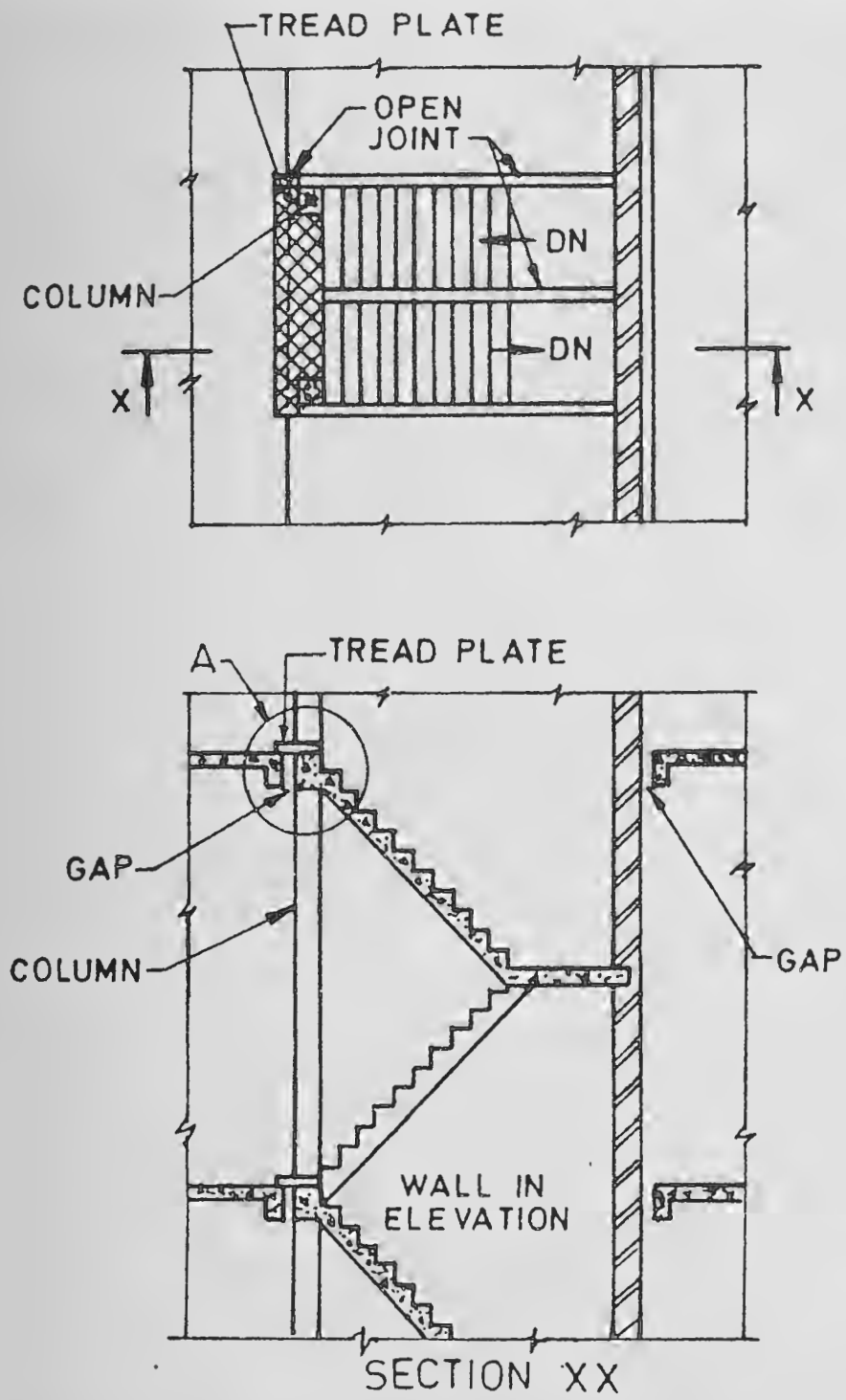

FIG. 18 SEPARATED STAIRCASE

b) *Built-in staircase* — When stairs are built monolithically with floors, they can be protected against damage by providing rigid walls at the stair opening. An arrangement, in which the staircase is enclosed by two walls, is given in Fig. 19. In such cases, the joints, as mentioned in respect of separated staircases, shall not be necessary.

The two walls mentioned above, enclosing the staircase, shall extend through the entire height of the stairs and to the building foundations.

c) *Staircases with sliding joints* — In case it is not possible to provide rigid walls around stair openings for built-in staircase or to adopt the separated staircases, the staircases shall have sliding joints so that they shall not act as diagonal bracing.

8.4 Types of Construction

8.4.1 The types of construction usually adopted in buildings are as follows:

a) Framed construction; and
b) Box type construction.

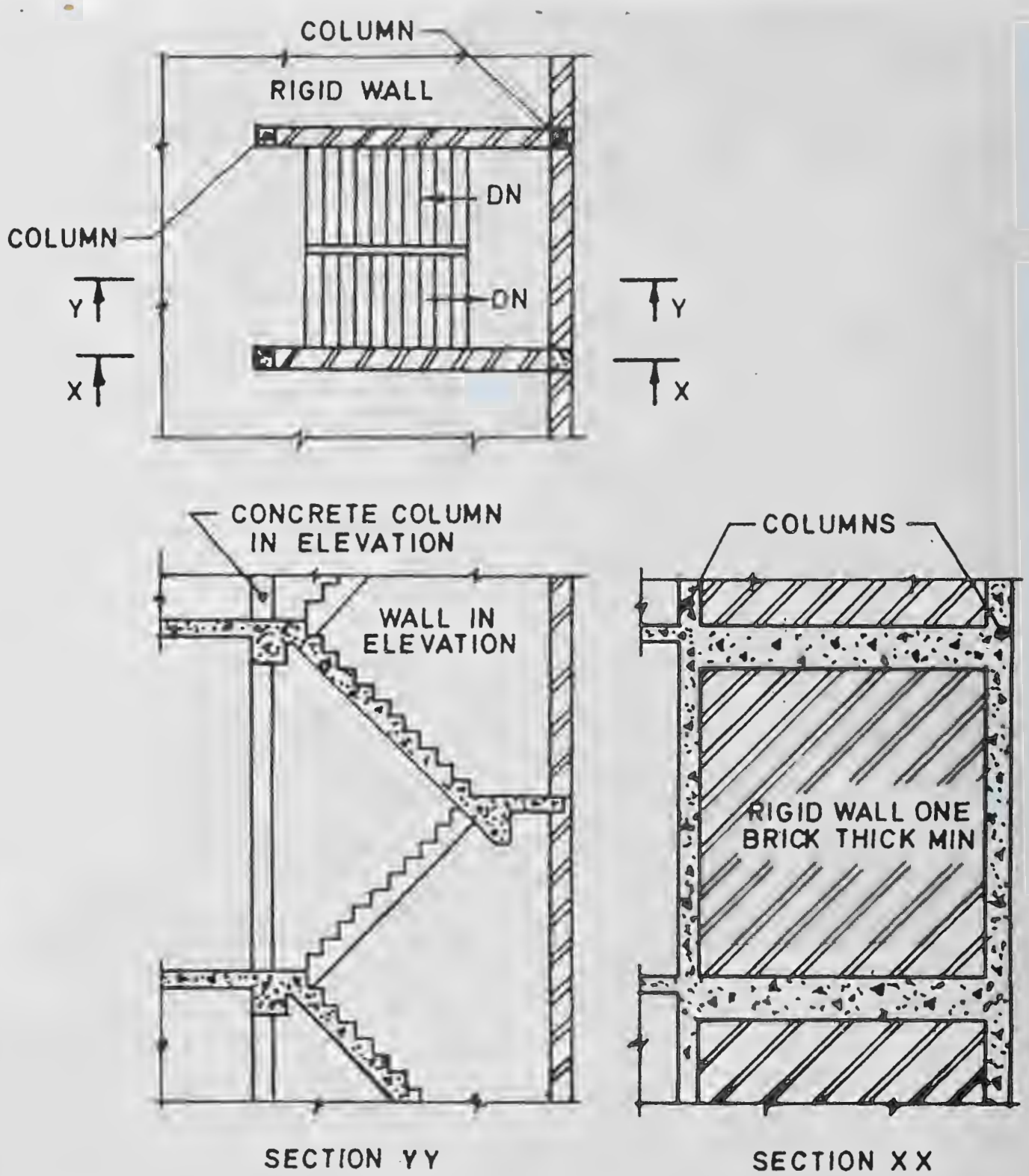

FIG. 19 RIGIDLY BUILT-IN STAIRCASE

8.4.2 *Framed Construction*

This type of construction is suitable for multi-storied and industrial buildings as described in **8.4.2.1** and **8.4.2.2**.

8.4.2.1 *Vertical load carrying frame construction*

This type of construction consists of frames with flexible (hinged) joints and bracing members. Steel multi-storied building or industrial frames and timber construction usually are of this type.

8.4.2.1.1 Such buildings shall be adequately strengthened against lateral forces by shear walls and/ or other bracing systems in plan, elevation and sections such that earthquake forces shall be resisted by them in any direction.

8.4.2.2 *Moment resistant frames with shear walls*

The frames may be of reinforced concrete or steel with semi-rigid or rigid joints. The walls are rigid capable of acting as shear walls and may be of reinforced concrete or of brickwork reinforced or unreinforced bounded by framing members through shear connectors.

8.4.2.2.1 The frame and wall combinations shall be designed to carry the total lateral force due to earthquake acting on the building. The frame acting alone shall be designed to resist at least 25 percent of the total lateral force.

8.4.2.2.2 The shear walls shall preferably be distributed evenly over the whole building. When concentrated at one location, forming what is called a rigid core in the building, the design shall be checked for torsional effects and the shear connection between the core and the floors conservatively designed for the total shear transfer.

8.4.2.2.3 The shear walls should extend from the foundation either to the top of the building or to a lesser height as required from design consideration. In design, the interaction between frame and the shear walls should be considered properly to satisfy compatibility and equilibrium conditions.

NOTE — Studies show that shear walls of height about 85 percent of total height of building are advantageous.

8.4.3 *Box Type Construction*

This type of construction consists of prefabricated or *in-situ* masonry, concrete or reinforced concrete walls along both the axes of the building. The walls support vertical loads and also act as shear walls for horizontal loads acting in any direction. All traditional masonry construction falls under this category. In prefabricated construction attention shall be paid to the connection between wall panels so that transfer of shear between them is ensured.

8.5 Categories of Buildings

8.5.1 For the purpose of specifying the earthquake resisting features in masonry and wooden buildings, the buildings have been categorized in four categories B to E based on the seismic zone and the importance of the building I,

where

I = Importance factor applicable to the building {as per good practice [6-4(9)]}.

8.5.1.1 The building categories are given in Table 14.

Table 14 Building Categories for Earthquake Resisting Features

(*Clause* 8.5.1.1)

Sl No.	Importance Factor	Seismic Zone			
		II	III	IV	V
(1)	(2)	(3)	(4)	(5)	(6)
i)	1.0	B	C	D	E
ii)	1.5	C	D	E	E

NOTE — Category A is now defunct as Seismic Zone I does not exist any more.

8.6 Masonry Construction with Rectangular Masonry Units

8.6.1 The design and construction of masonry walls using rectangular masonry units in general shall be governed by 3 to 7 of this Section and good practice [6-4(5)].

8.6.1.1 *Masonry units*

8.6.1.1.1 Well burnt bricks conforming to accepted standard [6-4(12)] or solid concrete blocks conforming to accepted standard [6-4(13)] and having a crushing strength not less than 3.5 MPa shall be used. The strength of masonry unit required shall depend upon number of storeys and thickness of walls (*see* 3 to 6).

8.6.1.1.2 Squared stone masonry, stone block masonry or hollow concrete block masonry, as specified in the good practice [6-4(14)] of adequate strength, may also be used.

8.6.1.2 *Mortar*

8.6.1.2.1 Mortars, such as those given in Table 15 or of equivalent specification, shall preferably be used for masonry construction for various categories of buildings.

8.6.1.2.2 Where steel reinforcing bars are provided in masonry, the bars shall be embedded with adequate cover in cement sand mortar not leaner than 1 : 3 (minimum clear cover 10 mm) or in cement concrete of grade M20 (minimum clear cover 15 mm or bar diameter whichever is more), so as to achieve good bond and corrosion resistance.

8.6.2 *Walls*

8.6.2.1 Masonry bearing walls built in mortar, as specified in **8.6.1.2.1** unless rationally designed as reinforced masonry shall not be built of greater height than 15 m subject to a maximum of four storeys when measured from the mean ground level to the roof slab or ridge level. The masonry bearing walls shall be reinforced in accordance with **8.6.4.1**.

8.6.2.2 The bearing walls in both directions shall be straight and symmetrical in plan as far as possible.

8.6.2.3 The wall panels formed between cross walls and floors or roof shall be checked for their strength in bending as a plate or as a vertical strip subjected to the earthquake force acting on its own mass.

NOTE — For panel walls of 200 mm or larger thickness having a storey height not more than 3.5 m and laterally supported at the top, this check need not be exercised.

8.6.2.4 *Masonry bond*

For achieving full strength of masonry, the usual bonds specified for masonry should be followed so that the vertical joints are broken properly from course to course. To obtain full bond between perpendicular walls, it is necessary to make a slopping (stepped) joint by making the corners first to a height of 600 mm and then building the wall in between them. Otherwise, the

Table 15 Recommended Mortar Mixes

(*Clauses* 8.6.1.2.1 *and* 8.6.2.6)

Sl No.	Building Category	Grade of Mortar	Minimum Compressive Strength at 28 Days N/mm²
(1)	(2)	(3)	(4)
i)	E	H1	10
		H2	6.0
ii)	D	M1	5.0
		M2	3.0
iii)	C	M2	3.0
iv)	B	M3	1.5

NOTE — *See* Table 1 and Table 2 for more details.

toothed joint should be made in both the walls alternatively in lifts of about 450 mm (*see* Fig. 20).

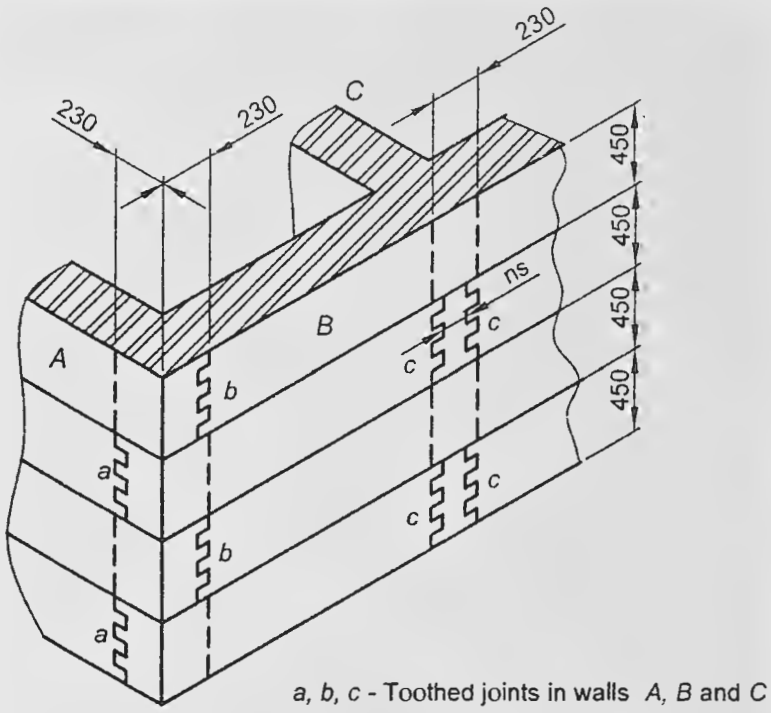

FIG. 20 ALTERNATING TOOTHED JOINTS IN WALLS AT CORNER AND T-JUNCTION

8.6.2.5 Ignoring tensile strength, free standing walls shall be checked against overturning under the action of design seismic coefficient α_h allowing for a factor safety of 1.5.

8.6.2.6 Panel or filler walls in framed buildings shall be properly bonded to surrounding framing members by means of suitable mortar (*see* Table 15) or connected through dowels. If the walls are so bonded they shall be checked according to **8.6.2.3** otherwise as in **8.6.2.5**.

8.6.3 *Openings in Bearing Walls*

8.6.3.1 Door and window openings in walls reduce their lateral load resistance and hence, should preferably be small and more centrally located. The guidelines on the size and position of opening are given in Table 16 and Fig. 21.

Table 16 Size and Position of Openings in Bearing Walls

(*Clause* 8.6.3.1)

Sl No.	Position of Opening	Details of Opening for Building Category		
		B	C	D and E
(1)	(2)	(3)	(4)	(5)
i)	Distance b_5 from the inside corner of outside wall, mm, *Min*	0	230	450
ii)	For total length of openings, the ratio $(b_1 + b_2 + b_3)/l_1$ or $(b_6 + b_7)/l_2$ shall not exceed,			
	a) one-storeyed building	0.60	0.55	0.50
	b) two-storeyed building	0.50	0.46	0.42
	c) 3 or 4 storeyed building	0.42	0.37	0.33
iii)	Pier width between consecutive openings b_4, mm, *Min*	340	450	560
iv)	Vertical distance between two openings one above the other h_3, mm, *Min*	600	600	600
v)	Width of opening of ventilator b_8, mm, *Max*	900	900	900

NOTE — Four storeys buildings not allowed in Category

8.6.3.2 Openings in any storey shall preferably have their top at the same level so that a continuous band could be provided over them, including the lintels throughout the building.

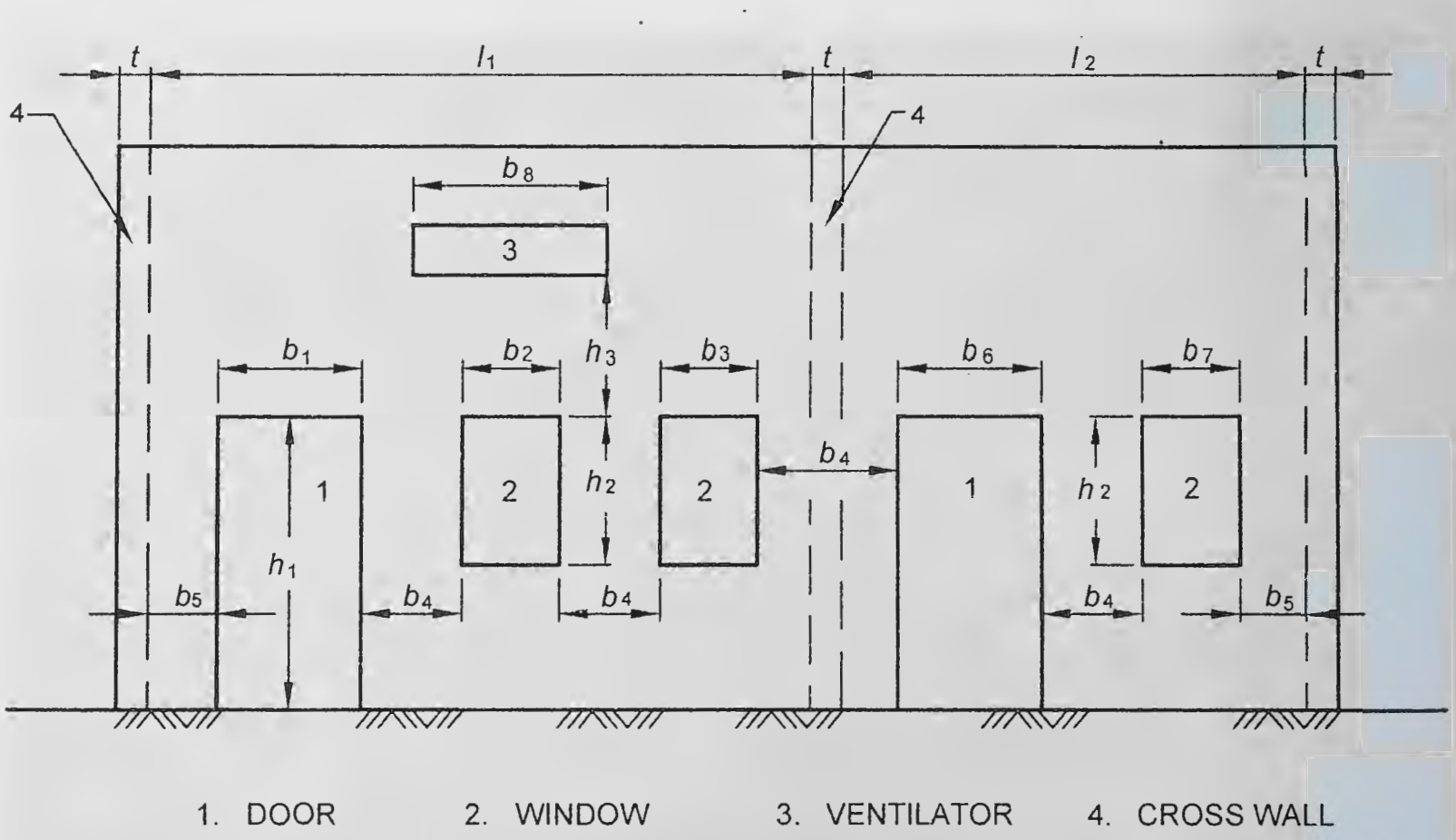

FIG. 21 RECOMMENDED DIMENSIONS OF OPENINGS AND PIERS (*SEE* TABLE 16)

8.6.3.3 Where openings do not comply with the guidelines of Table 15, they should be strengthened by providing reinforced concrete or reinforcing the brickwork, as shown in Fig. 22 with high strength deformed (HSD) bars of 8 mm diameter but the quantity of steel shall be increased at the jambs to comply with **8.6.4.9**, if so required.

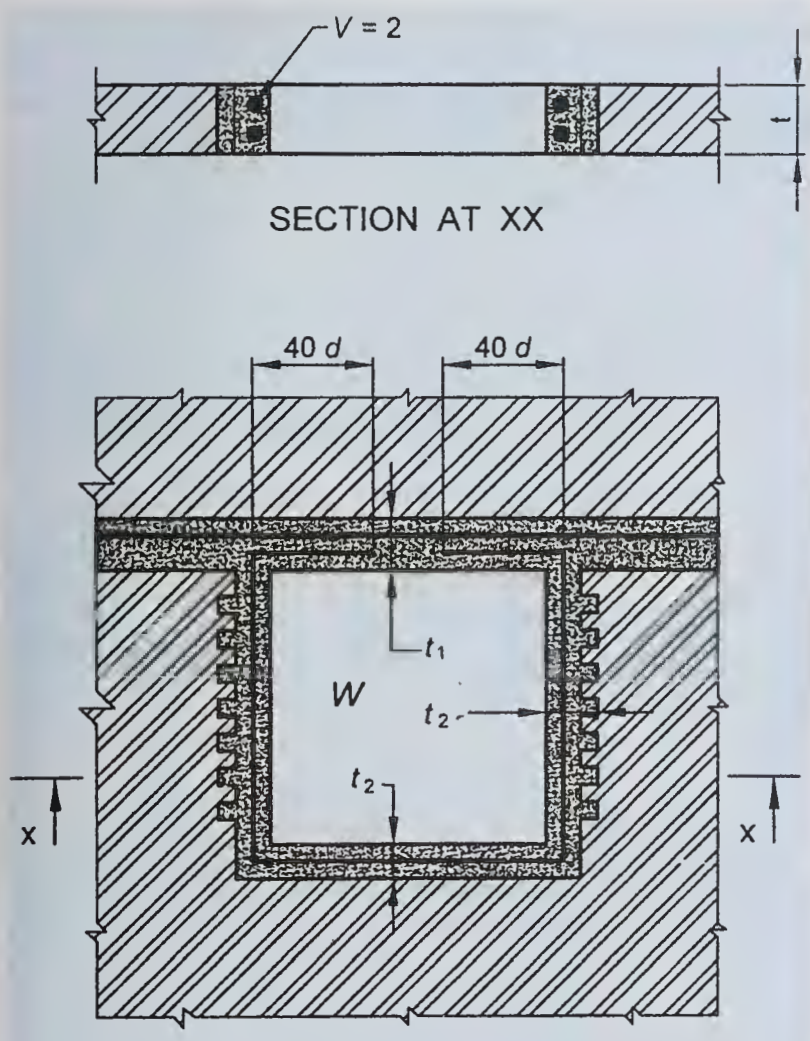

W = WINDOW
t = WALL THICKNESS
t_1 = LINTEL THICKNESS
t_2 = THICKNESS OF CONCRETE IN JAMB
V = VERTICAL BAR
d = DIAMETER OF REINFORCING BARS

FIG. 22 STRENGTHENING MASONRY AROUND OPENINGS

8.6.3.4 If a window or ventilator is to be projected out, the projection shall be in reinforced masonry or concrete and well anchored.

8.6.3.5 If an opening is tall from bottom to almost top of a storey, thus dividing the wall into two portions, these portions shall be reinforced with horizontal reinforcement of 6 mm diameter bars at not more than 450 mm intervals, one on inner and one on outer face, properly tied to vertical steel at jambs, corners or junction of walls, where used.

8.6.3.6 The use of arches to span over the openings is a source of weakness and shall be avoided. Otherwise, steel ties should be provided.

8.6.4 *Seismic Strengthening Arrangements*

8.6.4.1 All masonry buildings shall be strengthened by the methods, as specified for various categories of buildings, as listed in Table 17, and detailed in subsequent clauses. Figures 23 and 24 show. schematically, the overall strengthening arrangements to be adopted for category D and E buildings which consist of horizontal bands of reinforcement at critical levels, vertical reinforcing bars at corners, junctions of walls and jambs of openings.

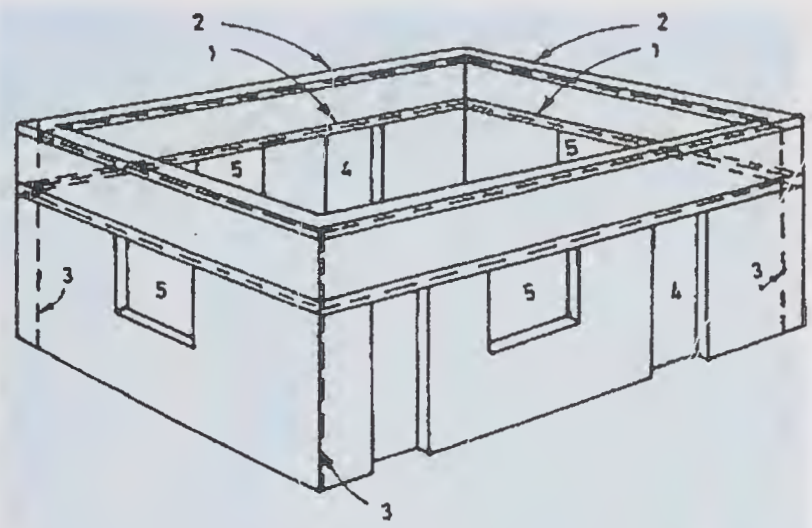

1 — LINTEL BAND
2 — ROOF/FLOOR BAND
3 — VERTICAL BAR
4 — DOOR
5 — WINDOW

FIG. 23 OVERALL ARRANGEMENT OF REINFORCING LOW STRENGTH MASONRY BUILDINGS

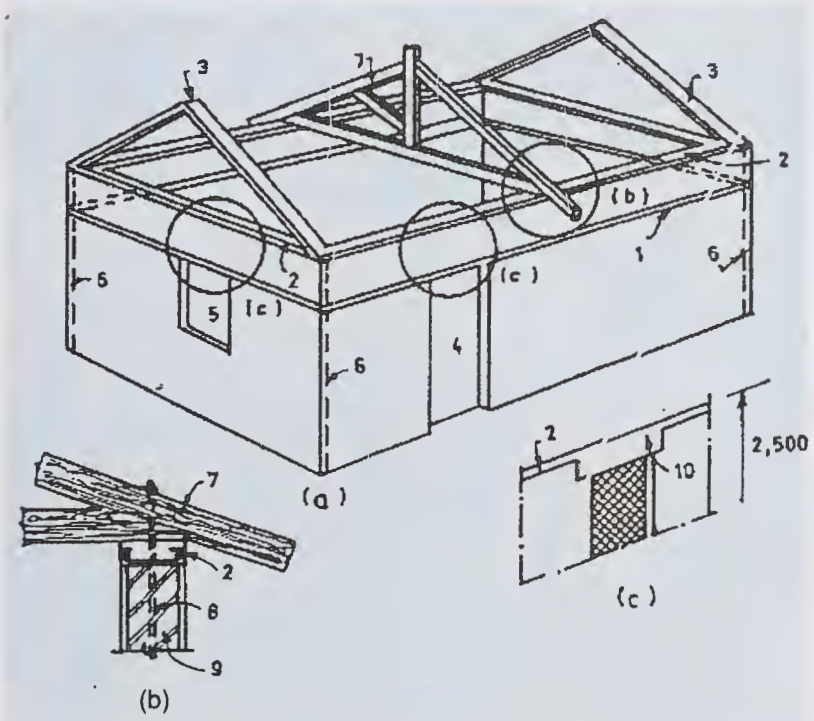

1 — LINTEL BAND
2 — EAVES LEVEL (ROOF) BAND
3 — GABLE BAND
4 — DOOR
5 — WINDOW
6 — VERTICAL STEEL BAR
7 — RAFTER
8 — HOLDING DOWN BOLT
9 — BRICK/STONE WALL
10 — DOOR LINTEL INTEGRATED WITH ROOF BAND:
a) PERSPECTIVE VIEW
b) DETAILS OF TRUSS CONNECTION WITH WALL
c) DETAIL OF INTEGRATING DOOR LINTEL WITH ROOF BAND

FIG. 24 OVERALL ARRANGEMENT OF REINFORCING LOW STRENGTH MASONRY BUILDING HAVING PITCHED ROOF

8.6.4.2 Lintel band is a band (*see* **8.1.6**) provided at lintel level on all load bearing internal, external longitudinal and cross walls. The specifications of the band are given in **8.6.4.5**.

NOTE — Lintel band, if provided in panel or partition walls also shall improve their stability during severe earthquake.

8.6.4.3 Roof band is a band (*see* **8.1.6**) provided immediately below the roof or floors. The specifications of the band are given in **8.6.4.5**. Such a band need not be provided underneath reinforced concrete or brickwork slabs resting on bearing walls, provided that the slabs are continuous over the intermediate wall up to the crumple sections, if any, and cover the width of end walls, fully or at least ¾ of the wall thickness.

Table 17 Strengthening Arrangements Recommended for Masonry Buildings (Rectangular Masonry Units)

(*Clause* 8.6.4.1)

Sl No. (1)	Building Category (2)	Number of Storeys (3)	Strengthening to be Provided in All Storeys (4)
i)	B	1) 1 to 3	a, b, c, f, g
		2) 4	a, b, c, d, f, g
ii)	C	1) 1 and 2	a, b, c, f, g
		2) 3 and 4	a to g
iii)	D	1) 1 and 2	a to g
		2) 3 and 4	a to h
iv)	E	1 to 3[1)]	a to h

[1)] 4th storey not allowed in category E.

where

a = masonry mortar (*see* **8.6.1.2**);

b = lintel band (*see* **8.6.4.2**);

c = roof band and gable band where necessary (*see* **8.6.4.3** and **8.6.4.4**);

d = vertical steel at corners and junctions of walls (*see* **8.6.4.8**);

e = vertical steel at jambs of openings (*see* **8.6.4.9**);

f = bracing in plan at tie level of roofs (*see* **8.3.4.2.2**);

g = plinth band where necessary (*see* **8.6.4.6**); and

h = dowel bars (*see* **8.6.4.7**).

NOTE — In case of four storey buildings of category B, the requirements of vertical steel may be checked through a seismic analysis using a design seismic co-efficient equal to four times the one given in 5 of Part 6 'Structural Design, Section 1 Loads, Forces and Effects' of the Code (this is because the brittle behaviour of masonry in the absence of a vertical steel results in much higher effective seismic force than that envisaged in the seismic coefficient, provided in the Code). If this analysis shows that vertical steel is not required the designer may take the decision accordingly.

8.6.4.4 Gable band is a band provided at the top of gable masonry below the purlins. The specifications of the band are given in **8.6.4.5**. This band shall be made continuous with the roof band at the eaves level.

8.6.4.5 *Section and reinforcement of band*

The band shall be made of reinforced concrete of grade not leaner than M20 or reinforced brickwork in cement mortar not leaner than 1 : 3 (H1). The bands shall be of the full width of the wall not less than 75 mm in depth and reinforced with steel, as indicated in Table 18.

NOTE — In coastal areas, the concrete grade shall be M30 concrete and the filling mortar of 1 : 3 (H1) (cement-sand with water proofing admixture).

Table 18 Recommended Longitudinal Steel in Reinforced Concrete Bands

(*Clause* 8.6.4.5)

Sl No.	Span m	Building Category B		Building Category C		Building Category D		Building Category E	
		No. of Bars	Dia mm	No. of Bars	Dia mm	No. of Bars	Dia mm	No. of Bars	Dia mm
(1)	(2)	(3)	(4)	(5)	(6)	(7)	(8)	(9)	(10)
i)	5 or less	2	8	2	8	2	8	2	10
ii)	6	2	8	2	8	2	10	2	12
iii)	7	2	8	2	10	2	12	4	10
iv)	8	2	10	2	12	4	10	4	12

NOTES

1 Span of wall shall be the distance between centre lines of its cross walls or buttresses. For spans greater than 8 m, it shall be desirable to insert pilasters or buttresses to reduce the span or special calculation shall be made to determine the strength of wall and section of band.

2 The number and diameter of bars given above pertain to high strength deformed bars.

3 Width of R.C. band is assumed same as the thickness of the wall. Wall thickness shall be 200 mm minimum. A clear cover of 20 mm from face of wall shall be maintained.

4 The vertical thickness of R.C. band be kept 75 mm minimum, where two longitudinal bars are specified, one on each face; and 150 mm, where four bars are specified.

5 Concrete mix shall be of grade M20 of good practice [6-4(10)].

6 The longitudinal steel bars shall be held in position by steel links or stirrups 6 mm diameter spaced at 150 mm apart.

8.6.4.5.1 In case of reinforced brickwork, the thickness of joints containing steel bars shall be increased so as to have a minimum mortar cover of 15 mm around the bar. In bands of reinforced brickwork the area of steel provided shall not be less than either as per **10.7.2.2** or specified above for reinforced concrete bands.

8.6.4.5.2 For full integrity of walls at corners and junctions of walls and effective horizontal bending resistance of bands continuity of reinforcement is essential. The details as shown in Fig. 25 are recommended.

8.6.4.6 Plinth band is a band provided at plinth level of walls on top of the foundation wall. This is to be provided where strip footings of masonry (other than

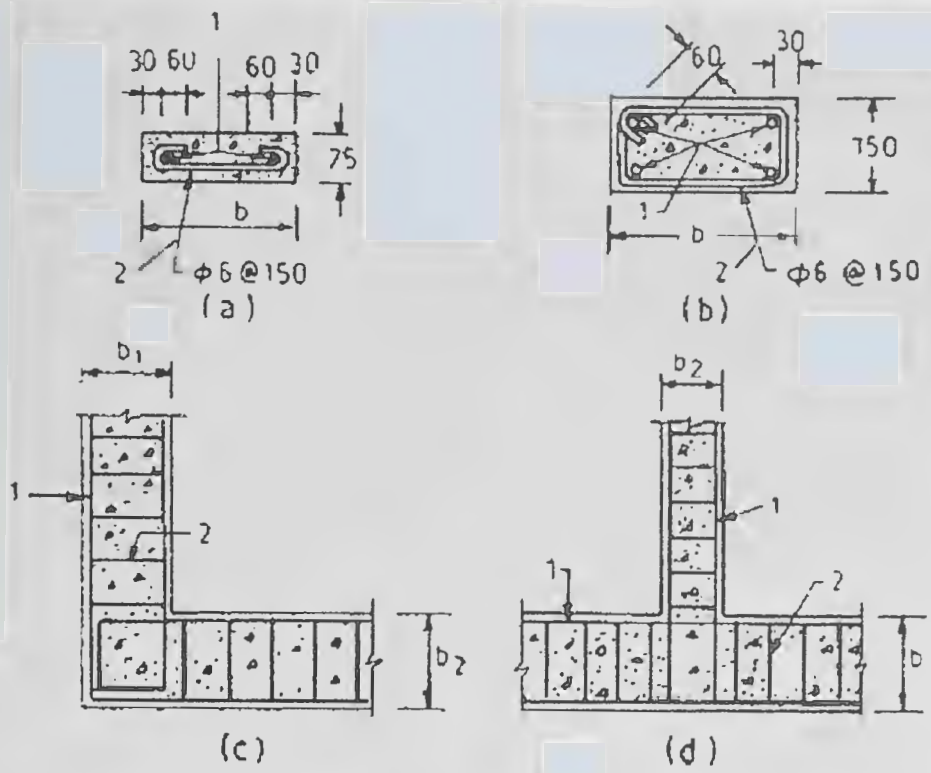

1 — LONGITUDINAL BARS
2 — LATERAL TIES
b_1, b_2 — WALL THICKNESS

a) SECTION OF BAND WITH TWO BARS
b) SECTION OF BAND WITH FOUR BARS
c) STRUCTURAL PLAN AT CORNER JUNCTION
d) SECTION PLAN AT T-JUNCTION OF WALLS

All dimensions in millimetres.

FIG. 25 REINFORCEMENT AND BENDING DETAIL IN R.C. BAND

reinforced concrete or reinforced masonry) are used and the soil is either soft or uneven in its properties, as frequently happens in hill tracts. Where used, its section may be kept same as in **8.6.4.5**. This band shall serve as damp proof course as well.

8.6.4.7 In category D and E buildings, to further enhance the box action of walls, steel dowel bars may be used at corners and T-junctions of walls at the sill level of windows to length of 900 mm from the inside corner in each wall. Such dowel may be in the form of U stirrups 8 mm diameter. Where used, such bars shall be laid in 1 : 3 cement-sand-mortar with a minimum clear cover of 20 mm on all sides to minimise corrosion.

8.6.4.8 *Vertical reinforcement*

Vertical steel at corners and junctions of walls, which are up to 340 mm (1½ brick) thick, shall be provided as specified in Table 19. For walls thicker than 340 mm the area of the bars shall be proportionately increased. For earthquake resistant framed wall construction, *see* **8.6.5**.

8.6.4.8.1 The vertical reinforcement shall be properly embedded in the plinth masonry of foundations and roof slab or roof band so as to develop its tensile strength in bond. It shall be passing through the lintel bands and floor slabs or floor level bands in all storeys.

Bars in different storeys may be welded {*see* good practices [6-4(15)] and [6-4(16)], as relevant} or suitably lapped.

NOTE — Typical details of providing vertical steel in brickwork masonry with rectangular solid units at corners and T-junctions are shown in Fig. 26.

8.6.4.9 Vertical reinforcement at jambs of window and door openings shall be provided as per Table 19. It

Table 19 Vertical Steel Reinforcement in Masonry Walls with Rectangular Masonry Units

(*Clause* 8.6.4.8)

Sl No.	No. of Storeys	Storey	Diameter of HSD Single Bar at Each Critical Section mm			
			Category B	Category C	Category D	Category E
(1)	(2)	(3)	(4)	(5)	(6)	(7)
i)	One	—	Nil	Nil	10	12
ii)	Two	a) Top	Nil	Nil	10	12
		b) Bottom	Nil	Nil	12	16
iii)	Three	a) Top	Nil	10	10	12
		b) Middle	Nil	10	12	16
		c) Bottom	Nil	12	12	16
iv)	Four	a) Top	10	10	10	Four storied building not permitted
		b) Third	10	10	12	
		c) Second	10	12	16	
		d) Bottom	12	12	20	

NOTES

1 The diameters given above are for HSD bars.

2 The vertical bars shall be covered with concrete M20 or mortar 1:3 grade in suitably created pockets around the bars (*see* Fig. 26). This shall ensure their safety from corrosion and good bond with masonry.

3 In case of floors/roofs with small precast components, *see also* **8.7.2.3** for floor/roof band details.

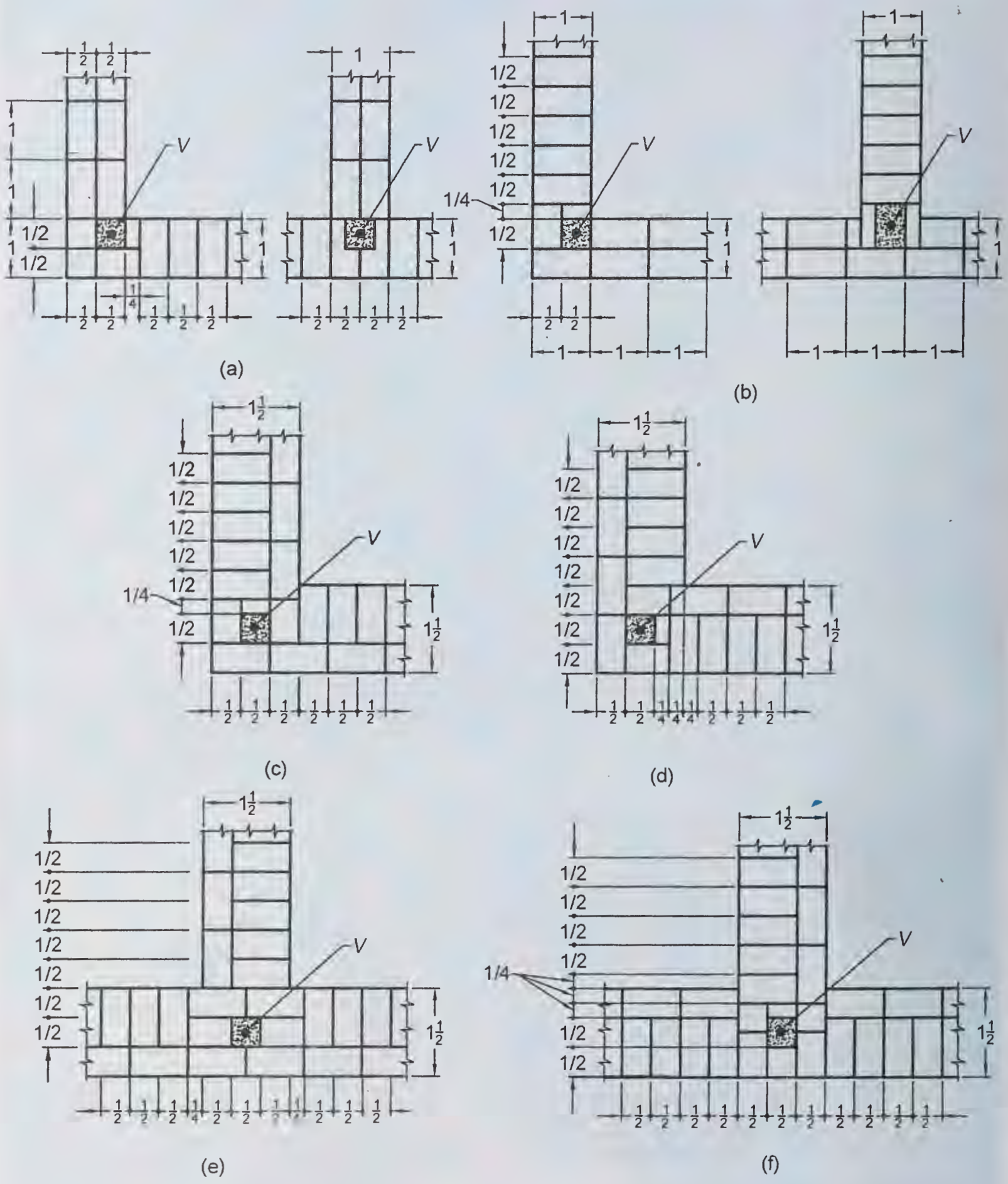

1- One-brick length , $\frac{1}{2}$ - Half - brick length , *V* - Vertical steel bar with mortar/ concrete filling in pocket

(a) and (b) - Alternate courses in one brick

(c) and (d) - Alternate courses at corner junction of $1\frac{1}{2}$ - brick wall

(e) and (f) - Alternate courses at T- junction of $1\frac{1}{2}$ - brick wall

FIG. 26 TYPICAL DETAILS OF PROVIDING VERTICAL STEEL BARS IN BRICK MASONRY

may start from foundation of floor and terminate in lintel band (*see* Fig. 22).

8.6.5 *Framing of Thin Load Bearing Walls* (*see* Fig. 27)

Load bearing walls can be made thinner than 200 mm say 150 mm inclusive of plastering on both sides. Reinforced concrete framing columns and collar beams shall be necessary to be constructed to have full bond with the walls. Columns are to be located at all corners and junctions of walls and spaced not more than 1.5 m apart but so located as to frame up the doors and windows. The horizontal bands or ring beams are located at all floors, roof as well as lintel levels of the openings. The sequence of construction between walls and columns shall be first to build the wall up to 4 to 6 courses height leaving toothed gaps (tooth projection being about 40 mm only) for the columns and second to pour M20 (1 : 1½ : 3) concrete to fill the columns against the walls using wood forms only on two sides. The columns steel should be accurately held in position all along. The band concrete should be cast on the wall masonry directly so as to develop full bond with it.

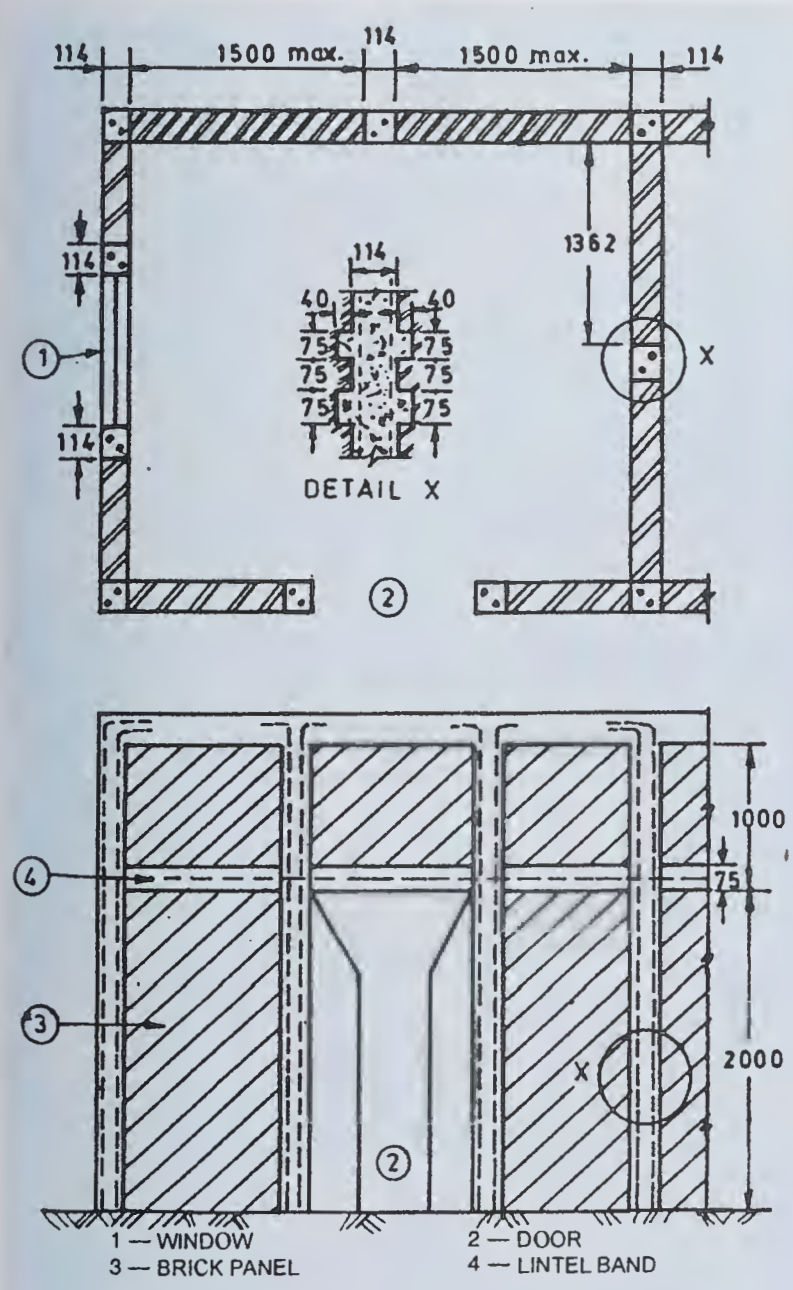

All dimensions in millimetres.

NOTES

1 Detailing of steel around the window openings will be same as for door openings with additional 75 mm band at sill level.

2 Figures are for just explanation purposes and the same shall not be used as design guide.

FIG. 27 FRAMING OF THIN LOAD-BEARING BRICK WALL

Such construction may be limited to only two storeys maximum in view of its vertical load carrying capacity. The horizontal length of walls between cross walls shall be restricted to 7 m and the storey height to 3 m.

8.6.6 *Reinforcing Details for Hollow Block Masonry*

The following details may be followed in placing the horizontal and vertical steel in hollow block masonry using cement-sand or cement-concrete blocks.

8.6.6.1 *Horizontal band*

U-shaped blocks may be used for construction of horizontal bands at various levels of the storeys as shown in Fig. 28, where the amount of horizontal reinforcement shall be taken 25 percent more than that given in Table 18 and provided by using four bars and 6 mm diameter stirrups. Other continuity details shall be followed, as shown in Fig. 25.

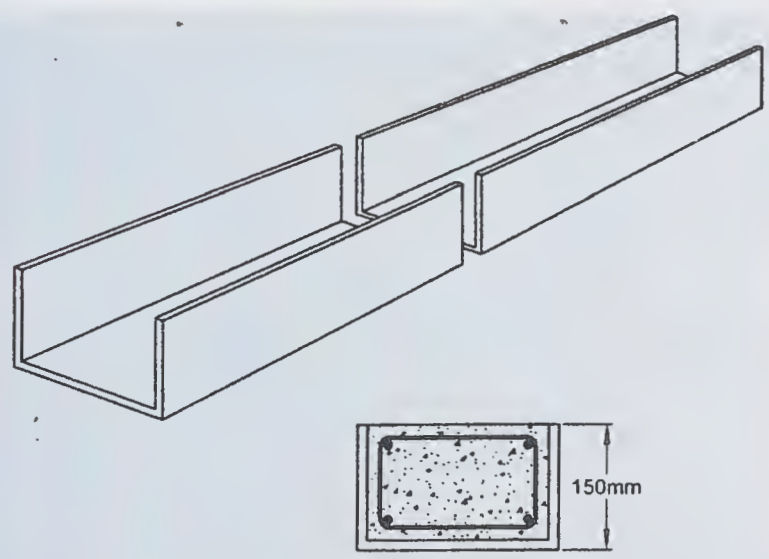

FIG. 28 U-BLOCKS FOR HORIZONTAL BANDS

8.6.6.2 *Vertical reinforcement*

Bars, as specified in Table 19 shall be located inside the cavities of the hollow blocks, one bar in each cavity (*see* Fig. 29). Where more than one bar is planned these can be located in two or three consecutive cavities. The cavities containing bars are to be filled by using micro-concrete 1 : 2 : 3 or cement coarse sand mortar 1 : 3, and properly rodded for compaction. The vertical bars should be spliced by welding or overlapping for developing full tensile strength. For proper bonding, the overlapped bars should be tied together by winding the binding wire over the lapped length. To reduce the number of overlaps, the blocks may be made U-shaped as shown in Fig. 29 which shall avoid lifting and threading of bars into the hollows.

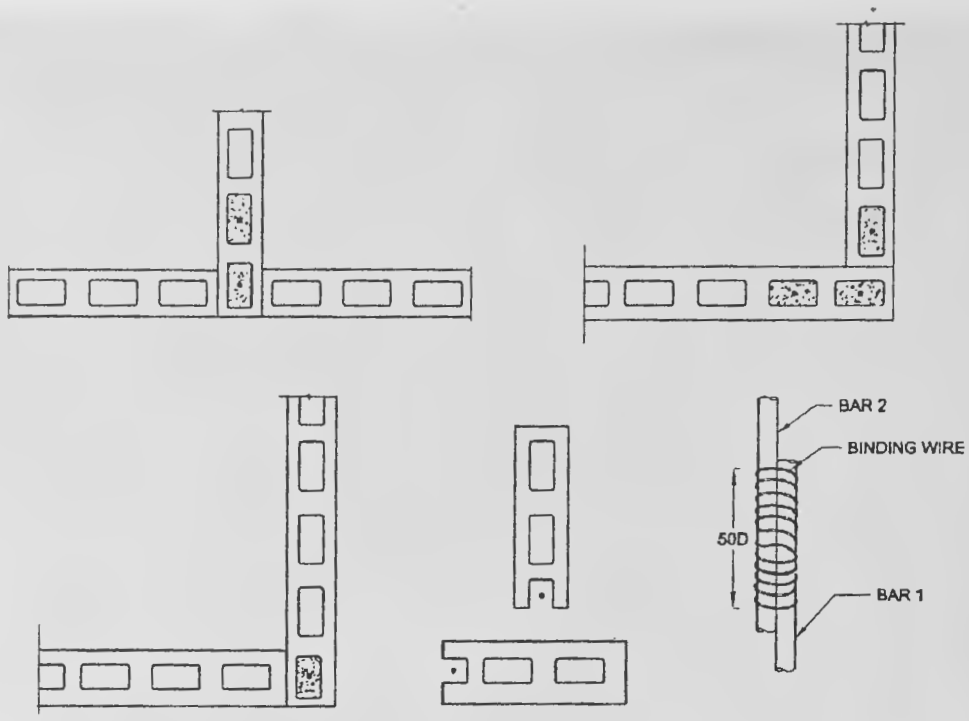

NOTE—OVERLAPPING OF VERTICAL REINFORCEMENT = 50D, AND D = DIAMETER OF THE REINFORCEMENT.

FIG. 29 VERTICAL REINFORCEMENT IN CAVITIES

8.7 Floors/Roofs with Small Precast Components

8.7.1 *Types of Precast Floors/Roofs*

Earthquake resistance measures for floors and roofs with small precast components, as covered in this Section, have been dealt with as typical examples.

8.7.1.1 *Precast reinforced concrete unit roof/floor*

The unit is a precast reinforced concrete component, channel (inverted trough) shaped in section (*see* Fig. 30). The nominal width of the unit varies from 300 to 600 mm, its height from 150 to 200 mm and a minimum flange thickness of 30 mm. Length of unit shall vary according to room dimensions, but the maximum length is restricted to 4.2 m from stiffness considerations. Horizontal corrugations are provided on the two longitudinal faces of the units so that the structural roof/floor acts monolithic after concrete grouted in the joints between the units attains strength (*see* Fig. 31).

8.7.1.2 *Precast reinforced concrete cored unit roof/floor*

The unit is a reinforced concrete component having a nominal width of 300 to 600 mm and thickness of 130 to 150 mm having two circular hollows 90 mm diameter, throughout the length of the unit (*see* Fig. 32). The minimum flange/web thickness of the unit shall be 20 mm. Length of unit varies according to room dimensions, but the maximum length shall be restricted to 4.2 m from stiffness considerations. Horizontal corrugations are provided on the two longitudinal faces of the units so that the structural roof/floor acts monolithic after concrete grouted in the joints between the units attains strength (*see* Fig. 33).

8.7.1.3 *Precast reinforced concrete plank and joist scheme for roof/floor*

The scheme consists of precast reinforced concrete planks supported on partially precast reinforced concrete joists. The reinforced concrete planks are 300 mm wide and the length varies according to the spacing of the joists, but it shall not exceed 1.5 m (*see* Fig. 34). To provide monolithic property to the roof/floor and to have T-beam effect with the joists, the planks shall be made partially 30 mm thick and the partially 60 mm thick and *in-situ* concrete shall be filled in the depressed portions to complete the roof/floor structurally (*see* Fig. 35).

8.7.1.4 *Prefabricated brick panel system for roof/floor*

It consists of prefabricated reinforced brick panels (*see* Fig. 36) supported on Precast reinforced concrete joists with nominal reinforced 35 mm thick structural deck concrete over the brick panels and joists (*see* Fig. 37). The width of the brick panels shall be 530 mm for panels made of bricks of conventional size and 450 mm for panels made of bricks of modular size. The thickness of the panels shall be 75 mm or 90 mm, respectively depending upon whether conventional or modular bricks are used. The length of the panels shall vary depending upon the spacing of the joists, but the maximum length shall not exceed 1.2 m.

8.7.1.5 *Precast reinforced concrete waffle unit roof/floor*

Waffle units are of the shape of inverted troughs, square or rectangular in plan, having lateral dimensions up to 1.2 m and depth depending upon the span of the roof/floor to be covered (*see* Fig. 38 and Fig. 39). The

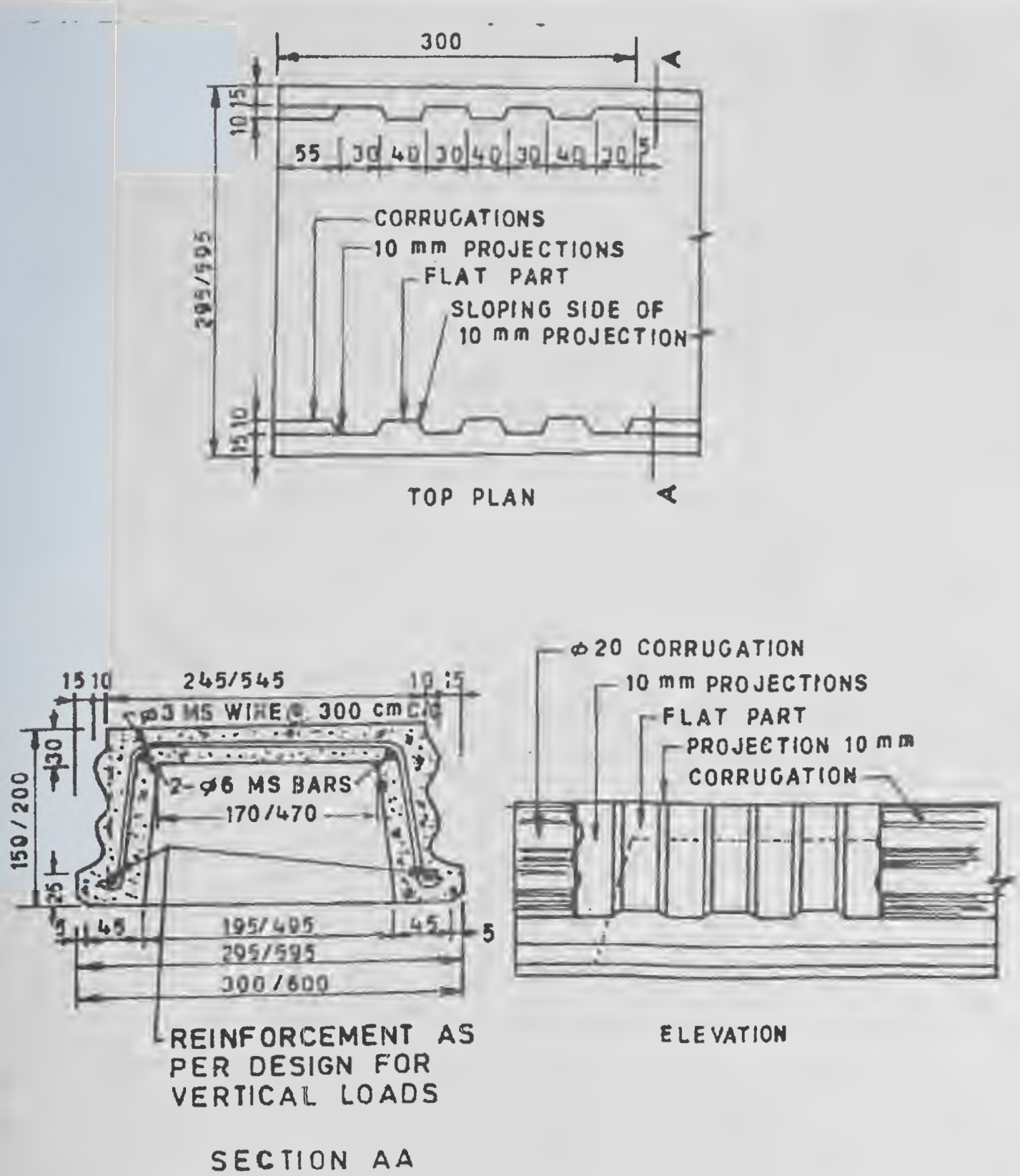

All dimensions in millimetres.

FIG. 30 CHANNEL UNITS

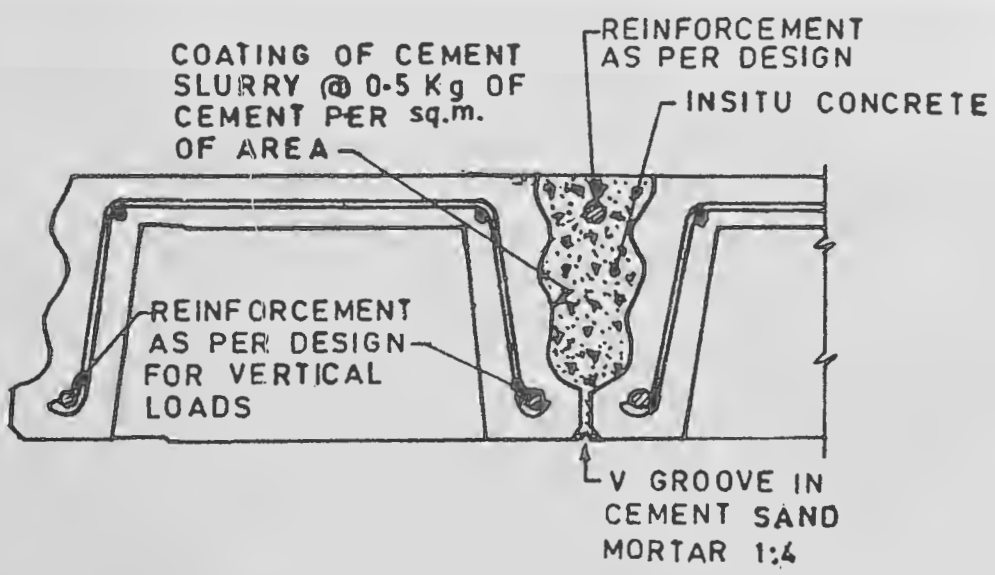

FIG. 31 CHANNEL UNITS

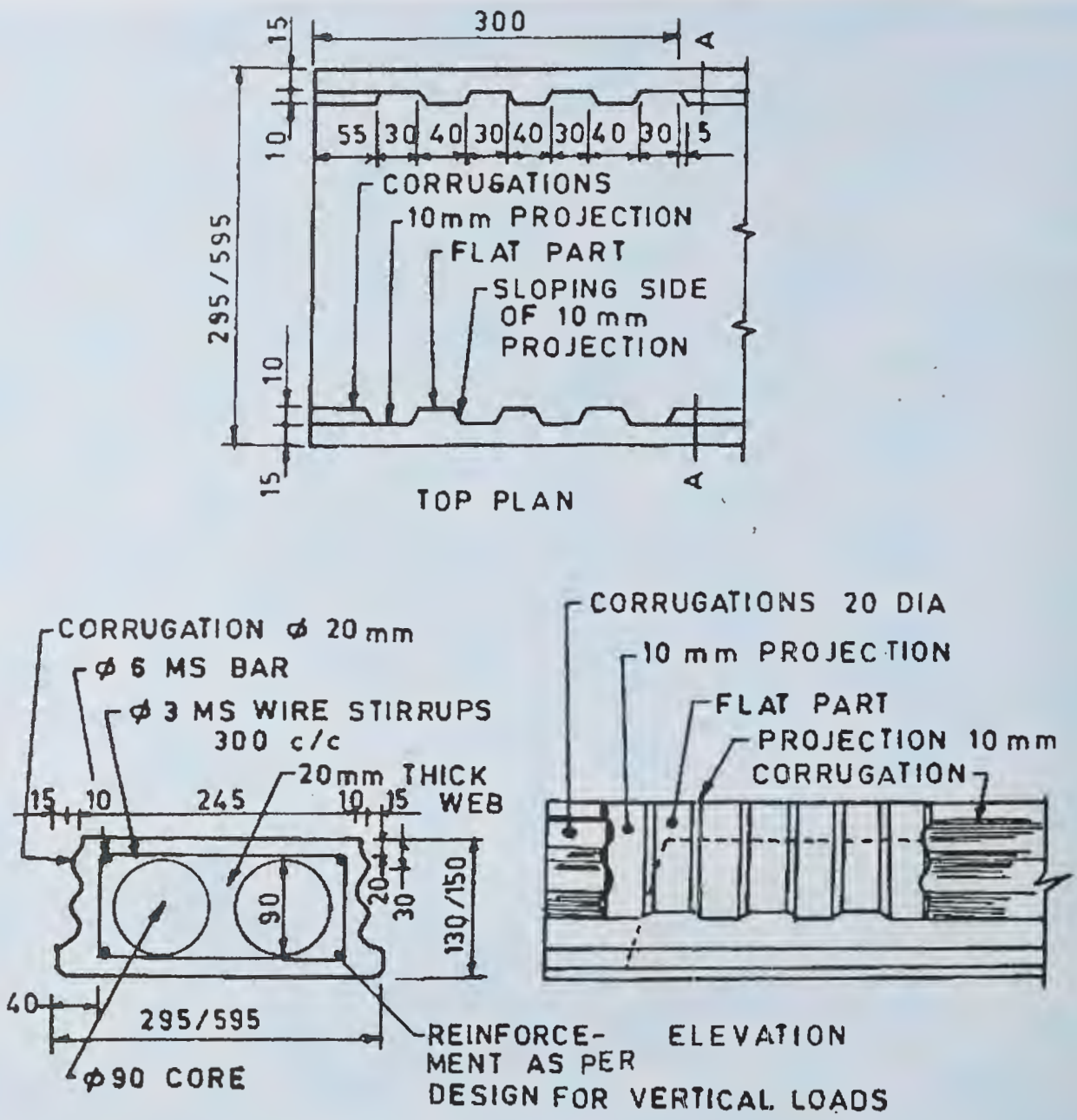

All dimensions in millimetres.

FIG. 32 CORE UNITS

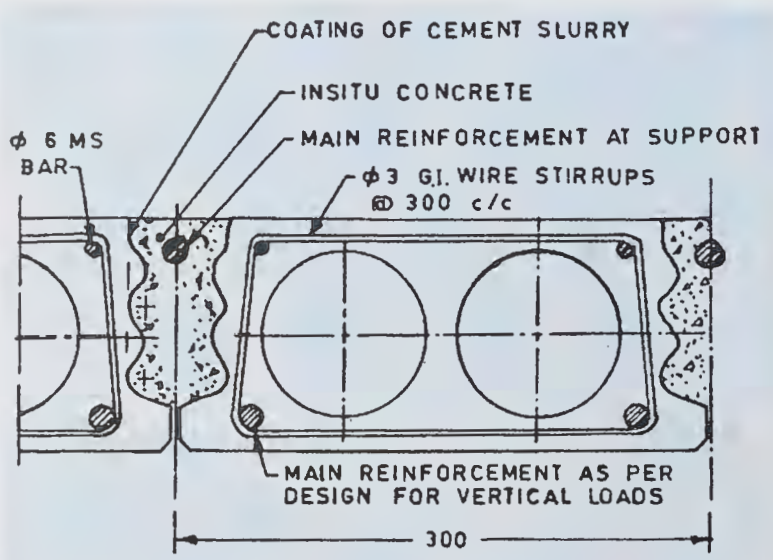

All dimensions in millimetres.

FIG. 33 CORED, UNIT FLOOR

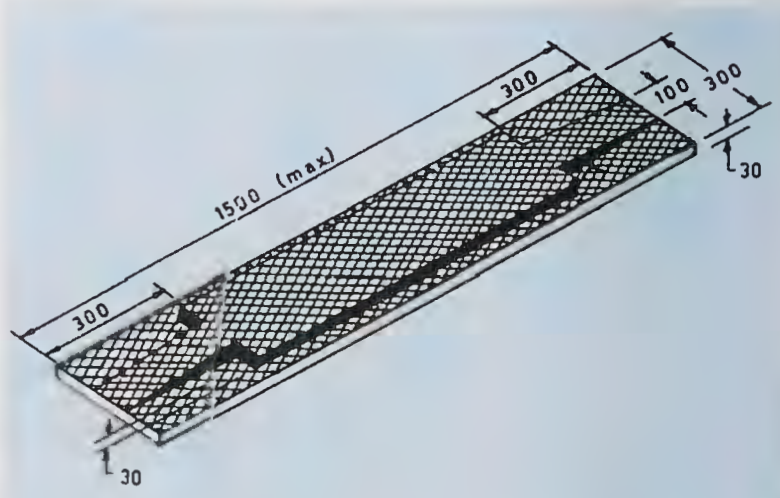

All dimensions in millimetres.

FIG. 34 PRECAST REINFORCED CONCRETE PLANK

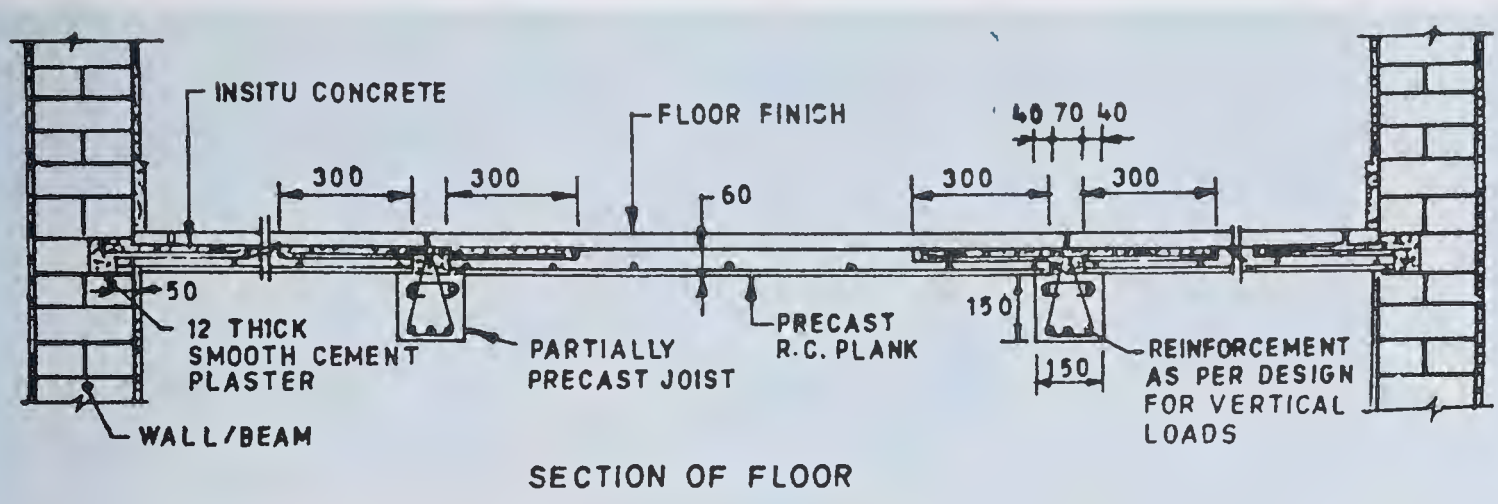

All dimensions in millimetres.

FIG. 35 PRECAST REINFORCED CONCRETE PLANK FLOOR

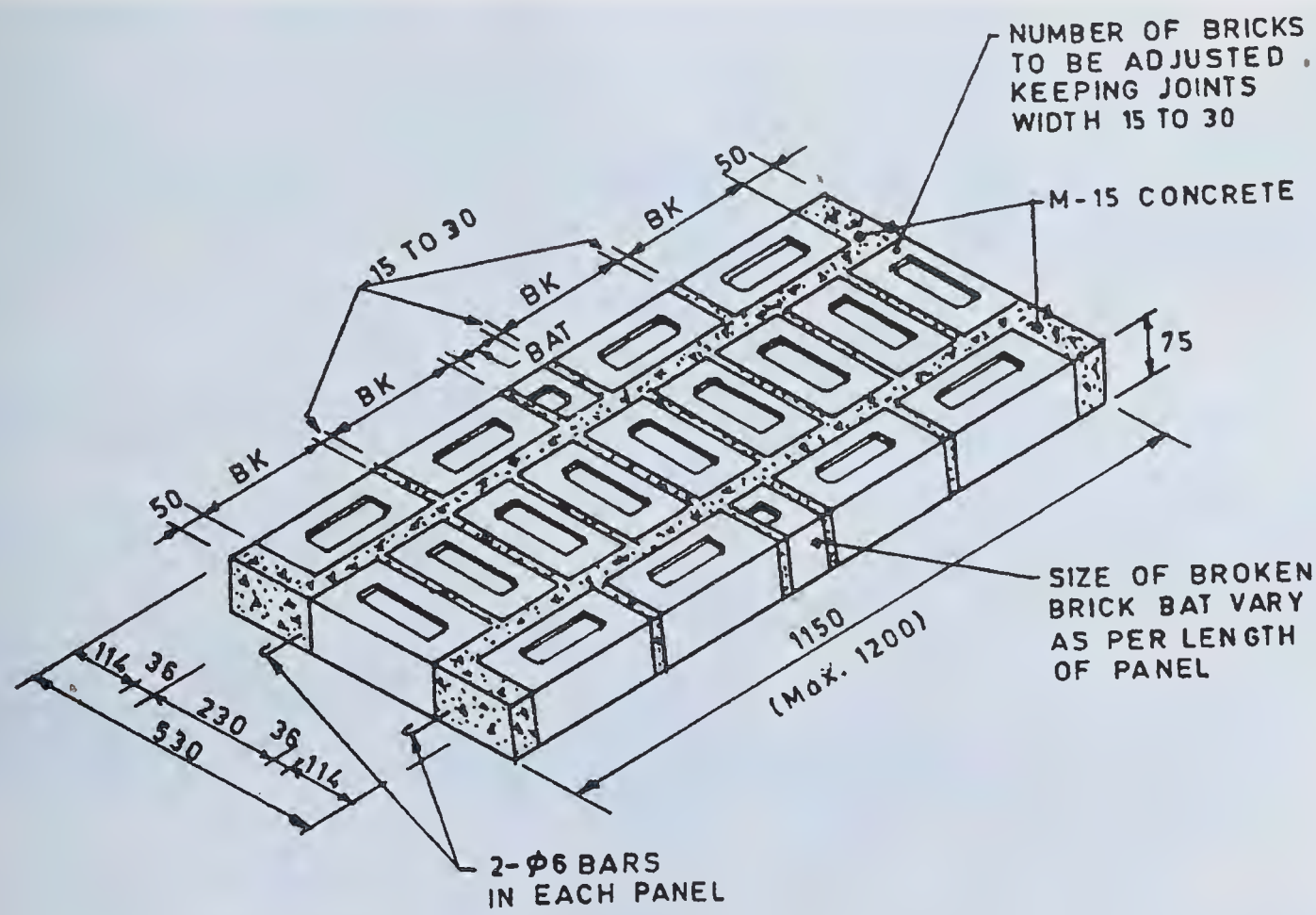

All dimensions in millimetres.

FIG. 36 PREFAB BRICK PANEL

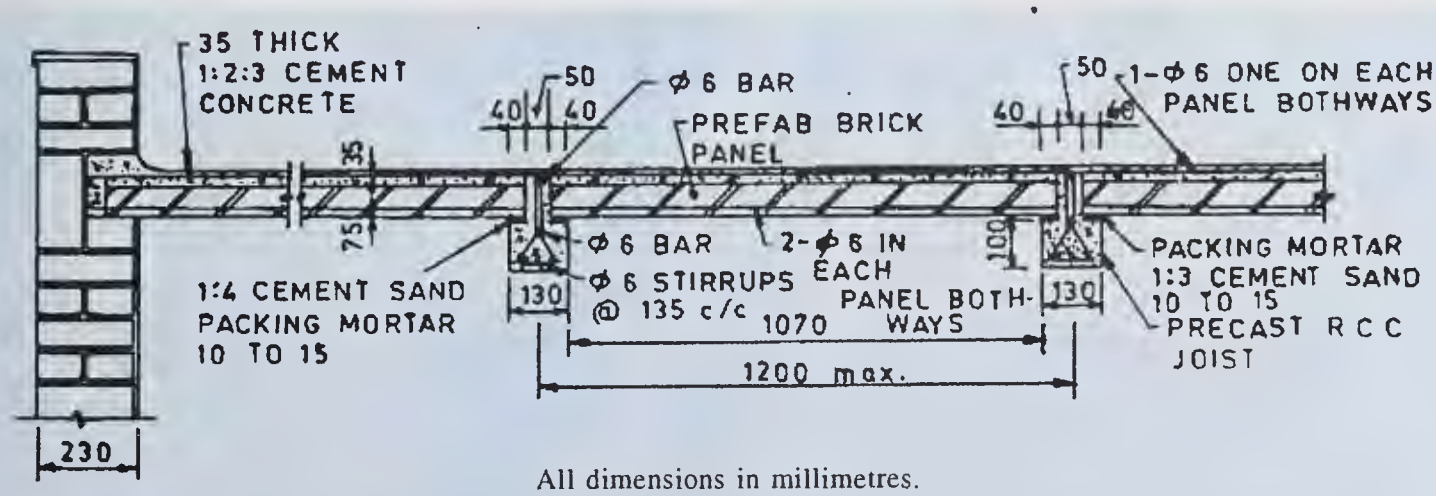

All dimensions in millimetres.

FIG. 37 BRICK PANEL FLOOR

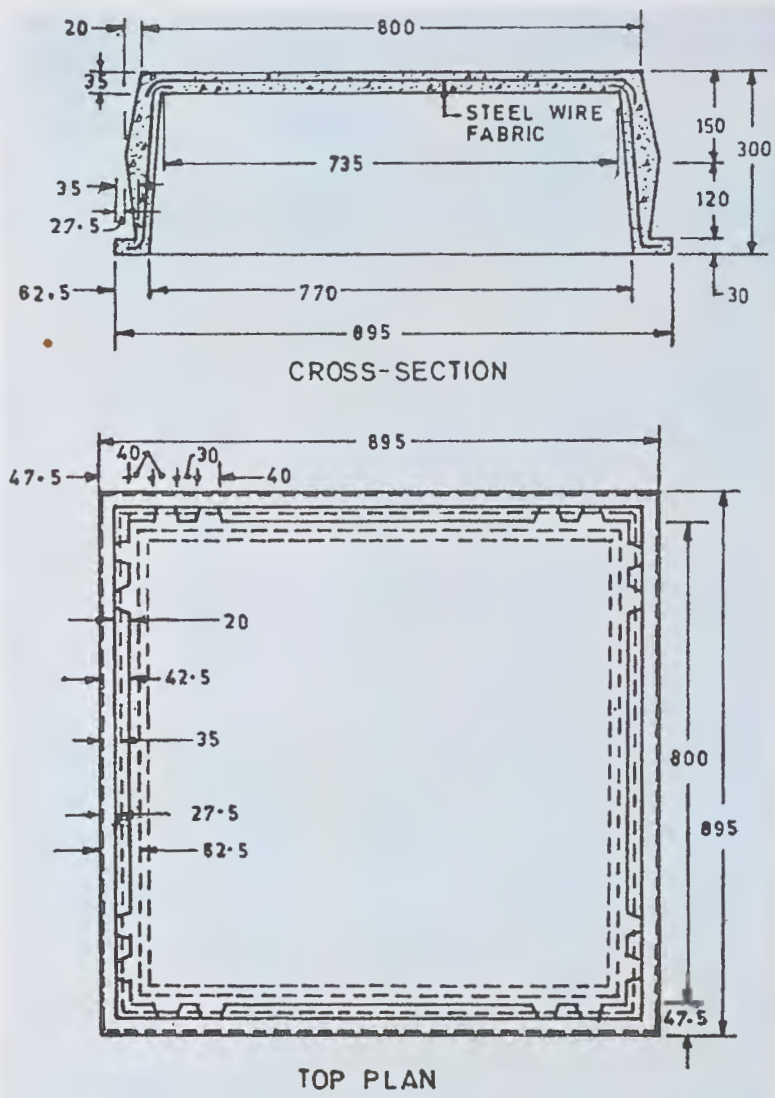

All dimensions in millimetres.

FIG. 38 WAFFLE UNITS

minimum thickness of flange/web shall be 35 mm. Horizontal projections may be provided on all the four external faces of the unit and the unit shall be so shaped that it shall act monolithic with *in-situ* concrete to ensure load transfer. Vertical castellation, called shear keys, shall be provided on all the four external faces of the precast units to enable them to transfer horizontal shear force from one unit to adjacent unit through *in-situ* concrete filled in the joints between the units. The waffle units shall be laid in a grid pattern with gaps between two adjacent units, and reinforcement, as per design, and structural concrete shall be provided in the gaps between the units in both the directions. The scheme is suitable for two way spanning roofs and floors of buildings having large spans.

8.7.2 *Seismic Resistance Measures*

8.7.2.1 All floors and roofs to be constructed with small precast components shall be strengthened as specified for various categories of buildings in Table 20. The strengthening measures are detailed in **8.7.2.3** and **8.7.2.8**.

8.7.2.2 Vertical castellation, called shear keys, shall be provided on the longitudinal faces of the channel, cored and waffle units to enable them to transfer horizontal shear force from one unit to the adjacent unit through the *in-situ* concrete filled in the joints between the units. The minimum percentage of area of shear keys as calculated below, on each face of the unit, shall be 15.

Shear keys shall have a minimum width of 40 mm at its root with the body of the component and shall be to the full height of the component and preferably at uniform spacing. Percentage of area of shear keys shall be calculated as:

$$\frac{\text{No. of shear keys on one face of the component} \times 40}{\text{Length of the face of the component, in mm}} \times 100$$

8.7.2.3 Tie beam (*see* Table 20) is a beam provided all round the floor or roof to bind together all the precast components to make it a diaphragm. The beams shall be to the full width of the supporting wall or beam less the bearing of the precast components. The depth of the beam shall be equal to the depth of the precast components plus the thickness of structural deck concrete, where used over the components. The beam shall be made of cement concrete of grade not leaner

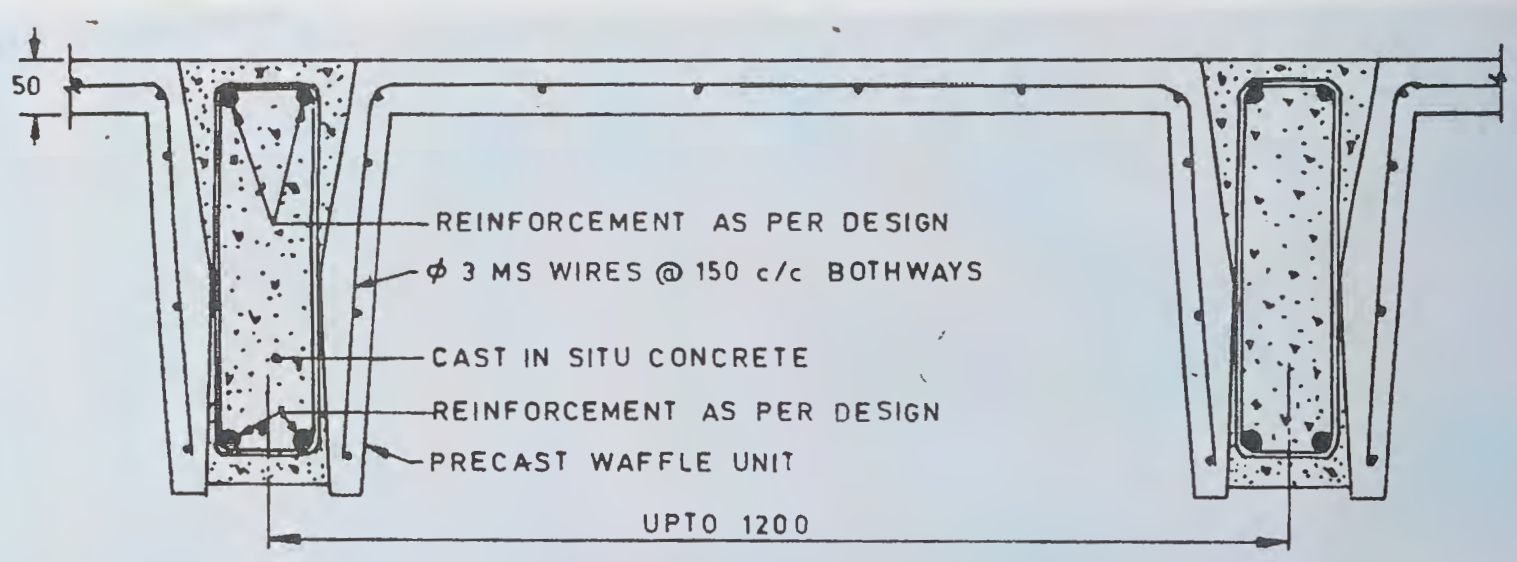

All dimensions in millimetres.

FIG. 39 WAFFLE UNIT FLOOR

Table 20 Strengthening Measures for Floors/ Roofs with Small Precast Components

(*Clauses* 8.7.2.1 *and* 8.7.2.8)

Sl No.	Building Category	Number of Storeys	Strengthening to be Provided in Floor/Roof with			
			Channel/ Cored Unit	R.C. Planks and Joists	Brick Panels and Joists	Waffle Units
(1)	(2)	(3)	(4)	(5)	(6)	(7)
i)	B	1 to 3	a	a	a	a
		4	a, c	a, c	a, d	a
ii)	C	1 and 2	a, b	a	a	a
		3 and 4	a, b, c	a, c	a, d	a, e
iii)	D	1 - 4	a, b c	a, c	a, d	a, c, e
iv)	E	1 - 3	a, b, c	a, c	a, d	a, c, e

NOTE

a — Tie beam as per **8.7.2.3**;

b — Reinforcing bars of precast unit and tied to tie beam reinforcement as per **8.7.2.4**;

c — Reinforced deck concrete as per **8.7.2.5**;

d — Reinforced deck concrete as per **8.7.2.6**; and

e — Reinforced bars in joint between precast waffle units tied to tie beam reinforcement as per **8.7.2.7**.

than M15 and shall be reinforced as indicated in Table 18. If depth of tie is more than 75 mm, equivalent reinforcement shall be provided with one bar of minimum diameter 8 mm at each corner. Tie beams shall be provided on all longitudinal and cross walls. Typical details of the beams are shown in Fig. 40 to Fig. 44.

NOTE — Adequate edge support say 60 mm, shall be provided to precast element on the wall so as to avert its slippage during seismic ground motion.

8.7.2.4 Top reinforcement in the channel or cored units (*see* Table 20) shall be projected out at both the ends for anchorage length and tied to tie beam reinforcement.

8.7.2.5 Structural deck concrete (*see* Table 20) of grade not leaner than M15 shall be provided over precast components or act monolithic. Wherever, deck concrete is to be provided, the top surface of the components shall be finished rough. Cement slurry with 0.5 kg of cement/m^2 of the surface area shall be applied over the components immediately before laying the deck concrete and the concrete shall be compacted using plate vibrators. The minimum thickness of deck concrete shall be 35 mm or 40 mm reinforced with 6 mm diameter bars and 150 mm apart both ways and anchored into the tie beam placed all round. The maximum size of coarse aggregate used in deck concrete shall not exceed 12 mm.

NOTE — Under conditions of economic constraints, the deck concrete itself could serve as floor finish. The concrete is laid in one operation (*see* Fig. 44) without joints.

8.7.2.6 The deck concrete normally used over the brick panel with joist floor shall be reinforced with 6 mm diameter bars spaced 150 mm apart both ways (*see* Table 20)

8.7.2.7 For floors/roofs with precast waffle units, two 16 mm diameter high strength deformed bars shall be provided as top reinforcement in the joints between waffle units, in addition to reinforcement required for taking bending moment for vertical loads. This reinforcement (*see* Table 20) shall be fixed to tie beam reinforcement.

8.7.2.8 In case of floors/roofs with precast components other than those indicated in Table 20, the buildings shall be analysed for maximum expected seismic forces and the floor/roof shall be designed to act as diaphragm and take care of the resulting forces.

8.8 Timber Construction

8.8.1 Timber has higher strength per unit weight and is, therefore, very suitable for earthquake resistant construction. Materials, design and construction in timber shall generally conform to good practice [6-4(17)].

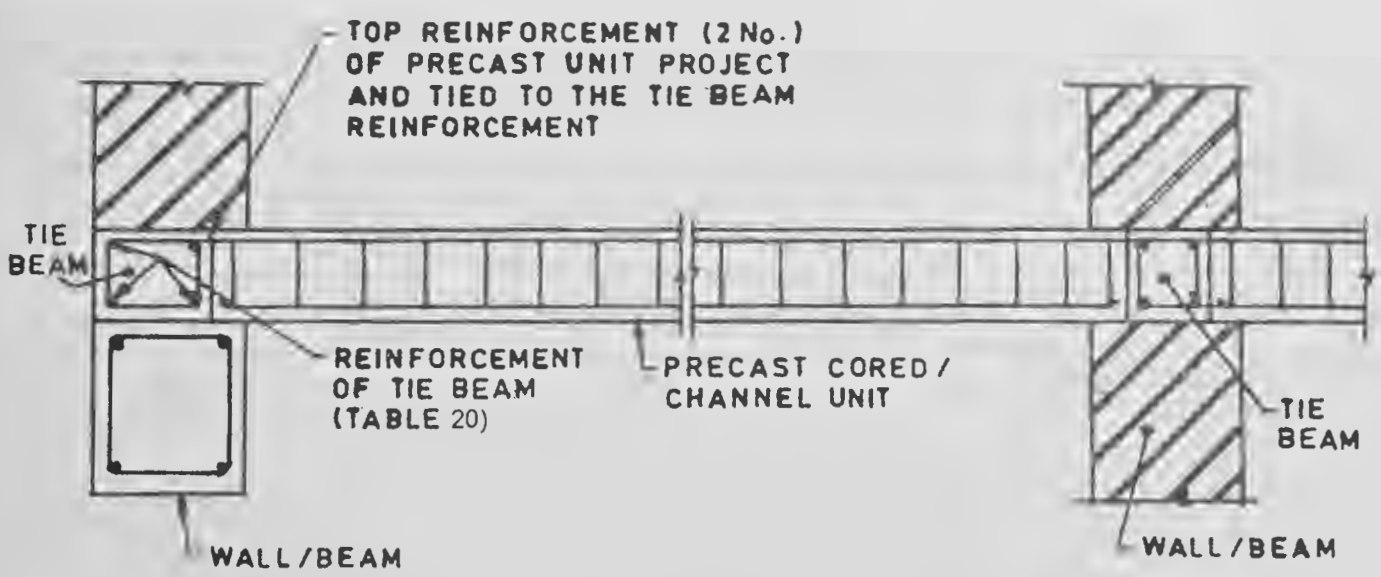

FIG. 40 CONNECTION OF PRECAST CORED/CHANNEL UNIT WITH TIE BEAM

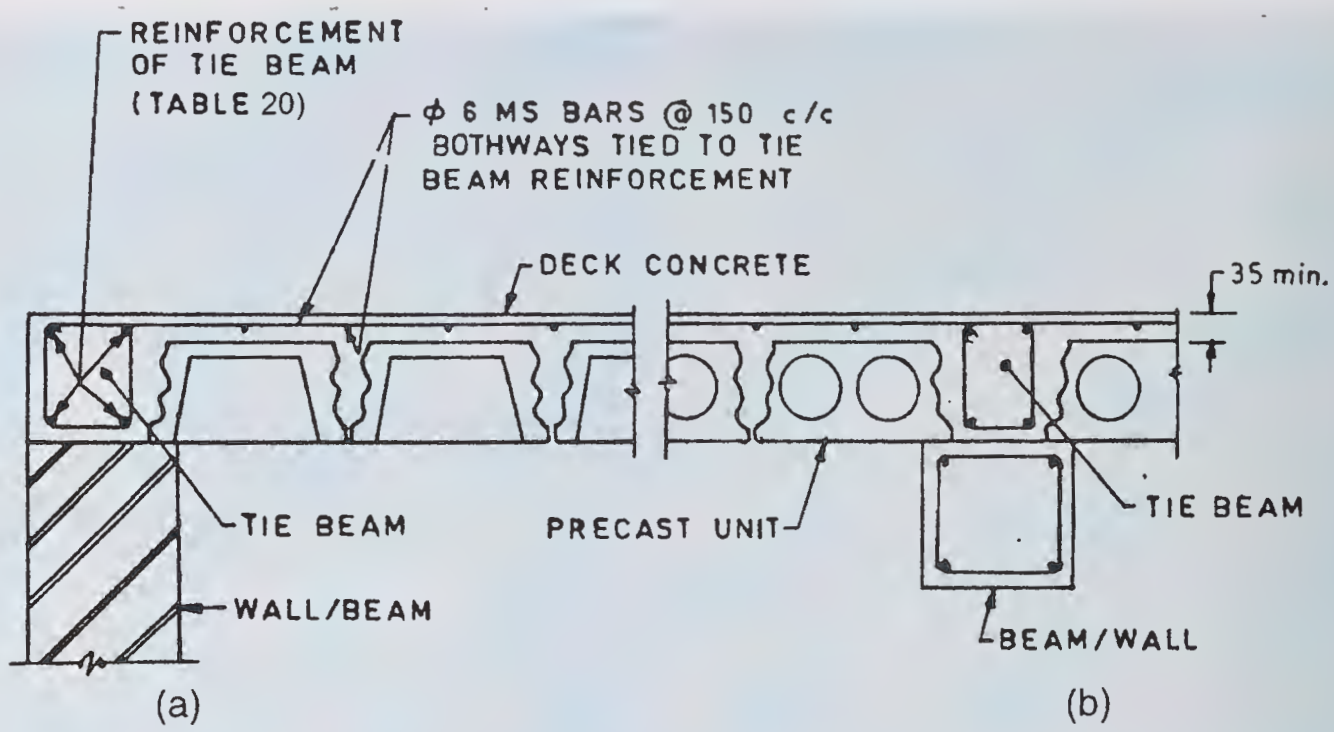

a) CHANNEL UNIT FLOOR/ROOF.
b) CORED UNIT FLOOR/ROOF.

All dimensions in millimetres.

FIG. 41 CONNECTION OF CHANNEL/CORED UNIT FLOOR/ROOF (WITH DECK CONCRETE) WITH TIE BEAM

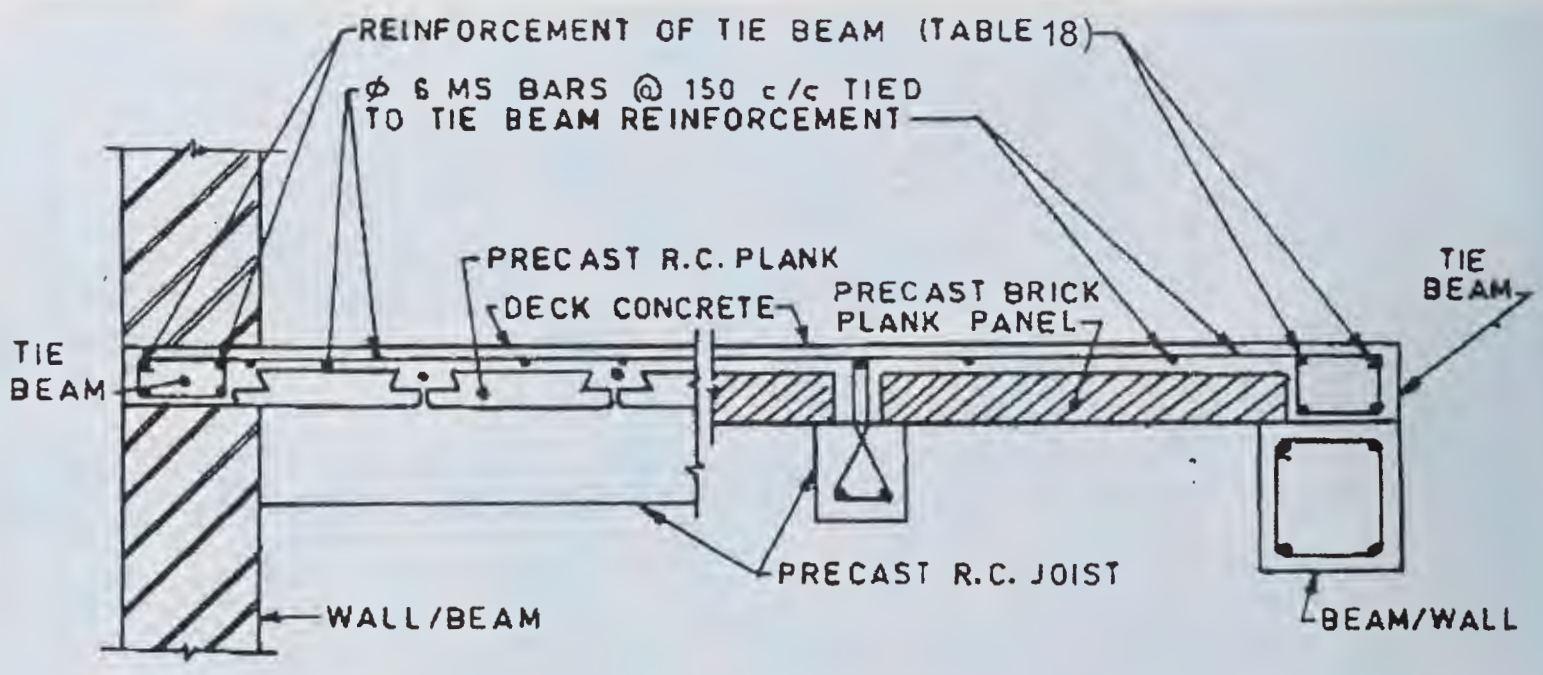

All dimensions in millimetres.

FIG. 42 CONNECTION OF PRECAST REINFORCED CONCRETE PLANK AND PRECAST BRICK PANEL FLOOR/ROOF (WITH DECK CONCRETE) WITH TIE BEAM

8.8.2 Timber (with masonry in-fill) construction shall generally be restricted to two storeys with or without the attic floor.

8.8.3 In timber (with masonry in-fill) construction attention shall be paid to fire safety against electric short circuiting, kitchen fire, etc.

8.8.4 The superstructure of timber buildings shall be made rigid against deformations by adopting suitable construction details at the junctions of the framing members and in wall panels as given in **8.8.6** to **8.8.10** so that the construction as a whole behaves as one unit against earthquake forces.

8.8.5 *Foundations*

8.8.5.1 Timber construction shall preferably start above the plinth level, the portion below shall be in masonry or concrete.

8.8.5.2 The superstructure may be connected with the foundation in one of the two ways as given below:

a) The superstructure may simply rest on the

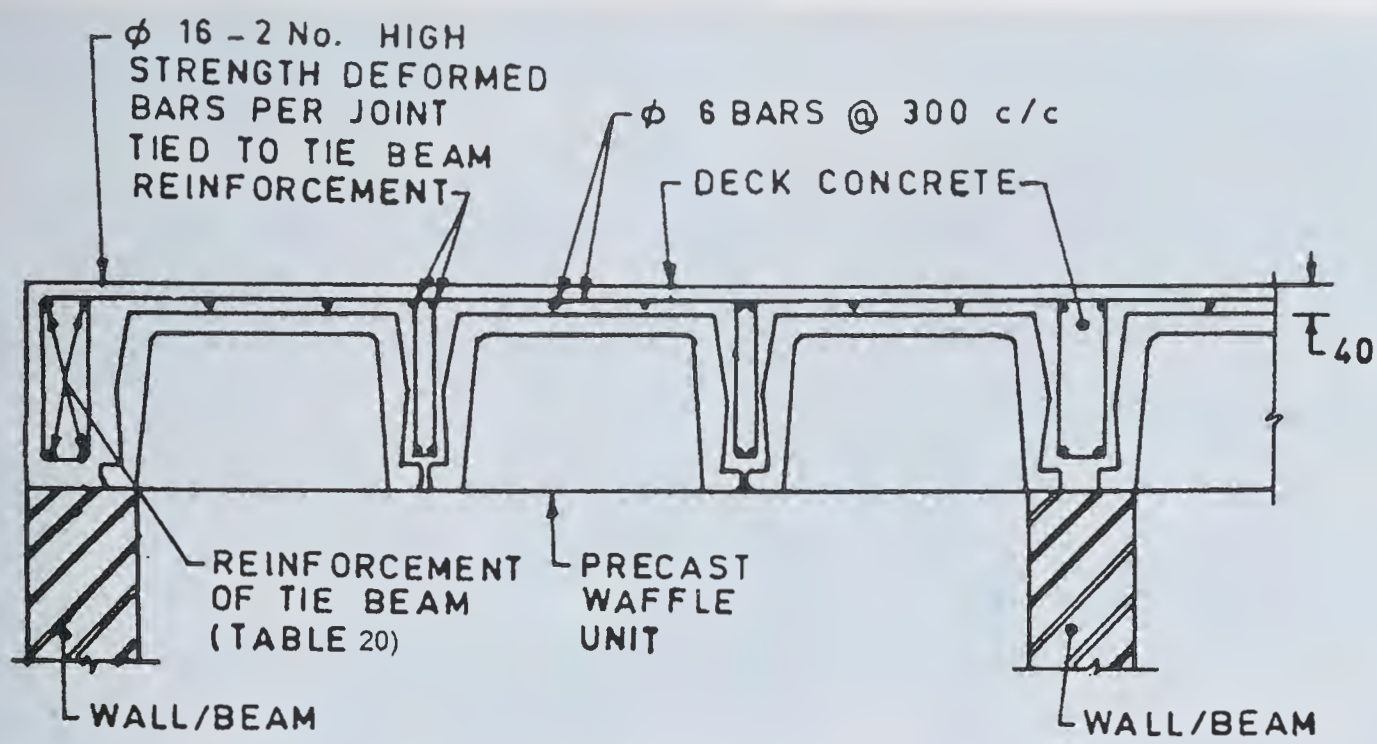

All dimensions in millimetres.

FIG. 43 CONNECTION OF PRECAST WAFFLE UNIT FLOOR/ROOF (WITH DECK CONCRETE) WITH TIE BEAM

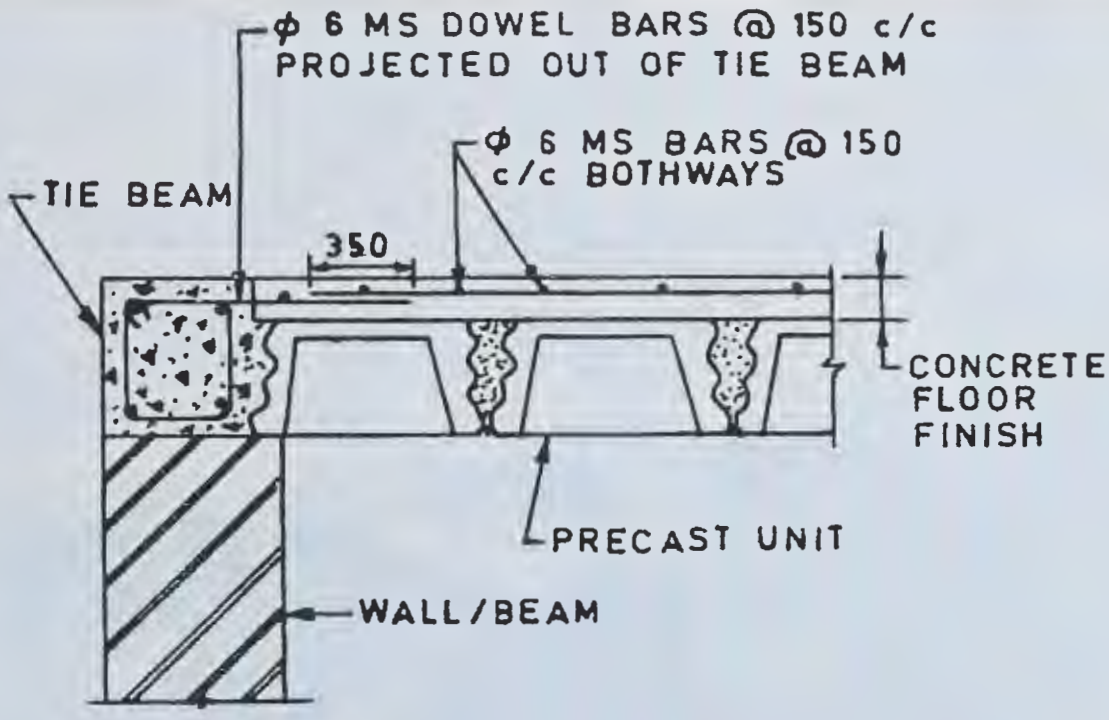

All dimensions in millimetres.

FIG. 44 PROVISION OF REINFORCEMENT IN CONCRETE FLOOR FINISH

plinth masonry, or in the case of small buildings of one storey having plan area less than about 50 m², it may rest on firm plane ground so that the building is free to slide laterally during ground motion.

NOTES

1 Past experience has shown that superstructure of the buildings not fixed with the foundation escaped collapse even in a severe earthquake although they were shifted sideways.

2 Where fittings for water supply or water borne sanitation from the house are to be installed, proper attention should be given to permit movement so as to avoid fracture of damage to pipes.

b) The superstructure may be rigidly fixed into the plinth masonry or concrete foundation as given in Fig. 45 or in case of small building having plan area less than 50 m², it may be fixed to vertical poles embedded into the ground. In each case the building is likely to move along with its foundation. Therefore, the superstructure shall be designed to carry the resulting earthquake shears.

8.8.6 *Types of Framing*

The types of construction usually adopted in timber building are as follows:

a) Stud wall construction; and

b) Brick nogged timber frame construction.

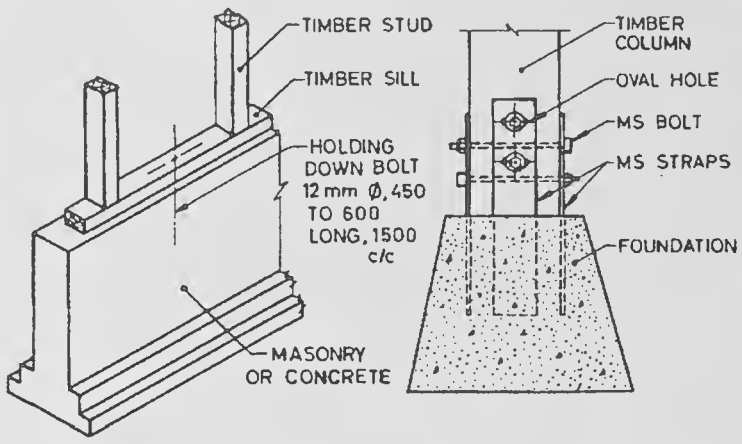

45A Suitable for Strip Foundation 45B Suitable for Isolated Column Footings

All dimensions in millimetres.

FIG. 45 DETAILS OF CONNECTION OF COLUMN WITH FOUNDATION

8.8.7 *Stud Wall Construction*

8.8.7.1 The stud wall construction consists of timber studs and corner posts framed into sills, top plates and wall plates. Horizontal struts and diagonal braces are used to stiffen the frame against lateral loads. The wall covering may consist of *EKRA*, timber or like. Typical details of stud walls are shown in Fig. 46. Minimum sizes and spacing of various members used are specified in **8.8.7.2** to **8.8.7.10**.

8.8.7.2 The timber studs for use in load bearing walls shall have a minimum finished size of 40 × 90 mm and their spacing shall not exceed those given in Table 21.

8.8.7.3 The timber studs in non-load bearing walls shall not be less than 40 × 70 mm in finished cross section. Their spacing shall not exceed 1 m.

8.8.7.4 There shall be at least one diagonal brace for every 1.6 m × 1 m area of load bearing walls. Their minimum finished sizes shall be in accordance with Table 22.

8.8.7.5 The horizontal struts shall be spaced not more than 1 m apart. They shall have a minimum size of 30 × 40 mm for all locations.

8.8.7.6 The finished sizes of the sill, the wall plate and top plate shall not be less than the size of the studs used in the wall.

8.8.7.7 The corner posts shall consists of three timbers, two being equal in size to the studs used in the walls meeting at the corner and the third timber being of a size to fit so as to make a rectangular section (*see* Fig. 46).

8.8.7.8 The diagonal braces shall be connected at their ends with the stud wall members by means of wire nails having 6 gauge (4.88 mm diameter) and 100 mm length. Their minimum number shall be 4 nails

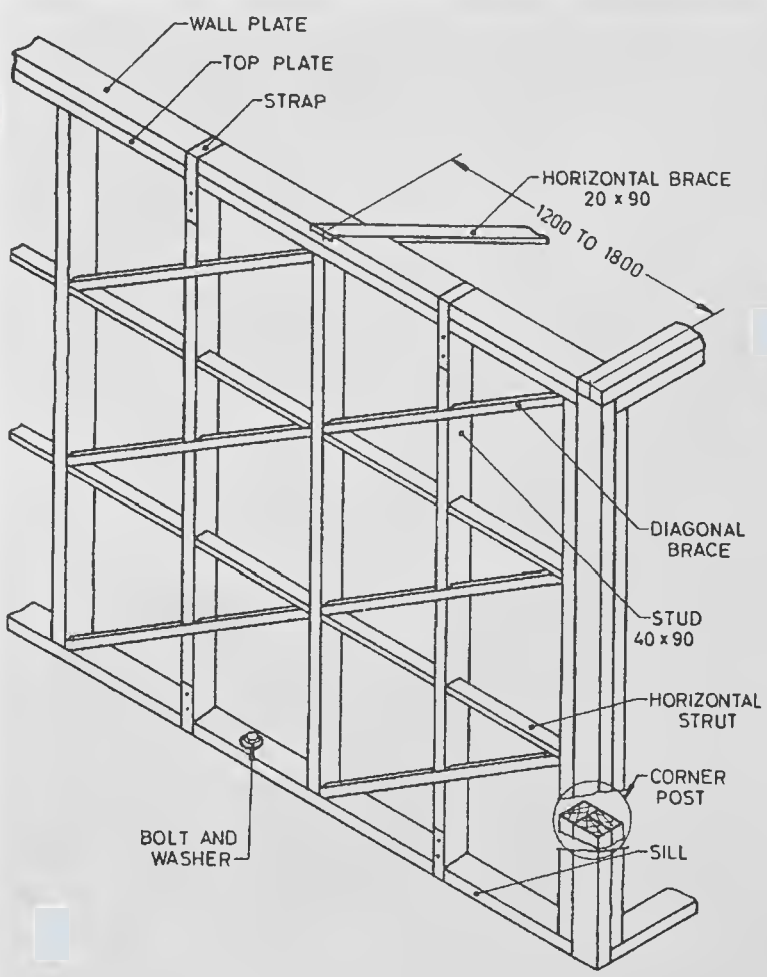

All dimensions in millimetres.

46A Timber Framing in Stud Wall Construction without Opening in Wall

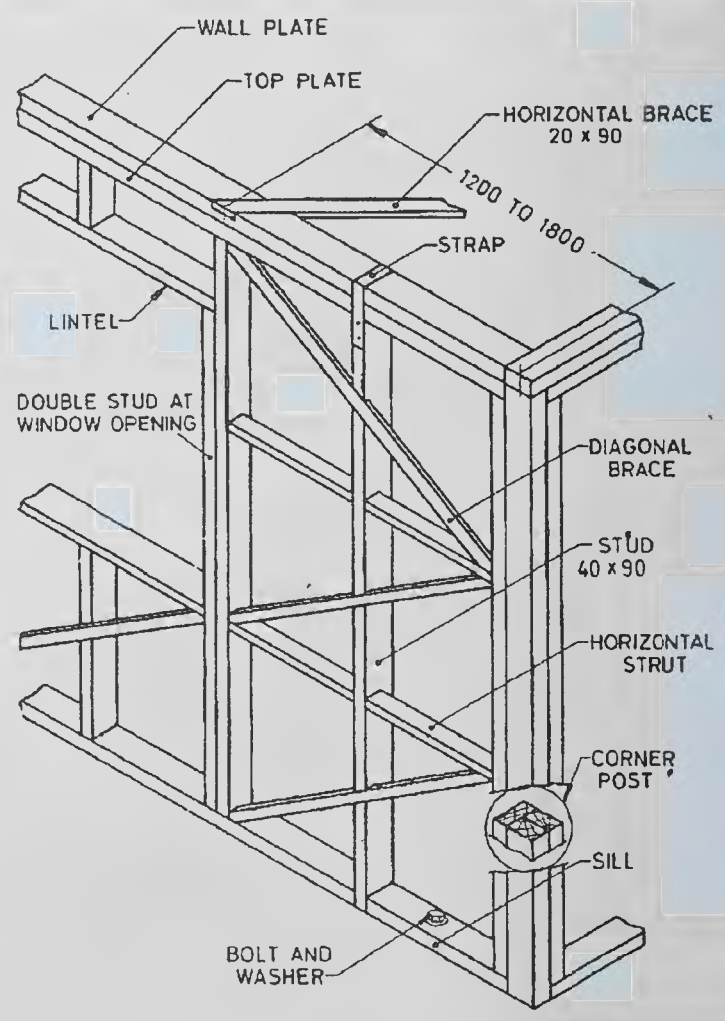

All dimensions in millimetres.

46B Timber Framing in Stud Wall Construction with Opening in Wall

FIG. 46 STUD WALL CONSTRUCTION

Table 21 Maximum Spacing of 40 mm × 90 mm Finished Size Studs in Stud Wall Construction

(*Clause* 8.8.7.2)

Sl No.	Group of Timber [Grade I[1)]]	Single Storeyed or First Floor of the Double Storeyed Buildings		Ground Floor of Double Storeyed Buildings	
		Exterior Wall	Interior Wall	Exterior Wall	Interior Wall
		mm	mm	mm	mm
(1)	(2)	(3)	(4)	(5)	(6)
i)	Group A, B	1 000	800	500	400
ii)	Group C	1 000	1 000	500	500

[1)]Grade I timbers as defined in Table 5 of good practice [6-4(17)].

Table 22 Minimum Finished Sizes of Diagonal Braces

(*Clause* 8.8.7.4)

Sl No.	Building Category (*see* Table 2)	Group of Timber [Grade I[1)]]	Single Storeyed or First Floor of Double Storeyed Buildings		Ground Floor of Double Storeyed Buildings	
			Exterior Wall	Interior Wall	Exterior Wall	Interior Wall
			mm × mm	mm × mm	mm × mm	mm × mm
(1)	(2)	(3)	(4)	(5)	(6)	(7)
i)	B, C	All	20 × 40	20 × 40	20 × 40	20 × 40
ii)	D and E	Group A and Group B	20 × 40	20 × 40	20 × 40	30 × 40
		Group C	20 × 40	30 × 40	30 × 40	30 × 40

[1)] Grade I timber as defined in Table 5 of good practice [6-4(17)].

for 20 mm × 40 mm braces and 6 nails for 30 mm × 40 mm braces. The far end of nails may be clutched as far as possible.

8.8.7.9 Horizontal bracing shall be provided at corners of T-junctions of walls at sill, first floor and eaves levels. The bracing members shall have a minimum finished size of 20 mm × 90 mm and shall be connected by means of wire nails to the wall plates at a distance between 1.2 m and 1.8 m measured from the junction of the walls. There shall be a minimum number of six nails of 6 gauge (4.88 mm diameter) and 100 mm length with clutching as far ends.

8.8.7.10 Unsheathed studding shall not be used adjacent to the wall of another building. The studding shall be sheathed with close jointed 20 mm or thicker boards.

8.8.8 *Brick Nogged Timber Frame Construction*

8.8.8.1 The brick nogged timber frame consists of intermediate verticals, columns, sills, wall plates, horizontal nogging members and diagonal braces framed into each other and the space between framing members filled with tight-fitting brick masonry in stretcher bond. Typical details of brick nogged timber frame construction are shown in Fig. 47. Minimum sizes and spacing of various elements used are specified in **8.8.8.2** to **8.8.8.9**.

8.8.8.2 The vertical framing members in brick nogged load bearing walls shall have minimum finished sizes as specified in Table 22.

8.8.8.3 The minimum finished size of the vertical members in non-load bearing walls shall be 40 mm × 100 mm spaced not more than 1.5 m apart.

8.8.8.4 The sizes of diagonal bracing members shall be the same as in Table 22.

8.8.8.5 The horizontal framing members in brick-nogged construction shall be spaced not more than 1 m apart. Their minimum finished sizes shall be in accordance with Table 23 and Table 24.

8.8.8.6 The finished sizes of the sill, wall plate and top plate shall be not less than the size of the vertical members used in the wall.

8.8.8.7 Corner posts shall consist of three vertical timbers as described in **8.8.7.7**.

8.8.8.8 The diagonal braces shall be connected of their ends with the other members of the wall by means of wire nails as specified in **8.8.7.8**.

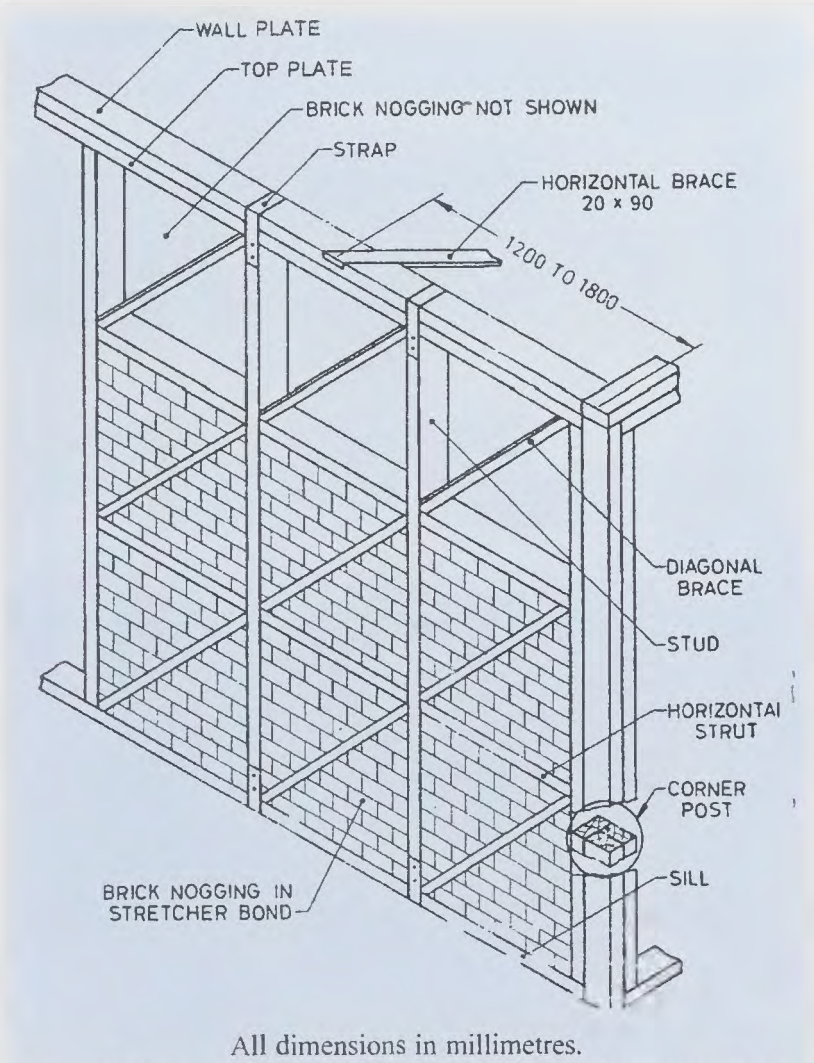

All dimensions in millimetres.

FIG. 47 BRICK NOGGED TIMBER FRAME CONSTRUCTION

Table 23 Minimum Finished Sizes of Vertical in Brick Nogged Timber Frame Construction

(*Clauses* 8.8.8.5)

Sl No.	Spacing	Group of Timber [Grade I[1)]]	Single Storeyed or First Floor of Double Storeyed Buildings		Ground Floor of Double Storeyed Buildings	
			Exterior Wall	Interior Wall	Exterior Wall	Interior Wall
	m		mm × mm	mm × mm	mm × mm	mm × mm
(1)	(2)	(3)	(4)	(5)	(6)	(7)
i)	1	Group A,B	50 × 100	50 × 100	50 × 100	50 × 100
		Group C	50 × 100	70 × 100	70 × 100	90 × 100
ii)	1.5	Group A,B	50 × 100	70 × 100	70 × 100	80 × 100
		Group C	70 × 100	80 × 100	80 × 100	100 × 100

[1)] Grade I timber as defined in Table 5 of good practice [6-4(17)].

Table 24 Minimum Finished Size of Horizontal Nogging Members

(*Clause* 8.8.8.5)

Sl No.	Spacing of Verticals	Size
	m	mm
(1)	(2)	(3)
i)	1.5	70 × 100
ii)	1	50 × 100
iii)	0.5	25 × 100

8.8.8.9 Horizontal bracing members of corners of T-junctions of wall shall be as specified in **8.8.7.9**.

8.8.9 *Notching and Cutting*

8.8.9.1 Timber framing frequently requires notching and cutting of the vertical members. The notching or cutting should in general be limited to 20 mm in depth unless steel strips are provided to strengthen the notched face of the members. Such steel strips, where necessary shall be at least 1.5 mm thick and 35 mm wide extending at least 150 mm beyond each side of the notch or cut and attached to the vertical member by means of bolts or screws at each end.

8.8.9.2 The top plate, the wall plate or the sill of a wall may be notched or cut, if reinforcing strip of iron is provided as specified in **8.8.9.1**. In case the member is notched or cut not to exceed 40 mm in depth, such reinforcing strip may be placed along the notched edge only. Where the notch or cut is more than 40 mm in depth or the member is completely cut through, such reinforcing strips shall be placed on both edges of the member. The details of notching and cutting are shown in Fig. 48.

8.8.9.3 Joints in timber shall preferably be bound by metallic fasteners.

8.8.10 *Bridging and Blocking*

8.8.10.1 All wooden joists shall have at least one row of cross bridging for every 3.5 m length of span. The cross-section of the bridging member shall be a minimum of 40 × 70 mm and the member shall be screwed or nailed to the joists.

8.8.10.2 All spaces between joists shall be blocked at all bearing with solid blocks not less than 40 mm thick and the full depth of the joists. The block shall be screwed or nailed to the joists as well as to the bearings.

8.9 *Confined Masonry Building Construction*

For the provisions relating to confined masonry building construction (*see* Annex E).

9 GUIDELINES FOR IMPROVING EARTHQUAKE RESISTANCE OF LOW STRENGTH MASONRY BUILDINGS

9.0 The term 'low strength masonry' includes fired brickwork laid in clay mud mortar and random rubble; uncoursed, undressed or semi-dressed stone masonry in weak mortars; such as cement sand, lime sand and clay mud. Special features of design and construction for improving earthquake resistance of buildings of low strength masonry are given in **9.1** to **9.6.5.7.**

9.1 For the purpose of this clause, the terminology given in **8.1** shall apply.

9.2 General Principles

The general principles given in **9.2.1** to **9.2.5** shall be observed in construction of earthquake resistant buildings.

9.2.1 *Lightness*

Since the earthquake force is a function of mass, the weight of the building shall be as minimum as possible, consistent with structural safety and functional requirements. Roofs and upper storeys of buildings, in particular, should be designed as light as possible.

9.2.2 *Continuity of Construction*

9.2.2.1 As far as possible, the parts of the building should be tied together in such a manner that the building acts as one unit.

9.2.2.2 For integral action of building, roof and floor slabs should be continuous throughout as far as possible.

9.2.2.3 Additions and alterations to the structures should be accompanied by the provision of positive measures to establish continuity between the existing and the new construction.

9.2.3 *Projecting and Suspended Parts*

9.2.3.1 Projecting parts should be avoided as far as

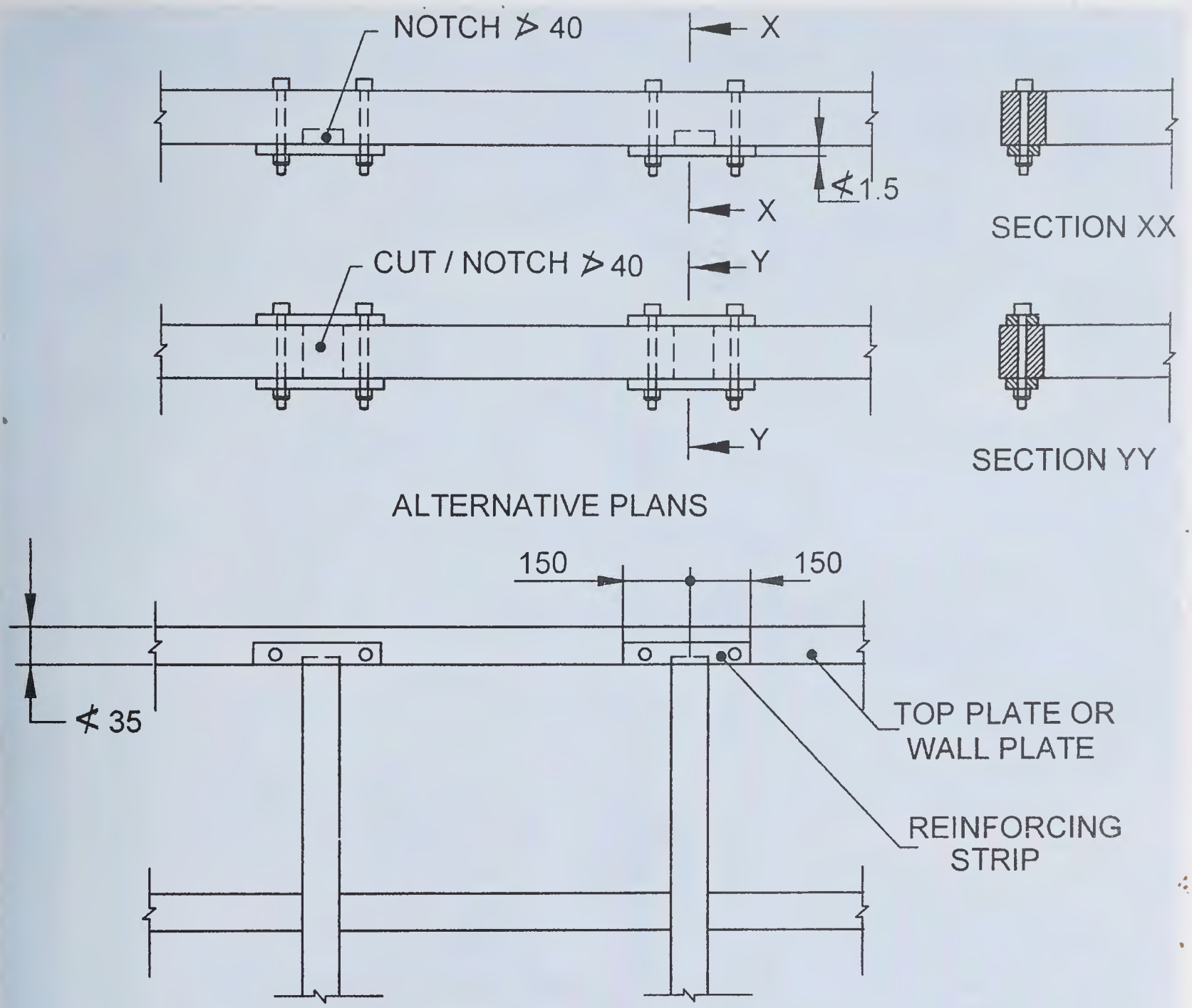

All dmensions in millimetres.

FIG. 48 NOTCHING AND CUTTING

possible. If the projecting parts cannot be avoided, they should be properly reinforced and firmly tied to the main structure, and their design should be in accordance with good practice [6-4(7)].

NOTE — In cases where stability of projecting parts against overturning is achieved by counterweight in the form of wall, slab, etc, the overturning should be checked by increasing the weight of projecting part and decreasing the weight of stabilizing mass simultaneously in accordance with the vertical seismic coefficient specified in **4.4.2** of good practice [6-4(7)].

9.2.3.2 Ceiling plaster shall preferably be avoided. When it is unavoidable, the plaster shall be as thin as possible.

9.2.3.3 Suspended ceiling shall be avoided as far as possible. Where provided they shall be light, adequately framed and secured.

9.2.4 *Building Configuration*

9.2.4.1 In order to minimise torsion, the building should have a simple rectangular plan and be symmetrical both with respect to mass and rigidity so that the centre of mass and rigidity of the building coincide with each other. It will be desirable to use separate blocks of rectangular shape particularly in Seismic Zone V and Seismic Zone IV.

NOTE — For small buildings, minor asymmetry in plan and elevation may be ignored. Designing such buildings against torsion may be difficult and uncertain.

9.2.5 *Fire Safety*

Fire frequently follows an earthquake and therefore, buildings shall be constructed to make them fire resistant in accordance with the provisions of Part 4 'Fire and Life Safety' of the Code for fire safety, as relevant.

9.3 Special Construction Features

9.3.1 *Foundations*

9.3.1.1 For the design of foundations, the provisions of Part 6 'Structural Design, Section 2 Soils and Foundation' of the Code in conjunction with **5** of Part

6 'Structural Design, Section 1 Loads, Forces and Effects' of the Code shall generally be followed.

9.3.1.2 The subgrade below the entire area of the building shall preferably be of the same type of the soil. Wherever this is not possible, the buildings should preferably be separated into units and then the units should be located separately.

9.3.1.3 Loose fine sand, soft silt and expansive clays should be avoided. If unavoidable, the following measures may be taken to improve the soil on which the foundation of the building may rest:

a) Sand piling/under-reamed piling/stone columns, etc; and
b) Soil stabilization.

9.3.2 *Roofs and Floors*

9.3.2.1 Flat roof or floor should not preferably be made of tiles or ordinary bricks supported on steel, timber or reinforced concrete joists, nor they shall be of a type which in the event of an earthquake is likely to be loosened and parts or all of which may fall. If this type of construction cannot be avoided, the joists should be blocked at ends and bridged at intervals such that their spacing is not altered during an earthquake.

9.3.2.1.1 For pitched roofs, corrugated iron or asbestos sheets should be used in preference to country, Allahabad or Mangalore tiles or other loose roofing units. All roofing materials shall be properly tied to the supporting members. Heavy roofing materials shall generally be avoided.

9.3.2.2 *Pent roofs*

9.3.2.2.1 All roof trusses should be supported on and fixed to timber band, reinforced concrete, or reinforced brick band. The holding down bolts should have adequate size and length as required for earthquake and wind forces.

Where a trussed roof adjoins a masonry gable, the ends of the purlins should be carried on and secured to a plate or bearer which shall be adequately bolted to reinforced concrete or reinforced brick band at the top of gable end masonry.

9.3.2.2.2 At tie level all the trusses and the gable end should be provided with diagonal braces in plan so as to transmit the lateral shear due to earthquake force to the gable walls acting as shear walls.

9.3.2.3 *Jack arches*

Jack arched roofs or floors, where used should be provided with mild steel ties in all spans along with diagonal braces in plan to ensure diaphragm actions.

9.3.3 *Staircases*

9.3.3.1 The inter-connection of the stairs with the adjacent floors should be appropriately treated by providing sliding joints at the stairs to eliminate their bracing effect on the floors. Ladders may be made fixed at one end and freely resting at the other.

9.3.3.2 *Built-in staircase*

When stairs are built monolithically with floors, they can be protected against damage by providing rigid walls at the stair opening. The walls enclosing the staircase, should extend through the entire height of the stairs and to the building foundations.

9.4 Box Type Construction

This type of construction consists of prefabricated or *in-situ* masonry walls along both the axes of the building. The walls support vertical loads and also act as shear walls for horizontal loads acting in any direction. All traditional masonry construction falls under this category. In prefabricated construction attention shall be paid to the connection between wall panels so that transfer of shear between them is ensured.

9.5 Categories of Buildings

For the purpose of specifying the earthquake resisting features in masonry and wooden buildings, the buildings have been categorized in four categories B to E based on the seismic zone and the importance of building I, where I – importance factor applicable to the building [*see* **6.4.2** and Table 6 of good practice [6-4(8)], the classification as given in **8.5** shall be applicable. The building categories are given in Table 14.

9.6 Low Strength Masonry Construction

9.6.1 Two types of construction are included herein, namely:

a) Brick construction using weak mortar, and
b) Random rubble and half-dressed stone masonry construction using different mortars such as clay mud, lime-sand and cement sand.

9.6.1.1 These constructions should not be permitted for important buildings and should preferably be avoided for building category D and shall not be used for category E (*see* Table 14).

9.6.1.2 It will be useful to provide damp-proof course at plinth level to stop the rise of pore water into the superstructure.

9.6.1.3 Precautions should be taken to keep the rain water away from soaking into the wall so that the mortar is not softened due to wetness. An effective way is to take out roof projections beyond the walls by about 500 mm.

9.6.1.4 Use of a water-proof plaster on outside face of walls will enhance the life of the building and maintain its strength at the time of earthquake as well.

9.6.1.5 Ignoring tensile strength, free standing walls should be checked against overturning under the action of design seismic coefficient, α_h, allowing for a factor of safety of 1.5.

9.6.2 *Brickwork in Weak Mortars*

9.6.2.1 The fired bricks should have a compressive strength not less than 3.5 MPa. Strength of bricks and wall thickness should be selected for the total building height.

9.6.2.2 The mortar should be lime-sand (1:3) or clay mud of good quality. Where horizontal steel is used between courses, cement-sand mortar (1:3) should be used with thickness so as to cover the steel with 6 mm mortar above and below it. Where vertical steel is used, the surrounding brickwork of 1x1 or 1½ × 1½ brick size depending on wall thickness should preferably be built using 1:6 cement-sand mortar.

9.6.2.3 The minimum wall thickness shall be one brick in one storey construction, and one brick in top storey and 1½ brick in bottom storeys of up to three storey construction. It should also not be less than 1/16 of the length of wall between two consecutive perpendicular walls.

9.6.2.4 The height of the building shall be restricted to the following, where each storey height shall not exceed 3.0 m :

For Categories B: and C	three storeys with flat roof; and two storeys plus attic for pitched roof.
For Category D:	two storeys with flat roof; and one storey plus attic for pitched roof.

9.6.2.5 *Special bond in brick walls*

For achieving full strength of masonry, the usual bonds specified for masonry should be followed so that the vertical joints are broken properly from course to course. To obtain full bond between perpendicular walls, it is necessary to make a sloping (stepped) joint by making the corners first to a height of 600 mm and then building the wall in between them. Otherwise the toothed joint should be made in both the walls, alternatively in lifts of about 450 mm (*see* Fig. 20).

9.6.3 *Stone Masonry (Random Rubble or Half-Dressed)*

9.6.3.1 The construction of stone masonry of random rubble or dressed stone type should generally follow good practice [6-4(14)].

9.6.3.2 The mortar should be cement-sand (1:6), lime sand (1:3) or clay mud of good quality.

9.6.3.3 The wall thickness '*t*' should not be larger than 450 mm. Preferably it should be about 350 mm, and the stones on the inner and outer wythes should be interlocked with each other.

NOTE — If the two wythes are not interlocked, they tend to delaminate during ground shaking, bulge apart (*see* Fig. 49) and buckle separately under vertical load leading to complete collapse of the wall and the building.

9.6.3.4 The masonry should preferably be brought to courses at not more than 600 mm lift.

9.6.3.5 'Through' stones of full length equal to wall thickness should be used in every 600 mm lift at not more than 1.2 m apart horizontally. If full length stones are not available, stones in pairs each of about ¾ of the wall thickness may be used in place of one full length stone so as to provide an overlap between them (*see* Fig. 50).

9.6.3.6 In place of 'through' stones, 'bonding elements' of steel bars 8 mm to 10 mm diameter bent to S-shape or as hooked links may be used with a cover of 25 mm from each face of the wall (*see* Fig. 50). Alternatively, wood bars of 38 mm × 38 mm cross-section or concrete bars of 50 mm × 50 mm section with an 8 mm diameter rod placed centrally may be used in place of 'through' stones. The wood should be well treated with preservative so that it is durable against weathering and insect action.

9.6.3.7 Use of 'bonding' elements of adequate length should also be made at corners and junctions of walls to break the vertical joints and provide bonding between perpendicular walls.

9.6.3.8 Height of the stone masonry walls (random rubble or half-dressed) should be restricted as follows, with storey height to be kept 3.0 m maximum, and span of walls between cross walls to be limited to 5.0 m:

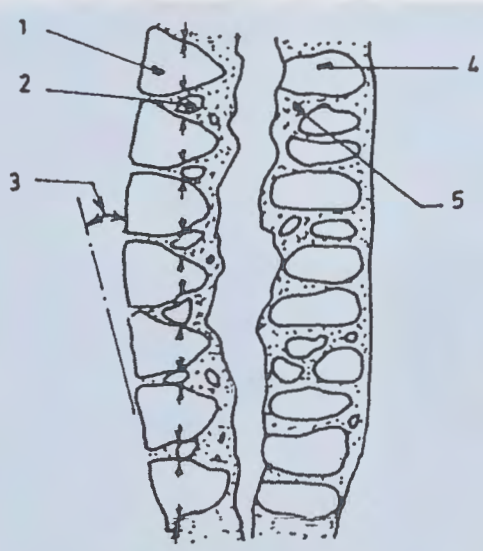

1. HALF-DRESSED CONICAL STONE
2. SMALL ALIGNMENT
3. ROTATION OF WYTHE
4. RANDOM RUBBLE
5. MUD OR WEAK LIME MORTARY

FIG. 49 WALL DELAMINATED WITH BUCKLED WYTHES

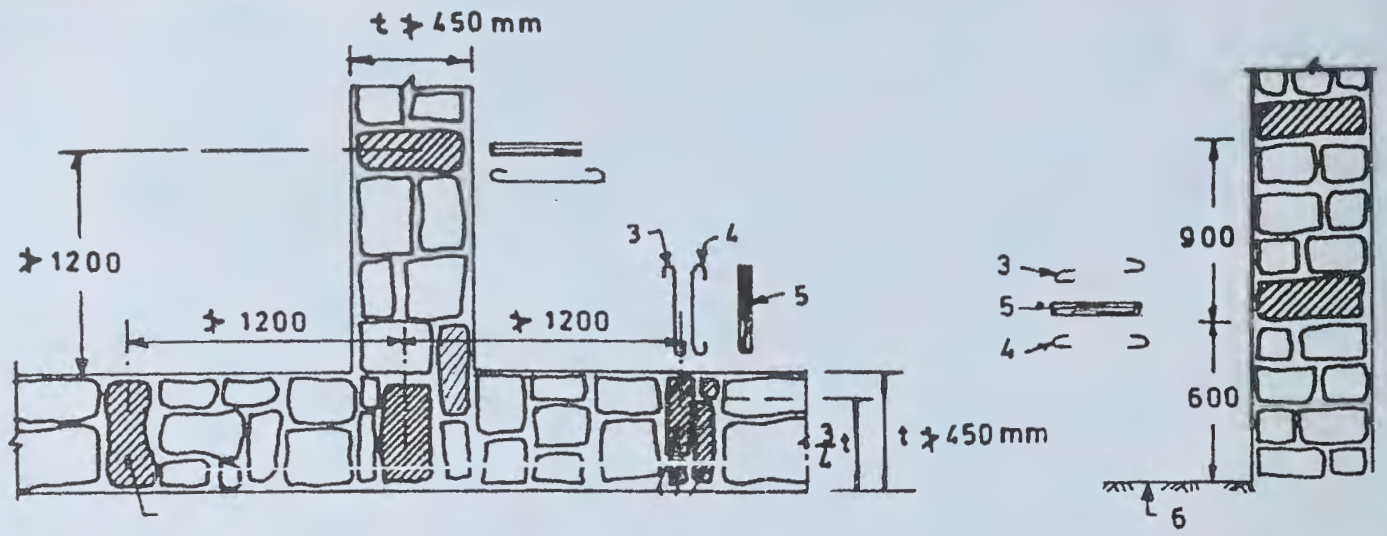

50A SECTIONAL PLAN OF WALL

50B CROSS-SECTION OF WALL

1. THROUGH STONE
2. PAIR OF OVERLAPPING STONE
3. S-SHAPE TIE
4. HOOKED TIE
5. WOOD PLANK
6. FLOOR LEVEL

FIG. 50 THROUGH STONE AND BAND ELEMENTS

a) *For category B* — Two storeys with flat roof or one storey plus attic, if walls are built in lime-sand or mud mortar; and one storey higher if walls are built in cement-sand 1:6 mortar.

b) *For categories C and D* — Two storeys with flat roof or two storeys plus attic for pitched roof, if walls are built in 1:6 cement mortar; and one storey with flat roof or one storey plus attic, if walls are built in lime-sand or mud mortar, respectively.

9.6.3.9 If walls longer than 5 m are needed, buttresses may be used at intermediate points not farther apart than 4.0 m. The size of the buttress be kept of uniform thickness. Top width should be equal to the thickness of main wall, t, and the base width equal to one sixth of wall height.

9.6.4 *Opening in Bearing Walls*

9.6.4.1 Door and window openings in walls reduce their lateral load resistance and hence should preferably, be small and more centrally located. The size and position of openings shall be as given in Table 25 and Fig. 21.

9.6.4.2 Openings in any storey shall preferably have their top at the same level so that a continuous band could be provided over them including the lintels throughout the building.

9.6.4.3 Where openings do not comply with the guidelines of Table 25, they should be strengthened by providing reinforced concrete lining as shown in Fig. 22 with 2 high strength deformed steel bars of 8 mm diameter.

9.6.4.4 The use of arches to span over the openings is a source of weakness and shall be avoided, otherwise, steel ties should be provided.

Table 25 Size and Position of Openings in Bearing Walls (*see* Fig. 21)

(*Clauses* 9.6.4.1 *and* 9.6.4.3)

Sl No.	Description	Building Category	
		B and C	*D*
(1)	(2)	(3)	(4)
i)	Distance b_5 from the inside corner of outside wall, *Min*, mm	230	600
ii)	Total length of openings, ratio; *Max* : $(b_1 + b_2 + b_3)/l_1$ or $(b_6 + b_7)/l_2$ shall not exceed:		
	a) one storeyed building	0.46	0.42
	b) 2 and 3 storeyed building	0.37	0.33
iii)	Pier width between consecutive openings, b_4, mm	450	560
iv)	Vertical distance between two openings one above the other, h_3, *Min*, mm	600	600
v)	Width of opening of ventilator, b_8, *Max*, mm	750	750

9.6.5 *Seismic Strengthening Arrangements*

9.6.5.1 All buildings to be constructed of masonry shall be strengthened by the methods as specified for various categories of buildings, listed in Table 26 and detailed in subsequent clauses. Figure 23 and Fig. 24 show, schematically, the overall strengthening arrangements to be adopted for category *D* buildings, which consist of horizontal bands of reinforcement at critical levels and vertical reinforcing bars at corners and junctions of walls.

9.6.5.2 Lintel band is a band provided at lintel level on all internal and external longitudinal as well as cross walls except partition walls. The details of the band are given in **9.6.5.5**.

Table 26 Strengthening Arrangements Recommended for Low Strength Masonry Buildings

(*Clause* 9.6.5.1)

Sl No. (1)	Building Category (2)	Number of Storeys (3)	Strengthening to be Provided (4)
i)	B	1 and 2	b,c,f,g
		3	b,c,d,f,g
ii)	C	1	b,c,f,g
		2 and 3	b,c,d,f,g
iii)	D	1 and 2	b,c,d,f,g

where

b = Lintel band (*see* **9.6.5.2**).

c = Roof band and gable band where necessary (*see* **9.6.5.3** *and* **9.6.5.4**).

d = Vertical steel at corners and junctions of walls (*see* **9.6.5.7**).

f = Bracing in plan at tie level of pitched roofs (*see* **9.3.2.2.2**).

g = Plinth band, where necessary (*see* **9.6.5.6**).

NOTE — For building of category *B* in two storeys constructed with stone masonry in weak mortar, it will be desirable to provide vertical steel of 10 mm dia in both storeys.

9.6.5.3 Roof band is a band provided immediately below the roof or floors. The details of the band are given in **9.6.5.5**. Such a band need not be provided underneath reinforced concrete or reinforced brick slabs resting on bearing walls, provided that the slabs cover the width of end walls fully.

9.6.5.4 Gable band is a band provided at the top of gable masonry below the purlins. The details of the band are given in **9.6.5.5**. This band shall be made continuous with the roof band at the eaves level.

9.6.5.5 *Details of band*

9.6.5.5.1 *Reinforced band*

The band should be made of reinforced concrete of grade not leaner than M15 or reinforced brickwork in cement mortar not leaner than 1:3. The bands should be of full width of the wall, not less than 75 mm in depth and should be reinforced with 2 high strength deformed steel bars of 8 mm diameter and held in position by 6 mm diameter bar links, installed at 150 mm apart as shown in Fig. 25.

NOTES

1 In coastal areas. the concrete grade shall be of grade in accordance with Part 6 'Structural Design, Section 5 Concrete' of the Code and the filling mortar of 1:3 ratio (cement-sand) with water proofing admixture.

2 In case of reinforced brickwork, the thickness of joints containing steel bars should be increased to 20 mm so as to have a minimum mortar cover of 6 mm around the bar. In bands of reinforced brickwork, the area of steel provided should be equal to that specified above for reinforced concrete bands.

3 For full integrity of walls at corners and junctions of walls and effective horizontal bending resistance of bands, continuity of reinforcement is essential. The details as shown in Fig. 25 are recommended.

9.6.5.5.2 *Wooden band*

As an alternative to reinforced band, the lintel band could be provided using wood beams in one or two parallel pieces with cross elements as shown in Fig. 51.

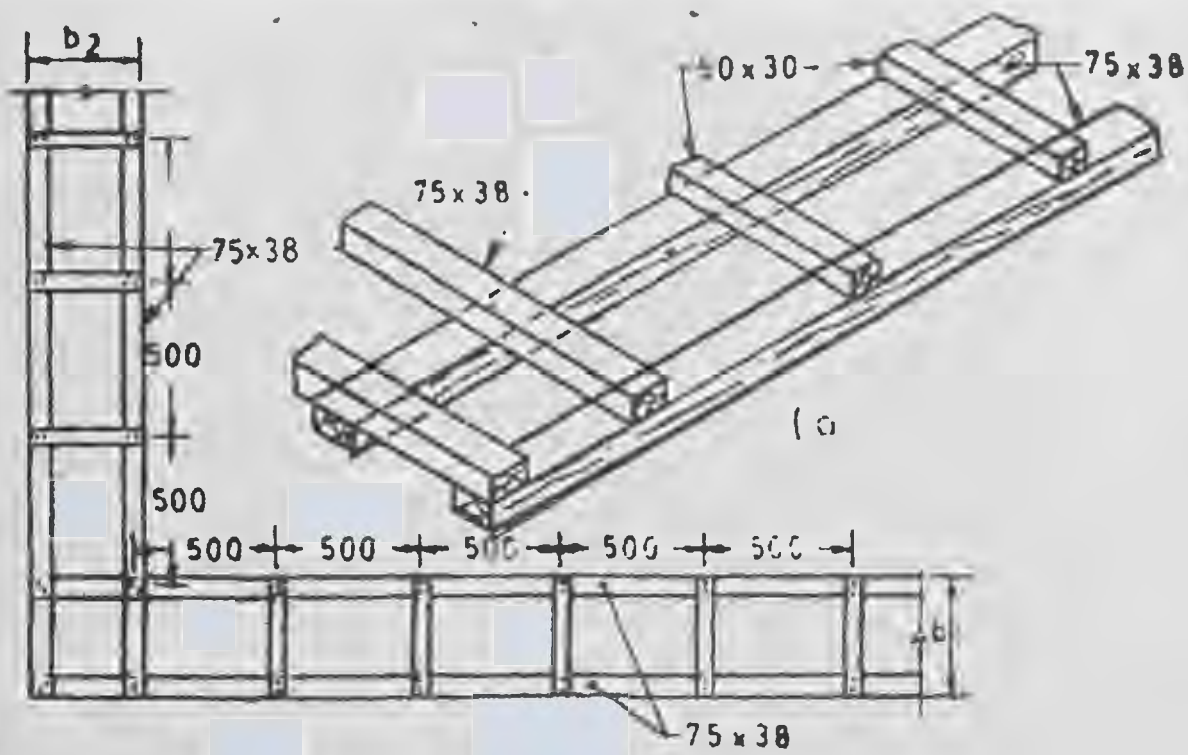

51A PERSPECTIVE VIEW

51B PLAN OF BAND

All dimensions in millimetres.

FIG. 51 WOODEN BAND FOR LOW-STRENGTH MASONRY BUILDINGS

9.6.5.6 Plinth band is a band provided at plinth level of walls on top of the foundation wall. This is to be provided where strip footings of masonry (other than reinforced concrete or reinforced masonry) are used and the soil is either soft or uneven in its properties as frequently happens in hill tracts. Where used, its section may be kept same as in **9.6.5.5.1**. This band serves as damp proof course as well.

9.6.5.7 *Vertical reinforcement*

Vertical steel at corners and junctions of walls which are up to 350 mm thick should be provided as specified in Table 27. For walls thicker than 350 mm, the area of the bars should be proportionately increased.

9.6.5.7.1 The vertical reinforcement should be properly embedded in the plinth masonry of foundations and roof slab or roof band so as to develop its tensile strength in bond. It should pass through the lintel bands and floor slabs or floor level bands in all storeys. Bars in different storeys may be welded or suitably lapped.

NOTES

1 Typical details of providing vertical steel in brickwork at corners and T-junctions are shown in Fig. 26.

2 For providing vertical bar in stone masonry, use of a casing pipe is recommended around which masonry be built to height of 600 mm (*see* Fig. 52). The pipe is kept loose by rotating it during masonry construction. It is then raised and the cavity below is filled with M15 (or 1:2:4) grade of concrete mix and rodded to compact it.

Table 27 Vertical Steel Reinforcement in Low Strength Masonry Walls

(*Clause* 9.6.5.7)

Sl No.	No. of Storeys	Storey	Diameter of HSD Single Bar; in mm, at Each Critical Section for		
			Category B	Category C	Category D
(1)	(2)	(3)	(4)	(5)	(6)
i)	One	—	Nil	Nil	10
ii)	Two	a) Top	Nil	10	10
		b) Bottom	Nil	10	12
iii)	Three	a) Top	10	10	10
		b) Middle	10	10	12
		c) Bottom	12	12	12

NOTES

1 The diameters given above are for high strength deformed bars with yield strength 415 MPa. For mild-steel plain bars, use equivalent diameters.

2 The vertical bars should be covered with concrete of M15 grade or with mortar 1:3 (cement-sand) in suitably created pockets around the bars (*see* Fig. 26 and Fig. 52). This will ensure their safety from corrosion and good bond with masonry.

3 For category *B* two storey stone masonry buildings, *see* Note under Table 25.

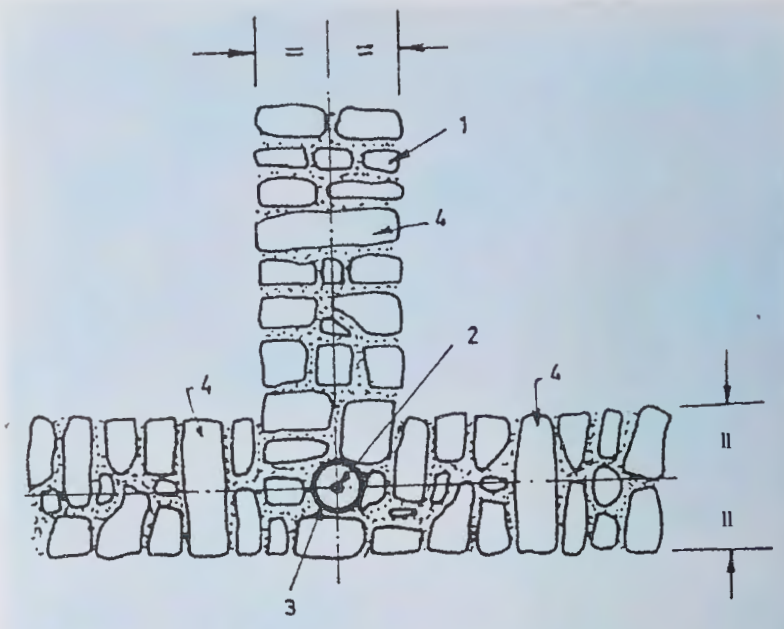

1. STONE WALL
2. VERTICAL STEEL BAR
3. CASING PIPE
4. THROUGH STONE OR BONDING ELEMENT

FIG. 52 TYPICAL CONSTRUCTION DETAIL FOR INSTALLING VERTICAL STEEL BAR IN RANDOM RUBBLE STONE MASONRY

10 REINFORCED MASONRY

10.1 General

This Section gives the recommendations for structural design aspect of reinforced load bearing and non-load bearing walls, constructed with solid or perforated burnt clay bricks, sand-lime bricks, stones, concrete blocks, lime based blocks or burnt clay hollow blocks in regard to the materials to be used, maximum permissible stresses and methods of design.

10.2 Terminology

For the purpose of **10**, the definitions given below shall apply.

10.2.1 *Cross-Sectional Area of Masonry Unit* — Net cross-sectional area of a masonry unit shall be taken as the gross cross-sectional area minus the area of cellular space. Gross cross-sectional area of cored units shall be determined to the outside of the coring but cross-sectional area of grooves shall not be deducted from the gross cross-sectional area to obtain the net cross-sectional area

10.2.2 *Grout* — A mixture of cement, sand and water of pourable consistency for filling small voids.

10.2.3 *Grouted Masonry*

10.2.3.1 *Grouted hollow-unit masonry* — That form of grouted masonry construction in which certain designated cells of hollow units are continuously filled with grout.

10.2.3.2 *Grouted multi-wythe masonry* — That form of grouted masonry construction in which the space

between the wythes is solidly or periodically filled with grout.

10.2.4 *Joint Reinforcement* — A prefabricated reinforcement in the form of lattice truss which has been hot dip galvanized after fabrication and is to be laid in the mortar bed joint.

10.2.5 *Pier* — It is an isolated vertical member whose horizontal dimension measured at right angles to its thickness is not less than 4 times its thickness and whose height is less than 5 times its length.

10.2.6 *Prism* — An assemblage of masonry units bonded by mortar with or without grout used as a test specimen for determining properties of masonry.

10.2.7 *Reinforced Masonry* — Masonry which is reinforced to the minimum requirements of this Section and grouted so that the two materials act together in resisting forces.

10.2.8 *Grouted Cavity Reinforced Masonry* — Two parallel single leaf walls spaced at least 50 mm apart, effectively tied together with wall ties. The intervening cavity contains steel reinforcement and is filled with infill concrete so as to result in common action with masonry under load.

10.2.9 *Pocket Type Reinforced Masonry* — Masonry reinforced primarily to resist lateral loading where the main reinforcement is concentrated in vertical pockets formed in the tension face of the masonry and is surrounded by in situ concrete.

10.2.10 *Quetta Bond Reinforced Masonry* — Masonry at least one and half units thick in which vertical pockets containing reinforcement and mortar or concrete infill occur at intervals along its length.

10.2.11 *Specified Compressive Strength of Masonry* — Minimum Compressive strength, expressed as force per unit of net cross-section area, required of the masonry used in construction by the contract document, and upon the project design is based. Whenever the quantity f_m is under the radical sign, the square root of numerical value only is intended and the result has units of MPa.

10.2.12 *Wall Tie* — A metal fastener which connects wythes of masonry to each other or to other materials.

10.2.13 *Wythe* — A continuous vertical tie of masonry one unit in thickness.

10.3 Materials

10.3.1 *Masonry Units*

10.3.1.1 Masonry units shall be bricks, blocks or stones conforming to relevant Indian Standards. Masonry units that have been previously used shall not be reused in brickwork or block work construction, unless they have been thoroughly cleaned and conform to the code for similar new masonry units. The minimum compressive strength of masonry units used for reinforced masonry shall be 7 MPa.

10.3.1.2 The shape and dimension of masonry units, construction practices, including methods of positioning of reinforcement, placing and compacting of grout, as well as design and detailing should be such as to promote homogeneity of structural members, development of the bond of the grout to both reinforcement and masonry units and avoidance of corrosion of reinforcement.

10.3.2 *Concrete*

For reinforced masonry M20 grade of cement concrete (minimum cover 15 mm at top and bottom and 20 mm side cover) shall be used to ensure transfer of internal forces from steel reinforcement to masonry.

NOTE — In case cover is less or mortar is put in mortar bed, necessary precaution against corrosion shall be provided as per **10.5.10.2**. High strength mortars (H1 and H2) shall be used in mortar bed.

10.3.3 *Reinforcement*

Steel reinforcement of grade Fe 415 or less only shall be used (*see also* Note under **10.5.2.1**). Deformed bar shall be used.

10.3.4 *Material Properties*

10.3.4.1 *General*

Unless otherwise determined by test, the following modulus shall be used in determining the effects of elasticity.

10.3.4.2 *Elastic modulus*

For steel reinforcement, $E_s = 200$ GPa $= 2.0 \times 10^5$ MPa

For clay masonry and concrete masonry, $E_m = 550 f_m$

or the chord modulus of elasticity taken between 0.05 and 0.33 of the maximum compressive strength of each prism determined by test in accordance with Annex B.

10.3.4.3 *Shear modulus*

For clay and concrete masonry, the shear modulus is 0.4 times the elastic modulus.

10.4 Design Considerations

10.4.1 *General*

Design considerations shall be as per **4** along with the following provisions.

10.4.2 *Structural Continuity*

Intersecting structural elements intended to act as a unit shall be joined together to resist the design forces. Walls shall be joined together to all floors, roofs or other

elements which provide lateral support for the wall. Where floors or roofs are designed to transmit horizontal forces to walls, the anchorages to the walls shall be designed to resist the horizontal forces.

10.4.3 *Effective Span*

10.4.3.1 The effective span of simply supported/ continuous members may be taken as the smaller of the following:

a) Distance between centres of supports.

b) Clear distance between supports plus an effective depth, d.

10.4.3.2 Effective span of a cantilever shall be taken as,

a) distance between the end of cantilever and the centre of its support; and

b) distance between the end of cantilever and the face of support plus half its effective depth, whichever is greater.

10.4.4.1 *Wall*

Slenderness ratio (ratio of effective height h_{ef} to effective thickness t_{ef}) should not exceed 27 for vertically loaded reinforced masonry walls in their plane.

For reinforced masonry members such as walls subjected to out-of-plane bending and for beams as a part of wall subjected to bending in the plane of the wall, the maximum effective span to effective depth shall be as given in Table 28.

Table 28 Maximum Effective Span to Effective Depth for Walls Subjected to Out-of-Plane Bending

(*Clause* 10.4.4.1)

Sl No.	Boundary Conditions	Maximum Effective Span to Effective Depth (l_{ef}/d) or Effective Thickness Ratios (l_{ef}/t_{ef})	
		Wall Subjected to Out-of-Plane Bending	Beam Part of Wall Subjected to In-Plane Bending
(1)	(2)	(3)	(4)
i)	Simply-supported	35	20
ii)	Continuous	45	26
iii)	Spanning in two directions	45	—
iv)	Cantilevered	18	7

10.4.4.2 *Columns*

For a column, slenderness ratio shall be taken to be the greater of the ratios of effective heights to the respective effective thickness in the two principal directions. Slenderness ratio for a load bearing unreinforced column shall not exceed 15 whereas for reinforced column the slenderness ratio should be limited to 20.

10.4.5 *Minimum Design Dimensions*

10.4.5.1 *Minimum thickness of load bearing walls columns*

The nominal thickness of masonry bearing walls in building shall not be less than 230 mm.

10.4.5.2 *Parapet wall*

Parapet walls shall be at least 200 mm thick and height shall not exceed 3 times the thickness. The parapet wall shall not be thinner than the wall below.

10.4.6 *Eccentricity in Columns*

Columns shall be designed for a minimum eccentricity of 10 percent of side dimension for each axis in addition to applied loads.

10.5 Requirements Governing Reinforcement and Detailing

10.5.1 *General*

This section provides requirements for the working (allowable) stress design of masonry structure neglecting the contribution of tensile strength of masonry.

10.5.1.1 Members are designed for composite action, stresses shall be computed using transformed area concept of linear elastic analysis as follows:

$$A_t = A_b + m A_s$$

where

A_t = total transformed cross-sectional area of the member,

A_b = cross-sectional area of brick,

A_s = cross-sectional area of reinforcement, and

m = modular ratio of steel reinforcement and brick.

10.5.1.2 Stiffness calculation shall be based on uncracked section properties.

10.5.2 *Steel Reinforcement-Allowable Stresses*

10.5.2.1 *Tension*

Tensile stress in reinforcement shall not exceed the following:

a) MS bars confirming to accepted standard [6-4(18)]
   1) 140 MPa for diameter ≤ 20 mm
   2) 130 MPa for diameter > 20 mm

b) HYSD bars confirming to accepted standard [6-4(19)] — 230 MPa

NOTE — For high yield strength deformed bars of Grade Fe 500 the permissible stress shall be 0.55 f_y; where f_y= characteristics strength of steel.

10.5.2.2 *Compression*

Compressive stress in rcinforcement shall not exceed the following:

a) MS bars confirming to confirming to accepted standard [6-4(18)] : 130 MPa

b) HYSD bars confirming to accepted standard [6-4(19)] : 190 MPa

10.5.3 *Size of Reinforcement*

a) The maximum size of reinforcement used in masonry shall be 25 mm diameter bars and minimum size shall not be less than 8 mm.

b) The diameter of reinforcement shall not exceed one-half the least clear dimension of the cell, bond beam, or collar joint in which it is placed.

10.5.4 *Spacing of Reinforcement*

a) Clear distance between parallel bars shall not be less than the diameter of the bars, or less than 25 mm.

b) In columns and pilasters, clear distance between vertical bars shall not be less than 1.5 times the bar diameter, nor less than 35 mm.

10.5.5 *Anchorage*

10.5.5.1 *Development length of bars*

The development length L_d for deformed bars conforming to accepted standard [6-4(19)] shall be given by the following equation but shall not be less than 300 mm:

$$L_d = 0.25\, d_b F_s$$

where

d_b = nominal diameter of bar (mm), and

F_s = permissible tensile/compressive stress in steel (MPa).

10.5.5.2 For MS bars and epoxy coated bars L_d shall be increased by 60 percent.

10.5.5.3 *Standard hooks*

a) Standard hooks shall be formed by one of the following methods (*see* Fig. 53):

1) 180° turn plus extension of at least 4 bar diameters but not less than 64 mm at free end of bar.

2) A 90° turn plus extension of at least 10 bar diameters at free end of bar.

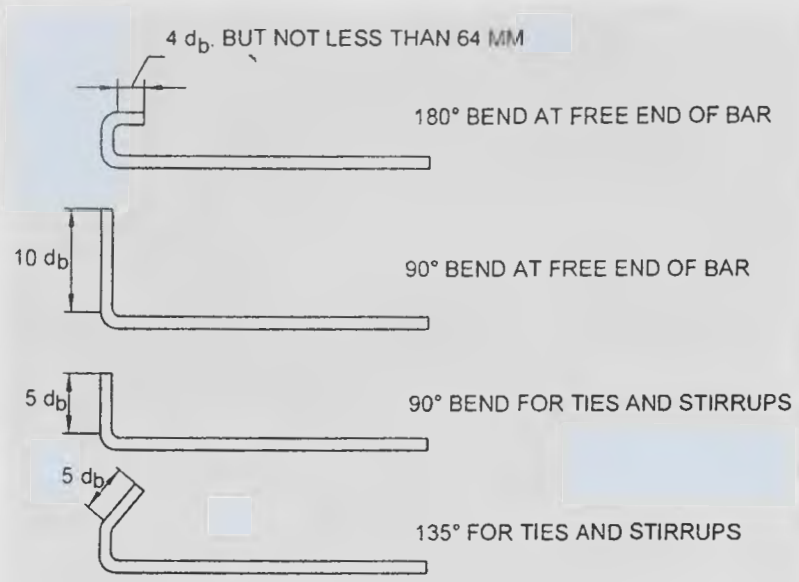

FIG. 53 STANDARD HOOK

3) For stirrup and tie anchorage only a 90° or a 135° turn plus an extension of at least 5 bar diameters at the free end of the bar.

b) The diameter of bend, measured to the inside of the bar other than stirrups and ties, shall not be less than 5 bar diameters for 6 mm through 20 mm diameter bars. For 25 mm bars through 40 mm, a minimum bend diameter of 6 times bar diameters shall be used.

c) Inside diameter of bend for 12 mm diameter or smaller stirrups and ties shall not be less than 4 bar diameters. Inside diameter of bend for 16 mm diameter or larger stirrups and ties shall not be less than that given in (b).

d) Hooks shall not be permitted in the tension portion of any beam, except at the ends of simple or cantilever beams or at the freely supported ends of continuous or restrained beams.

10.5.5.4 *Anchorage of reinforcing bars*

a) Deformed bars may be used without end anchorages provided development length requirement is satisfied. Hooks should normally be provided for plain bars in tension.

b) Bends and hooks shall conform to accepted standard [6-4(20)] and shall be provided as follows :

1) *Bends* — The anchorage value of bend shall be taken as 4 times the diameter of the bar for each 45° bend subject to a maximum of 16 times the diameter of the bar.

2) *Hooks* — The anchorage value of a standard U-type hook shall be equal to 16 times the diameter of the bar.

c) For stirrups and transverse ties complete development length and anchorage shall be deemed to have been provided when the bar is provided with standard hook as described in **10.5.5.3.**

10.5.6 *Lap Splices*

10.5.6.1 Where splices are provided in the reinforcing bars, they shall as far as possible be away from the sections of maximum stress and be staggered. It is recommended that splices in flexural members should not be at sections where the bending moment is more than 50 percent of the moment of resistance; and not more than half the bars shall be spliced at a section. Where more than one-half of the bars are spliced at a section or where splices are made at points of maximum stress, special precautions shall be taken, such as increasing the length of lap and/or using spirals or closely-spaced stirrups around the length of the splice.

10.5.6.2 Lap length including anchorage value of hooks for bars in flexural tension shall be L_d (see **10.5.5.1**) or $30d_b$, whichever is greater and for direct tension shall be $2L_d$ or $30d_b$, whichever is greater. The straight length of the lap shall not be less than $15d_b$ or 200 mm.

The following provisions shall also apply:

a) Where lap occurs for a tension bar located at:
   1) Top of a section as cast and the minimum cover is less than twice the diameter of the lapped bar, the lap length shall be increased by a factor of 1.4.
   2) Corner of a section and the minimum cover to either face is less than twice the diameter of the lapped bar or where the clear distance between adjacent laps is less than 75 mm or 6 times the diameter of lapped bar, whichever is greater, the lap length should be increased by a factor of 1.4.

b) Where both condition (1) and (2) apply, the lap length should be increased by a factor of 2.0.

NOTE — Splices in tension members shall been enclosed in spirals made of bars not less than 6 mm diameter with pitch not more than 100 mm.

10.5.7 *Curtailment of Tension Reinforcement*

In any member subjected to bending, every reinforcing bar should extend, except at end supports, beyond the point at which it is no longer needed, for a distance equal to the effective depth of the member or 12 times the diameter of the bar, whichever is the greater. The point at which reinforcement is theoretically no longer needed is where the design resistance moment of the section, considering only the continuing bars, is equal to the applied design moment. However, reinforcement should not be curtailed in a tension zone unless at least one of the following conditions is satisfied for all arrangements of design load considered:

a) Reinforcing bars extend at least the anchorage length appropriate to their design strength from the point at which they are no longer required to resist bending;

b) Design shear capacity at the section where the reinforcement stops is greater than twice the shear force due to design loads, at that section;

c) Continuing reinforcing bars at the section where the reinforcement stops provide double the area required to resist the bending moment at that section.

Where there is little or no end fixity for a member in bending, at least 25 percent of the area of the tension reinforcement required at mid-span should be carried through to the support. This reinforcement may be anchored in accordance with **10.5.5.4**, or by providing,

1) an effective anchorage length equivalent to 12 times the bar diameter beyond the centre line of the support, where no bend or hook begins before the centre of the support, or

2) an effective anchorage equivalent to 12 times the bar diameter plus $d/2$ from the face of the support, where d is the effective depth of the member, and no bend begins before $d/2$ inside the face of the support.

Where the distance from the face of a support to the nearer edges of a principal load is less than twice the effective depth, all the main reinforcement in a member subjected to bending should continue to the support and be provided with an anchorage equivalent to 20 times the bar diameter.

10.5.8 *Members Subjected to Flexure and Axial Forces*

10.5.8.1 A member which is subjected to axial stress less than $0.1 f_m$, may be designed for bending only.

10.5.8.2 *Beams*

Reinforcement in masonry designed as beam should be provided over a support where the masonry is continuous, whether the beam has been designed as continuous or not. Where this occurs, an area of steel not less than 50 percent of the area of the tension reinforcement required at mid-span should be provided in the top of the masonry over the support and anchored in accordance with **10.5.5.4**. In all cases at least one quarter of the reinforcement required at mid-span should be carried through to the support and similarly anchored.

10.5.8.3 *Columns*

Design of reinforced column shall meet the requirements of this Section.

10.5.8.3.1 Vertical reinforcement shall not be less than 0.25 percent nor exceed 4 percent of the net area of column cross-section. The minimum number of bars shall be four.

10.5.8.3.2 *Lateral ties*

Lateral ties shall be provided in the column as per the following:

a) Longitudinal reinforcement shall be enclosed by lateral ties of at least 6 mm diameter. Vertical spacing of ties along the length of column shall be lesser of,

   1) 16 times diameter of longitudinal bar,

   2) 48 times diameter of lateral tie, and

   3) Least dimension of the column.

b) Arrangement of lateral ties is such that every corner and alternate longitudinal bar shall have lateral support provided by the corner of a lateral tie with an included angle of not more than 135°.

10.5.9 *Members Subjected to Shear*

10.5.9.1 Reinforced masonry walls may be designed taking contribution of shear reinforcement.

10.5.9.2 Where contribution of shear reinforcement is considered in resisting shear force the minimum area of shear reinforcement in the direction of force shall be determined by the following:

$$A_{v,min} = \frac{V_s}{F_s d}$$

where

V = total applied shear force,

s = spacing of the shear reinforcement,

d = distance from extreme compression fibre to centroid of tension reinforcement, and

F_s = permissible stress in steel reinforcement as defined in **10.5.2**.

10.5.9.3 The maximum spacing of shear reinforcement shall not be greater than 0.5*d* or 1.2 m, whichever is lesser.

10.5.9.4 In cantilever beams maximum shear shall be used whereas for members subjected to uniformly distributed load it may be assumed that maximum shear load occurs at a distance of 0.5*d* from the face of support when the following conditions are met:

a) Support reaction causes compression in the end region of the member, and

b) No concentrated load between face of support and a distance of 0.5*d* from it.

10.5.10 *Reinforcement Detailing*

10.5.10.1 *General*

Reinforcement shall be located such that it acts compositely with the masonry and various ways in which it can be used in reinforced masonry are shown in Fig. 54.

10.5.10.2 *Protection of reinforcement*

Where steel reinforcing bars are embedded in filled cavity (or pockets) or special bond construction, the bars shall have the minimum clear cover of 10 mm in mortar or a minimum clear cover 15 mm or bar diameter, whichever is more in cement concrete (grout) so as to achieve good bond and corrosion resistance.

For the reinforcement steel placed in mortar bed joint, the minimum depth of mortar cover from the reinforcing steel to the face of masonry should be 15 mm. Also mortar cover above and below reinforcement placed in bed joints should not be less than 2 mm.

Reinforcing steel shall be corrosion resistant or protected adequately against corrosion. Reinforcement shall be stainless steel or hot-dipped galvanized or epoxy coated steel reinforcement for protection against corrosion. As an alternative to solid stainless steel, normal steel reinforcing bar can be coated with at least 1mm thickness of austenitic stainless steel.

10.6 Structural Design

10.6.1 *Permissible Compressive Force*

Compressive force in reinforced masonry due to axial load shall not exceed that given by following equation:

$$P_o = (0.25 f_m A_n + 0.65 A_{st} F_s) k_s$$

where

A_n = net area,

A_{st} = area of steel,

F_s = permissible steel tensile stress, and

k_s = stress reduction factor as given in Table 10.

10.6.1.1 *Effective compressive width for locally concentrated reinforcement* (*see* Fig. 55)

When the reinforcement in masonry is concentrated locally such that it cannot be treated as a flanged member, the reinforced section shall be considered as having a width of not more than,

a) centre-to-centre bar spacing, and

b) 6 times the wall thickness.

10.6.1.2 *Combined permissible axial and flexural compressive stress*

For reinforced members subjected to combined axial load and flexure, the compressive stress in masonry due to combine action of axial load and bending shall not exceed 1.25 F_a and compressive stress in masonry due to axial load only shall not exceed F_a. *See* Annex F.

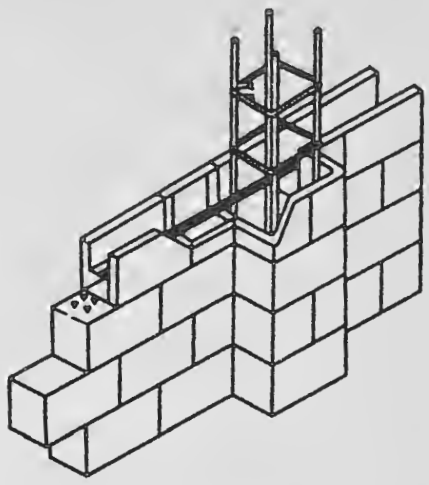

REINFORCED HOLLOW BLOCKWORK WALL

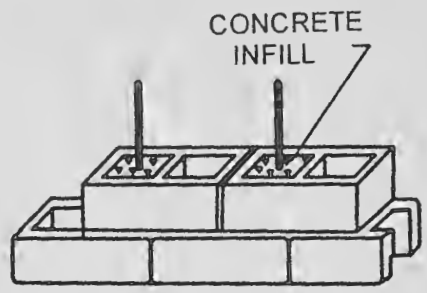

WALL WITH VERTICAL AND BED JOINT REINFORCEMENT

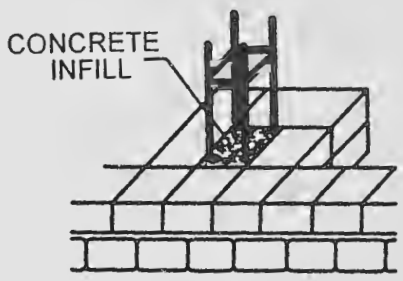

POCKET TYPE WALL

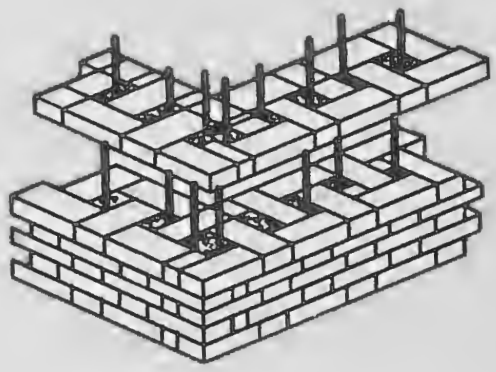

REINFORCING POCKETS FORMED BY BONDING ARRANGEMENTS - QUETTA BOND

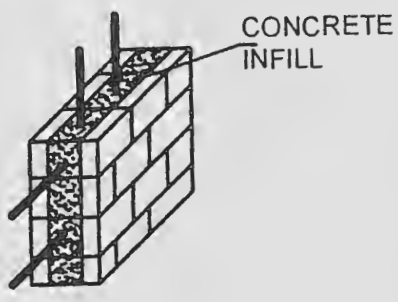

CONCRETE FILLED CAVITY WALL

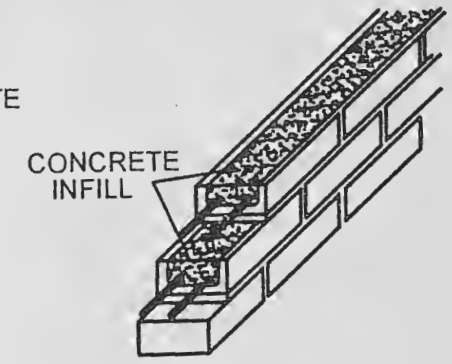

BEAM UNIT

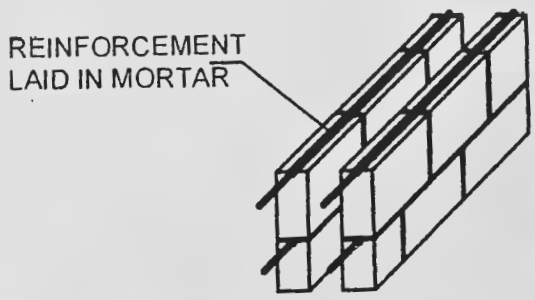

REINFORCEMENT PLACED IN THE BED JOINTS OF GROOVED UNIT

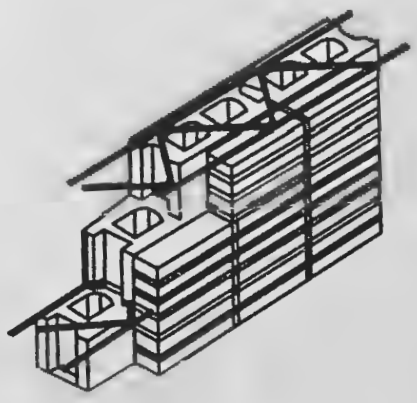

UNITS WITH BED JOINT REINFORCEMENT

FIG. 54 REINFORCEMENT DETAILS

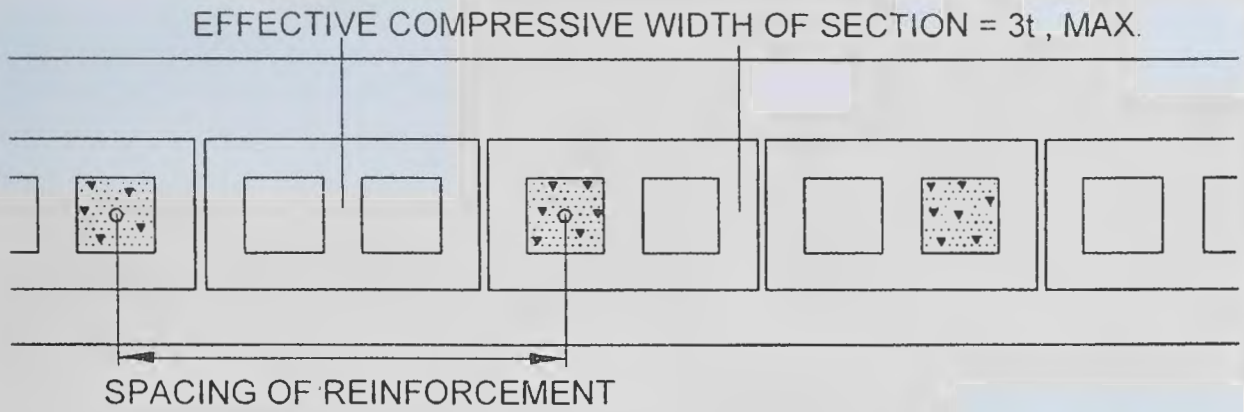

FIG. 55 EFFECTIVE COMPRESSIVE WIDTH

10.6.1.3 *Permissible tensile stress*

Provisions of **5.4.2** shall apply.

10.6.1.4 *Permissible shear stress*

For reinforced masonry members:

a) *For flexural members*

i) Without web reinforcement:

$F_v = 0.083\sqrt{f_m}$ but not greater than 0.25 MPa

ii) With web reinforcement:

$F_v = 0.25\sqrt{f_m}$ but not greater than 0.75 MPa

b) *For walls* — The allowable shear stress for reinforced masonry walls shall be according to Table 29.

Table 29 Allowable Shear Stress for Reinforced Masonry Shear Walls, F_v

[*Clause* 10.6.1.4(b)]

Sl No.	Type of Wall	M/Vd	F_v MPa	Maximum Allowable MPa
(1)	(2)	(3)	(4)	(5)
i)	Without web reinforcement	a) <1	$\frac{1}{36}\left(4-\frac{M}{Vd}\right)\sqrt{f_m}$	$\left(0.4-0.2\frac{M}{Vd}\right)$
		b) >1	$0.083\sqrt{f_m}$	0.2
ii)	With web reinforcement	<1	$\frac{1}{24}\left(4-\frac{M}{Vd}\right)\sqrt{f_m}$	$\left(0.6-0.2\frac{M}{Vd}\right)$

10.6.1.5 If there is tension in any part of a section of masonry, the area under tension shall be ignored while working out shear stress on the section.

10.7 Seismic Design Requirements

10.7.1 The requirements of this Section shall apply to the design and construction of reinforced masonry to improve its performance when subjected to earthquake loads. These provisions are in addition to general requirements of good practice [6-4(9)]. *See* Annex G.

10.7.2 *Different Performance Levels of Masonry Shear Walls*

Masonry buildings rely on masonry shear walls for the lateral load resistance and can be detailed for the following three levels of seismic performance, which can be appropriately chosen for a building considering its importance, location and acceptable degree of damage, etc. Table 30 summarizes the requirement for these shear walls and recommended *R*-values for use with good practice [6-4(9)].

Table 30 Reinforcement and *R*-Values for Different Wall Types in Various Seismic Zones

(*Clause* 10.7.2)

Sl No.	Type of Wall	Description	Reinforcement	Seismic Zone	R-Value
(1)	(2)	(3)	(4)	(5)	(6)
i)	A	URM with minimum reinforcement	As per **10.7.2.1** (a) to (c)	II and III	2.5
ii)	B	RM with minimum reinforcement	As per **10.7.2.1** (a) to (c) and requirements of ordinary reinforced masonry	IV and V	3.0
iii)	C	RM with minimum reinforcement and special reinforcement	As per **10.7.2.1** (a) to (c) and requirements of special reinforced masonry	IV and V	3.0

NOTE — *R*-value is given as per provision of good practice [6-4(9)].

10.7.2.1 *Detailed Unreinforced Masonry Shear Walls (Type A wall)*

Design of detailed unreinforced masonry shear walls shall comply with requirements of unreinforced masonry wall as per **4** and **5** and shall comply with the following requirements.

a) *Minimum reinforcement requirements* (*see* Fig. 56)

Vertical reinforcement of at least 100 mm² in cross-

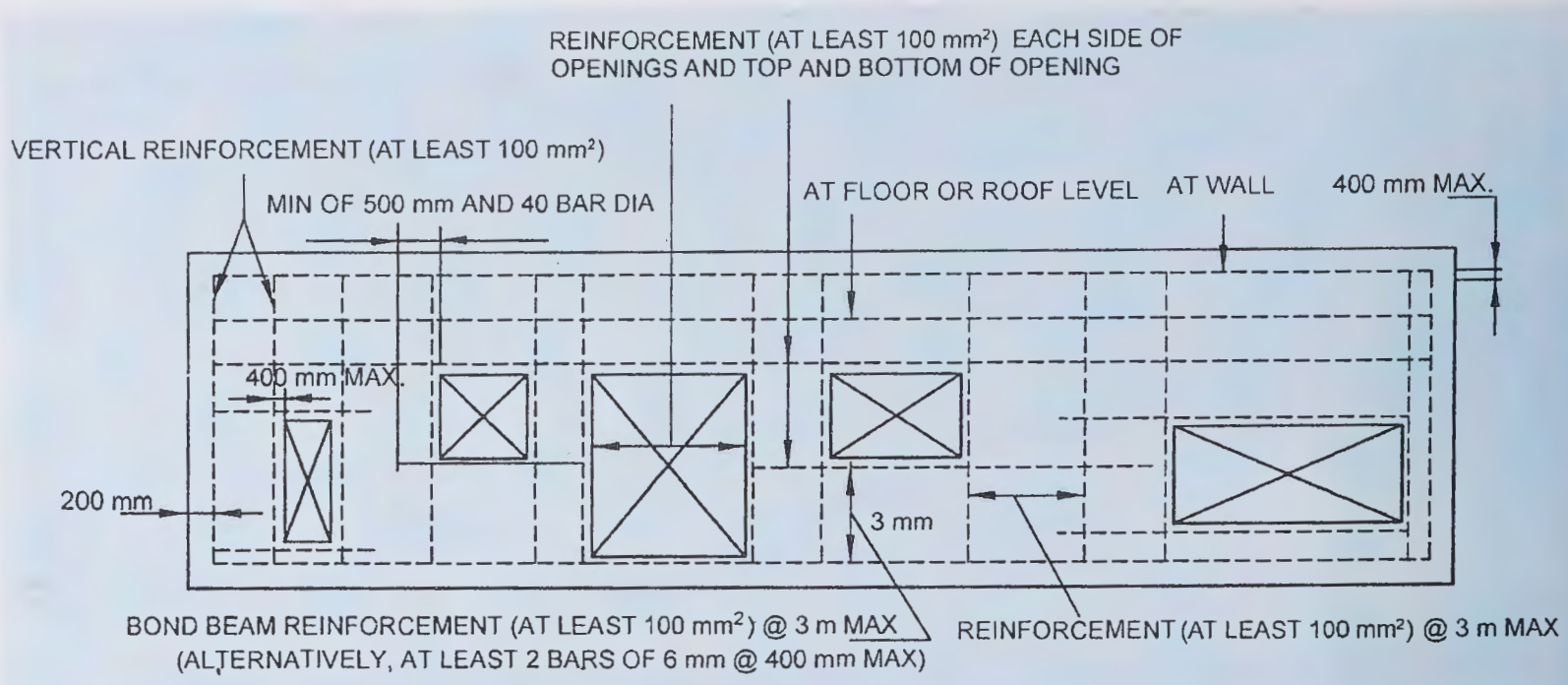

FIG. 56 PROVISION OF MINIMUM REINFORCEMENT

sectional area shall be provided at a maximum spacing of 3 m on centre at critical sections namely,

1) Corners,
2) Within 400 mm of each side of openings, and
3) Within 200 mm of the end of the walls.

b) Reinforcement around openings need not be provided for opening smaller than 400 mm in either direction.

c) Horizontal reinforcement shall consist of at least two bars of 6 mm spaced not more than 400 mm; or bond beam reinforcement shall be provided of at least 100 mm^2 in cross-sectional area spaced not more than 3 m. Horizontal reinforcement shall be provided at the bottom and top of wall openings and shall extend at least 500 mm or 40 bar diameters past the openings; continuously at structurally connected roof and floor levels and within 400 mm of the top of the walls.

10.7.2.2 *Ordinary reinforced masonry shear wall (Type B wall)*

Design of ordinary reinforced masonry shear walls shall comply with requirements of reinforced masonry wall as outlined in this document and shall comply with the requirements of section **10.7.2.1** (a) to (c).

10.7.2.3 *Special reinforced masonry shear wall (Type C wall)*

Design of special reinforced masonry shear wall shall comply with the requirement of reinforced masonry as outlined in this Section and the following.

a) The masonry shall be uniformly reinforced in both horizontal and vertical direction such that the sum of reinforcement area in both directions shall be at least 0.2 percent of the gross cross-sectional area of the wall and minimum reinforcement area in each direction shall be not less than 0.07 percent of the gross cross-sectional area of the wall.

b) Maximum spacing of horizontal and vertical reinforcement shall be lesser of,
   1) one-third length of shear wall,
   2) one-third height of shear wall, and
   3) 1.2 m.

c) Minimum cross-sectional area of reinforcement in vertical direction shall be one-third of the required shear reinforcement.

d) Shear reinforcement shall be anchored around vertical reinforcing bars with a 135° or 180° standard hook.

11 MASONRY WALLS USING RAT-TRAP BOND TECHNOLOGY

This type of masonry shall be applicable for masonry structures of not more than 2 storeys constructed in Seismic Zones II and III. For buildings in other Seismic Zones, this type of masonry wall shall be used only in non-load bearing applications such as partition walls. The provisions for this type of masonry shall be as given in Annex H.

12 NOTATIONS AND SYMBOLS

The various notations and letter symbols used in the text of the Section shall have the meaning as given in Annex J.

ANNEX A

(*Clause* 4.7)

SOME GUIDELINES FOR ASSESSMENT OF ECCENTRICITY OF LOADING ON WALLS

A-1 Where a reinforced concrete roof and floor slab of normal span (not exceeding 30 times the thickness of wall) bear on external masonry walls, the point of application of the vertical loading shall be taken to be at the centre of the bearing on the wall. When the span is more than 30 times the thickness of wall, the point of application of the load shall be considered to be displaced from the centre of bearing towards the span of the floor to an extent of one-sixth the bearing width.

A-2 In case of a reinforced concrete slab of normal span (that is, less than 30 times the thickness of the wall), which does not bear on the full width of the wall and 'cover tiles or bricks' are provided on the external face, there is some eccentricity of load. The eccentricity may be assumed to be one-twelfth of the thickness of the wall.

A-3 Eccentricity of load from the roof/floor increases with the increase in flexibility and thus deflection of the slabs. Also, eccentricity of loading increases with the increase in fixity of slabs/beams at supports. Precast RCC slabs are better than *in-situ* slabs in this regard because of very little fixity. If supports are released before further construction on top, fixity is reduced.

A-4 Interior walls carrying continuous floors are assumed to be axially loaded except when carrying very flexible floor or roof systems. The assumption is valid also for interior walls carrying independent slabs spanning from both sides, provided the span of the floor on one side does not exceed that on the other by more than 15 percent. Where the difference is greater, the displacement of the point of application of each floor load shall be taken as one-sixth of its bearing width on the wall and the resultant eccentricity calculated therefrom.

A-5 For timber and other lightweight floors, even for full width bearing on wall, an eccentricity of about one-sixth may be assumed due to deflection. For timber floors with larger spans, that is, more than 30 times the thickness of the wall, eccentricity of one-third the thickness of the wall may be assumed.

A-6 In multi-storeyed buildings, fixity and eccentricity have normally purely local effect and are not cumulative. They just form a constant ripple on the downward increasing axial stress. If the ripple is large, it is likely to be more serious at upper levels where it can cause cracking of walls than lower down where it may or may not cause local over-stressing.

NOTE — The resultant eccentricity of the total loads on a wall at any level may be calculated on the assumption that immediately above a horizontal lateral support, the resultant eccentricity of all the vertical loads above that level is zero.

A-7 For a wall corbel to support some load, the point of application of the load shall be assumed to be at the centre of the bearing on the corbel.

ANNEX B

(*Clause* 5.4.1)

CALCULATION OF BASIC COMPRESSIVE STRESS OF MASONRY BY PRISM TEST

B-1 DETERMINATION OF COMPRESSIVE STRENGTH OF MASONRY BY PRISM TEST

When compressive strength of masonry (f_m) is to be established by tests, it shall be done in advance of the construction, using prisms built of similar materials under the same conditions with the same bonding arrangement as for the structure. In building the prisms, moisture content of the units at the time of laying, the consistency of the mortar, the thickness of mortar joints and workmanship shall be the same as will be used in the structure. Assembled specimen shall be at least 400 mm high and shall have a height to thickness ratio (h/t) of at least 2 but not more than 5. If the h/t ratio of the prisms tested is less than 5 in case of brickwork and more than 2 in case of blockwork, compressive strength values indicated by the tests shall be corrected by multiplying with the factor indicated in Table 31.

Table 31 Correction Factors for Different *h/t* Ratios

(*Clause* B-1)

Ratio of Height to Thickness (*h/t*)	2.0	2.5	3.0	3.5	4.0	5.0
Correction Factors for Brickwork[1)]	0.73	0.80	0.86	0.91	0.95	1.00
Correction Factors for Blockwork[1)]	1.00	—	1.20	—	1.30	1.37

[1)] Interpolation is valid for intermediate values.

Prisms shall be tested after 28 days between sheets of nominal 4 mm plywood, slightly longer than the bed area of the prism, in a testing machine, the upper platform of which is spherically seated. The load shall be evenly distributed over the whole top and bottom surfaces of the specimen and shall be applied at the rate of 350 kN/m to 700 kN/m. The load at failure should be recorded.

B-2 CALCULATION OF BASIC COMPRESSIVE STRESS

Basic compressive stress of masonry shall be taken to be equal to $0.25 f_m$ where f_m is the value of compressive strength of masonry as obtained from prism test.

ANNEX C

(*Clauses* 5.3.3 *and* 5.4.1.5)

GUIDELINES FOR DESIGN OF MASONRY SUBJECTED TO CONCENTRATED LOADS

C-1 EXTENT OF DISPERSAL OF CONCENTRATED LOAD

For concentric loading, maximum spread of a concentrated load on a wall may be taken to be equal to $b + 4t$ (b is width of bearing and t is thickness of wall), or stretch of wall supporting the load, or centre-to-centre distance between loads, whichever is less.

C-2 INCREASE IN PERMISSIBLE STRESS

C-2.1 When a concentrated load bears on a central strip of wall, not wider than half the thickness of the wall and is concentric, bearing stress in masonry may exceed the permissible compressive stress by 50 percent, provided the area of supporting wall is not less than three times the bearing area.

C-2.2 If the load bears on full thickness of wall and is concentric, 25 percent increase in stress may be allowed.

C-2.3 For loading on central strip wider than half the thickness of the wall but less than full thickness, increase in stress may be worked out by interpolation between values of increase in stresses as given in **C-2.1** and **C-2.2**.

C-2.4 In case concentrated load is from a lintel over an opening, an increase of 50 percent in permissible stress may be taken, provided the supporting area is not less than 3 times the bearing area.

C-3 CRITERIA OF PROVIDING BED BLOCK

C-3.1 If a concentrated load bears on one end of a wall, there is a possibility of masonry in the upper region developing tension. In such a situation, the load should be supported on an RCC bed block (of M20 Grade) capable of taking tension.

C-3.2 When any section of masonry wall is subjected to concentrated as well as uniformly distributed load and resultant stress, computed by making due allowance for increase in stress on account of concentrated load, exceeds the permissible stress in masonry, a concrete bed block (of M20 Grade) should be provided under the load in order to relieve stress in masonry. In concrete, angle of dispersion of concentrated load is taken to be 45° to the vertical.

C-3.3 In case of cantilevers and long span beams supported on masonry walls, indeterminate but very high edge stresses occur at the supports and in such cases it is necessary to relieve stress on masonry by providing concrete bed block of M20 Grade concrete. Similarly when a wall is subjected to a concentrated load from a beam which is not sensibly rigid (for example, a timber beam or an RS joist), a concrete bed block should be provided below the beam in order to avoid high edge stress in the wall because of excessive deflection of the beam.

ANNEX D

(*Clause* 5.5.5)

GUIDELINES FOR APPROXIMATE DESIGN OF NON-LOAD BEARING WALL

D-1 PANEL WALLS

A panel wall may be designed approximately as under, depending upon its support conditions and certain assumptions:

a) When there are narrow tall windows on either side of panel, the panel spans in the vertical direction. Such a panel may be designed for a bending moment of $PH/8$, where P is the total horizontal load on the panel and H is the height between the centres of supports. Panel wall is assumed to be simply supported in the vertical direction.

b) When there are long horizontal windows between top support and the panel, the top edge of the panel is free. In this case, the panel should be considered to be supported on sides and at the bottom, and the bending moment should depend upon height to length ratio of panel and flexural strength of masonry. Approximate values of bending moments in the horizontal direction for this support condition, when ratio (μ) of flexural strength of wall in the vertical direction to that in horizontal direction is assumed to be 0.5, are given in Table 32.

Table 32 Bending Moments in Laterally Loaded Panel Walls, Free at Top Edge and Supported on Other Three Edges

[*Clause* D-1(b)]

Height of Panel, H / Length of Panel, L	0.30	0.50	0.75	1.00	1.25	1.50	1.75
Bending Moment	$\frac{PL}{25}$	$\frac{PL}{18}$	$\frac{PL}{14}$	$\frac{PL}{12}$	$\frac{PL}{11}$	$\frac{PL}{10.5}$	$\frac{PL}{10}$

NOTE — For H/L ratio less than 0.30, the panel should be designed as a free-standing wall and for H/L ratio exceeding 1.75, it should be designed as a horizontally spanning member for a bending moment value of $PL/8$.

c) When either there are no window openings or windows are of 'hole-in-wall' type, the panel is considered to be simply supported on all four edges. In this case also, amount of maximum bending moment depends on height to length ratio of panel and ratio (μ) of flexural strength of masonry in vertical direction to that in the horizontal direction. Approximate values for maximum bending moment in the horizontal direction for masonry with $\mu = 0.50$, are given in Table 33.

Table 33 Bending Moments in Laterally Loaded Panel Walls Supported on All Four Edges

[*Clause* D-1(c)]

Height of Panel, H / Length of Panel, L	0.30	0.50	0.75	1.00	1.25	1.50	1.75
Bending Moment	$\frac{PL}{72}$	$\frac{PL}{36}$	$\frac{PL}{24}$	$\frac{PL}{18}$	$\frac{PL}{15}$	$\frac{PL}{13}$	$\frac{PL}{12}$

NOTE — When H/L is less than 0.30, value of bending moment in the horizontal direction may be taken as nil and panel wall may be designed for a bending moment value of $PH/8$ in the vertical direction; when H/L exceeds 1.75, panel may be assumed to be spanning in the horizontal direction and designed for bending moment of $PL/8$.

D-2 CURTAIN WALLS

Curtain walls may be designed as panel walls taking into consideration the actual supporting conditions.

D-3 PARTITION WALLS

D-3.1 These are internal walls usually subjected to much smaller lateral forces. Behaviour of such wall is similar to that of panel wall and these could, therefore, be designed on similar lines. However, in view of smaller lateral loads, ordinarily these could be apportioned empirically as follows:

a) Walls with adequate lateral restraint at both ends but not at the top :

1) The panel may be of any height, provided the length does not exceed 40 times the thickness; or

2) The panel may be of any length, provided the height does not exceed 15 times the thickness (that is, it may be considered as a free-standing wall); or

3) Where the length of the panel is over 40 times and less than 60 times the thickness, the height plus twice the length may not exceed 135 times the thickness;

b) Walls with adequate lateral restraint at both ends at the top :

1) The panel may be of any height, provided the length does not exceed 40 times the thickness; or

2) The panel may be of any length, provided the height does not exceed 30 times the thickness; or

3) Where the length of the panel is over 40 times and less than 110 times the thickness,

the length plus three times the height should not exceed 200 times the thickness; and

c) When walls have adequate lateral resistant at the top but not at the ends, the panel may be of any length, provided the height does not exceed 30 times the thickness.

D-3.2 Strength of bricks used in partition walls should not be less than 3.5 N/mm^2 or the strength of masonry units used in adjoining masonry, whichever is less. Grade of mortar should not be leaner than M2.

D-4 CANTILEVER PROJECTIONS

The provisions given under **5** of Part 6 'Structural Design, Section 1 Loads, Forces and Effects' of the Code shall be applicable. As a general guide, the details of connection between parapets and slabs for existing structures shall be as given in Fig. 57.

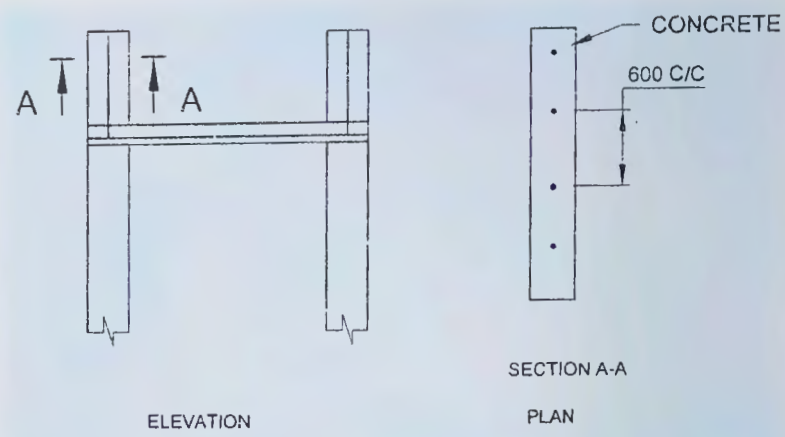

NOTES

1 Hole shall be made in bricks in advance to accommodate the reinforcement bars of slab.

2 Bottom bar of slab continued in the parapet at spacing of 600 mm c/c.

FIG. 57 PARAPET WALLS

ANNEX E

(*Clause* 8.9)

CONFINED MASONRY BUILDING CONSTRUCTION

E-1 UNDERSTANDING CONFINED MASONRY CONSTRUCTION

E-1.1 Confined masonry construction is a building technology that offers an alternative to 'minimally reinforced masonry' with 'RC bands and vertical Bars' and the 'RC frame construction'. It consists of masonry walls (made either of clay brick or concrete block units) and horizontal and vertical RC 'confining members' built on all four sides of the masonry wall panels. Vertical members are called 'tie columns' or 'practical columns' 'practical columns' and though they resemble columns in RC frame construction but are of much smaller cross-section. Horizontal elements, called 'tie beams', resemble beams in RC frame construction, but of much smaller section. It shall be understood that the confining elements are not beams and columns the way these are used in RC frames but rather in the nature of horizontal and vertical ties or bands for resisting tensile stresses and may better be termed as such.

The structural components of a building using confined masonry walls are as follows (*see* Fig. 58):

a) *Masonry walls,* are load bearing elements, and transmit the gravity loading from the slab(s) and walls above down to the foundation. The walls also work as bracing panels acting along with the confining tie elements which resist the horizontal earthquake forces.

b) *Confining elements,* horizontal and vertical tie elements provide the necessary tensile strength and ductility to the masonry wall panels and protect them from disintegration in the specified major earthquakes.

c) *Floor and roof slabs,* transmit both vertical gravity and lateral loads to the confined masonry walls. In an earthquake the slabs behave like rigid horizontal diaphragms.

d) *Plinth band or tie beam*, shall transmit the vertical and horizontal loads from the walls down to the foundation. It also protects the ground floor walls from settlement in soft soil conditions.

e) *Foundation,* transmits the loads from the structure to the ground.

The masonry wall construction shall follow all detailed specifications given in this Section except those to be modified as per this annex.

Confined masonry walls can be constructed using different types of masonry units, such as hollow clay tiles, burnt clay bricks, concrete blocks of hollow or solid types or dressed rectangularized stones. In confined masonry, the reinforcement is concentrated in vertical and horizontal confining elements whereas

the masonry walls are usually free of reinforcement, but may be connected with the confining elements using steel dowels.

E-1.2 Difference Between Confined Masonry and RC Frame Construction

The appearance of finished confined masonry construction and a RC frame construction with masonry infills may look alike but in load carrying scheme they are very different. The main differences are related to the construction sequence, as well as to the manner in which these structures resist gravity and lateral loads (*see* Fig. 59). Whereas in RC Frames, the RC columns and beams carry the vertical gravity as well as the lateral loads from earthquakes or wind storms unaided by the masonry infills, in the case of confined masonry buildings, the wall panels are the main load carrying elements (both vertical and horizontal) aided by the confining elements for resisting tensile forces.

E-2 GUIDE TO EARTHQUAKE-RESISTANT CONFINED MASONRY CONSTRUCTION

The satisfactory earthquake performance of confined masonry is due to the joint action of masonry walls and the reinforced concrete confining elements. Properly designed and built confined masonry buildings are expected to exhibit good performance even in maximum considered earthquake (MCE) wherein, moderate cracking in the elements is not ruled out, but collapse of building will be highly improbable. Depending on the crushing strength of the building unit, confined masonry buildings may be constructed up to five storeys in height for various building categories as suggested below:

a) Categories B and C : Up to 5 storeys
b) Categories D and E : Up to 4 storeys

E-2.1 Building Configuration

The architectural configuration concepts as highlighted in **8.2.4** are necessary in confined masonry construction also.

E-2.2 Confining Elements

The tie-beams should be placed at plinth and every floor level. Vertical spacing of tie-beams should not exceed 3 m. The tie columns should be placed at a maximum spacing of 4 m in 200 mm or thicker walls and 3 m in 100-114 mm thick walls, as well as at the following locations:

a) At the corners of rooms and all wall-to-wall intersections,
b) At the free end of a wall, and
c) At the jambs of doors/windows of 900 mm or wider openings.

E-2.3 Walls

The wall thickness may be kept 100 or 114 mm in the case of one to two storey high residential buildings. But for all important {*see* **6.4.2** of good practice [6-4(9)]} buildings and those of more than two storeys height, the thickness should be 200 or 230 mm, and the mortar shall be as per **8.1.2**. At least two fully confined panels should be provided in each direction of the building. The earthquake performance of a confined masonry building depends on the shear resistance of masonry walls. Therefore, it is essential to provide an adequate number of walls in each direction. The walls should be placed preferably at the periphery so as to minimise torsion of the building in an earthquake.

E-2.4 Wall Density

Wall density can be defined as the total cross-sectional areas of all confined wall panels in one direction divided by the sum of the floor plan areas of all floors in a building. Wall density of at least 2 percent in each of two orthogonal directions is required to ensure good earthquake performance of confined masonry building in Seismic Zone III of India. For the aim of achieving adequate earthquake performance in the higher seismic zones, the wall density of 3 percent in Seismic Zone IV and 4.5 percent in Seismic Zone V should at least be used.

E-3 CONSTRUCTION DETAILS OF CONFINED MASONRY

E-3.1 Construction of Walls

The aim should be to use good quality building materials, that is, the build units and the mortar; as well as good quality workmanship as follows:

a) Minimum wall thickness is 100 or 114 mm. Wall panel height to thickness ratio should not exceed 30.
b) Toothed edges should be left on each side of the wall; the tooth projection may be kept ≤ 40 mm to achieve full concrete filling in the teeth space. Use of horizontal dowels instead or in addition to teething could be made at the wall-to-column interface.
c) Concrete is to be poured in the tie columns upon completion of desirable wall height (*see* Fig. 59B). Bricks shall be wetted before casting of concrete.
d) Formwork support shall be provided on two sides of the wall (*see* Fig. 60). The concrete needs to be vibrated to fill the teeth space thoroughly.

E-3.2 Tie-Columns

a) The minimum tie column cross-sectional

dimensions are 100 mm × 100 mm or 114 mm × 114 mm in 100 or 114 mm thick walls, respectively and 150 × 200 or 150 × 230 in 200 or 230 mm thick walls at intermediate points but of square section of 200 or 230 mm side at the corners.

b) Reinforcement for the ground storey tie columns should be assembled before the foundation construction takes place (*see* Fig. 61).

c) The reinforcement in tie columns at the corners should consist of four high strength deformed bars (HSD/TOR) for longitudinal reinforcement, and 6 mm ties at 100 mm spacing in the end 500 mm height at top and bottom of column and 200 mm apart in the remaining height. Vertical bars should be lapped by a minimum of 50 times the longitudinal bar diameter. The longitudinal bar may be positioned as follows:

1) Categories B and C	:	8 mm diameter up to four storeys and 10 mm diameter in 5 storeyed building
2) Categories D and E	:	10 mm diameter up to 3 storeys and 12 mm diameter in 4 storeyed building

d) The tie columns at jambs of windows / doors may be 100 mm thickness of wall in size and have only two longitudinal bars each of same dia as in corner columns with 6 mm link ties spaced as in the corner columns.

E-3.3 Tie-Beams

a) The minimum tie beam cross-sectional dimensions are 100 mm × 100 mm in 100 mm thick walls; 150 mm × 200 mm in 200 mm thick walls and 150 mm × 230 mm in 230 mm thick walls.

b) Tie beams are constructed on top of the walls at each floor level.

c) The tie beam reinforcement should consist of four high strength deformed bars (HSD/TOR) for longitudinal reinforcement, and 6 mm stirrups at 200 mm spacing. The tie beam reinforcement needs to be continuous, with longitudinal reinforcement bars lapped by at least 50 times the bar diameter. The following bar diameter may be adopted:

1) Building Categories B : 8 mm diameter and C
2) Building Categories D : 10 mm diameter and E

d) The lintel level bands may be provided as per **8.6.4.5**. Very wide windows may require stronger lintels.

e) Proper detailing of the tie beam and its connection to tie column is necessary for satisfactory earthquake performance (*see* Fig. 62).

E-3.4 Foundation and Plinth Construction

A plinth band should be constructed on top of the foundation (same as in **8.6.4.6**). Instead of the specified band in this Section, a tie beam as specified in **E-3.3** above shall be preferable for proper confinement of masonry panel above it.

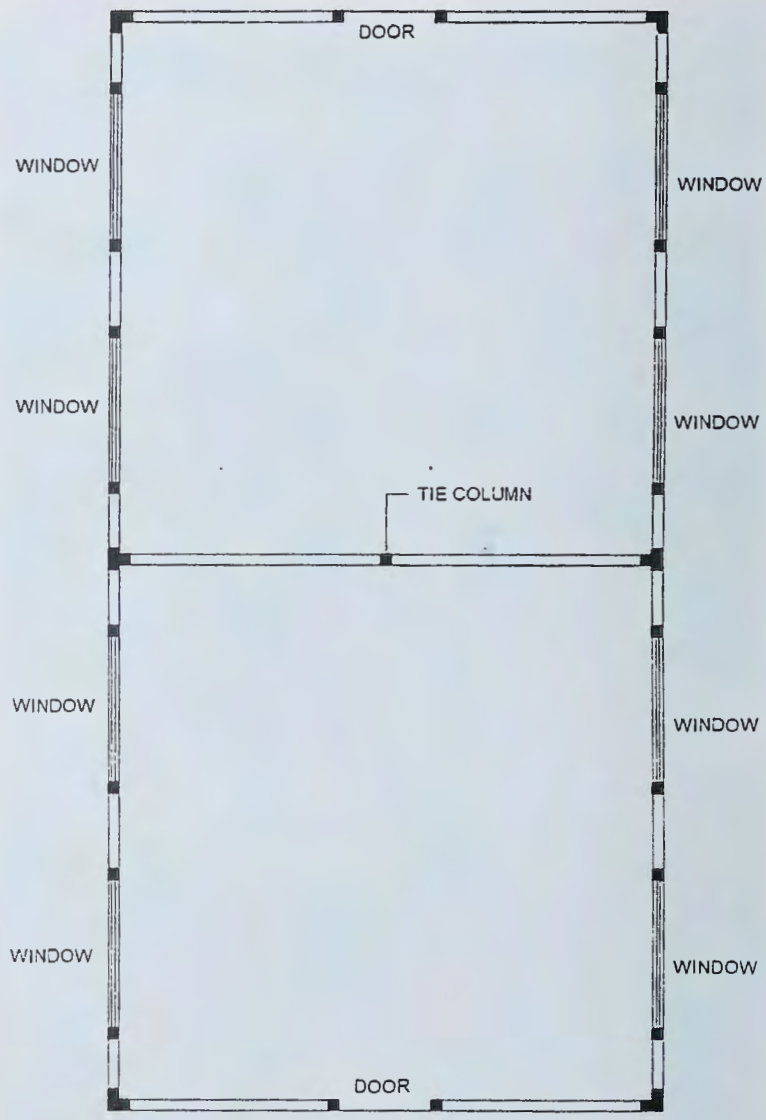

TWO ROOM, TWO STOREYS
150 CC BLOCK WALLS

58A Typical Confined Masonry Building Plan

Fig. 58 Confined Masonry Building (*Continued*)

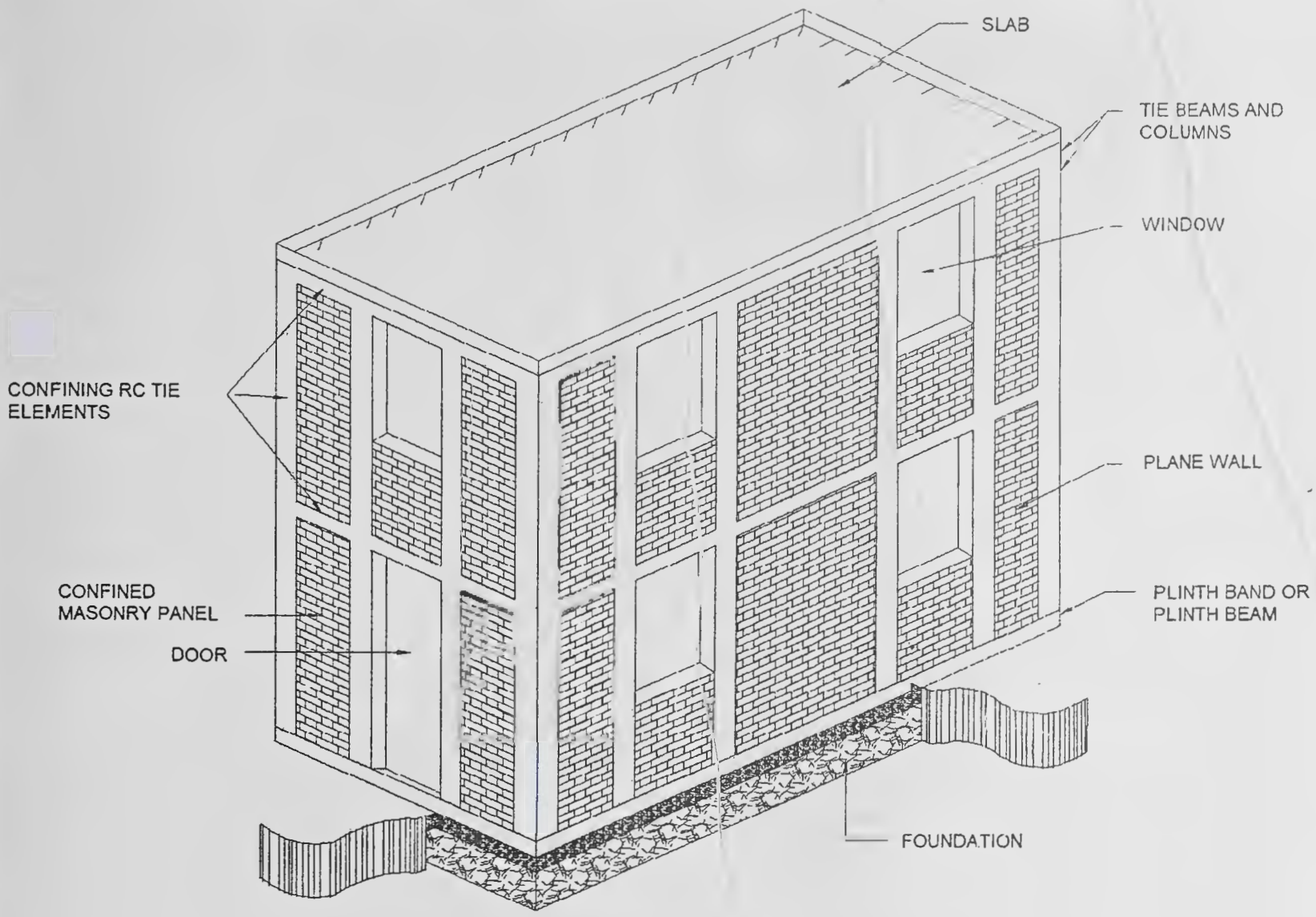

58B TYPICAL 2-STOREY CONFINED MASONRY BUILDING

FIG. 58 CONFINED MASONRY BUILDING

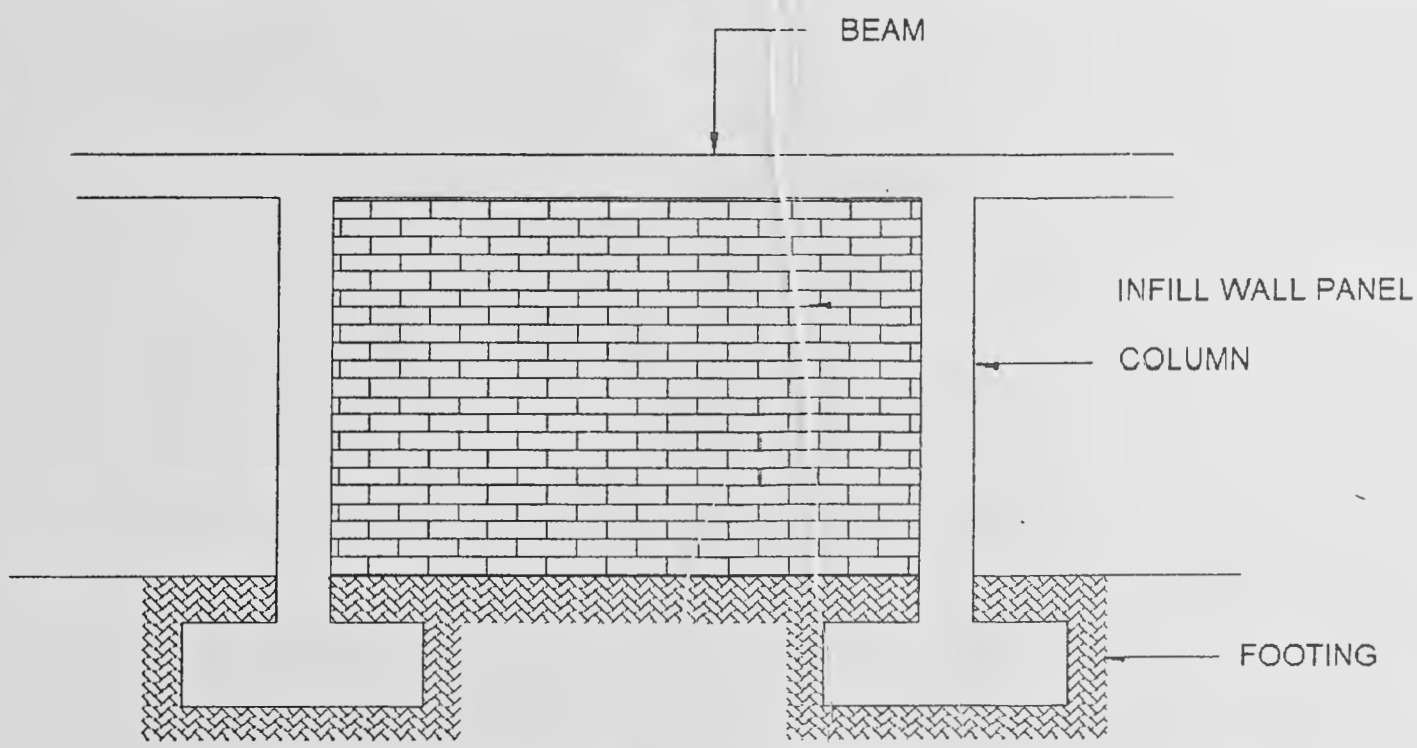

59A RC FRAME CONSTRUCTION

FIG. 59 RC FRAME AND CONFINED MASONRY CONSTRUCTION (*Continued*)

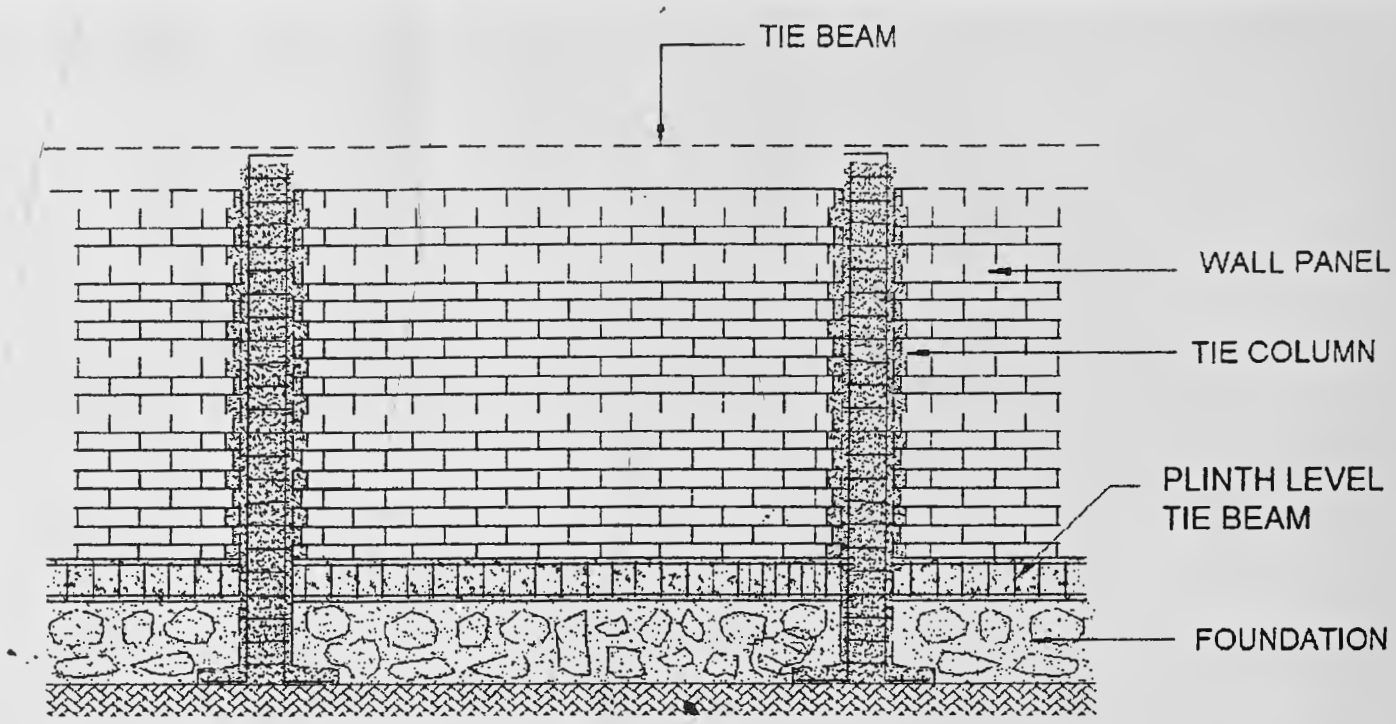

59B CONFINED MASONRY CONSTRUCTION

FIG. 59 RC FRAME AND CONFINED MASONRY CONSTRUCTION

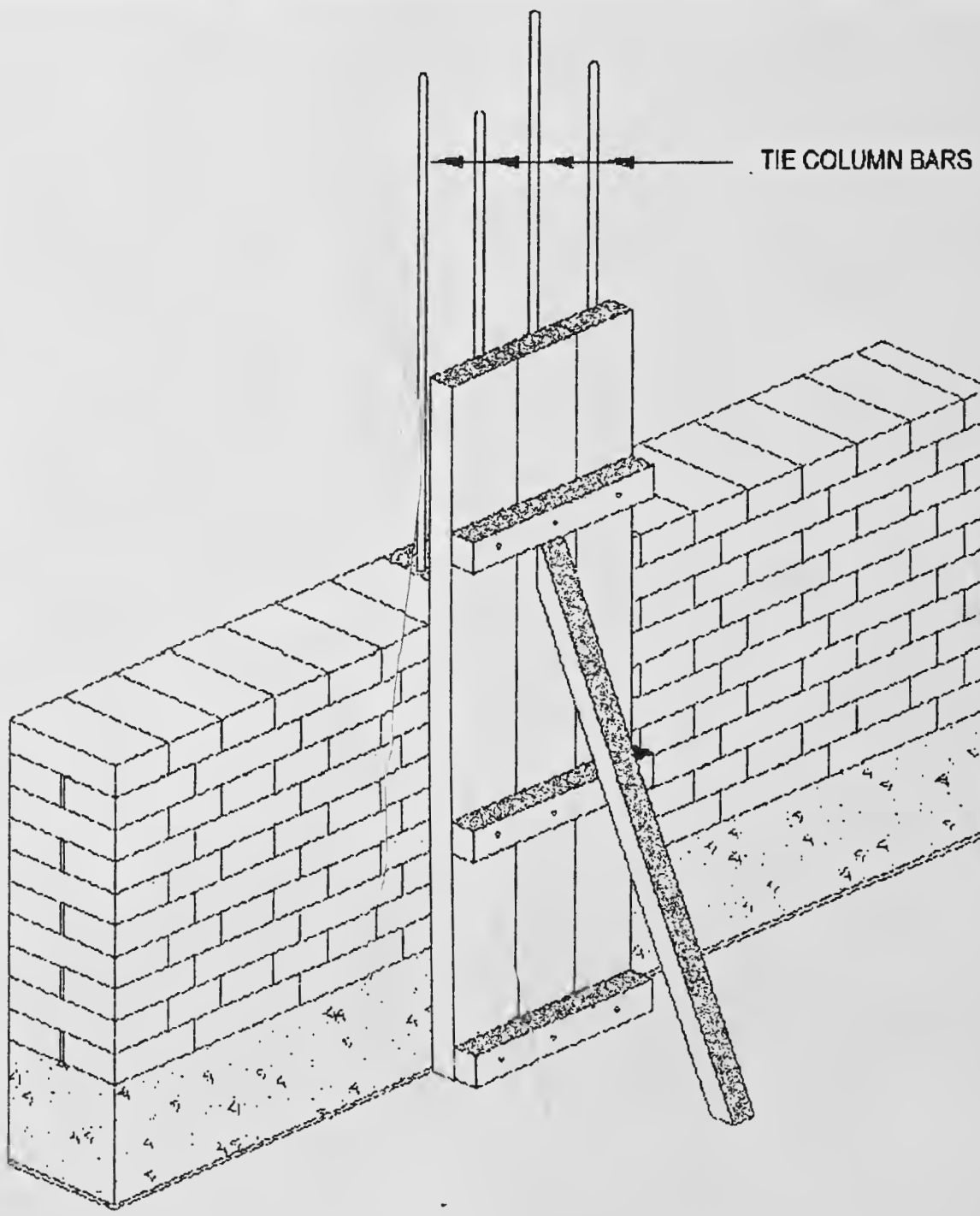

FIG. 60 FORMWORK FOR TIE COLUMNS

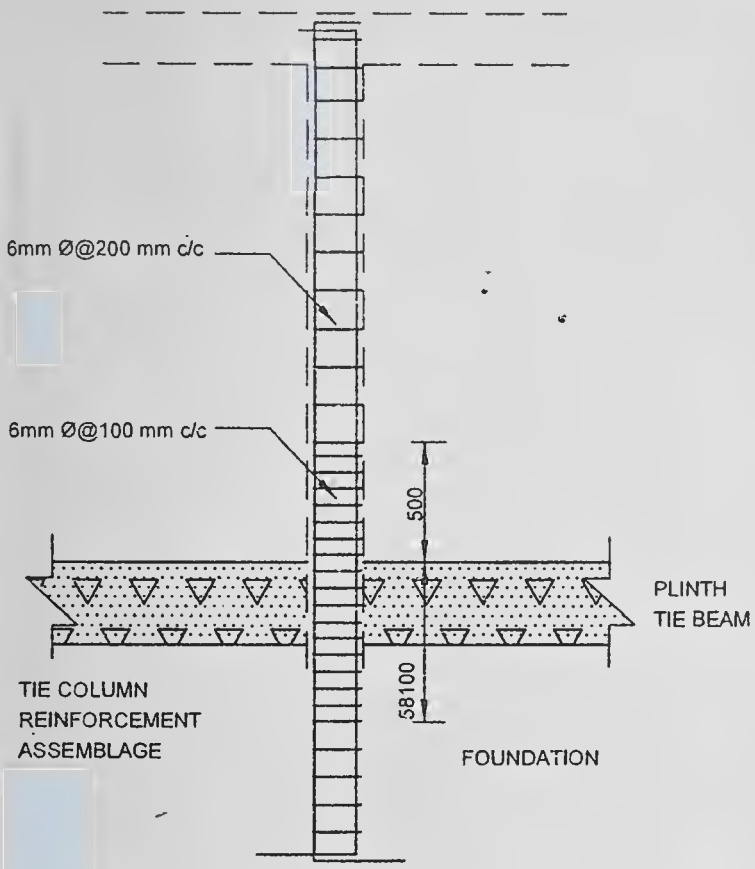

61A TIE COLUMN REINFORCEMENT SET IN POSITION PRIOR TO THE CONSTRUCTION OF FOUNDATION AND WALLS

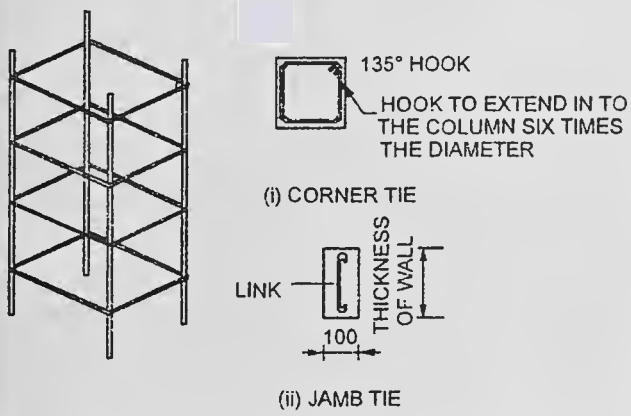

61B TIE REINFORCEMENT DETAILS OF TIE COLUMN

FIG. 61 TIE COLUMN REINFORCEMENT

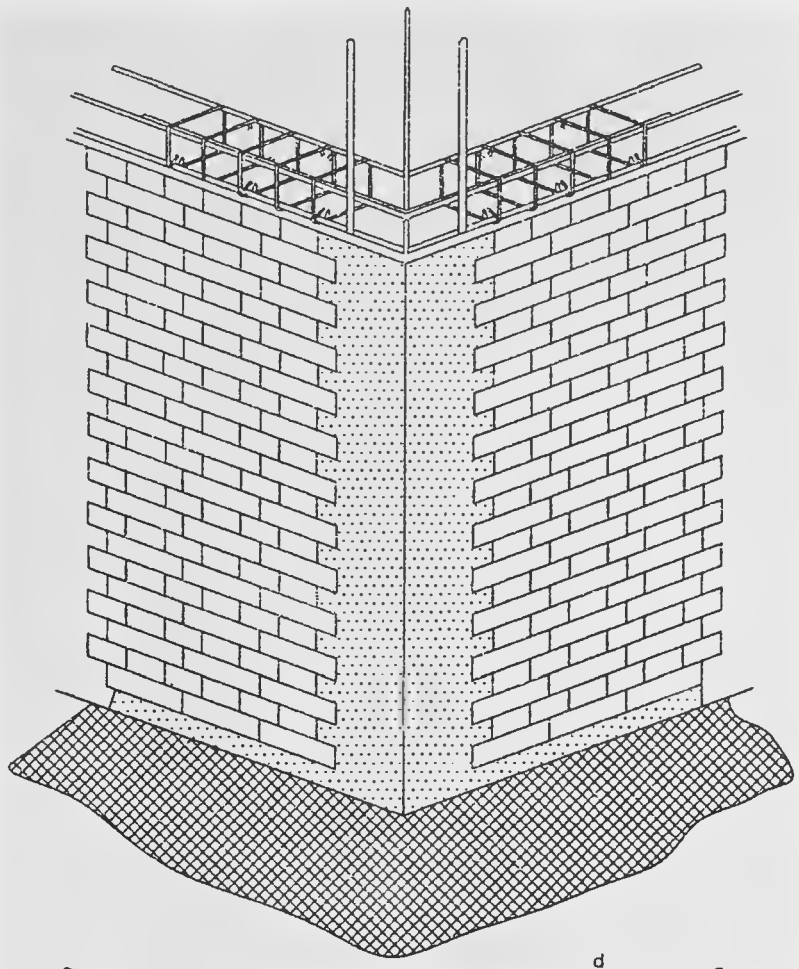

62A Sectional Elevation

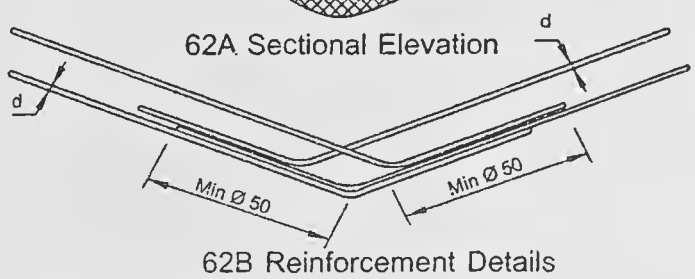

62B Reinforcement Details

FIG. 62 TIE BEAM AND COLUMN

ANNEX F

(*Clause* 10.6.1.2)

TYPICAL ITERATIVE METHOD FOR WALLS SUBJECTED TO FLEXURE AND AXIAL LOAD

F-1 There is no closed form solution available for the computation of stress in walls due to combined action of bending and axial compression. Engineers normally prefer to use design charts for computation of stresses in such conditions, but design charts for most masonry systems are not readily available. Therefore, iterative methods are used as most common tools for masonry structures. Two types of iterative procedures are given below, which can be used to analyse the adequacy of the section under specified load and determine the amount of reinforcement required, wherever necessary.

F-2 ITERATIVE PROCEDURE 1

Figure 63 shows a diagram of a wall subjected to an axial load and bending moment. The same diagram is applicable to both in-plane and out-of-plane bending of walls. There are three possible conditions for the wall:

a) Wall is uncracked,

b) Wall is cracked with the steel in compression (the extent of the crack has not reached the steel), or

c) Wall is cracked with the steel in tension.

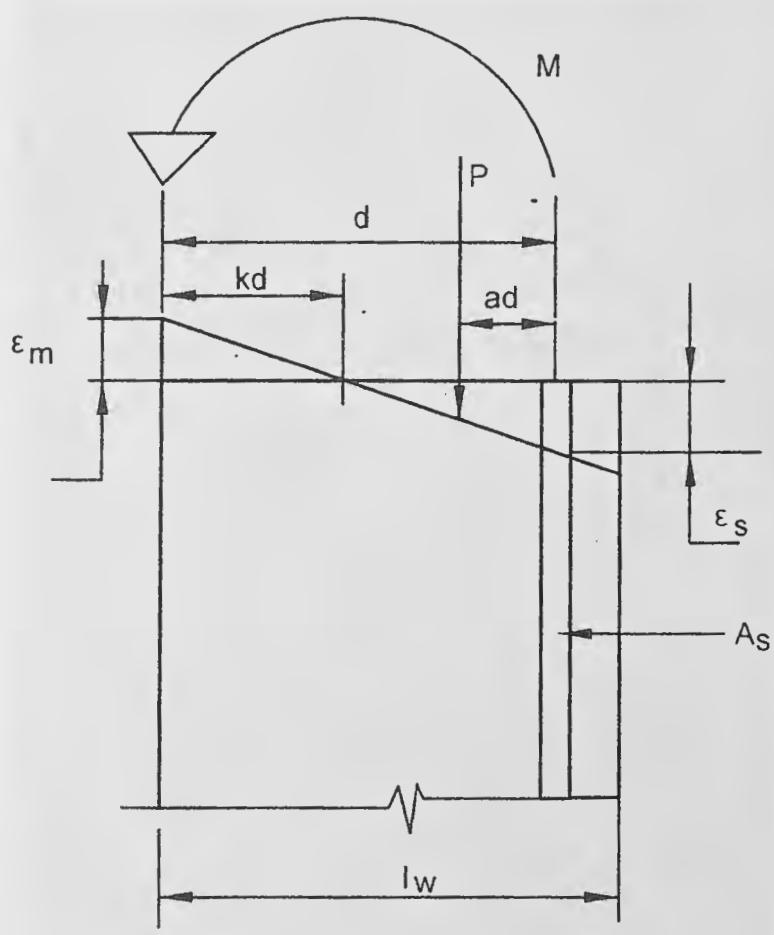

FIG. 63 FLEXURE AND AXIAL WALL LOADING

Figure 63 shows the interaction between bending moment and axial load. Loading conditions beyond the limits of the diagram are beyond the allowable stresses. The condition of the wall can be quickly diagnosed by using the non-dimensional parameter *M/Pd*. This parameter represents a straight line radiating from the diagram's origin as shown in Fig. 64. By summing moments, it can be shown that certain values of *M/Pd* divide the diagram into three regions. These values are given in Table 34. The allowable moments for Regions 1 and 2 can be obtained in closed form with simple equations. But in Region 3, it is a bit complicated. The process consists of initial assumption of thickness, length and other necessary parameters and determination of the amount of steel required.

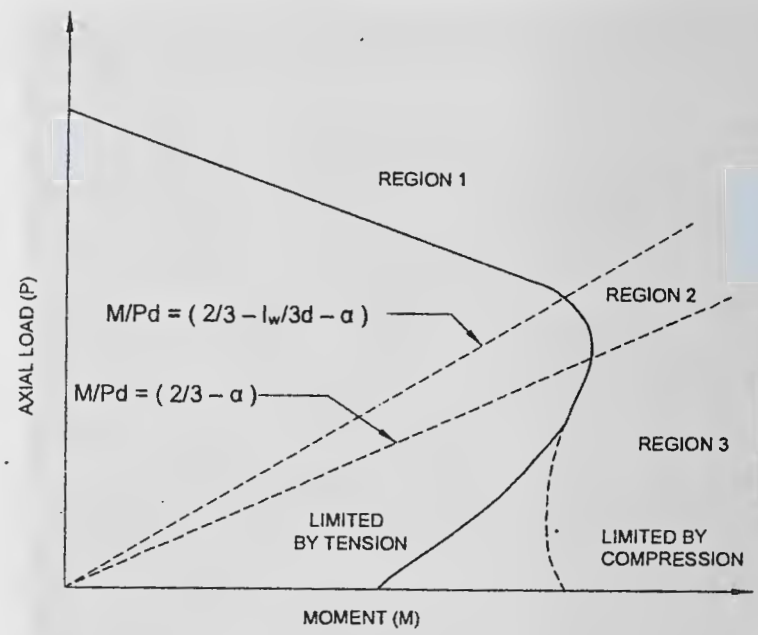

FIG. 64 INTERACTION DIAGRAM

For Region 3, the process starts with another assumption that the tension in steel controls. By making an initial guess about the location of the neutral axis, the expressions for M_p and a_2 provide an iterative process that quickly converges. The equations are derived from the summation of forces and moments and by using linear stress-strain relationships. The equations should always converge for all values of P, l_w, M, and n. If convergence is not obtained, it is likely that the assumed initial value of a has exceeded d. The initial value of a is to be reduced and same procedure is to be repeated. The iteration will often result in a negative steel area. This signifies that the element does not need reinforcement to resist the loads within the allowable stresses, even though the section is cracked (Region 3).

Following convergence, a check is made of the initial assumption that tension in steel controls. If not valid, then the compression controls and a new set of equations that do not require iteration are used.

F-3 The following is a detailed step-by-step procedure of the analysis methodology described above:

a) Step 1:

Determine the wall condition:

1) Calculate a as the distance from the axial load to the centroid of the tension steel divided by *d*.
2) Calculate the quantity *M/Pd*.
3) Use Table 34 to determine the region for analysis (*see* Fig. 63).

Table 34 Flexure and Axial Loading - Wall Analysis

(*Clause* F-3)

Sl No. (1)	Region (2)	Condition of Wall (3)	Test (4)
i)	1	Wall is in compression and not cracked	$\frac{M}{Pd} \le \left[1 - \frac{l_w}{3d} - \alpha\right]$
ii)	2	Wall is cracked but steel is in compression	$\frac{M}{Pd} \le \left[\frac{2}{3} - \alpha\right]$
iii)	3	Wall is cracked and steel is in tension	$\frac{M}{Pd} > \left[\frac{2}{3} - \alpha\right]$

b) Step 2:

Calculate the allowable moment.

1) Region 1:

   The moment is limited by flexural compression in the masonry.

$$M_m = \frac{bl_w^2}{6} F_b - P\frac{l_w}{6}$$

   If M_m is greater than M applied, the section is satisfactory.

2) Region 2:

   The moment is also limited by flexural compression in the masonry.

$$M_m = P(1-\alpha)d - \frac{2}{3}\left[\frac{P^2}{F_b b}\right]$$

   If M_m is greater than M applied, the section is satisfactory.

3) Region 3:

   The moment may be limited by either the compression in the masonry or tension in the steel. An iterative approach as below shall be adopted.

   i) Assume a compression centroid location, *a*.

   ii) Perform the following iteration that assumes the tension in the steel controls (remember that A_s may be negative):

$$M_p = P\left(\frac{l_w}{2} - \alpha\right)$$

$$A_s = \frac{M - M_p}{F_s(d-a)}$$

$$\zeta = \frac{(P + A_s F_s)n}{F_s b}$$

$$a_2 = \frac{\sqrt{\zeta^2 + 2\zeta d} - \zeta}{3}$$

where

a = estimate of internal compression load centroid distance from the extreme compression fibre.

P = applied axial load at the centre of the wall.

M = applied moment.

A_s = area of trim or edge steel.

M_p = moment of applied axial load with respect to the centroid of internal compression force.

l_w = width of the wall for in-plane bending (thickness of wall for out of plane bending).

d = distance from the extreme compression fibre to the steel centroid.

F_s = allowable steel tension stress.

b = width of the wall for out-of-plane bending (thickness of wall for in-plane bending).

Use a_2 for a, and repeat until the value of a converges.

c) Step 3:

If the iteration converges and the resulting a is less than the following value, the wall is limited by the tension reinforcement and the analysis is complete. Otherwise continue to step 4.

$$a = \frac{d}{3\left(1 + \frac{F_s/F_b}{n}\right)}$$

d) Step 4:

If the value of a is larger than the above value, determine the required steel area using the following:

$$a = \frac{d}{2} - \sqrt{\left(\frac{d^2}{4} - \frac{2(P\alpha d + M)}{3F_b b}\right)}$$

If $\sqrt{\left(\frac{d^2}{4} - \frac{2(P\alpha d + M)}{3F_b b}\right)}$ is negative, there is inadequate compression capacity.

Increase b or F_b or both. The steel area is:

$$A_s = \frac{\left(\frac{3F_b ab}{2} - P\right)}{\left[nF_b\left(\frac{d}{3a} - 1\right)\right]}$$

In all cases the wall trim steel should not be less than minimum values.

F-4 ITERATIVE PROCEDURE 2

The following is another procedure to determine the state of stress in wall elements subjected to combined action of bending and axial compression. Free body diagram of a wall with axial load, bending moment, and tensile and compressive forces is given in Fig. 65. The location of C is based on the neutral axis location kd. The location of T is at the centroid of the reinforcement.

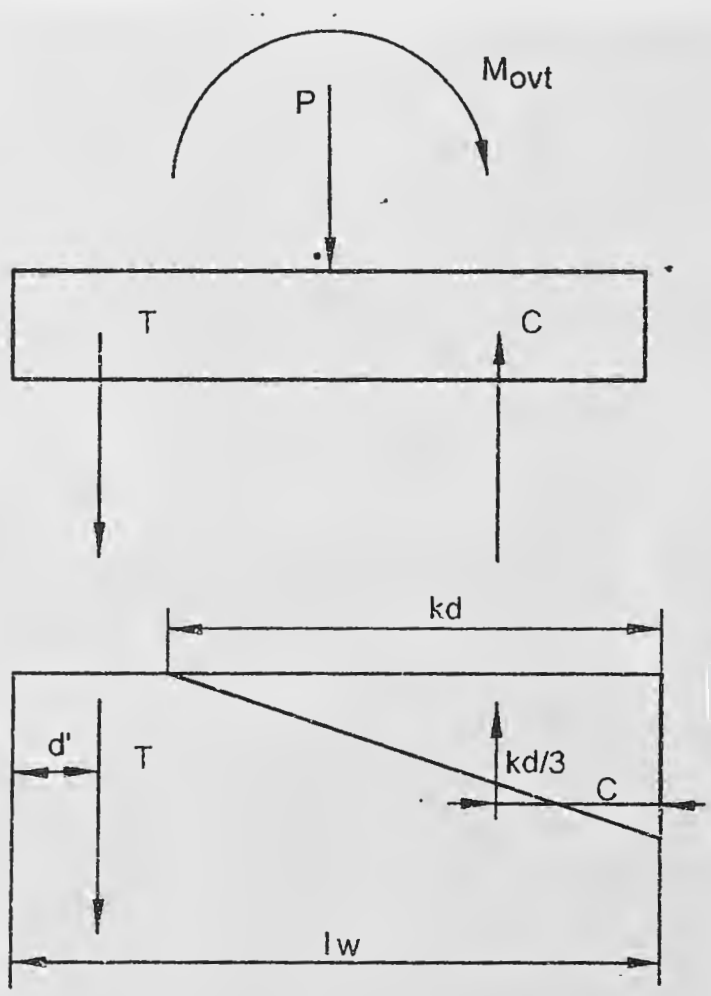

FIG. 65 FLEXURE BODY DIAGRAM OF A WALL

The problem can be solved by taking moments about the centerline of the wall, the tensile reinforcement (assuming that masonry compressive stresses control), or the compressive force (assuming that the stresses in the reinforcement control). By inserting the allowable value of stresses, which is assumed to control, a quadratic equation in terms of kd may be developed and solved.

For example, if P is at the centerline of the wall, taking moments about the centroid of the tensile reinforcement results in the equation:

$$C\left[(l_w - d') - \left(\frac{kd}{3}\right)\right] = P\left(\frac{l_w}{2} - d'\right) + M$$

but $C = ½\, F_m bkd$ and $l_w - d' = d$. Then

$$½\, F_m bkd\left(d - \frac{kd}{3}\right) = P\left(\frac{l_w}{2} - d'\right) + M$$

Dividing both side by $½\, F_m b$

$$kd^2 - \frac{(kd)^2}{3} = \frac{P\left(\frac{l_w}{2} - d'\right) + M}{½ F_m b}$$

Multiplying by –3 and rearranging terms :

$$(kd)^2 - 3d(kd) + \frac{3\left[P\left(\frac{l_w}{2} - d'\right) + M\right]}{½ F_m b} = 0$$

$$kd = \frac{3d - \sqrt{(-3d)^2 - 4\left(\frac{3\left[P\left(\frac{l_w}{2} - d'\right) + M\right]}{½ F_m b}\right)}}{2}$$

Inserting the values for P, M, l_w, b, d and F_m yields kd. Note that this method is iterative since a location of d' shall be assumed.

Having solved for kd one can calculate C.

By $\Sigma F_v = 0$, $T = C - P$

From strain compatibility,

$f_s = \left(\frac{1-k}{k}\right) nF_m$, Thus f_s can be calculated.

If $f_s < F_s$, the masonry compressive stress controls and the solution is finished by calculating $A_s = T/f_s$. If however, $f_s > F_s$ the assumption that masonry stresses control is incorrect, and the neutral axis location is wrong.

A good starting assumption to calculate f_m is to take T assuming that masonry compressive stresses control, and to divide by F_s to get a trial A_s. This allows the designer to choose a bar layout and verify the initial assumption of d', the distance to the centroid of reinforcement.

$A_s = T/F_s$

Since $C = T + P$ the effects of the axial load can be included by using an effective amount of reinforcement.

$$(A_s)_{eff} = A_s + \frac{P}{F_s} \quad \left(or\ \frac{T+P}{F_s}\right)$$

$$\rho_{eff} = \frac{(A_s)_{eff}}{bd}$$

$$k = \left[(n\rho)^2 + 2n\rho\right]^{\frac{1}{2}} - n\rho$$

$$j = 1 - \frac{k}{3}$$

The steel stress may be checked using

$$f_s = \frac{M'}{(A_s)_{eff}\, jd}$$

where

$$M' = P\left(\frac{l_w}{2} - d'\right) + M$$

$$T_{eff} = (A_s)_{eff} \times f_s$$

$$T = T_{eff} - P$$

The masonry stress may be checked by using:

$$f_m = \frac{2M'}{bjkd^2}$$

If $f_s > F_s$, a second iteration may be required may be required with a larger bar size or an extra bar. In a shear wall if an extra bar is added, the value of d', and the moments calculated using,

$$P\left(\frac{l_w}{2} - d'\right) + M$$

will need to be re-evaluated. Then one can reiterate from,

$$(A_s)_{eff} = A_s + \frac{P}{F_s}$$

to reduce f_s so that it is less than F_s.

ANNEX G

(*Clause* 10.7.1)

DISTRIBUTION OF LATERAL FORCES IN THE PIERS OF A MASONRY WALL

G-1 Masonry walls are often seen to be perforated to make arrangement for windows and doors. The distribution of lateral force in a masonry wall is dependent on the position of the openings and the relative rigidity of the masonry piers created due to the presence of the openings in the masonry wall. The relative rigidity is dependent on the height by length ratio (h/L) of the piers and the end conditions of those masonry piers as the deflection of the masonry piers due to horizontal loading changes due to the end condition of the piers (*see* Fig. 66). Here is a simple process is described which can be used to distribute

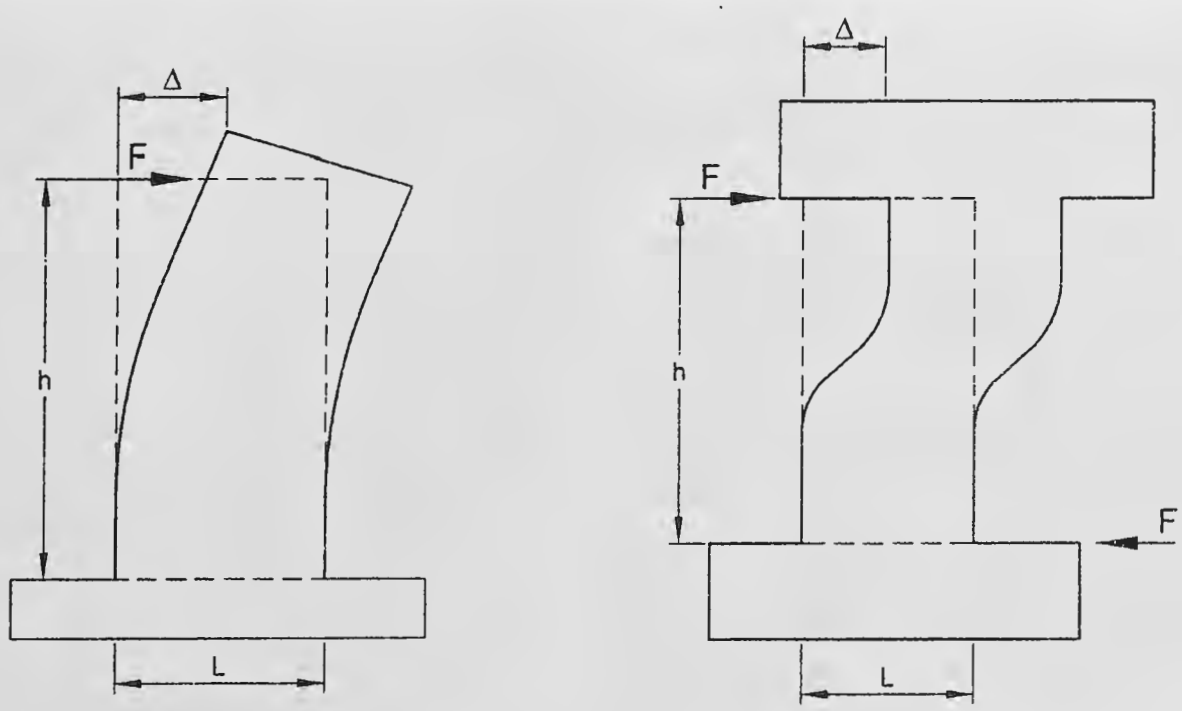

66A CANTILEVERED WALL OR PIER (TOP FREE TO ROTATE)

66B PIER BETWEEN OPENINGS (TOP RESTRAINED FROM ROTATION)

FIG. 66 DEFLECTION DUE TO END CONDITIONS OF PIERS

the lateral force in a wall which can be considered to be consist of some piers with some specific arrangements.

G-2 In any kind of placing of opening, the wall can be represented as a horizontal and vertical combination of piers with their respective end condition which will be used to find out their rigidities. Where large openings occur, it is difficult to obtain effective coupling of the wall segments or piers. If the wall is analysed as a horizontal combination of piers as shown in Fig. 67A and the combined rigidity

$$R = R_{c1} + R_{c2} + R_{c3}$$

where R_{c1}, R_{c2}, R_{c3} are the rigidities of the piers 1, 2, 3, respectively.

If the segments are combined vertically, as shown in Fig. 67B, the combined rigidity can be calculated as:

$$R = \frac{1}{\Delta C_1 + \Delta C_2 + \Delta C_3} = \frac{1}{\frac{1}{R_{c1}} + \frac{1}{R_{c2}} + \frac{1}{R_{c3}}}$$

Where R_{c1}, R_{c2}, R_{c3} are the rigidities of the piers 1, 2 and 3, respectively. Combination of these two types can be used to find the effective relative stiffness of a masonry wall.

The expression ignores the rotations that occur at the tops of segment 2 and 3 and therefore overestimates the rigidity of the wall. Along with this, it is valid only for the application of loads at the top level of the building.

As already said the rigidity R of the pier is dependent on its dimensions, modulus of elasticity E, modulus of rigidity G, and the support conditions. For a cantilever pier the displacement due to combined action of bending and shear is:

$$\Delta_c = \frac{Fh^3}{3EI} + \frac{1.2Fh}{GA}$$

where

F = horizontal force applied to the pier,

h = height of the pier,

I = moment of inertia of pier = $tL^3/12$,

G = modulus of rigidity = $0.4E_m$,

A = area of the pier = Lt,

L = length of the pier, and

t = thickness of pier.

So displacement of the cantilever pier is:

$$\Delta C = \frac{1}{Et}\left[4\left(\frac{h}{L}\right)^3 + 3\left(\frac{h}{L}\right)\right]$$

The rigidity of a wall is proportional to the inverse of the deflection. For cantilever walls the rigidity will be:

$$R_c = \frac{1}{\Delta C} = \frac{Et}{\left[4\left(\frac{h}{L}\right)^3 + 3\left(\frac{h}{L}\right)\right]}$$

$$\Rightarrow \frac{R_c}{Et} = \frac{1}{\left[4\left(\frac{h}{L}\right)^3 + 3\left(\frac{h}{L}\right)\right]}$$

For a pier with both ends fixed against rotation the deflection due to combined action of bending and shear will be:

$$\Delta_f = \frac{Fh^3}{12EI} + \frac{1.2Fh}{GA} = \frac{F}{Et}\left[\left(\frac{h}{L}\right)^3 + 3\left(\frac{h}{L}\right)\right]$$

$$\Rightarrow \frac{R_f}{Et} = \frac{1}{\left[\left(\frac{h}{L}\right)^3 + 3\left(\frac{h}{L}\right)\right]}$$

Values of R/Et for different h/L ratio can be taken from the chart in the Fig. 68.

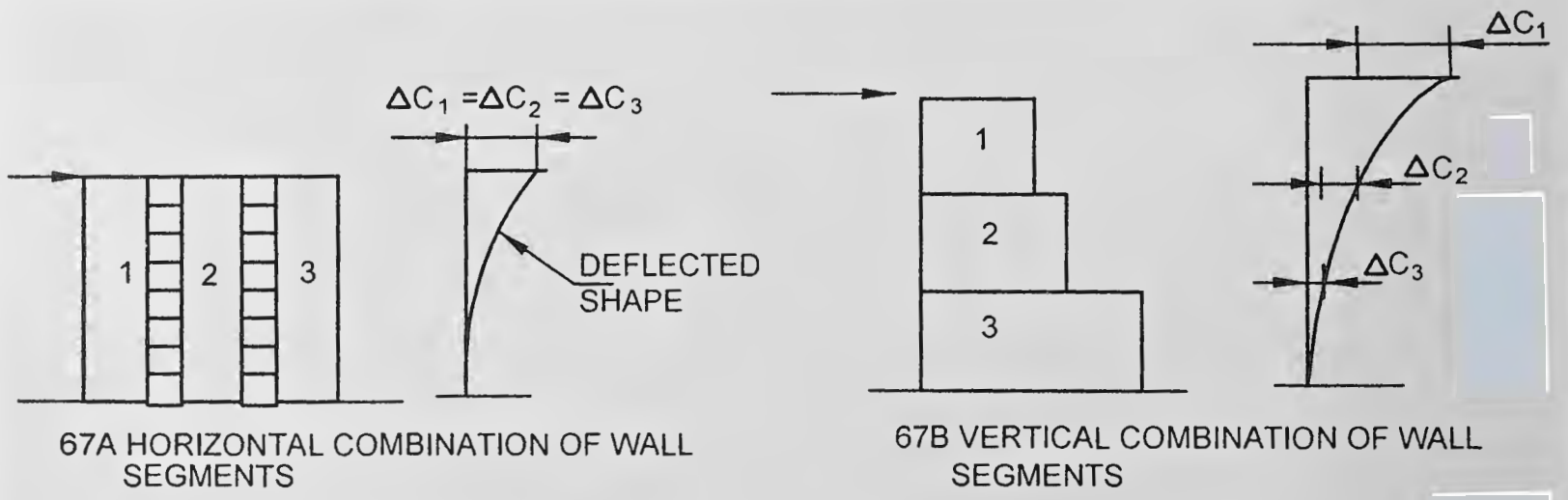

FIG. 67 WALL COMBINBATIONS FOR CALCULATING RIGIDITIES OF WALLS WITH OPENINGS

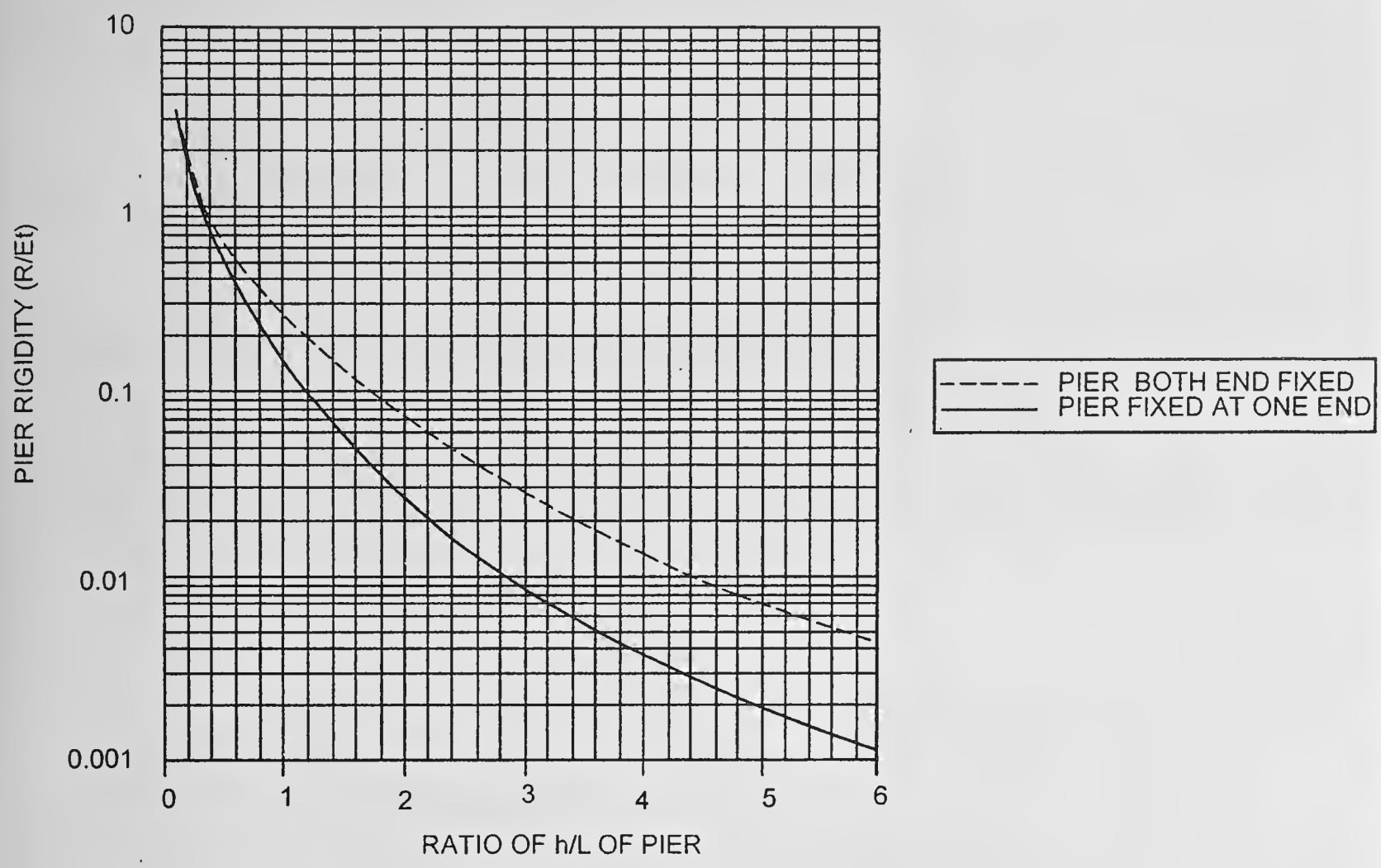

FIG. 68 CHARTS FOR CALCULATING WALL RIGIDITIES

From the relations given in equations above it is found that the relative contributions of the bending and shear deformation depend on the wall aspect ratio (h/L) and therefore, the rigidity varies over the height of the building. For high h/L ratios, the effect of shear deformation is very small and calculation of pier rigidities based on flexural stiffness is relatively accurate. For very squat walls (with $h/L < 0.25$), rigidities based on shear deformation are reasonably accurate, but for intermediate walls with h/L from 0.25 to 4, both components of relative rigidity should be considered.

G-3 The method is explained further explained by one illustration. For the wall as shown in Fig. 69,

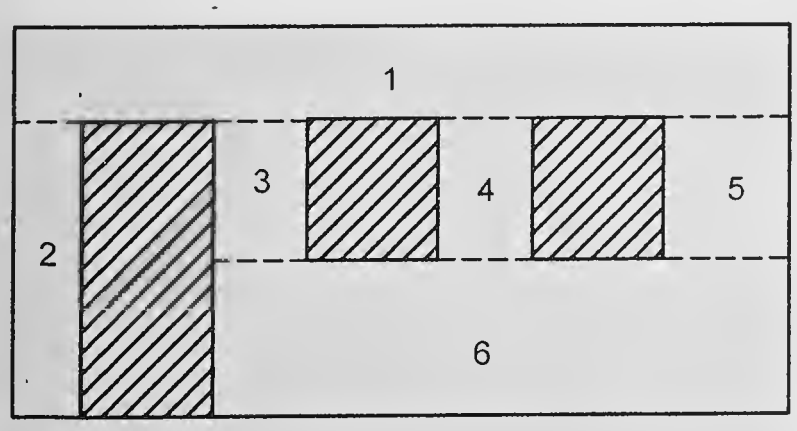

FIG. 69 WALL WITH OPENINGS (CALCULATION OF RIGIDITY AND LOAD DISTRIBUTION)

$$R_{\text{wall}} = \frac{1}{\Delta_{1c} + \Delta_{2,3,4,5,6(f)}} = \frac{1}{\dfrac{1}{R_{1c}} + \dfrac{1}{R_{2,3,4,5,6(f)}}}$$

(Vertical combination)

where

$R_{2,3,4,5,6(f)} = R_{2(f)} + R_{3,4,5,6(f)}$ (Horizontal combination)

and $R_{3,4,5,6(f)} = \dfrac{1}{\Delta_{3,4,5(f)} + \Delta_{6(f)}}$

$$= \frac{1}{\dfrac{1}{R_{3,4,5(f)}} + \dfrac{1}{R_{6(f)}}}$$

(Vertical combination)

$R_{3,4,5(f)} = R_{3(f)} + R_{4(f)} + R_{5(f)}$ (Horizontal combination)

ANNEX H

(*Clause* 11)

MASONRY WALLS USING RAT-TRAP BOND

H-1 GENERAL

The following covers the construction of masonry walls using rat-trap bond. Only masonry with bricks (burnt clay bricks, fly ash clay bricks, fly ash lime bricks and stabilized soil blocks) is dealt herein. Use of other types of bricks/blocks and mud mortar are not specifically covered hereunder.

H-2 NECESSARY INFORMATION

H-2.1 For efficient planning, design and execution of the work, detailed information with regard to the following shall be furnished to those responsible for the work:

a) Layout plans showing the orientation of the structure;

b) Dimensioned details of the structure with details of sections (to a suitably large scale that is 1 : 20), levels of foundation, finished ground level, clear floor to floor heights of rooms, sizes of openings, etc.

c) Type and class of brickwork, types of bond and final finish for the brickwork; the mixes of mortar to be used, etc; full size details of architectural features, mouldings and other special work. Also course plans at different levels of sill and lintel to be made available for proper understanding and execution, if required.

d) Location and other details of openings, chases, embedments of service lines, such as for water supply, drainage, electrical installations, etc; and location and details of hearths, flues and chimneys in the brickwork.

H-2.2 All information as in **H-2.1** shall be made available to those who are responsible for the masonry work. Necessary drawings and instructions for planning the work shall be furnished. Arrangements shall also be made for the proper exchange of information between those engaged in masonry work and all those whose work will affect or will be affected.

NOTE — If necessary a brief training of the masons may be carried out orienting them with the technology know-how.

H-3 MATERIALS

H-3.1 Bricks

Burnt clay bricks, heavy duty bricks and bricks made out of other suitable materials like fly ash, stabilized soil block, etc, conforming to accepted standards [6-4(21)] with compressive strength greater than 6.0 MPa shall be used.

H-3.2 Mortars

Shall conform to grade H2 mortar for good practice [6-4(3)].

H-3.3 Storage of Materials

Storage of materials shall be in accordance with good practice [6-4(1)].

H-3.4 Materials for Damp-Proof Courses

Materials for damp proof courses shall be as specified in good practice [6-4(5)].

H-3.5 Materials for Flashing and Weathering

Lead flashing with sheet thickness between 1.6 and 2 mm or bitumen felts shall be in accordance with the accepted standards [6-4(22)].

H-3.6 Metal Reinforcement

Metal reinforcement for use in brick masonry shall be as per accepted standards [6-4(23].

H-4 DESIGN CONSIDERATIONS

H-4.1 Selection of Bricks

The brick shall be selected in accordance with Table 1 of good practice [6-4(4)].

When the requirements for strength of masonry predominate in the particular situation of use, the bricks shall be of such class to give the required strength for masonry and shall be selected in accordance with 4.

H-4.2 Rat-Trap Bond Details

H-4.2.1 The rat-trap bond is laid by placing the bricks on edge forming a cavity of 80 mm (for a traditional brick size) with alternate courses of stretchers and headers (*see* Fig. 70). The headers and stretchers are

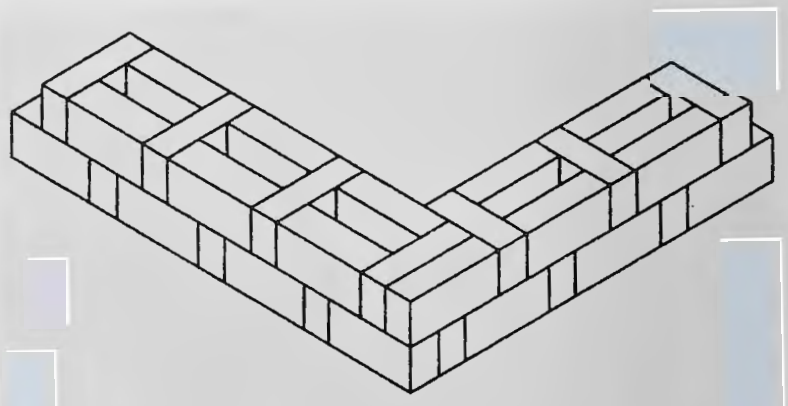

FIG. 70 ARRANGEMENT IN RAT-TRAP BOND

staggered in subsequent layers to impart strength and stability to the walls.

The primary object of bond is to give strength to masonry, but when exposed, it also creates aesthetically pleasing view. This masonry technology is modular in nature, so the dimensions of the wall to be based on the module dimensions in multiples.

H-4.2.2 A typical module detail is shown in Fig. 71 with conventional bricks of size 230 mm × 110 mm × 75 mm. The brick adjacent to the openings has to be solid as per Fig. 72. So the opening dimensions also to be in multiple of the rat-trap bond module. This will be important as opening dimensions are predefined depending on the module dimension. In brickwork the cross joints in any course shall not be nearer than a quarter of brick length from those in the course below or above it.

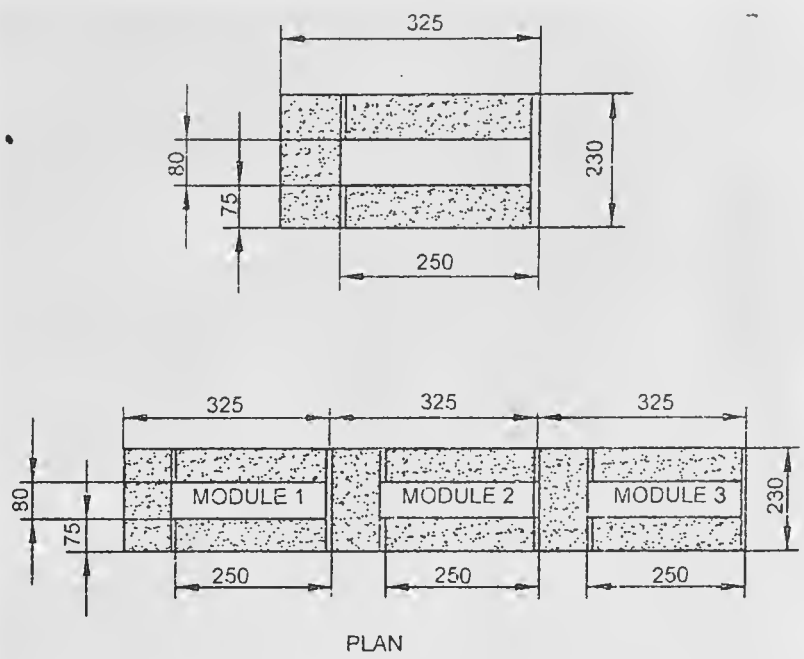

FIG. 71 TYPICAL MODULE DETAILS OF RAT-TRAP BOND

H-4.3 Precautions

This type of masonry construction shall have to be carried out by trained masons to avoid wastage of mortar falling into the gap. Rat-trap bond shall never be carried out with brick which are below their minimum strength requirements.

H-4.4 Strength of Rat-Trap Bond

Because of cavities the load carrying capacity of rat-trap bond wall is expected to be less than its counterpart solid wall. Normally a load bearing rat-trap bond wall of 230 mm thick can be constructed for a ground plus one storey building. If first class bricks are used, then it can be used for two storeyed building provided cross walls are included at intervals of 3.5 m or less.

The suggested testing methodology is given at **H-7** for ensuring conformity to the observed load capacity. Typical laying of rat-trap bond is shown in Fig. 73. The bricks used are conventional bricks 230 mm × 110 mm × 75 mm. The height of each course is 110 mm and the frog of the stretchers is kept facing each other in the cavity formed. This arrangement of bricks forms an internal air cavity of 80 mm (width) × 250 mm (length) × 110 mm (height).

H-4.5 Thickness of Joint

No bed joint shall be thicker than 12 mm. Further the thickness of the bed joints shall be such that four courses and three joints taken consecutively shall measure as follows:

a) *In the case of traditional bricks* — Four times the actual thickness of the brick plus 30 mm.

b) *In the case of modular bricks* — 390 mm conforming to the relevant accepted standards. The vertical mortar joints to be of the thickness of 10 mm and be applied directly to the brick before placing it. This requires some special skill, but defines the strength as well as the stability of the rat-trap bond wall. Besides, applying the mortar joint directly to the brick is a basic skill requirement of a mason and

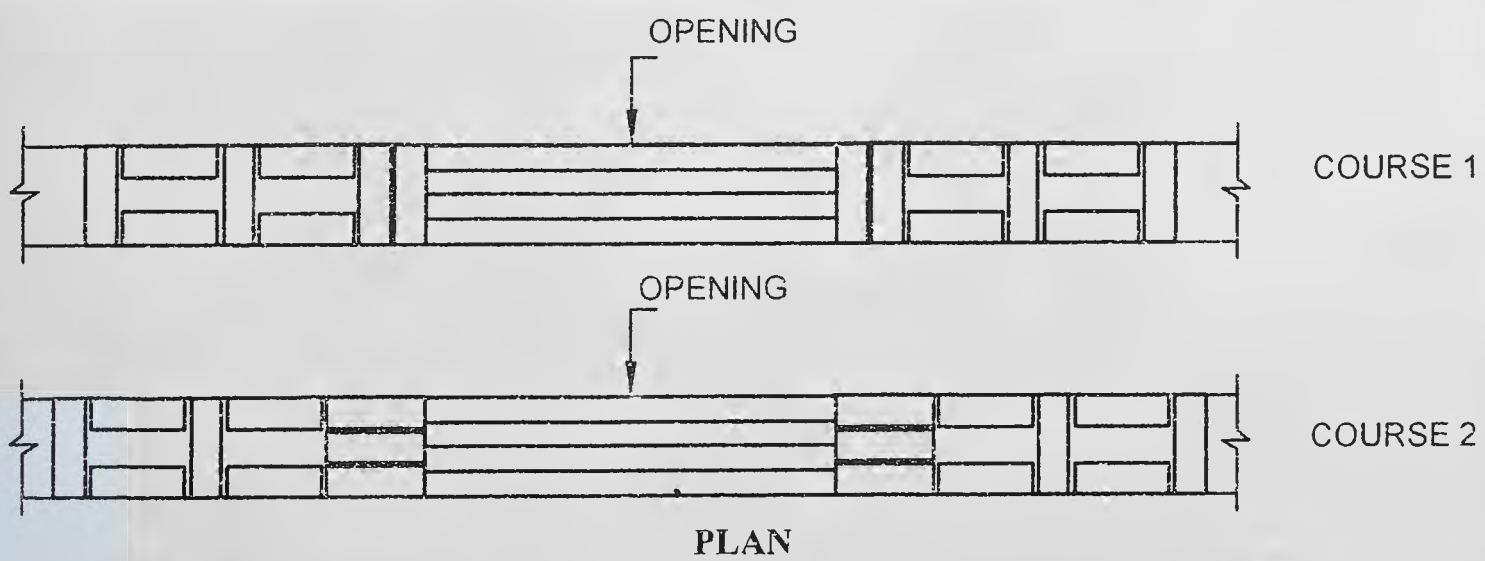

FIG. 72 OPENING IN RAT-TRAP BOND MASONRY

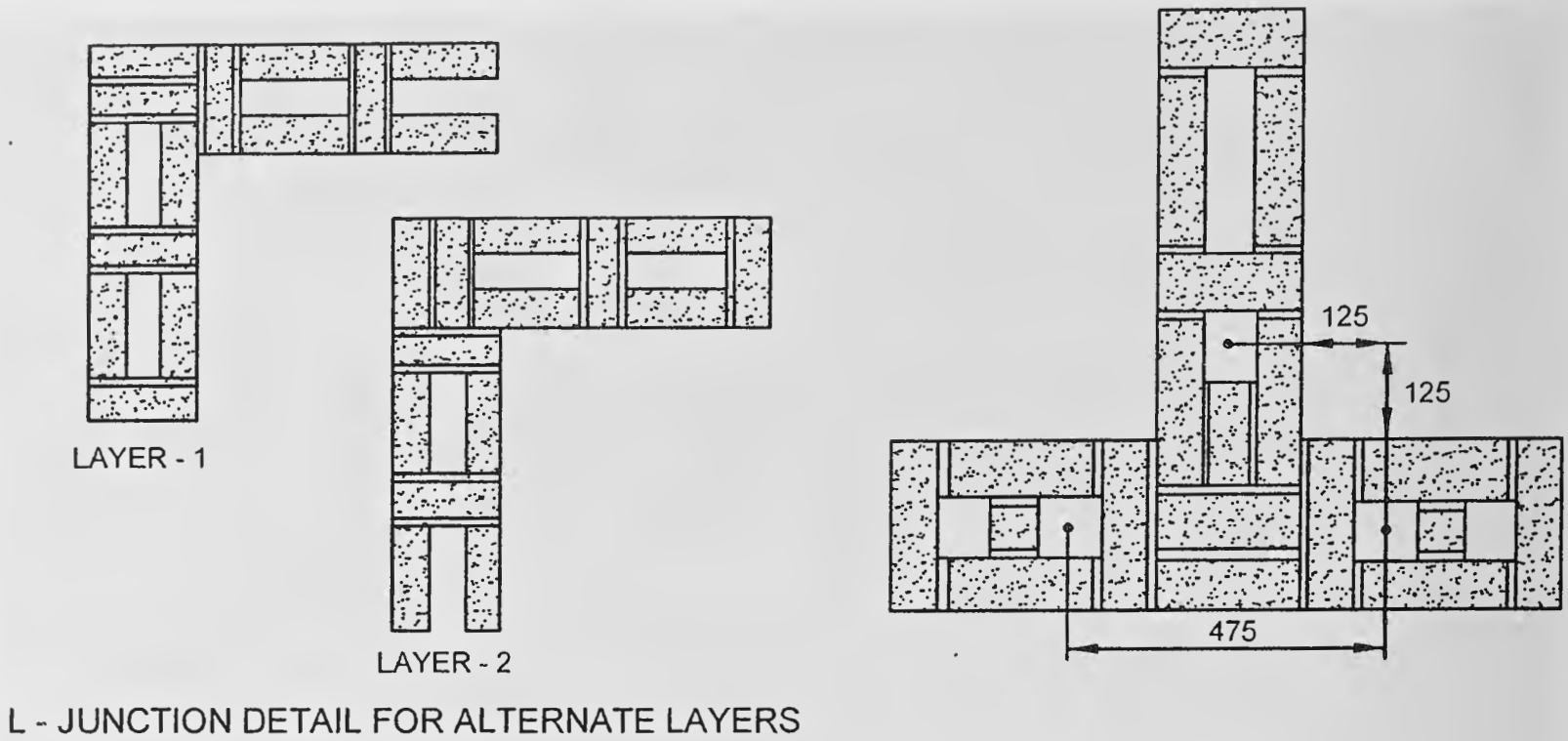

FIG. 73 TYPICAL LAYING OF RAT-TRAP BOND

determines the speed of work and finally the cost of the Rat-trap bond wall.

c) The face jolts of brickwork may be finished by 'jointing' or by 'pointing'. In case where brick size is less, the elevation of the header bricks to be made even in line with the stretcher brick by cement mortar same grade as bedding mortar. The main reasons for pointing the surface of block or brickwork joints are to increase its weather resistance and to give a neat finish to the work. Pointing can be carried out as construction of the brickwork proceeds, using ordinary mortar in which the bricks are bedded.

H-4.6 Structural and Functional Characteristics of Brickwork

H-4.6.1 *Structural Stability and Strength*

Reference may be made to Part 6 'Structural Design, Section 2 Soils and Foundation' of the Code, and **4** of this Section.

H-4.6.2 *Resistance to Moisture Penetration*

The suitability of various walls under different conditions of exposure is indicated in Table 3 of good practice [6-4(4)].

H-4.6.3 *Thermal Stresses*

The coefficient linear expansions of brick vary from $5\times10^{-6}/°C$ to $11\times10^{-6}/°C$. Variations of temperature tend to produce linear changes in walls which, when restrained, may lead to internal stress resulting in cracks especially when the walls exceed 30 m. The effects of these stresses shall be taken into consideration for a proper design.

H-4.7 Control of Shrinkage Cracking

H-4.7.1 To confine cracks to the joints and to dissipate these into a large number of fine joints, it is desirable that the mortar used shall be weaker than the bricks.

H-4.7.2 Cracking due to shrinkage normally will occur at openings or other points where the vertical or horizontal section of a wall changes. A long wall with a few openings will tend to show wider cracks above and below the openings than a similar wall with many openings. Metal reinforcement may be embedded in brickwork at points where cracking is likely to occur.

H-4.8 Thermal Insulation

For requirements of thermal insulation in walls, the provisions of good practice [6-4(24)] shall apply.

H-4.9 Fire Resistance

For requirements regarding resistance to fire, the provisions of good practice [6-4(25)] shall apply.

H-4.10 Sound Insulation

Requirements for insulation against airborne sound are laid down in good practice [6-4(26)] shall apply.

H-5 LAYING OF BRICKWORK

H-5.1 Brick shall be laid on a full bed of mortar. When laying the bricks, it shall be slightly pressed so that the mortar gets into all the pores of the brick surface to ensure proper adhesion. Cross joints and wall joints shall be properly flushed and packed with mortar so that no hollow spaces are left. Properly filled joints ensure maximum strength and resistance to penetration of moisture which takes place mainly through joints.

H-5.2 The following specific guidelines shall be followed:

a) In areas with a very high ground water table, it is advisable to build the first 4 to 5 courses of the wall, with either English or a Flemish bond. This is to avoid ground and spill water related dampness problems.

b) Always clean the surface where the first layer of bricks is to be laid, which is usually above the plinth level.

c) Arrange the joints between the bricks in such a way that only full bricks (shiners) fit. Ensure that the bonding is correct.

d) To properly maintain the brick cross, lay the first two masonry courses by marking mark each of the shiner and the header bricks at the centre.

e) Place the shiner/stretcher and header brick now in such a way that the marks are exactly matching. The remaining courses may then be laid to match with the first two courses.

f) Spread a full bed of mortar, and furrow it with a trowel. This will ensure that plenty of mortar is on the bottom of the bricks for the first course.

g) Lay the corner bricks first. Carefully position the corner bricks first. Be sure to lay all bricks with the frog inside the cavity of the wall in order to create an aesthetically pleasing outer wall surface.

h) The vertical mortar joints shall be applied directly to the brick before placing it. This requires some special skill, but defines the strength as well as the stability of the rat-trap bond wall.

j) The maximum rat-trap bond brick wall height per day should not exceed more than 9 layers.

k) Cavities of rat-trap bond shall be closed for the first course after damp proof course, below sill level, below and above lintel and at the top most course; this can be made by a layer of headers or headers.

H-5.3 Protection Against Damage

Care shall be taken during construction that edges of jambs, sills, heads, etc are not damaged. In inclement weather, newly built work shall be covered with gunny bags or tarpaulin so as to prevent the mortar from being washed away.

H-6 INSPECTION

H-6.1 General

The object of inspection of brick masonry work is to ensure its satisfactory performance and also to ascertain whether all the recommended practice of workmanship is adopted at every stage. As the correct strength of masonry cannot be ascertained without destruction, a close supervision during the course of construction is necessary to ensure satisfactory performance. The strength of brickwork depends on the strength of individual brick, strength of mortar, bond and workmanship.

H-6.2 Inspection of Materials

In case of large works, samples of bricks, sands, *Surkhi*, lime, cement, etc, which goes to form the brickwork, shall be periodically tested in a laboratory to make sure that they conform to the requirements stated in **H-3**. Simple field tests may suffice in the case of small works.

H-6.3 Inspection of Workmanship

A close supervision while the work is in progress will ensure a better quality work with the materials available for use. The following shall be observed at the time of inspection:

a) All loose materials, dirt and set lumps of mortar which may be lying over the surface over which brickwork is to be freshly started, shall be removed with a wire brush.

b) All the bricks shall be thoroughly soaked in potable water before use.

c) The surface over which the brickwork is to be started shall be made moist.

d) Plastic mortar results in thorough bedding of the brick and more complete filling of the joints which ensure greater strength. Care shall be taken to see that the required quantity of water is added to the mortar at the mixing platform itself and not over the courses.

e) All the joints shall, as far as possible, be thin and the specifications mentioned in **H-4.5** in this regard shall be strictly adhered to.

f) Care shall be taken to see that there is no through joints and the lap is not less than half the width of the brick, and that all the vertical joints are properly filled with mortar.

g) The verticality of the walls and horizontality of the courses shall be checked very often with plumb bob and spirit level respectively.

h) No portion of the work shall be left more than 1 m lower than the other. Where the masonry of one part has to be delayed the work shall be 'raked back' suitably at an angle not exceeding 45° according to bond and not toothed.

j) Where plastering is required to be done all the vertical as well as horizontal joints shall

be raked to a depth of about 10 mm while the mortar is wet, and this will ensure satisfactory adhesion between the plaster and brickwork, and

k) Care shall be taken to ensure that the brick work is kept wet for first seven days using appropriate curing methods.

H-7 TESTING METHOD FOR RAT-TRAP BOND WALL SAMPLES

H-7.1 A test specimen of two modules along the length should be taken (*see* Fig. 74). The specimen should be made with the same mortar as that to be used in structure. The specimen should be loaded in a compression testing machine and failure load to be observed. The height of the specimen should be four brick height. The header layer at top and bottom are intended to distribute the load. A similar test as above should be done in an English bond per coupon (*see* Fig. 75).

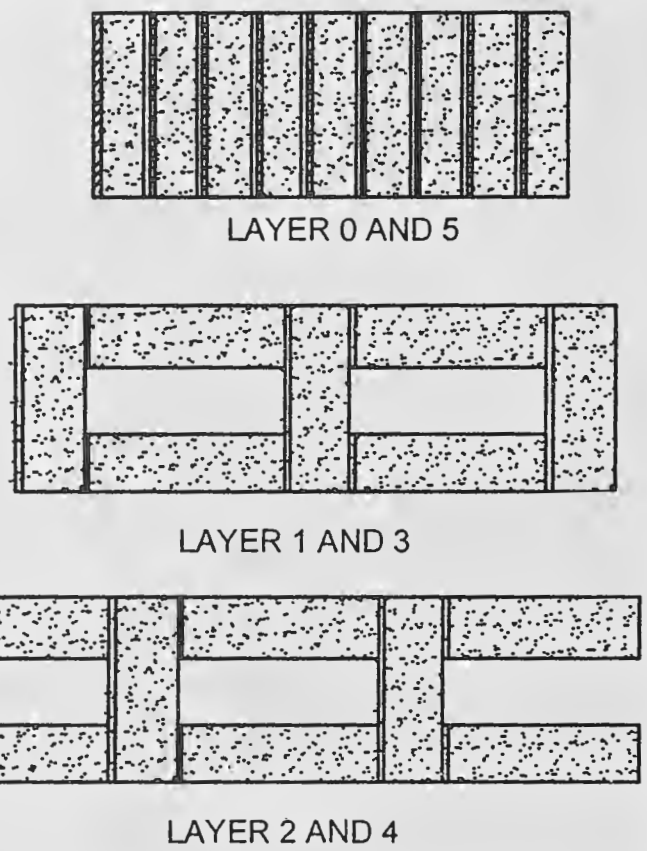

FIG. 74 RAT-TRAP BOND TEST SPECIMEN

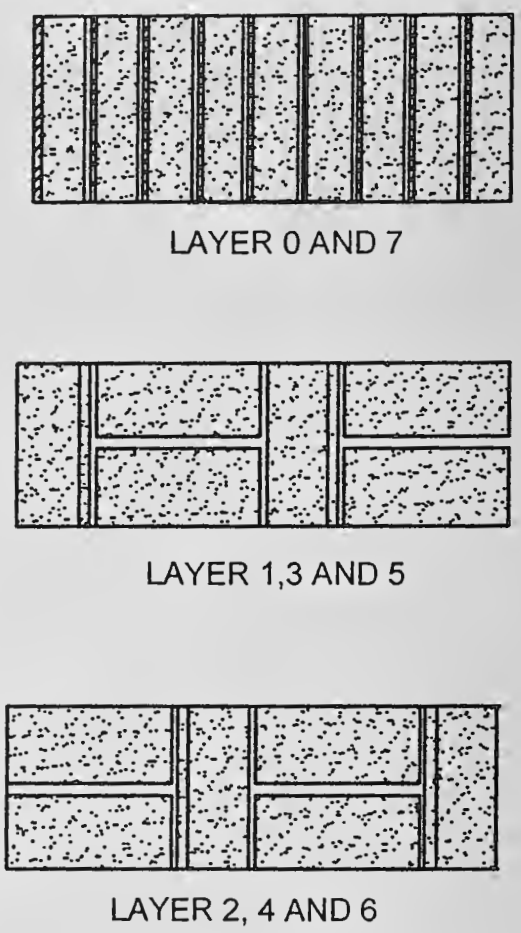

FIG. 75 ENGLISH BOND TEST SPECIMEN

H-7.2 The load on rat-trap bond specimen should be not less than 85 percent of the load capacity of English bond wall compressive strength.

H-7.3 While designing the compressive stress on rat-trap bond wall, it should be ensured that the stress is not more than 0.85 of that of solid wall as per **4** of this Section.

ANNEX J

(*Clause* 12)

NOTATIONS, SYMBOLS AND ABBREVIATIONS

J-1 The following notations, letter symbols and abbreviations shall have the meaning indicated against each, unless otherwise specified in the text of this Section of the Code:

A = Area of a section

b = Width of bearing

DPC = Damp proof course

e = Resultant eccentricity

f_b = Basic compressive stress

f_c = Permissible compressive stress

f_d = Compressive stress due to dead loads

f_s = Permissible shear stress

f_m = Compressive strength of masonry (in prism test)

GL = Ground level

H = Actual height between lateral supports

H' = Height of opening

$H1$, $H2$ = High strength mortars

h = Effective height between lateral supports

k_a = Area factor

k_p = Shape modification factor

k_s = Stress reduction factor

L = Actual length of wall

$L1$, $L2$ = Lower strength mortars

$M1$, $M2$ = Medium strength mortars

P = Total horizontal load

PL = Plinth level

RCC = Reinforced cement concrete

RS = Rolled steel

S_p = Spacing of piers/buttresses/cross walls

SR = Slenderness ratio

t = Actual thickness

t_p = Thickness of pier

t_w = Thickness of wall

W = Resultant load

W_1 = Axial load

W_2 = Eccentric load

w_p = Width of piers/buttresses/cross walls

μ = Ratio of flexural strength of wall in the vertical direction to that in the horizontal direction

LIST OF STANDARDS

The following list records those standards which are acceptable as 'good practice' and 'accepted standards' in the fulfillment of the requirements of the Code. The latest version of a standard shall be adopted at the time of enforcement of the Code. The standards listed may be used by the Authority for conformance with the requirements of the referred clauses in the Code.

In the following list, the number appearing in the first column within parentheses indicates the number of the reference in this Part/Section.

	IS No.	*Title*
(1)	1077 : 1992	Specification for common burnt clay building bricks (*fifth revision*)
	1725 : 2013	Stabilized soil blocks used in general building construction — Specification (*second revision*)
	2180 : 1988	Specification for heavy duty burnt clay building bricks (*third revision*)
	2185	Specification for concrete masonry units
	(Part 1) : 2005	Hollow and solid concrete blocks (*third revision*)
	(Part 2) : 1983	Hollow and solid light weight concrete blocks (*first revision*)
	(Part 3) : 1984	Autoclaved cellular aerated concrete blocks (*first revision*)
	(Part 4) : 2008	Preformed foam cellular concrete blocks
	2222 : 1991	Specification for burnt clay perforated building bricks (*third revision*)
	2849 : 1983	Specification for non-load bearing gypsum partition blocks (solid and hollow types) (*first revision*)
	3115 : 1992	Specification for lime based blocks (*second revision*)
	3316 : 1974	Specification for structural granite (*first revision*)

	IS No.	Title
	3620 : 1979	Specification for laterite stone block for masonry (*first revision*)
	3952 : 2013	Burnt clay hollow bricks and blocks for walls and partitions — Specification (*third revision*)
	4139 : 1989	Specification for calcium silicate bricks (*second revision*)
	12440 : 1988	Specification for precast concrete stone masonry blocks
	12894 : 2002	Specification for pulverized fuel ash lime bricks (*first revision*)
	13757 : 1993	Specification for burnt clay fly ash building bricks
(2)	4082 : 1996	Recommendations on stacking and storage of construction materials and components at site (*second revision*)
(3)	2250 : 1981	Code of practice for preparation and use of masonry mortars (*first revision*)
(4)	2110 : 1980	Code of practice for *in-situ* construction of walls, in building with soil-cement (*first revision*)
	2212 : 1991	Code of practice for brickwork (*first revision*)
	1597	Code of practice for construction of stone masonry
	(Part 1) : 1992	Rubble stone masonry (*first revision*)
	(Part 2) : 1992	Ashlar masonry (*first revision*)
	2572 : 2005	Code of practice for construction of hollow and solid concrete block masonry (*first revision*)
	2849 : 1983	Specification for non-load bearing gypsum partition blocks (solid and hollow types) (*first revision*)
	3630 : 1992	Code of practice for construction of non-load bearing gypsum block partitions (*first revision*)
	6041 : 1985	Code of practice for construction of autoclaved cellular concrete block masonry (*first revision*)
	6042 : 1969	Code of practice for construction of lightweight concrete block masonry
(5)	2212 : 1991	Code of practice for brickwork (*first revision*)
(6)	3414 : 1968	Code of practice for design and installation of joints in buildings
(7)	10440 : 1983	Code of practice for construction of RB and RBC floors and roofs
(8)	1893 : 1984	Criteria for earthquake resistant design of structures (*fourth revision*)
(9)	1893 (Part 1) : 2016	Criteria for earthquake resistant design of structures: Part 1 General provisions and buildings (*sixth revision*)
(10)	456 : 2000	Code of practice for plain and reinforced concrete (*fourth revision*)
(11)	13920 : 2016	Code of practice for ductile detailing of reinforced concrete structures subjected to seismic forces (*first revision*)
(12)	1077 : 1992	Specification for common burnt clay building bricks (*fifth revision*)
(13)	2185 (Part 1) : 2005	Concrete masonry units — Specification: Part 1 Hollow and solid concrete blocks (*third revision*)
(14)	1597 (Part 2) : 1992	Code of practice for construction of stone masonry: Part 2 Ashlar masonry (*first revision*)
(15)	2751 : 1979	Code of practice for welding of mild steel plain and deformed bars for reinforced concrete construction (*first revision*)
(16)	9417 : 1989	Welding — Cold-worked steel bars for reinforced concrete construction — Recommendations for welding (*first revision*)
(17)	883 : 2016	Code of practice for design of structural timber in building (*fifth revision*)
(18)	432 (Part 1) : 1982	Specification for mild steel and medium tensile steel bars and hard-drawn steel wire for concrete reinforcement: Part 1 Mild steel and medium tensile steel bars *(third revision)*
(19)	1786 : 2008	High strength deformed steel bars and wires for concrete reinforcement — Specification (*fourth revision*)
(20)	2502 : 1963	Code of practice for bending and fixing of bars for concrete reinforcement
(21)	1077 : 1992	Specification for common burnt clay building bricks (*fifth revision*)
	2180 : 1988	Specification for heavy duty burnt clay building bricks (*third revision*)
	1725 : 2013	Stabilized soil blocks used in general buildingconstruction — Specification (*second revision*)

IS No.	Title
(22) 405	Lead Sheets and Strips : Part 2
(Part 2) : 1992	For other than chemical purposes
1322 : 1993	Specification for bitumen felts for water proofing and damp-proofing (*fourth revision*)
(23) 432	Specification for mild steel and medium tensile steel bars and hard-drawn steel wire for concrete reinforcement.
(Part 1) : 1982	Mild steel and medium tensile steel bars (*third revision*)
(Part 2) : 1982	Hard-drawn steel wire (*third revision*)
1566 : 1982	Specification for hard-drawn steel wire fabric for concrete reinforcement (*second revision*)
412 : 1975	Expanded metal steel sheets for general purposes (*second revision*)
2062 : 2011	Hot rolled medium and high tensile structural steel (*seventh revision*)
(24) 3792 :1978	Guide for heat insulation of non-industrial buildings (*first revision*)
(25) 1642 : 2013	Code of practice for fire safety of buildings (general): Details of construction (*second revision*)
(26) 1950 : 1962	Code of practice for sound insulation of non-industrial buildings

NATIONAL BUILDING CODE OF INDIA

PART 6 STRUCTURAL DESIGN

Section 5 Concrete: 5A Plain and Reinforced Concrete

BUREAU OF INDIAN STANDARDS

CONTENTS

FOREWORD ... 5

SECTION 5A (A) GENERAL

1 SCOPE ... 7
2 TERMINOLOGY ... 7
3 SYMBOLS ... 7

SECTION 5A (B1) MATERIALS, WORKMANSHIP, INSPECTION AND TESTING

4 MATERIALS ... 8
5 CONCRETE ... 11
6 WORKABILITY OF CONCRETE ... 12
7 DURABILITY OF CONCRETE ... 13
8 CONCRETE MIX PROPORTIONING ... 17
9 PRODUCTION OF CONCRETE ... 19
10 FORMWORK ... 21
11 ASSEMBLY OF REINFORCEMENT ... 22
12 TRANSPORTING, PLACING, COMPACTION AND CURING ... 22
13 CONCRETING UNDER SPECIAL CONDITIONS ... 24
14 SAMPLING AND STRENGTH OF DESIGNED CONCRETE MIX ... 25
15 ACCEPTANCE CRITERIA ... 26
16 INSPECTION AND TESTING OF STRUCTURES ... 26

SECTION 5A (B2) SPECIAL CONCRETE

16A SELF COMPACTING CONCRETE ... 27
16B HIGH PERFORMANCE CONCRETE ... 30

SECTION 5A (C) GENERAL DESIGN CONSIDERATION

17 BASES FOR DESIGN ... 32
18 LOADS AND FORCES ... 32
19 STABILITY OF THE STRUCTURE ... 33
20 FIRE RESISTANCE ... 33
21 ANALYSIS ... 34
22 BEAMS ... 37
23 SOLID SLABS ... 39
24 COMPRESSION MEMBERS ... 41
25 REQUIREMENTS GOVERNING REINFORCEMENT AND DETAILING ... 41
26 EXPANSION JOINTS ... 49

SECTION 5A (D) SPECIAL DESIGN REQUIREMENTS FOR STRUCTURAL MEMBERS AND SYSTEMS

27 CONCRETE CORBELS ... 49
28 DEEP BEAMS ... 50
29 RIBBED, HOLLOW BLOCK OR VOIDED SLAB ... 51
30 FLAT SLABS ... 52
31 WALLS ... 60
32 STAIRS ... 62
33 FOOTINGS ... 62

SECTION 5A (E) STRUCTURAL DESIGN (LIMIT STATE METHOD)

34 SAFETY AND SERVICEABILITY REQUIREMENTS ... 65

35 CHARACTERISTIC AND DESIGN VALUES AND PARTIAL SAFETY FACTORS ... 65

36 ANALYSIS ... 66

37 LIMIT STATE OF COLLAPSE: FLEXURE ... 67

38 LIMIT STATE OF COLLAPSE: COMPRESSION ... 67

39 LIMIT STATE OF COLLAPSE: SHEAR ... 69

40 LIMIT STATE OF COLLAPSE: TORSION ... 72

41 LIMIT STATE OF SERVICEABILITY: DEFLECTION ... 73

42 LIMIT STATE OF SERVICEABILITY: CRACKING ... 73

ANNEX A DESIGN OF STEEL FIBRE REINFORCED CONCRETE ... 73

ANNEX B STRUCTURAL DESIGN (WORKING STRESS METHOD) ... 84

ANNEX C CALCULATION OF DELEFCTION ... 91

ANNEX D SLABS SPANNING IN TWO DIRECTIONS ... 92

ANNEX E EFFECTIVE LENGTH OF COLUMNS ... 94

ANNEX F DUCTILE DESIGN AND DETAILING OF REINFORCED CONCRETE STRUCTURES SUBJECTED TO SEISMIC FORCES ... 97

ANNEX G CALCULATION OF CRACK WIDTH ...114

ANNEX H MOMENTS OF RESISTANCE FOR RECTANGULAR AND T-SECTIONS ...115

LIST OF STANDARDS ...116

FOREWORD

This Code (Part 6/Subsection 5A) covers the structural design aspects of plain and reinforced concrete.

The Section 5 of Part 6 of the Code covers plain and reinforced concrete and also the prestressed concrete. The Section has been subdivided into the following subsections:

5A Plain and Reinforced Concrete

5B Prestressed Concrete

This Subsection 5A was first published in 1970 as Subsection 5A of SP 7 (Part 6) and was subsequently revised in 1983 and 2005, to bring it in line with revised version of IS 456 : 1978 and IS 456 : 2000, respectively on which this chapter was based.

The second revision (NBC 2005) incorporated a number of important changes. The major thrust being:

a) In recent years, durability of concrete structures have become the cause of concern to all concrete technologists. This has led to codify the durability requirements world over. In this revision of the Code, in order to introduce in-built protection from factors affecting a structure, earlier clause on durability has been elaborated and a detailed clause covering different aspects of design of durable structure has been incorporated.

b) Sampling and acceptance criteria for concrete have been revised. With this revision acceptance criteria has been simplified in line with the provisions given in BS 5328 (Part 4) : 1990 'Concrete: Part 4 Specification for the procedures to be used in sampling, testing and assessing compliance of concrete'.

Some of the significant changes incorporated in the 2005 version were: inclusion of all the three grades of ordinary Portland cement, namely 33 Grade, 43 Grade and 53 Grade and sulphate resisting Portland cement in the list of types of cement used (in addition to other types of cement); modification of the permissible limits for solids in water keeping in view the durability requirements; modification of the clause on admixtures in view of the availability of new types of admixtures including superplasticizers; inclusion of grades higher than M 40 in Table 2 'Grades of Concrete'; recommendations regarding minimum grade of concrete to be not less than M 20 in reinforced concrete work (*see also* **5.1.3**); revision of the formula for estimation of modulus of elasticity of concrete; specification of workability only in terms of slump, in the absence of proper correlation between compacting factor, vee-bee time and slump, modification of the clause on 'Durability' to include detailed guidance concerning the factors affecting durability; modification of the table on 'Environmental Exposure Conditions' to include 'very severe' and 'extreme' exposure conditions, also covering requirements for shape and size of member, depth of concrete cover, concrete quality, requirement against exposure to aggressive chemical and sulphate attack, minimum cement requirement and maximum water cement ratio, limits of chloride content, alkali silica reaction, and importance of compaction, finishing and curing; incorporation of a clause on 'Quality Assurance Measures' to give due emphasis to good practices of concreting; introduction of proper limits on the accuracy of measuring equipments to ensure accurate batching of concrete; modification of the clause on 'Construction Joints'; and modification of the clause on 'Inspection' to give more emphasis on quality assurance.

The significant changes incorporated in Section 5A (C) of the 2005 version were: detailing of requirements for 'Fire Resistance'; modification of the figure for estimation of modification factor for tension reinforcement used in calculation of basic values of span to effective depth to control the deflection of flexural member; addition of recommendations regarding effective length of cantilever; addition of recommendations regarding deflection due to lateral loads; inclusion of recommendations for adjustments of support moments in restrained slabs; introduction of stability index in the determination of effective length of compression members, to determine sway or no sway conditions; inclusion of recommendations for lap length of hooks for bars in direct tension and flexural tension; modification of recommendations regarding strength of welds; modification in recommendations regarding cover to reinforcement; prescription of cover based on durability requirements for different exposure conditions; introduction of the term 'nominal cover'; and prescription of the cover based on durability requirement as well as for fire requirements.

The significant change incorporated in Section 5A (D) of the 2005 version included modification of the clause on walls. The modified clause includes design of walls against horizontal shear.

In Section 5 of the 2005 version on limit state method, a new clause was added for calculation of enhanced shear strength of sections close to supports. Some modifications were also made in the clause on Torsion. Formula for calculation of crack width were added (separately in Annex F).

Working stress method was added in Annex A so as to give greater emphasis to limit state design. In this annex, modifications regarding torsion and enhanced shear strength on the same lines as in Section 5 have been made.

Whilst the common methods of design and construction have been covered in this code, special systems of design and construction of any plain or reinforced concrete structure not covered by this code may be permitted on production of satisfactory evidence regarding their adequacy and safety by analysis or test or both (*see* **18**).

In this Code it has been assumed that the design of plain and reinforced cement concrete work is entrusted to a qualified engineer and that the execution of cement concrete work is carried out under the direction of a qualified and experience supervisor.

In this third revision of this Subsection, the following major modifications have been incorporated:

a) All the 4 amendments so far issued to IS 456 : 2000 'Code of practice for plain and reinforced concrete (*fourth revision*)' have been incorporated.
b) Provisions relating to use of mineral admixtures, their effects on properties of fresh and hardened concrete have been elaborated, including precautions associated therewith.
c) Aggregates from other than natural sources, including iron slag aggregate, steel slag aggregate, copper slag aggregate, bottom ash from thermal power plant, and aggregate derived from construction and demolition waste, have been included through cross reference to the revised IS 383, namely IS 383 : 2016 'Specification for coarse and fine aggregate for concrete (*third revision*)'.
d) Provisions relating to stripping time of forms for beams and slabs have been modified, also emphasizing the need for immediate replacement of props have been included.
e) The stripping time in case of the concrete made using cement other than OPC or using cementitious materials like fly ash and slag, has been specified, also giving guidance on minimum cube strength requirements of concrete before removal of formwork in case provision of stripping time applicable for concrete made using OPC, is to be used.
f) Provisions related to self compacting concrete (SCC) and high performance concrete (HPC) have been included as part of special concretes.
g) Design provisions related to steel fibre reinforced concrete have been included as part of special concretes.
h) Provisions related to shear stress for coupled shear walls have been included.
j) Comprehensive provisions on ductile detailing have been included from IS 13920 : 2016 'Code of practice for ductile detailing of reinforced concrete structures subjected to seismic forces (*first revision*)' to help extensive implementation of ductile detailing provisions in all relevant structures.
k) List of Indian Standards referred as good practice has been updated, especially in view of formulation of a number of new/revision of Indian Standards relating to concrete.

This Subsection is largely based on the following Indian Standards:

IS 456 : 2000	Code of practice for plain and reinforced concrete (*fourth revision*)
IS 13920 : 2016	Code of practice for ductile detailing of reinforced concrete structures subjected to seismic forces (*first revision*)

All standards, whether given herein above or cross-referred to in the main text of this Subsection, are subject to revision. The parties to agreement based on this Subsection are encouraged to investigate the possibility of applying the most recent editions of the standards.

For the purpose of deciding whether a particular requirement of this Subsection is complied with, the final value, observed or calculated, expressing the result of a test or analysis, shall be rounded off in accordance with IS 2 : 1960 'Rules for rounding off numerical values (*revised*)'. The number of significant places retained in the rounded off value should be the same as that of the specified value in this Subsection.

NATIONAL BUILDING CODE OF INDIA

PART 6 STRUCTURAL DESIGN

Section 5 Concrete: 5A Plain and Reinforced Concrete

SECTION 5A (A) GENERAL

1 SCOPE

1.1 This Code (Part 6/Subsection 5A) deals with the general structural use of plain and reinforced concrete.

1.1.1 For the purpose of this Subsection, plain concrete structures are those where reinforcement, if provided is ignored for determination of strength of the structure.

1.2 Special requirements of structures, such as shells, folded plates, arches, chimneys, blast resistant structures, hydraulic structures, liquid retaining structures and earthquake resistant structures, covered in respective Indian Standards, have not been covered in this Subsection; these Indian Standards shall be used in conjunction with this Subsection. *See* good practices [6-5A(1)].

2 TERMINOLOGY

For the purpose of this Subsection, the definitions given in accepted standards [6-5A(2)] shall apply.

3 SYMBOLS

For the purpose of this Subsection, the following letter symbols shall have the meaning indicated against each; where other symbols are used, they are explained at the appropriate place:

A — Area

b — Breadth of beam, or shorter dimension of a rectangular column

b_{ef} — Effective width of slab

b_f — Effective width of flange

b_w — Breadth of web or rib

D — Overall depth of beam or slab or diameter of column; dimension of a rectangular column in the direction under consideration

D_f — Thickness of flange

DL — Dead load

d — Effective depth of beam or slab

d' — Depth of compression reinforcement from the highly compressed face

E_c — Modulus of elasticity of concrete

EL — Earthquake load

E_s — Modulus of elasticity of steel

e — Eccentricity

f_{ck} — Characteristic cube compressive strength of concrete

f_{cr} — Modulus of rupture of concrete (flexural tensile strength)

f_{ct} — Splitting tensile strength of concrete

f_d — Design strength

f_y — Characteristic strength of steel

H_w — Unsupported height of wall

H_{we} — Effective height of wall

I_{ef} — Effective moment of inertia

I_{gr} — Moment of inertia of the gross section excluding reinforcement

I_r — Moment of inertia of cracked section

K — Stiffness of member

k — Constant or coefficient or factor

L_d — Development length

LL/IL — Live load or imposed load

l — Length of a column or beam between adequate lateral restraints or the unsupported length of a column

l_{ef} — Effective span of beam or slab or effective length of column

l_{ex} — Effective length about x-x axis

l_{ey} — Effective length about y-y axis

l_n — Clear span, face-to-face of supports

l_n' — l_n for shorter of the two spans at right angles

l_x — Length of shorter side of slab

l_y — Length of longer side of slab

l_0 — Distance between points of zero moments in a beam

l_1 — Span in the direction in which moments are determined, centre-to-centre of supports

l_2 — Span transverse to l_1, centre-to-centre of supports

l_2' — l_2 for the shorter of the continuous spans

M — Bending moment

m — Modular ratio

n — Number of samples

P — Axial load on a compression member

q_o — Calculated maximum bearing pressure of soil

R — Radius

s — Spacing of stirrups or standard deviation

T — Torsional moment

t — Wall thickness

V — Shear force

W — Total load

WL — Wind Load

w — Distributed load per unit area

w_d — Distributed dead load per unit area

w_l — Distributed imposed load per unit area

x — Depth of neutral axis

Z — Modulus of section

z — Lever arm

α, β — Angle or ratio

γ_f — Partial safety factor for load

γ_m — Partial safety factor for material

δ_m — Percentage reduction in moment

ε_{cc} — Creep strain of concrete

σ_{cbc} — Permissible stress in concrete in bending compression

σ_{cc} — Permissible stress in concrete in direct compression

σ_{mc} — Permissible stress in metal in direct compression

σ_{sc} — Permissible stress in steel in compression

σ_{st} — Permissible stress in steel in tension

σ_{sv} — Permissible stress in shear reinforcement

τ_{bd} — Design bond stress

τ_c — Shear stress in concrete

$\tau_{c,max}$ — Maximum shear stress in concrete with shear reinforcement

τ_v — Nominal shear stress

Φ — Diameter of bar

SECTION 5A (B1) MATERIALS, WORKMANSHIP, INSPECTION AND TESTING

4 MATERIALS

4.1 Cement

The cement used shall be any of the following conforming to accepted standards [6-5A(3)] and the type selected should be appropriate for the intended use:

a) Ordinary Portland cement,

b) Rapid-hardening Portland cement,

c) Portland slag cement,

d) Portland pozzolana cement (fly ash based),

e) Portland pozzolana cement (calcined clay based),

f) Hydrophobic cement,

g) Low heat Portland cement, and

h) Sulphate resisting Portland cement.

Other combinations of Portland cement with mineral admixture (*see* **4.2**) of quality conforming with relevant Indian Standards laid down may also be used in the manufacture of concrete provided that there are satisfactory data on their suitability, such as performance test on concrete containing them.

4.1.1 Low heat Portland cement conforming to accepted standards [6-5A(4)] shall be used with adequate precautions with regard to removal of formwork, etc.

4.1.2 High alumina cement conforming to accepted standard [6-5A(5)] or supersulphated cement conforming to accepted standard [6-5A(6)] may be used only under special circumstances with the prior approval of the Engineer-in-Charge. Specialist literature may be consulted for guidance regarding the use of these types of cements.

4.1.3 The attention of the Engineer-in-Charge and users of cement is drawn to the fact that quality of various cements mentioned in **4.1** is to be determined on the basis of its conformity to the performance characteristics given in the respective Indian Standard specification for that cement. Any trade-mark or any trade name indicating any special features not covered in the standard or any qualification or other special performance characteristics sometimes claimed/ indicated on the bags or containers or in advertisements alongside the 'Statutory Quality Marking' or otherwise have no relation whatsoever with the characteristics guaranteed by the Quality Marking as relevant to that cement. Consumers are, therefore, advised to go by the characteristics as given in the corresponding Indian Standard Specification or seek specialist advice to avoid any problem in concrete making and construction.

4.2 Mineral Admixtures

Mineral admixtures listed below may be used along with ordinary Portland cement. Uniform blending of the additions with the cement should be ensured. For this purpose, specific facility is required to be available at the construction site or RMC plant.

NOTE — In case more than one type of mineral admixture is to be used in the same concrete or mineral admixture is used along with blended cement, the necessary trials for suitability of concrete so made shall be done and duly approved by the Engineer-in-Charge.

4.2.1 *Pozzolanas*

Pozzolanic materials as given below may be used.

4.2.1.1 *Fly ash (pulverized fuel ash)*

Fly ash conforming to accepted standard [6-5A(7)] may be used as part replacement of ordinary Portland cement.

4.2.1.2 *Silica fume*

Silica fume conforming to accepted standard [6-5A(8)] may be used as part replacement of ordinary Portland cement. Silica fume is usually used in proportion of 5 to 10 percent of the cement.

4.2.1.3 *Rice husk ash*

Rice husk ash giving required performance and uniformity characteristics may be used with the approval of the Engineer-in-Charge.

NOTE — Rice husk ash is produced by burning rice husk and contains large proportion of silica. To achieve amorphous state, rice husk may be burnt at controlled temperature. It is necessary to evaluate the product from a particular source for performance and uniformity since it can be as deleterious as silt when incorporated in concrete. Water demand and drying shrinkage should be studied before using rice husk.

4.2.1.4 *Metakaolin*

Metakaolin conforming to accepted standard [6-5A(9)] may be used as part replacement of ordinary Portland cement.

4.2.2 *Ground Granulated Blast Furnace Slag*

Ground granulated blast furnace slag obtained by grinding granulated blast furnace slag conforming to accepted standards [6-5A(10)] may be used as part replacement of ordinary Portland cement.

4.2.3 *Precautions*

4.2.3.1 For concrete made with mineral admixtures, the setting time and rate of gain of strength may be different from those of concrete made with ordinary Portland cement alone. Cognizance of such modified properties shall be taken into account in deciding de-shuttering time, rate of movement of formwork in slipform construction, initial time of prestressing, longer curing period and for early age loading. The compatibility of chemical admixtures and cementitious materials should be ensured by trials.

Concrete containing mineral admixtures generally have equal or improved finishability compared to similar concrete mixes without them. Mixes that contain high dosages of mineral admixtures, specially silica fume, can be sticky and difficult to finish.

Concrete containing mineral admixtures may exhibit an increase in plastic shrinkage cracking because of its low bleeding characteristics. The problem may be avoided by ensuring that such concrete is protected against drying, both during and after finishing.

4.2.3.2 Compatibility of chemical admixtures and superplasticizers conforming to accepted standards [6-5A(11)] with the binder system shall be ensured by trials.

4.2.3.3 Some other properties of concrete such as modulus of elasticity, tensile strength, creep and shrinkage are not likely to be significantly different. For design purposes, it will be sufficiently accurate to adopt the same values as those used for concrete made with ordinary Portland cement alone.

4.3 *Aggregates*

Aggregates, derived from natural sources and from other than natural sources, shall comply with the requirements of accepted standards [6-5A(12)].

4.3.1 Other types of aggregates such as crushed overburnt brick or tile, which may be found suitable with regard to strength, durability of concrete and freedom from harmful effects may be used for plain concrete members, but such aggregates should not contain more than 0.5 percent of sulphates as SO_3 and should not absorb more than 10 percent of their own mass of water.

4.3.2 Heavy weight aggregates or light weight aggregates such as bloated clay aggregates and sintered fly ash aggregates may also be used provided the Engineer-in-Charge is satisfied with the data on the properties of concrete made with them.

NOTE — Some of the provisions of the code would require modification when these aggregates are used; specialist literature may be consulted for guidance.

4.3.3 *Size of Aggregate*

The nominal maximum size of coarse aggregate should be as large as possible within the limits specified but in no case greater than one-fourth of the minimum thickness of the member, provided that the concrete can be placed without difficulty so as to surround all reinforcement thoroughly and fill the corners of the form. For most work, 20 mm aggregate is suitable. Where there is no restriction to the flow of concrete into sections, 40 mm or larger size may be permitted. In concrete elements with thin sections, closely spaced reinforcement or small cover, consideration should be given to the use of 10 mm nominal maximum size.

Plums above 160 mm and up to any reasonable size may be used in plain concrete work up to a maximum limit of 20 percent by volume of concrete when specifically permitted by the Engineer-in-Charge. The plums shall be distributed evenly and shall be not closer than 150 mm from the surface.

4.3.3.1 For heavily reinforced concrete members as in the case of ribs of main beams, the nominal maximum

size of the aggregate should usually be restricted to 5 mm less than the minimum clear distance between the main bars or 5 mm less than the minimum cover to the reinforcement whichever is smaller.

4.3.4 Coarse and fine aggregate shall be batched separately.

4.4 Water

Water, natural or treated, used for mixing and curing shall be clean and free from injurious amounts of oils, acids, alkalis, salts, sugar, organic materials or other substances that may be deleterious to concrete or steel.

Potable water is generally considered satisfactory for mixing concrete. As a guide the following concentrations represent the maximum permissible values:

a) To neutralize 100 ml sample of water, using phenolphthalein as an indicator, it should not require more than 5 ml of 0.02 normal NaOH. The details of test are given in **7.1** of good practice [6-5A(13)].

b) To neutralize 100 ml sample of water, using mixed indicator, it should not require more than 25 ml of 0.02 normal H_2SO_4. The details of test shall be as given in 7 of good practice [6-5A(13)].

c) Permissible limits for solids shall be as given in Table 1.

Table 1 Permissible Limit for Solids

(*Clause* 4.4)

Sl No.	Parameter	Tested as Per	Permissible Limit *Max*
(1)	(2)	(3)	(4)
i)	Organic	Good practice [6-5A(13)]	200 mg/l
ii)	Inorganic	Good practice [6-5A(13)]	3 000 mg/l
iii)	Sulphates (as SO_3)	Good practice [6-5A(13)]	400 mg/l
iv)	Chlorides (as Cl)	Good practice [6-5A(13)]	2 000 mg/l for concrete not containing embedded steel and 500 mg/l for reinforced concrete work
v)	Suspended matter	Good practice [6-5A(13)]	2 000 mg/l

4.4.1 In case of doubt regarding development of strength, the suitability of water for making concrete shall be ascertained by the compressive strength and initial setting time tests specified in **4.4.1.2** and **4.4.1.3**.

4.4.1.1 The sample of water taken for testing shall represent the water proposed to be used for concreting, due account being paid to seasonal variation. The sample shall not receive any treatment before testing other than that envisaged in the regular supply of water proposed for use in concrete. The sample shall be stored in a clean container previously rinsed out with similar water.

4.4.1.2 Average 28 days compressive strength of at least three 150 mm concrete cubes prepared with water proposed to be used shall not be less than 90 percent of the average of strength of three similar concrete cubes prepared with distilled water. The cubes shall be prepared, cured and tested in accordance with good practice [6-5A(14)].

4.4.1.3 The initial setting time of test block made with the appropriate cement and the water proposed to be used shall not be less than 30 min and shall not differ by ± 30 min from the initial setting time of control test block prepared with the same cement and distilled water. The test blocks shall be prepared and tested in accordance with the good practice [6-5A(15)].

4.4.2 The *p*H value of water shall be not less than 6.

4.4.3 *Sea Water*

Sea water shall not be used for mixing or curing of concrete because of presence of harmful salts. Under unavoidable circumstances sea water may be used for mixing or curing in plain concrete with no embedded steel after having given due consideration to possible disadvantages and precautions including use of appropriate cement system.

4.4.4 Water found satisfactory for mixing is also suitable for curing concrete. However, water used for curing should not produce any objectionable stain or unsightly deposit on the concrete surface.

4.5 Chemical Admixtures

4.5.1 Admixture, if used shall comply with accepted standards [6-5A(15)]. Previous experience with and data on such materials should be considered in relation to the likely standards of supervision and workmanship to the work being specified.

4.5.2 Admixtures should not impair durability of concrete nor combine with the constituent to form harmful compounds nor increase the risk of corrosion of reinforcement.

4.5.3 The workability, compressive strength and the slump loss of concrete with and without the use of admixtures shall be established during the trial mixes before use of admixtures.

4.5.4 The relative density of liquid admixtures shall be checked for each drum containing admixtures and compared with the specified value before acceptance.

4.5.5 The chloride content of admixtures shall be independently tested for each batch before acceptance.

4.5.6 If two or more admixtures are used simultaneously in the same concrete mix, data should be obtained to assess their interaction and to ensure their compatibility.

4.5.7 The amount of admixture added to a mix shall be recorded in the production record. Redosing of admixtures is not normally permitted. In special circumstances, if necessary, additional dose of admixture may be added at project site and mixed adequately in mixer itself to regain the workability of concrete with the mutual agreement between the producer/supplier and the purchaser/user of concrete. However, the producer/supplier shall assure the ultimate quality of concrete supplied by him and maintain record of quantity and time of addition.

4.6 Reinforcement

The reinforcement shall be any of the following conforming to the accepted standards [6-5A(16)]:

a) Mild steel and medium tensile steel bars.
b) High strength deformed steel bars.
c) Hard-drawn steel wire fabric.
d) Structural steel of Grade A.

4.6.1 All reinforcement shall be free from loose mill scales, loose rust and coats of paints, oil, mud or any other substances which may destroy or reduce bond. Sand blasting or other treatment is recommended to clean reinforcement.

4.6.2 Special precautions like coating of reinforcement may be required for reinforced concrete elements in exceptional cases and for rehabilitation of structures. Specialist literature may be referred to in such cases. Reduction in design bond strength of coated bars shall be looked into.

4.6.3 The modulus of elasticity of steel shall be taken as 200 kN/mm^2. The characteristic yield strength of different steel shall be assumed as the minimum yield stress/0.2 percent proof stress specified in the relevant Indian Standard.

4.7 Fibres

Fibres may be added to concrete for special applications to enhance properties, for which specialist literature may be referred to. *See also* **16B**.

4.8 Storage of Materials

Storage of materials shall be as described in good practice [6-5A(17)].

5 CONCRETE

5.1 Grades

The concrete shall be in grades designated as per Table 2.

Table 2 Grades of Concrete

(*Clauses* 5.1, 8.2.2, 14.1.1 *and* 35.1)

Sl No.	Group	Grade Designation	Specified Characteristic Compressive Strength of 150 mm Cube at 28 Days N/mm^2
(1)	(2)	(3)	(4)
i)	Ordinary concrete	M 10	10
		M 15	15
		M 20	20
ii)	Standard concrete	M 25	25
		M 30	30
		M 35	35
		M 40	40
		M 45	45
		M 50	50
		M 55	55
		M 60	60
iii)	High strength concrete	M 65	65
		M 70	70
		M 75	75
		M 80	80
		M 90	90
		M 95	95
		M 100	100

NOTES

1 In the designation of concrete mix, M refers to the mix and the number to the specified compressive strength of 150 mm size cube at 28 days, expressed in N/mm^2.

2 For concrete of grades above M 60, design parameters given in the standard may not be applicable and the values may be obtained from specialized literatures and experimental results.

5.1.1 The characteristic strength is defined as the strength of material below which not more than 5 percent of the test results are expected to fall.

5.1.2 The minimum grade of concrete for plain and reinforced concrete shall be as per Table 5.

5.1.3 Concrete of grades lower than those given in Table 5 may be used for lean concrete, foundation for masonry walls or temporary reinforced concrete construction.

5.2 Properties of Concrete

5.2.1 *Increase of Strength with Age*

There is normally a gain of strength beyond 28 days.

The quantum of increase depends upon the grade and type of cement, curing and environmental conditions, etc. The design should be based on 28 days characteristic strength of concrete unless there is an evidence to justify a higher strength for a particular structure due to age.

5.2.1.1 For concrete of grade M 30 and above, the rate of increase of compressive strength with age shall be based on actual investigations.

5.2.1.2 Where members are subjected to lower direct load during construction, they should be checked for stresses resulting from combination of direct load and bending during construction.

5.2.2 *Tensile Strength of Concrete*

The flexural and splitting tensile strengths shall be obtained in accordance with good practice [6-5A(18)]. When the designer wishes to use an estimate of the tensile strength from the compressive strength, the following formula may be used:

Flexural strength, $f_{cr} = 0.7\sqrt{f_{ck}}$ N/mm^2

where

f_{ck} = characteristic cube compressive strength of concrete, in N/mm^2.

5.2.3 *Elastic Deformation*

The modulus of elasticity is primarily influenced by the elastic properties of the aggregate and to a lesser extent by the conditions of curing and age of the concrete, the mix proportions and the type of cement. The modulus of elasticity is normally related to the compressive strength of concrete.

5.2.3.1 The modulus of elasticity of concrete can be assumed as follows:

$$E_c = 5\ 000\sqrt{f_{ck}}$$

where

E_c = short term static modulus of elasticity, in N/mm^2.

Actual measured values may differ by ±20 percent from the values obtained from the above expression.

5.2.4 *Shrinkage*

The total shrinkage of concrete depends upon the constituents of concrete, size of the member and environmental conditions. For a given humidity and temperature, the total shrinkage of concrete is most influenced by the total amount of water present in the concrete at the time of mixing and, to a lesser extent, by the cement content.

5.2.4.1 In the absence of test data, the approximate value of the total shrinkage strain for design may be taken as 0.000 3 {for more information, *see* accepted standard [6-5A(19)]}.

5.2.5 *Creep of Concrete*

Creep of concrete depends, in addition to the factors listed in **5.2.4**, on the stress in the concrete, age at loading and the duration of loading. As long as the stress in concrete does not exceed one-third of its characteristic compressive strength, creep may be assumed to be proportional to the stress.

5.2.5.1 In the absence of experimental data and detailed information on the effect of the variables, the ultimate creep strain may be estimated from the following values of creep coefficient (that is, ultimate creep strain/elastic strain at the age of loading); for long span structure, it is advisable to determine actual creep strain, likely to take place:

Age at Loading	*Creep Coefficient*
7 days	2.2
28 days	1.6
1 year	1.1

NOTE — The ultimate creep strain, estimated as described above does not include the elastic strain.

5.2.6 *Thermal Expansion*

The coefficient of thermal expansion depends on nature of cement, the aggregate, the cement content, the relative humidity and the size of sections.

The value of coefficient of thermal expansion for concrete with different aggregates may be taken as given below:

Type of Aggregate	*Coefficient of Thermal Expansion for Concrete/°C*
Quartzite	1.2 to 1.3 × 10^{-5}
Sandstone	0.9 to 1.2 × 10^{-5}
Granite	0.7 to 0.95 × 10^{-5}
Basalt	0.8 to 0.95 × 10^{-5}
Limestone	0.6 to 0.9 × 10^{-5}

6 WORKABILITY OF CONCRETE

6.1 The concrete mix proportions chosen should be such that the concrete is of adequate workability for the placing conditions of the concrete and can properly be compacted with the means available. Suggested ranges of workability of concrete measured in accordance with good practice [6-5A(20)] are given below:

Sl No.	Placing Conditions	Degree of Workability	Slump mm
(1)	(2)	(3)	(4)
i)	Blinding concrete; Shallow sections; Pavements using pavers	Very low	*See* **6.1.1**
ii)	Mass concrete; Lightly reinforced sections in slabs, beams, walls, columns; Floors; Hand placed pavements; Canal lining; Strip footings	Low	25-75
iii)	Heavily reinforced sections in slabs, beams, walls, columns	Medium	50-100
iv)	Slipform work	Medium	75-100
v)	Pumpable concrete	High	100-125
vi)	Trench fill	High	100-150
vii)	Tremie concrete	Very high	*See* **6.1.2**

NOTE — For most of the placing conditions, internal vibrators (needle vibrators) are suitable. The diameter of the needle shall be determined based on the density and spacing of reinforcement bars and thickness of sections. For tremie concrete, vibrators are not required to be used (*see also* **12.3**).

6.1.1 In the 'very low' category of workability where strict control is necessary, for example pavement quality concrete, measurement of workability by determination of compacting factor will be more appropriate than slump (*see* accepted standard [6-5A(20)]) and a value of compacting factor of 0.75 to 0.80 is suggested.

6.1.2 In the 'very high' category of workability, measurement of workability by determination of flow will be appropriate {*see* accepted standard [6-5A(11)]}.

7 DURABILITY OF CONCRETE

7.1 General

A durable concrete is one that performs satisfactorily in the working environment during its anticipated exposure conditions during service life. The materials and mix proportions specified and used should be such as to maintain its integrity and, if applicable, to protect embedded metal from corrosion.

7.1.1 One of the main characteristics influencing the durability of concrete is its permeability to the ingress of water, oxygen, carbon dioxide, chloride, sulphate and other potentially deleterious substances. Impermeability is governed by the constituents and workmanship used in making the concrete. With normal-weight aggregates a suitably low permeability is achieved by having an adequate cement content, sufficiently low free water/cement ratio, by ensuring complete compaction of the concrete, and by adequate curing.

The factors influencing durability include,

a) the environment;
b) the cover to embedded steel;
c) the type and quality of constituent materials;
d) the cement content and water/cement ratio of the concrete;
e) workmanship, to obtain full compaction and efficient curing; and
f) the shape and size of the member.

The degree of exposure anticipated for the concrete during its service life together with other relevant factors relating to mix composition, workmanship, design and detailing should be considered. Maintenance plays an important role in sustained durability of concrete (*see also* **9.1**). The concrete mix to provide adequate durability under these conditions should be chosen taking account of the accuracy of current testing regimes for control and compliance as described in this Section.

7.2 Requirements for Durability

7.2.1 *Shape and Size of Member*

The shape or design details of exposed structures should be such as to promote good drainage of water and to avoid standing pools and rundown of water. Care should also be taken to minimise any cracks that may collect or transmit water. Adequate curing is essential to avoid the harmful effects of early loss of moisture (*see* **12.5**). Member profiles and their intersections with other members shall be designed and detailed in a way to ensure easy flow of concrete and proper compaction during concreting.

Concrete is more vulnerable to deterioration due to chemical or climatic attack when it is in thin sections, in sections under hydrostatic pressure from one side only, in partially immersed sections and at corners and edges of elements. The life of the structure can be lengthened by providing extra cover to steel, by chamfering the corners or by using circular cross-sections or by using surface coatings which prevent or reduce the ingress of water, carbon dioxide or aggressive chemicals.

7.2.2 *Exposure Conditions*

7.2.2.1 *General environment*

The general environment to which the concrete will be exposed during its working life is classified into five levels of severity, that is, mild, moderate, severe, very severe and extreme as described in Table 3.

Table 3 Environmental Exposure Conditions

(*Clauses* 7.2.2.1 *and* 34.3.2)

Sl No.	Environment	Exposure Conditions
(1)	(2)	(3)
i)	Mild	Concrete surfaces protected against weather or aggressive conditions, except those situated in coastal area
ii)	Moderate	a) Concrete surfaces sheltered from severe rain or freezing whilst wet b) Concrete exposed to condensation and rain c) Concrete continuously under water d) Concrete in contact or buried under non-aggressive soil/ground water e) Concrete surfaces sheltered from saturated salt air in coastal area
iii)	Severe	a) Concrete surfaces exposed to severe rain, alternate wetting and drying or occasional freezing whilst wet or severe condensation b) Concrete completely immersed in sea water c) Concrete exposed to coastal environment
iv)	Very severe	a) Concrete surfaces exposed to sea water spray, corrosive fumes or severe freezing conditions whilst wet b) Concrete in contact with or buried under aggressive sub-soil/ground water
v)	Extreme	a) Surface of members in tidal zone b) Members in direct contact with liquid/solid aggressive chemicals

7.2.2.2 *Abrasion*

Abrasion of concrete surfaces results from friction, which may cause a grinding action; or by repetitive impact and overloading, which causes local crushing.

Abrasion resistant surfaces primarily involve consideration of surface finishing technique curing regime, aggregate characteristics and cement content. Compressive strength of concrete may also provide a relative indication of resistance.

Specialist literatures may be referred to for durability requirements of concrete surfaces exposed to abrasive action, for example, in case of machinery and metal tyres.

7.2.2.3 *Freezing and thawing*

Where freezing and thawing actions under wet conditions exist, enhanced durability can be obtained by the use of suitable air entraining admixtures. When concrete lower than grade M 50 is used under these conditions, the mean total air content by volume of the fresh concrete at the time of delivery into the construction should be:

Nominal Maximum Size Aggregate mm	*Entrained Air Percentage*
10	7 ± 1
20	5 ± 1
40	4 ± 1

Since air entrainment reduces the strength, suitable adjustments may be made in the mix design for achieving required strength.

7.2.2.4 *Exposure to sulphate attack*

Table 4 gives recommendations for the type of cement, maximum free water/cement ratio and minimum cement content, which are required at different sulphate concentrations in near-neutral ground water having *p*H of 6 to 9.

For the very high sulphate concentrations in Class 5 conditions, some form of lining such as polyethylene or polychloroprene sheet; or surface coating based on asphalt, chlorinated rubber, epoxy; or polyurethane materials should also be used to prevent access by the sulphate solution.

7.2.3 *Requirement of Concrete Cover*

7.2.3.1 The protection of the steel in concrete against corrosion depends upon an adequate thickness of good quality concrete.

7.2.3.2 The nominal cover to the reinforcement shall be provided as per **25.4**.

7.2.4 *Concrete Mix Proportions*

7.2.4.1 *General*

The free water-cement ratio is an important factor in governing the durability of concrete and should always be the lowest value. Appropriate values for minimum cement content and the maximum free water-cement ratio are given in Table 5 for different exposure conditions. The minimum cement content and maximum water-cement ratio apply to 20 mm nominal maximum size aggregate. For other sizes of aggregate they should be changed as given in Table 6.

7.2.4.2 *Maximum cement content*

Cement content not including fly ash and ground granulated blast furnace slag in excess of 450 kg/m^3 should not be used unless special consideration has been given in design to the increased risk of cracking due to drying shrinkage in thin sections, or to early thermal cracking and to the increased risk of damage due to alkali silica reactions.

Table 4 Requirements for Concrete Exposed to Sulphate Attack

(*Clauses* 7.2.2.4 *and* 8.1.2)

Sl No.	Class	Concentration of Sulphates, Expressed as SO_3			Type of Cement	Dense, Fully Compacted Concrete, Made with 20 mm Nominal Maximum Size Aggregates in Accordance with Accepted Standard [6-5A(12)]	
		In Soil		In Ground Water			
		Total SO_3	SO_3 in 2:1 Water: Soil Extract			Minimum Cement Content kg/m³	Maximum Free Water-Cement Ratio
		Percent	g/l	g/l			
(1)	(2)	(3)	(4)	(5)	(6)	(7)	(8)
i)	1	Traces (<0.2)	Less than 1.0	Less than 0.3	Ordinary Portland cement or Portland slag cement or Portland pozzolana cement	280	0.55
ii)	2	0.2 to 0.5	1.0 to 1.9	0.3 to 1.2	Ordinary Portland cement or Portland slag cement or Portland pozzolana cement	330	0.50
					Supersulphated cement or sulphate resisting Portland cement	310	0.50
iii)	3	0.5 to 1.0	1.9 to 3.1	1.2 to 2.5	Supersulphated cement or sulphate resisting Portland cement	330	0.50
					Portland pozzolana cement or Portland slag cement	350	0.45
iv)	4	1.0 to 2.0	3.1 to 5.0	2.5 to 5.0	Supersulphated or sulphate resisting Portland cement	370	0.45
v)	5	More than 2.0	More than 5.0	More than 5.0	Sulphate resisting Portland cement or supersulphated cement with protective coatings	400	0.40

NOTES

1 Cement content given in this table is irrespective of grades of cement.

2 Use of supersulphated cement is generally restricted where the prevailing temperature is above 40°C.

3 Supersulphated cement gives an acceptable life provided that the concrete is dense and prepared with a water-cement ratio of 0.4 or less, in mineral acids, down to *p*H 3.5.

4 The cement contents given in col 7 of this table are the minimum recommended. For SO_3 contents near the upper limit of any class, cement contents above these minimum are advised. For the purpose of calculation of SO_3 content (if the test results are in the form of SO_4), the following relation shall be used: $SO_3 = 0.833\ SO_4$.

5 For severe conditions, such as thin sections under hydrostatic pressure on one side only and sections partly immersed, considerations should be given to a further reduction of water-cement ratio.

6 Portland slag cement conforming to accepted standard [6-5A(21)] with slag content more than 50 percent exhibits better sulphate resisting properties.

7 Where chloride is encountered along with sulphates in soil or ground water, ordinary Portland cement with C_3A content from 5 to 8 percent shall be desirable to be used in concrete, instead of sulphate resisting cement. Alternatively, Portland slag cement conforming to accepted standard [6-5A(21)] having more than 50 percent slag or a blend of ordinary Portland cement and slag may be used.

7.2.5 *Mix Constituents*

7.2.5.1 *General*

For concrete to be durable, careful selection of the mix and materials is necessary, so that deleterious constituents do not exceed the limits.

7.2.5.2 *Chlorides in concrete*

Whenever there is chloride in concrete there is an increased risk of corrosion of embedded metal. The higher the chloride content, or if subsequently exposed to warm moist conditions, the greater the risk of corrosion. All constituents may contain chlorides and concrete may be contaminated by chlorides from the external environment. To minimise the chances of deterioration of concrete from harmful chemical salts, the levels of such harmful salts in concrete coming from concrete materials, that is, cement, aggregates, water and admixtures, as well as by diffusion from the environment should be limited. The total amount of chloride content (as Cl) in the concrete at the time of placing shall be as given in Table 7.

The total acid soluble chloride content should be calculated from the mix proportions and the measured chloride contents of each of the constituents. Wherever possible, the total chloride content of the concrete should be determined.

7.2.5.3 *Sulphates in concrete*

Sulphates are present in most cements and in some

Table 5 Minimum Cement Content, Maximum Water-Cement Ratio and Minimum Grade of Concrete for Different Exposures with Normal Weight Aggregates of 20 mm Nominal Maximum Size

(*Clauses* 5.1.2, 5.1.3, 7.2.4.1 *and* 8.1.2)

Sl No.	Exposure	Plain Concrete			Reinforced Concrete		
		Minimum Cement Content kg/m³	Maximum Free Water-Cement Ratio	Minimum Grade of Concrete	Minimum Cement Content kg/m³	Maximum Free Water-Cement Ratio	Minimum Grade of Concrete
(1)	(2)	(3)	(4)	(5)	(6)	(7)	
i)	Mild	220	0.60	?	300	0.55	M 20
ii)	Moderate	240	0.60	M 15	300	0.50	M 25
iii)	Severe	250	0.50	M 20	320	0.45	M 30
iv)	Very severe	260	0.45	M 20	340	0.45	M 35
v)	Extreme	280	0.40	M 25	360	0.40	M 40

NOTES

1 Cement content prescribed in this table is irrespective of grades and types of cement and is inclusive of mineral admixtures mentioned in **4.2**. The mineral admixtures such as fly ash or ground granulated blast furnace slag shall be taken into account in the concrete composition with respect to the minimum cement content and maximum water-cement ratio not exceeding the limit of fly ash and slag specified in accordance with accepted standards [6-5A(22)] and [6-5A(21)], beyond which these additions, though permitted, shall not be considered for these purposes.

2 Minimum grade for plain concrete under mild exposure condition is not specified.

3 The minimum cement content, maximum free water-cement ratio and minimum grade of concrete are individually related to

Table 6 Adjustments to Minimum Cement Contents for Aggregates Other than 20 mm Nominal Maximum Size

(*Clause* 7.2.4.1)

Sl No.	Nominal Maximum Aggregate Size mm	Adjustments to Minimum Cement Contents in Table 5 kg/m³
(1)	(2)	(3)
i)	10	+40
ii)	20	0
iii)	40	–30

Table 7 Limits of Chloride Content of Concrete

(*Clause* 7.2.5.2)

Sl No.	Type or Use of Concrete	Maximum Total Acid Soluble Chloride Content Expressed as kg/m³ of Concrete
(1)	(2)	(3)
i)	Concrete containing metal and steam cured at elevated temperature and prestressed concrete	0.4
ii)	Reinforced concrete or plain concrete containing embedded metal	0.6
iii)	Concrete not containing embedded metal or any material requiring protection from chloride	3.0

aggregates; excessive amounts of water-soluble sulphate from these or other mix constituents can cause expansion and disruption of concrete. To prevent this, the total water-soluble sulphate content of the concrete mix, expressed as SO_3 (where $SO_3 = 0.833\ SO_4$), should not exceed 4 percent by mass of the cement in the mix. The sulphate content should be calculated as the total from the various constituents of the mix.

The 4 percent limit does not apply to concrete made with supersulphated cement complying with accepted standard [6-5A(6)].

7.2.5.4 *Alkali-aggregate reaction*

Some aggregates containing particular varieties of silica may be susceptible to attack by alkalis (Na_2O and K_2O) originating from cement or other sources, producing an expansive reaction which can cause cracking and disruption of concrete. Damage to concrete from this reaction will normally only occur when all the following are present together:

a) A high moisture level, within the concrete;
b) A cement with high alkali content, or another source of alkali; and
c) Aggregate containing an alkali reactive constituent.

Where the service records of particular cement/aggregate combination are well established, and do not include any instances of cracking due to alkali-aggregate reaction, no further precautions should be necessary. When the materials are unfamiliar, precautions should take one or more of the following forms:

a) Use of non-reactive aggregate from alternate sources.

b) Use of low alkali ordinary Portland cement having total alkali content not more than 0.6 percent (as Na_2O equivalent).

Further advantage can be obtained by use of fly ash conforming to accepted standard [6-5A(7)] or granulated blast furnace slag conforming to accepted standard [6-5A(10)] as part replacement of ordinary Portland cement (having total alkali content as Na_2O equivalent not more than 0.6 percent), provided fly ash content is at least 25 percent or slag content is at least 50 percent.

c) Measures to reduce the degree of saturation of the concrete during service such as use of impermeable membranes.

d) Limiting the cement content in the concrete mix and thereby limiting total alkali content in the concrete mix. For more guidance, specialist literatures may be referred.

7.2.6 *Concrete in Aggressive Soils and Water*

7.2.6.1 *General*

The destructive action of aggressive waters on concrete is progressive. The rate of deterioration decreases as the concrete is made stronger and more impermeable, and increases as the salt content of the water increases. Where structures are only partially immersed or are in contact with aggressive soils or waters on one side only, evaporation may cause serious concentrations of salts with subsequent deterioration, even where the original salt content of the soil or water is not high.

NOTE — Guidance regarding requirements for concrete exposed to sulphate attack is given in **7.2.2.4**.

7.2.6.2 *Drainage*

At sites where alkali concentrations are high or may become very high, the ground water should be lowered by drainage so that it will not come into direct contact with the concrete.

Additional protection may be obtained by the use of suitable impermeable barriers.

7.2.7 *Compaction, Finishing and Curing*

Adequate compaction without segregation should be ensured by providing suitable workability and by employing appropriate placing and compacting equipment and procedures. Full compaction is particularly important in the vicinity of construction and movement joints and of embedded water bars and reinforcement.

Good finishing practices are essential for durable concrete.

Overworking the surface and the addition of water/cement to aid in finishing should be avoided; the resulting laitance will have impaired strength and durability and will be particularly vulnerable to freezing and thawing under wet conditions.

It is essential to use proper and adequate curing techniques to reduce the permeability of the concrete and enhance its durability by extending the hydration of the cement, particularly in its surface zone (*see* **12.5**).

7.2.8 *Concrete in Sea-Water*

Concrete in sea-water or exposed directly along the sea-coast shall be at least M 20 Grade in the case of plain concrete and M 30 in case of reinforced concrete. The use of slag or pozzolana cement is advantageous under such conditions.

7.2.8.1 Special attention shall be given to the design of the mix to obtain the densest possible concrete; slag, broken brick, soft limestone, soft sandstone, or other porous or weak aggregates shall not be used.

7.2.8.2 As far as possible, preference shall be given to precast members unreinforced, well-cured and hardened, without sharp corners, and having trowel-smooth finished surfaces free from crazing, cracks or other defects; plastering should be avoided.

7.2.8.3 No construction joints shall be allowed within 600 mm below low water-level or within 600 mm of the upper and lower planes of wave action. Where unusually severe conditions or abrasion are anticipated, such parts of the work shall be protected by bituminous or silico-fluoride coatings or stone facing bedded with bitumen.

7.2.8.4 In reinforced concrete structures, care shall be taken to protect the reinforcement from exposure to saline atmosphere during storage, fabrication and use. It may be achieved by treating the surface of reinforcement with cement wash or by suitable methods.

8 CONCRETE MIX PROPORTIONING

8.1 Mix Proportion

The mix proportion shall be selected to ensure the workability of the fresh concrete and when concrete is hardened, it shall have the required strength, durability and surface finish.

8.1.1 The determination of the proportions of cement, aggregates and water to attain the required strengths shall be made as follows:

a) By designing the concrete mix; such concrete shall be called 'Design mix concrete', or

b) By adopting nominal concrete mix; such concrete shall be called 'Nominal mix concrete'.

Design mix concrete is preferred to nominal mix. If design mix concrete cannot be used for any reason on the work for grades of M 20 or lower, nominal mixes may be used with the permission of Engineer-in-Charge, which, however, is likely to involve a higher cement content.

8.1.2 *Information Required*

In specifying a particular grade of concrete, the following information shall be included:

a) Type of mix, that is, design mix concrete or nominal mix concrete;
b) Grade designation;
c) Type of cement;
d) Maximum nominal size of aggregate;
e) Minimum cement content (for design mix concrete);
f) Maximum water-cement ratio;
g) Workability;
h) Mix proportion (for nominal mix concrete);
j) Exposure conditions as per Tables 4 and 5;
k) Maximum temperature of concrete at the time of placing;
m) Method of placing; and
n) Degree of supervision.

8.1.2.1 In appropriate circumstances, the following additional information may be specified:

a) Type of aggregate,
b) Maximum cement content, and
c) Whether an admixture shall or shall not be used and the type of admixture and the condition of use.

8.2 Design Mix Concrete

8.2.1 As the guarantor of quality of concrete used in the construction, the constructor shall carry out the mix design and the mix so designed (not the method of design) shall be approved by the employer within the limitations of parameters and other stipulations laid down by this standard. If so desired, the employer shall be provided with supporting data including graphs showing strength versus water-cement ratio for range of proportions, complete trial mix proportioning details to substantiate the choice of cement content, fine and coarse aggregate content, water, mineral admixtures, chemical admixtures, etc.

8.2.2 The mix shall be designed to produce the grade of concrete having the required workability and a characteristic strength not less than appropriate values given in Table 2. Proportion/grading of aggregates shall be made by trial in such a way as to make densest possible concrete. The target mean strength of concrete mix should be equal to the characteristic strength plus 1.65 times the standard deviation.

8.2.3 Mix design done earlier not prior to one year may be considered adequate for later work provided there is no change in source and the quality of the materials.

8.2.4 *Standard Deviation*

The standard deviation for each grade of concrete shall be calculated. separately.

8.2.4.1 *Standard deviation based on test strength of sample*

a) *Number of test results of samples* — The total number of test strength of samples required to constitute an acceptable record for calculation of standard deviation shall be not less than 30. Attempts should be made to obtain the 30 samples, as early as possible, when a mix is used for the first time.
b) *In case of significant changes in concrete* — When significant changes are made in the production of concrete batches (for example changes in the materials used, mix design, equipment or technical control), the standard deviation value shall be separately calculated for such batches of concrete.
c) *Standard deviation to be brought up to date* — The calculation of the standard deviation shall be brought up to date after every change of mix design.

8.2.4.2 *Assumed standard deviation*

Where sufficient test results for a particular grade of concrete are not available, the value of standard deviation given in Table 8 may be assumed for design of mix in the first instance. As soon as the results of samples are available, actual calculated standard deviation shall be used and the mix designed properly. However, when adequate past records for a similar grade exist and justify to the designer a value of standard deviation different from that shown in Table 8, it shall be permissible to use that value.

8.3 Nominal Mix Concrete

Nominal mix concrete may be used for concrete of M 20 or lower. The proportions of materials for nominal mix concrete shall be in accordance with Table 9.

8.3.1 The cement content of the mix specified in Table 9 for any nominal mix shall be proportionately increased if the quantity of water in a mix has to be increased to overcome the difficulties of placement and compaction, so that the water-cement ratio as specified is not exceeded.

Table 8 Assumed Standard Deviation

(*Clause* 8.2.4.2 *and* Table 11)

Sl No.	Grade of Concrete	Assumed Standard Deviation N/mm²
(1)	(2)	(3)
i)	M 10	3.5
ii)	M 15	
iii)	M 20	4.0
	M 25	
iv)	M 30	5.0
v)	M 35	
vi)	M 40	
vii)	M 45	
viii)	M 50	
ix)	M 55	
x)	M 60	

NOTES

1 The above values correspond to the site control having proper storage of cement; weigh batching of all materials; controlled addition of water; regular checking of all materials, aggregate grading and moisture content; and periodical checking of workability and strength. Where there is deviation from the above, the values given in the above table shall be increased by 1 N/mm².

2 For grades above M 60, the standard deviation shall be established by actual trials based on assumed proportions, before finalizing the mix.

Table 9 Proportions for Nominal Mix Concrete

(*Clauses* 8.3 *and* 8.3.1)

Sl No.	Grade of Concrete	Total Quantity of Dry Aggregates by Mass per 50 kg of Cement, to be Taken as the Sum of the Individual Masses of Fine and Coarse Aggregates kg *Max*	Proportion of Fine Aggregate to Coarse Aggregate (by Mass)	Quantity of Water per 50 kg of Cement l *Max*
(1)	(2)	(3)	(4)	(5)
i)	M 5	800	Generally 1:2 but subject to an upper limit of 1 : 1½ and a lower limit of 1 : 2½	60
ii)	M 7.5	625		45
iii)	M 10	480		34
iv)	M 15	330		32
v)	M 20	250		30

NOTES

1 The proportion of the fine to coarse aggregates should be adjusted from upper limit to lower limit progressively as the grading of fine aggregates becomes finer and the maximum size of coarse aggregate becomes larger. Graded coarse aggregate shall be used.

Example

For an average grading of fine aggregate {that is, Zone II of Table 4 of the accepted standard [6-5A(12)]}, the proportions shall be 1:1½, 1:2 and 1:2½ for maximum size of aggregates 10 mm, 20 mm and 40 mm, respectively.

2 Quantity of water required from durability point of view may be less than the value given above.

9 PRODUCTION OF CONCRETE

9.1 Quality Assurance Measures

9.1.1 In order that the properties of the completed structure be consistent with the requirements and the assumptions made during the planning and the design, adequate quality assurance measures shall be taken. The construction should result in satisfactory strength, serviceability and long term durability so as to lower the overall life-cycle cost. Quality assurance in construction activity relates to proper design, use of adequate materials and components to be supplied by the producers, proper workmanship in the execution of works by the contractor and ultimately proper care during the use of structure including timely maintenance and repair by the owner. The maintenance plays an important role in sustained durability of concrete.

9.1.2 Quality assurance measures are both technical and organizational. Some common cases should be specified in a general Quality Assurance Plan which shall identify the key elements necessary to provide fitness of the structure and the means by which they are to be provided and measured with the overall purpose to provide confidence that the realized project will work satisfactorily in service fulfilling intended needs. The job of quality control and quality assurance would involve quality audit of both the inputs as well as the outputs. Inputs are in the form of materials for concrete; workmanship in all stages of batching, mixing, transportation, placing, compaction and curing; and the related plant, machinery and equipment; resulting in the output in the form of concrete in place. To ensure proper performance, it is necessary that each step in concreting which will be covered by the next step is inspected as the work proceeds (*see also* **16**).

9.1.3 Each party involved in the realization of a project should establish and implement a Quality Assurance Plan, for its participation in the project. Supplier's and subcontractor's activities shall be covered in the plan. The individual Quality Assurance Plans shall fit into the general Quality Assurance Plan. A Quality Assurance Plan shall define the tasks and responsibilities of all persons involved, adequate control and checking procedures, and the organization and maintaining adequate documentation of the building process and its results. Such documentation should generally include,

a) test reports and manufacturer's certificate for materials, concrete mix design details;
b) pour cards for site organization and clearance for concrete placement;
c) record of site inspection of workmanship, field tests;
d) non-conformance reports, change orders;
e) quality control charts; and
f) statistical analysis.

NOTE — Quality control charts are recommended, wherever the concrete is in continuous production over considerable period.

9.2 Batching

To avoid confusion and error in batching, consideration should be given to using the smallest practical number of different concrete mixes on any site or in any one plant. In batching concrete, the quantity of both cement and aggregate shall be determined by mass; admixture, if solid, by mass; liquid admixture may however be measured in volume or mass; water shall be weighed or measured by volume in a calibrated tank {*see also* accepted standard [6-5A(23)] }.

For large and medium project sites, the concrete shall be sourced from ready-mixed concrete plants or from captive on-site or off-site automatic batching and mixing plants. The concrete produced and supplied by ready-mixed concrete plants shall be in accordance with good practices [6-5A(24)]. In case of concrete from captive on-site or off-site automatic batching and mixing plants, similar quality control shall be followed.

9.2.1 The grading of aggregate shall be controlled by obtaining the coarse aggregate in different sizes and blending them in right proportions, the different sizes being stocked in separate stock-piles. The material should be stock-piled for several hours preferably a day before use. The grading of coarse and fine aggregate should be checked as frequently as possible, the frequency for a given job being determined by the Engineer-in-Charge to ensure that the specified grading is maintained.

9.2.2 The accuracy of the measuring equipment shall be within ± 2 percent of the quantity of cement and mineral admixtures being measured and within ± 3 percent of the quantity of aggregate, chemical admixtures and water being measured. In a batching plant, the concrete production equipment shall be calibrated initially at the time of installation or reconditioning of the equipment and subsequently at the following intervals:

a) Mechanical/knife edge systems : At least once every two months

b) Electrical/load cell systems : At least once every three months

9.2.3 All ingredients of concrete shall be used by mass only except water and chemical admixtures, which may be by volume.

9.2.4 Volume batching may be allowed only where weigh-batching is not practical and provided accurate bulk densities of materials to be actually used in concrete have earlier been established. Allowance for bulking shall be made in accordance with accepted standard [6-5A(25)]. The mass volume relationship should be checked as frequently as necessary, the frequency for the given job being determined by Engineer-in-Charge to ensure that the specified grading is maintained.

9.2.5 It is important to maintain the water-cement ratio constant at its correct value. To this end, determination of moisture contents in both fine and coarse aggregates shall be made as frequently as possible, the frequency for a given job being determined by the Engineer-in-Charge according to weather conditions. The amount of the added water shall be adjusted to compensate for any observed variations in the moisture contents. For the determination of moisture content in the aggregates, accepted standard [6-5A(25)] may be referred to. Where batching plants are used, it is recommended to determine moisture content by moisture probes fitted to the batching plants. To allow for the variation in mass of aggregate due to variation in their moisture content, suitable adjustments in the masses of aggregates shall also be made. In the absence of exact data, only in the case of nominal mixes, the amount of surface water may be estimated from the values given in Table 10.

Table 10 Surface Water Carried by Aggregate

(*Clause* 9.2.5)

Sl No.	Aggregate	Approximate Quantity of Surface Water	
		Percent by Mass	litre/m^3
(1)	(2)	(3)	(4)
i)	Very wet sand	7.5	120
ii)	Moderately wet sand	5.0	80
iii)	Moist sand	2.5	40
iv)	Moist gravel or crushed rock[1)]	1.25-2.5	20-40

[1)] Coarser the aggregate, less the water it will carry.

9.2.6 No substitutions in materials used on the work or alterations in the established proportions, except as permitted in **9.2.4** and **9.2.5** shall be made without additional tests to show that the quality and strength of concrete are satisfactory.

9.3 Mixing

Concrete shall be mixed in a mechanical mixer {(see also the accepted standard [6-5A(26)]}. It shall be ensured that stationary or central mixers and truck mixers shall comply with the performance criteria of mixing efficiency as per the accepted standard [6-5A(27)]. Mixing efficiency test shall be performed at least once in a year. The mixers shall be fitted with water measuring (metering) devices. The mixing shall be continued until there is a uniform distribution of the materials and the mass is uniform in colour and consistency. If there is segregation after unloading from the mixer, the concrete should be remixed.

9.3.1 As a guidance, the mixing time shall be at least 2 min for conventional free fall (drum) batch type concrete mixers. For other types of more efficient mixers, manufacturer's recommendations shall be followed.

9.3.2 Workability should be checked at frequent intervals {*see* accepted standard [6-5A(20)] }.

9.3.3 Dosages of retarders, plasticizers and superplasticizers shall be restricted to 0.5, 1.0 and 2.0 percent, respectively by mass of cementitious materials; however, the dosages of polycarboxylate based admixtures shall not exceed 1.0 percent. A higher value of above admixtures may be used, if agreed upon between the manufacturer and the constructor based on performance tests relating to workability, setting time and early age strength.

10 FORMWORK

10.1 General

The formwork shall be designed and constructed so as to remain sufficiently rigid during placing and compaction of concrete and shall be such as to prevent loss of slurry from the concrete. For further details regarding design, detailing, etc, reference may be made to good practice [6-5A(28)]. The tolerances on the shapes, lines and dimensions shown in the drawing shall be within the limits given below:

a) Deviation from specified dimensions of cross-section of columns and beams	: $^{+10}_{-5}$ mm
b) Deviation from dimensions of footings:	
1) Dimensions in plan	: $^{+50}_{-10}$ mm
2) Eccentricity	: 0.02 times the width of the footing in the direction of deviation but not more than 50 mm
3) Thickness	: $^{+50}_{-10}$ mm or ± 0.05 times the specified thickness, whichever is less

These tolerances apply to concrete dimensions only, and not to positioning of vertical reinforcing steel or dowels.

10.2 Cleaning and Treatment of Formwork

All rubbish, particularly, chippings, shavings and sawdust shall be removed from the interior of the forms before the concrete is placed. The face of formwork in contact with the concrete shall be cleaned and treated with form release agent. Release agents should be applied so as to provide a thin uniform coating to the forms without coating the reinforcement.

10.3 Stripping Time

10.3.1 Forms shall not be released until the concrete has achieved a strength of at least twice the stress to which the concrete may be subjected at the time of removal of formwork. The strength referred to shall be that of concrete using the same cement and aggregates and admixture, if any, with the same proportions and cured under conditions of temperature and moisture similar to those existing on the work.

10.3.2 While the above criteria of strength shall be the guiding factor for removal of formwork in normal circumstances where ambient temperature does not fall below 15°C, the following striking period may deem to satisfy the guideline given in **10.3.1**:

Type of Formwork	*Minimum Period Before Striking Formwork*	
	For Concrete Made Using OPC	For Concrete Made Using Cement Other than OPC or Using Cementitious Materials Like Fly Ash and Slag
(1)	(2)	(3)
a) Vertical formwork to columns, walls, beams	16-24 h	16-24 h
b) Soffit formwork to slabs (Props to be refixed immediately after removal of formwork)	3 days	7 days
c) Soffit formwork to beams (Props to be refixed immediately after removal of formwork)	7 days	10 days
d) Props to slabs:		
1) Spanning up to 4.5m	7 days	10 days
2) Spanning over 4.5 m	14 days	14 days
e) Props to beams and arches:		
1) Spanning up to 6 m	14 days	14 days
2) Spanning over 6 m	21 days	21 days

NOTE — Utmost care shall be taken to provide props. The props shall be provided immediately after stripping each shuttering panel and not after stripping all the panels of the entire slab.

For lower temperature, the stripping time recommended above may be suitably modified.

10.3.2.1 In case of use of cements other than OPC or in case of use of cementitious materials, *in-lieu* of the minimum period specified in **10.3.2** col 3, the stripping of formwork may be done in accordance with the provisions of **10.3.2** col 2, provided concrete cube testing is done to ensure that the following minimum strength is achieved:

3 days	:	45 percent of specified strength
7 days	:	60 percent of specified strength
14 days	:	85 percent of specified strength

10.3.3 The number of props left under, their sizes and disposition shall be such as to be able to safely carry the full dead load of the slab, beam or arch as the case may be together with any live load likely to occur during curing or further construction.

10.3.4 Where the shape of the element is such that the formwork has re-entrant angles, the formwork shall be removed as soon as possible after the concrete has set, to avoid shrinkage cracking occurring due to the restraint imposed.

11 ASSEMBLY OF REINFORCEMENT

11.1 Reinforcement shall be bent and fixed in accordance with procedure specified in good practice [6-5A(29)]. The high strength deformed steel bars should not be re-bent or straightened without the approval of Engineer-in-Charge.

Bar bending schedules shall be prepared for all reinforcement work.

11.2 All reinforcement shall be placed and maintained in the position shown in the drawings by providing proper cover blocks, spacers, supporting bars, etc.

11.2.1 Crossing bars should not be tack-welded for assembly of reinforcement unless permitted by Engineer-in-Charge.

11.3 Placing of Reinforcement

Rough handling, shock loading (prior to embedment) and the dropping of reinforcement from a height should be avoided. Reinforcement should be secured against displacement outside the specified limits.

11.3.1 *Tolerances on Placing of Reinforcement*

Unless otherwise specified by Engineer-in-Charge, the reinforcement shall be placed within the following tolerances:

a) For effective depth 200 mm or less : ± 10 mm

b) For effective depth more than 200 mm : ± 15 mm

11.3.2 *Tolerance for Cover*

Unless specified otherwise, actual concrete cover should not deviate from the required nominal cover by $^{+10}_{0}$ mm.

Nominal cover as given in **25.4.1** should be specified to all steel reinforcement including links. Spacers between the links (or the bars where no links exist) and the formwork should be of the same nominal size as the nominal cover.

Spacers, chairs and other supports detailed on drawings, together with such other supports as may be necessary, should be used to maintain the specified nominal cover to the steel reinforcement. Spacers or chairs should be placed at a maximum spacing of 1 m and closer spacing may sometimes be necessary.

Spacers, cover blocks should be of concrete of same strength or PVC.

11.4 Welded Joints or Mechanical Connections

Welded joints or mechanical connections in reinforcement may be used but in all cases of important connections, test shall be made to prove that the joints are of the full strength of bars connected. Welding of reinforcements shall be done in accordance with good practices [6-5A(30)].

11.5 Where reinforcement bars upto 12 mm for high strength deformed steel bars and up to 16 mm for mild steel bars are bent aside at construction joints and afterwards bent back into their original positions, care should be taken to ensure that at no time is the radius of the bend less than 4 bar diameters for plain mild steel or 6 bar diameters for deformed bars. Care shall also be taken when bending back bars, to ensure that the concrete around the bar is not damaged beyond the bend.

11.6 Reinforcement should be placed and tied in such a way that concrete placement be possible without segregation of the mix. Reinforcement placing should allow compaction by immersion vibrator. Within the concrete mass, different types of metal in contact should be avoided to ensure that bimetal corrosion does not take place.

12 TRANSPORTING, PLACING, COMPACTION AND CURING

12.1 Transporting and Handling

After mixing, concrete shall be transported to the formwork as rapidly as possible by methods which will prevent the segregation or loss of any of the ingredients

or ingress of foreign matter or water and maintaining the required workability.

12.1.1 During hot or cold weather, concrete shall be transported in deep containers. Other suitable methods to reduce the loss of water by evaporation in hot weather and heat loss in cold weather may also be adopted.

12.2 Placing

The concrete shall be deposited as nearly as practicable in its final position to avoid rehandling. The concrete shall be placed and compacted before initial setting of concrete commences and should not be subsequently disturbed. Methods of placing should be such as to preclude segregation. Care should be taken to avoid displacement of reinforcement or movement of formwork. As a general guidance, the maximum permissible free fall of concrete may be taken as 1.5 m.

12.3 Compaction

Concrete should be thoroughly compacted and fully worked around the reinforcement, around embedded fixtures and into corners of the formwork.

12.3.1 Concrete shall be compacted using mechanical vibrators complying with accepted standard [6-5A(31)]. Over vibration and under vibration of concrete are harmful and should be avoided. Vibration of very wet mixes should also be avoided.

Whenever vibration has to be applied externally, the design of formwork and the disposition of vibrators should receive special consideration to ensure efficient compaction and to avoid surface blemishes.

12.4 Construction Joints and Cold Joints

Joints are a common source of weakness and, therefore, it is desirable to avoid them. If this is not possible, their number shall be minimised. Concreting shall be carried out continuously up to construction joints, the position and arrangement of which shall be indicated by the designer.

Construction joints shall be placed at accessible locations to permit cleaning out of laitance, cement slurry and unsound concrete, in order to create rough/ uneven surface. It is recommended to clean out laitance and cement slurry by using wire brush on the surface of joint immediately after initial setting of concrete and to clean out the same immediately thereafter. The prepared surface should be in a clean saturated surface dry condition when fresh concrete is placed, against it.

In the case of construction joints at locations where the previous pour has been cast against shuttering the recommended method of obtaining a rough surface for the previously poured concrete is to expose the aggregate with a high pressure water jet or any other appropriate means.

Fresh concrete should be thoroughly vibrated near construction joints so that mortar from the new concrete flows between large aggregates and develop proper bond with old concrete.

Where high shear resistance is required at the construction joints, shear keys may be provided.

Sprayed curing membranes and release agents should be thoroughly removed from joint surfaces.

12.5 Curing

Curing is the process of preventing the loss of moisture from the concrete whilst maintaining a satisfactory temperature regime. The prevention of moisture loss from the concrete is particularly important if the water-cement ratio is low, if the cement has a high rate of strength development, if the concrete contains granulated blast furnace slag or pulverized fuel ash. The curing regime should also prevent the development of high temperature gradients within the concrete.

The rate of strength development at early ages of concrete made with supersulphated cement is significantly reduced at lower temperatures. Supersulphated cement concrete is seriously affected by inadequate curing and the surface has to be kept moist for at least seven days.

12.5.1 *Moist Curing*

Exposed surfaces of concrete shall be kept continuously in a damp or wet condition by ponding or by covering with a layer of sacking, canvas, hessian or similar materials and kept constantly wet for at least seven days from the date of placing concrete in case of ordinary Portland Cement and at least 10 days where mineral admixtures or blended cements are used. The period of curing shall not be less than 10 days for concrete exposed to dry and hot weather conditions. In the case of concrete where mineral admixtures or blended cements are used, it is recommended that above minimum periods may be extended to 14 days.

12.5.2 *Membrane Curing*

Approved curing compounds may be used *in-lieu* of moist curing with the permission of the Engineer-in-Charge. Such compounds shall be applied to all exposed surfaces of the concrete as soon as possible after the concrete has set. Impermeable membranes such as polyethylene sheeting covering closely the concrete surface may also be used to provide effective barrier against evaporation.

12.6 Supervision

It is exceedingly difficult and costly to alter concrete once placed. Hence, constant and strict supervision of all the items of the construction is necessary during the progress of the work, including the proportioning and mixing of the concrete. Supervision is also of extreme importance to check the reinforcement and its placing before being covered.

12.6.1 Before any important operation, such as concreting or stripping of the formwork is started, adequate notice shall be given to the construction supervisor.

13 CONCRETING UNDER SPECIAL CONDITIONS

13.1 Work in Extreme Weather Conditions

During hot or cold weather, the concreting should be done as per good practice [6-5A(32)].

13.2 Under-Water Concreting

13.2.1 When it is necessary to deposit concrete under water, the methods, equipment, materials and proportions of the mix to be used shall be submitted to and approved by the Engineer-in-Charge before the work is started.

13.2.2 Under-water concrete should have a slump recommended in **6.1**. The water-cement ratio shall not exceed 0.6 and may need to be smaller, depending on the grade of concrete or the type of chemical attack. For aggregates of 40 mm maximum particle size, the cement content shall be at least 350 kg/m^3 of concrete.

13.2.3 Coffer-dams or forms shall be sufficiently tight to ensure still water if practicable, and in any case to reduce the flow of water to less than 3 m/min through the space into which concrete is to be deposited. Coffer-dams or forms in still water shall be sufficiently tight to prevent loss of mortar through the walls. De-watering by pumping shall not be done while concrete is being placed or until 24 h thereafter.

13.2.4 Concrete cast under water should not fall freely through the water. Otherwise it may be leached and become segregated. Concrete shall be deposited continuously until it is brought to the required height. While depositing, the top surface shall be kept as nearly level as possible and the formation of seams avoided. The methods to be used for depositing concrete under water shall be one of the following:

a) *Tremie* — The concrete is placed through vertical pipes the lower end of which is always inserted sufficiently deep into the concrete which has been placed previously but has not set. The concrete emerging from the pipe pushes the material that has already been placed to the side and upwards and thus does not come into direct contact with water.

When concrete is to be deposited under water by means of tremie, the top section of the tremie shall be a hopper large enough to hold one entire batch of the mix or the entire contents the transporting bucket, if any. The tremie pipe shall not be less than 200 mm in diameter and shall be large enough to allow a free flow of concrete and strong enough to withstand the external pressure of the water in which it is suspended, even if a partial vacuum develops inside the pipe. Preferably, flanged steel pipe of adequate strength for the job should be used. A separate lifting device shall be provided for each tremie pipe with its hopper at the upper end. Unless the lower end of the pipe is equipped with an approved automatic check valve, the upper end of the pipe shall be plugged with a wadding of the gunny sacking or other approved material before delivering the concrete to the tremie pipe through the hopper, so that when the concrete is forced down from the hopper to the pipe, it will force the plug (and along with it any water in the pipe) down the pipe and out of the bottom end, thus establishing a continuous stream of concrete. It will be necessary to raise slowly the tremie in order to cause a uniform flow of the concrete, but the tremie shall not be emptied so that water enters the pipe. At all times after the placing of concrete is started and until all the concrete is placed, the lower end of the tremie pipe shall be below the top surface of the plastic concrete. This will cause the concrete to build up from below instead of flowing out over the surface, and thus avoid formation of laitance layers. If the charge in the tremie is lost while depositing, the tremie shall be raised above the concrete surface, and unless sealed by a check valve, it shall be re-plugged at the top end, as at the beginning, before refilling for depositing concrete.

b) *Direct placement with pumps* — As in the case of the tremie method, the vertical end piece of the pipe line is always inserted sufficiently deep into the previously cast concrete and should not move to the side during pumping.

c) *Drop bottom bucket* — The top of the bucket shall be covered with a canvas flap. The bottom doors shall open freely downward and outward when tripped. The bucket shall be filled completely and lowered slowly to avoid

backwash. The bottom doors shall not be opened until the bucket rests on the surface upon which the concrete is to be deposited and when discharged, shall be withdrawn slowly until well above the concrete.

d) *Bags* — Bags of at least 0.028 m^3 capacity of jute or other coarse cloth shall be filled about two-thirds full of concrete, the spare end turned under so that bag is square ended and securely tied. They shall be placed carefully in header and stretcher courses so that the whole mass is interlocked. Bags used for this purpose shall be free from deleterious materials.

e) *Grouting* — A series of round cages made from 50 mm mesh of 6 mm steel and extending over the full height to be concreted shall be prepared and laid vertically over the area to be concreted so that the distance between centres of the cages and also to the faces of the concrete shall not exceed 1 m. Stone aggregate of not less than 50 mm nor more than 200 mm size shall be deposited outside the steel cages over the full area and height to be concreted with due care to prevent displacement of the cages.

A stable 1:2 cement-sand grout with a water-cement ratio of not less than 0.6 and not more than 0.8 shall be prepared in a mechanical mixer and sent down under pressure (about 0.2 N/mm^2) through 38 to 50 mm diameter pipes terminating into steel cages, about 50 mm above the bottom of the concrete. As the grouting proceeds, the pipe shall be raised gradually up to a height of not more than 600 mm above its starting level after which it may be withdrawn and placed into the next cage for further grouting by the same procedure.

After grouting the whole area for a height of about 600 mm, the same operation shall be repeated, if necessary, for the next layer of 600 mm and so on.

The amount of grout to be sent down shall be sufficient to fill all the voids which may be either ascertained or assumed as 55 percent of the volume to be concreted.

13.2.5 To minimise the formulation of laitance, great care shall be exercised not to disturb the concrete as far as possible while it is being deposited.

14 SAMPLING AND STRENGTH OF DESIGNED CONCRETE MIX

14.1 General

Samples from fresh concrete shall be taken as per accepted standard [6-5A(20)] and cubes shall be made, cured and tested at 28 days in accordance with accepted standard [6-5A(14)].

14.1.1 In order to get a relatively quicker idea of the quality of concrete, optional tests on beams for modulus of rupture at 72 ± 2 h or at 7 days, or compressive strength tests at 7 days may be carried out in addition to 28 days compressive strength test. For this purpose the values should be arrived at based on actual testing. In all cases, the 28 days compressive strength specified in Table 2 shall alone be the criterion for acceptance or rejection of the concrete in accordance with **15**.

14.2 Frequency of Sampling

14.2.1 *Sampling Procedure*

A random sampling procedure shall be adopted to ensure that each concrete batch shall have a reasonable chance of being tested that is, the sampling should be spread over the entire period of concreting and cover all mixing units.

14.2.2 *Frequency*

The minimum frequency of sampling of concrete of each grade shall be in accordance with the following:

Quantity of Concrete in the Work m^3	*Number of Samples*
1-5	1
6-15	2
16-30	3
31-50	4
51 and above	4 plus one additional sample for each additional 50 m^3 or part thereof

NOTE — At least one sample shall be taken from each shift. Where concrete is produced at continuous production unit, such as ready-mixed concrete plant, frequency of sampling may be agreed upon mutually by the suppliers and the purchasers.

14.3 Test Specimen

Three test specimens shall be made for each sample for testing at 28 days. Additional specimens may be required for various purposes such as to determine the strength of concrete at 7 days or at the time of striking the formwork, or to determine the duration of curing, or to check the testing error. Additional specimens may also be required for testing specimens cured by accelerated methods as described in accepted standard [6-5A(33)]. The specimens shall be tested as described in accepted standard [6-5A(14)].

14.4 Test Results of Sample

The test results of the sample shall be the average of the strength of three specimens. The individual variation

should not be more than ±15 percent of the average. If more, the test results of the sample are invalid.

15 ACCEPTANCE CRITERIA

15.1 Compressive Strength

The concrete shall be deemed to comply with the strength requirements when both the following conditions are met:

a) The mean strength determined from any group of four non-overlapping consecutive test results complies with the appropriate limits in col 2 of Table 11.

b) Any individual test result complies with the appropriate limits in col 3 of Table 11.

15.2 Flexural Strength

When both the following conditions are met, the concrete complies with the specified flexural strength:

a) The mean strength determined from any group of four consecutive test results exceeds the specified characteristic strength by at least 0.3 N/mm².

b) The strength determined from any test result is not less than the specified characteristic strength less by 0.3 N/mm².

15.3 Quantity of Concrete Represented by Strength Test Results

The quantity of concrete represented by a group of four consecutive test results shall include the batches from which the first and last samples were taken together with all intervening batches.

For the individual test result requirements given in col 3 of Table 11 or in **15.2**(b), only the particular batch from which the sample was taken shall be at risk.

Where the mean rate of sampling is not specified the maximum quantity of concrete that four consecutive test results represent shall be limited to 60 m³.

15.4 If the concrete is deemed not to comply pursuant to **15.1** or **15.2** as the case may be, the structural adequacy of the parts affected shall be investigated (*see* **16**) and any consequential action as needed shall be taken.

15.5 Concrete of each grade shall be assessed separately.

15.6 Concrete is liable to be rejected if it is porous or honey-combed, its placing has been interrupted without providing a proper construction joint, the reinforcement has been displaced beyond the tolerances specified, or construction tolerances have not been met. However, the hardened concrete may be accepted after carrying out suitable remedial measures to the satisfaction of the Engineer-in-Charge.

Table 11 Characteristic Compressive Strength Compliance Requirement

(*Clauses* 15.1 *and* 15.3)

Specified Grade	Mean of the Group of 4 Non-Overlapping Consecutive Test Results N/mm² *Min*	Individual Test Results N/mm² *Min*
(1)	(2)	(3)
M 15 and above	≥ f_{ck} + 0.825 x established standard deviation (rounded off to nearest 0.5 N/mm²) or f_{ck} + 3, whichever is greater	≥ f_{ck} − 3

NOTES

1 In the absence of established value of standard deviation, the values given in Table 8 may be assumed, and attempt should be made to obtain results of 30 samples as early as possible to establish the value of standard deviation.

2 For concrete of quantity up to 30 m³ (where the number of samples to be taken is less than four as per the frequency of sampling given in **14.2.2**), the mean of test results of all such samples shall be f_{ck} + 4 N/mm², minimum and the requirement of minimum individual test results shall be f_{ck} − 2 N/mm², minimum. However, when the number of sample is only one as per **14.2.2**, the requirement shall be f_{ck} + 4 N/mm², minimum.

16 INSPECTION AND TESTING OF STRUCTURES

16.1 Inspection

To ensure that the construction complies with the design an inspection procedure should be set up covering materials, records, workmanship and construction.

16.1.1 Tests should be made on reinforcement and the constituent materials of concrete in accordance with the relevant standards. Where applicable, use should be made of suitable quality assurance schemes.

16.1.2 Care should be taken to see that,

a) design and detail are capable of being executed to a suitable standard, with due allowance for dimensional tolerances;

b) there are clear instructions on inspection standards;

c) there are clear instructions on permissible deviations;

d) elements critical to workmanship, structural performance, durability and appearance are identified; and

e) there is a system to verify that the quality is satisfactory in individual parts of the structure, especially the critical ones.

16.2 Immediately after stripping the formwork, all concrete shall be carefully inspected and any defective work or small defects either removed or made good before concrete has thoroughly hardened.

16.3 Testing

In case of doubt regarding the grade of concrete used, either due to poor workmanship or based on results of cube strength tests, compressive strength tests of concrete on the basis of **16.4** and/or load test (*see* **16.6**) may be carried out.

16.4 Core Test

16.4.1 The points from which cores are to be taken and the number of cores required shall be at the discretion of the Engineer-in-Charge and shall be representative of the whole of concrete concerned. In no case, however, shall fewer than three cores be tested.

16.4.2 Cores shall be prepared and tested as described in accepted standard [6-5A(14)].

16.4.3 Concrete in the member represented by a core test shall be considered acceptable if the average equivalent cube strength of the cores is equal to at least 85 percent of the cube strength of the grade of concrete specified for the corresponding age and no individual core has a strength less than 75 percent.

16.5 In case the core test results do not satisfy the requirements of **16.4.3** or where such tests have not been done, load test (*see* **16.6**) may be restored to.

16.6 Load Tests for Flexural Member

16.6.1 Load tests should be carried out as soon as possible after expiry of 28 days from the time of placing of concrete.

16.6.2 The structure should be subjected to a load equal to full dead load of the structure plus 1.25 times the imposed load for a period of 24 h and then the imposed load shall be removed.

NOTE — Dead load includes self weight of the structural members plus weight of finishes and walls or partitions, if any, as considered in the design.

16.6.3 The deflection due to imposed load only shall be recorded. If within 24 h of removal of the imposed load, the structure does not recover at least 75 percent of the deflection under superimposed load, the test may be repeated after a lapse of 72 h. If the recovery is less than 80 percent, the structure shall be deemed to be unacceptable.

16.6.3.1 If the maximum deflection in mm, shown during 24 h under load is less than $40\left(\frac{l^2}{D}\right)$, where l is the effective span in m; and D, the overall depth of the section, in mm, it is not necessary for the recovery to be measured and the recovery provisions of **16.6.3** shall not apply.

16.7 Members Other Than Flexural Members

Members other than flexural members should be preferably investigated by analysis.

16.8 Non-Destructive Tests

Non-destructive tests are used to obtain estimation of the properties of concrete in the structure. The methods adopted include ultrasonic pulse velocity and rebound hammer {*see* accepted standards [6-5A(34)]}, probe penetration, pullout and maturity. Non-destructive tests provide alternatives to core tests for estimating the strength of concrete in a structure, or can supplement the data obtained from a limited number of cores. These methods are based on measuring a concrete property that bears some relationship to strength. The accuracy of these methods, in part, is determined by the degree of correlation between strength and the physical quality measured by the non-destructive tests.

Any of these methods may be adopted, in which case the acceptance criteria shall be agreed upon prior to testing.

SECTION 5A (B2) SPECIAL CONCRETE

16A SELF COMPACTING CONCRETE

16A.1 General

The Self Compacting Concrete (SCC) is highly flowable, non-segregating concrete that fills uniformly and completely every corner of formwork by its own weight without the need for any compaction and encapsulates reinforcement or any other embedment. The provisions relating to its application areas, features, mix proportioning principles, and production and engineering properties are given hereunder. The provisions for concrete making materials and concrete as given in Section 5A (B1) 'Materials, Workmanship, Inspection and Testing' shall apply to SCC except where different provisions or departures have been indicated hereunder.

16A.2 Application Areas

SCC may be used in *in-situ* concrete or for precast concrete applications. It is particularly appropriate for sections with highly congested reinforcement such as, nuclear power plant structures, machine foundations, piers and abutments; and areas having restricted access

to concrete placement and compaction like shafts in hydropower structures. SCC is also suitable for the construction of tunnel lining sections and casting of concrete-filled steel tubular columns. SCC may also be used for columns and beams in normal construction with appropriate formwork design.

SCC may be produced in a batching plant on site or in ready-mixed concrete plant and transported to site by transit mixers. It may be placed either by pumping or other placement methods into horizontal or vertical forms.

16A.3 Features of Fresh Self Compacting Concrete

The features of fresh SCC are:

a) Filling ability (Flowability),
b) Passing ability,
c) Segregation resistance, and
d) Viscosity.

16A.3.1 *Filling Ability (Flowability)*

Filling ability of SCC determines its ability to flow into and fill all spaces within the formwork, under its own weight. The filling ability is tested using slump-flow test.

16A.3.1.1 *Procedure*

Slump flow test shall be carried out in accordance with accepted standard [6-5A(20)].

16A.3.1.2 *Classes of slump-flow and their application*

There are three classes of slump-flow, as follows:

a) *SF1 (slump flow 550 mm - 650 mm)* — This class of SCC is appropriate for,
   1) unreinforced or slightly reinforced concrete structures that are cast from the top with free displacement from the delivery point (such as slabs),
   2) casting by a pump injection system (such as tunnel linings), and
   3) sections those are small enough to prevent long horizontal flow (for example, piles and some deep foundations).
b) *SF2 (slump flow 650 mm - 750 mm)* is suitable for many normal applications (for example, walls, columns)
c) *SF3 (slump flow 750 mm - 850 mm)* is typically produced with a small maximum size of aggregates (less than 20 mm) and is used for vertical applications in structures having congested reinforcement, structures with complex shapes, etc. *SF*3 will often give better surface finish than *SF*2 for normal vertical applications but segregation resistance is more difficult to control.

16A.3.2 *Passing Ability (Free from Blocking at Reinforcement)*

Passing ability describes the capacity of the fresh mix to flow through confined spaces and narrow openings such as areas of congested reinforcement without segregation. If there is little or no reinforcement, there may be no need to specify passing ability as a requirement. L-box test is generally carried out to check the passing ability and the procedure shall be in accordance with accepted standard [6-5A(20)]. In this test, the height of the concrete left in the vertical section (h_1) and at the end of the horizontal section (h_2) is measured. The ratio of h_2/h_1 is calculated as the blocking ratio; which shall be between 0.8 and 1.0.

16A.3.3 *Segregation Resistance (Stability)*

Segregation resistance is the ability of fresh concrete to remain homogeneous in composition while in its fresh state. Segregation resistance is generally carried out using sieve test to check this property of fresh concrete.

16A.3.3.1 *Procedure*

Segregation resistance (sieve) test shall be carried out in accordance with accepted standard [6-5A(20)].

16A.3.3.2 *Test results*

There are two classes of segregation resistance, namely *SR*1 and *SR*2. For *SR*1 class, segregation resistance should be above 15 percent and ≤ 20 percent, and for *SR*2 it should be ≤15 percent.

*SR*1 is generally applicable for thin slabs and for vertical applications with a flow distance of less than 5 m and a confinement gap greater than 80 mm. *SR*2 is preferred in vertical applications if the flow distance is more than 5 m with a confinement gap greater than 80 mm in order to take care of segregation during flow. Segregation resistance becomes an important parameter with higher slump-flow classes and/or the lower viscosity class, or if placing conditions promote segregation. If none of these apply, it is usually not necessary to specify a segregation resistance class.

16A.3.4 *Viscosity*

Viscosity can be assessed by the V-funnel flow time. Concrete with a low viscosity will have a very quick initial flow and then stop. Concrete with a high viscosity may continue to creep forward over an extended time.

16A.3.4.1 *Procedure*

Viscosity by V-funnel test is carried out in accordance with accepted standard [6-5A(20)]. A V-shaped funnel is filled with fresh concrete and the time taken for the concrete to flow out of the funnel is measured and recorded as the V-funnel flow time.

16A.3.4.2 *Test results*

The viscosity is divided into two classes, namely *V*1 and *V*2. For *V*1 class, the time taken to pass the concrete from V-funnel shall be ≤ 8 s and for *V*2 class, it shall be above 8 s and ≤ 25 s.

*V*1 has good filling ability even with congested reinforcement. It is capable of self-levelling and generally has excellent surface finish. *V*2 class viscosity is more likely to exhibit thixotropic effects, which may be helpful in limiting the formwork pressure or improving segregation resistance. But it may cause negative effects on surface finish and sensitivity to stoppages or delays between successive lifts.

16A.4 Mix Proportioning

16A.4.1 *Mix Proportion Principles*

The principles listed below shall be followed:

a) Lower coarse aggregate content;
b) Increased paste content;
c) Low water/powder ratio (*see* Note);
d) High range superplasticizer; and
e) Viscosity modifying admixture, if required.

NOTE — Powder is the material of particle size smaller than 0.125 mm. It includes this size fraction in the cement, mineral admixtures and aggregate.

16A.4.2 *Mix Design Procedure*

For mix design procedure, reference may be made to good practice [6-5A(35)].

16A.5 Production of Self Compacting Concrete

16A.5.1 *General*

SCC is less tolerant to changes in constituent characteristics and batching variances as compared to conventional concrete. Accordingly, it is important that all aspects of the production and placing processes are carefully supervised.

The production of SCC should be carried out in plants where the equipment, operation and materials are suitably controlled under a Quality Assurance Scheme. It is important that all personnel who will be involved in the production and delivery of SCC are adequately trained including practical demonstrations.

16A.5.2 *Constituents*

SCC is more sensitive than conventional concrete to variation in the physical properties of its constituents and especially to changes in aggregate moisture content, grading and shape. So, more frequent production checks are necessary. The moisture content of aggregates should be continuously monitored and the mix adjusted to account for any variation.

Storage of constituent materials for SCC shall be same as that for materials for conventional concrete. However, as the SCC mix is more sensitive to variations, special precautions shall be taken for storage of aggregates, which should be properly stored to avoid cross-contamination between different types and sizes and protected from weather to minimise the fluctuation of surface moisture content and movement of fines. Ground stock should be stored in purpose-built partitioned bays, which should allow free drainage of excess moisture in the aggregates and rainwater.

16A.5.3 *Mixing Equipment and Trial Mixes*

SCC shall be produced with efficient forced action concrete mixers. The time necessary to achieve complete mixing of SCC may be longer than for conventional concrete due to reduced frictional forces and to fully activate the superplasticizer.

16A.5.4 *Formwork*

Formwork should be watertight and grout tight when placing SCC. The need to design the formwork for water tightness is greater than conventional formwork so as to avoid honeycombs and surface defects. The high fluid nature of SCC may lead to higher formwork pressure than conventional concrete, especially when the casting rate is high. As a result of the highly fluid nature of SCC, a high placement rate is likely and should be anticipated. Formwork designs, that accommodate the expected liquid head formwork pressure, can allow unrestricted placement rates and permit fast casting rate of the SCC. It is recommended to design the formwork for full liquid head.

16A.5.5 *Curing*

Curing is essential for all concrete, and early protection of exposed surfaces is essential to preventing rapid moisture loss that could lead to plastic shrinkage cracking. The top-surface of elements made with SCC can dry quickly because of the increased quantity of paste, the low water/fines ratio and the lack of bleed water at the surface. Initial curing should therefore commence as soon as practicable after placing and finishing in order to minimise the risk of surface crusting and shrinkage cracks caused by early age moisture evaporation.

16A.6 Engineering Properties

16A.6.1 *General*

SCC and conventional concrete of similar compressive strength have comparable properties.

16A.6.2 *Compressive Strength*

SCC with a similar water-cement ratio usually have a slightly higher strength compared to conventional concrete due to the lack of vibration giving an improved interface between the aggregate and hardened paste.

16A.6.3 *Tensile Strength*

SCC may be supplied with any specified concrete grade. For a given concrete grade, the tensile strength may be safely assumed to be the same as the one for a conventional concrete as the volume of paste (cement+ fines + water) has no significant effect on tensile strength.

16A.6.4 *Static Modulus of Elasticity*

Increasing the paste volume may decrease the modulus of elasticity, E_c. As SCC has higher paste content than conventional concrete, some difference can be expected and the E_c may be somewhat lower and should be adequately covered by the safe assumptions in design.

If SCC does have a slightly lower E_c than conventional concrete, in prestressing work, this will affect the relationship between the compressive strength and the camber due to pre-tensioning or post-tensioning. For this reason, careful control should be exercised over the strength at the time when the pre-tensioning and post-tensioning strands or wires are released.

16A.6.5 *Creep*

Due to the higher volume of cement paste, the creep coefficient for SCC may be expected to be higher than for conventional concrete of equal strength, but such differences are small and shall be covered by the safe assumptions in design.

16A.6.6 *Shrinkage*

As concrete compressive strength is related to the water-cement ratio, in SCC with a low water-cement ratio drying shrinkage reduces, but with increased cementitious content and increased water content the drying shrinkage and autogenous shrinkage can increase.

16A.6.7 *Durability*

SCC is free from shortcomings due to improper compaction and result in consistently low and uniform permeability, offering less weak points for deleterious actions of the environment.

16B HIGH PERFORMANCE CONCRETE

16B.1 General

High performance concrete is a concrete whose ingredients, proportions and production methods are specifically chosen to meet special performance and uniformity requirements. The higher performance requirements may be as follows:

Sl No.	*Higher Performance Requirements*	*Remarks/Applications*
(1)	(2)	(3)
i)	High resistance to deterioration of reinforced concrete due to carbonation	This is to help achieve longer service life. This is particularly applicable in semi-arid regions
ii)	High resistance to chloride attack/ingress	This is for longer service life of reinforced concrete exposed to severe chloride environment/coastal environment
iii)	High resistance to abrasion	This may be required in concrete structures, like parts of hydraulic structures exposed to continuous abrasive action due to silt, such as spillways/glacis; and concrete pavements exposed to heavy traffic
iv)	High resistance to impact	This may be required in structures like blast resistant structures and spillways
v)	Improvement in flexure and shear performance	This is required in bridge girders, joints of RCC framed structure, shear walls, etc
vi)	High resistance to cracking due to shrinkage (plastic and drying shrinkage)	This may be required in concrete/mortar used for repair of distressed concrete structures, etc

High strength concrete generally improves performance of all above parameters. The concrete mix proportioning for high strength concrete may be carried out in accordance with the good practice [6-5A(35)]. However, special measures are needed to further improve the specific performance requirements. As a guide, the measures given in **16B.2** may be adopted. For further details, expert literature may be referred.

16B.2 Measures for Improving Specific Performance Requirements

16B.2.1 *Resistance to Carbonation*

Resistance to carbonation of concrete is dependent mainly upon the following:

a) Type of binder, content of binder and *p*H value of concrete; and

b) Permeability of concrete.

Addition of silica fume, GGBS and fly ash improve denseness and reduce permeability, thus increasing resistance to ingress of carbon dioxide and moisture (needed for carbonation). The addition of fly ash above 35 percent tends to lower the alkalinity, and thus the resistance to carbonation. Lower water-cement ratios and higher grades of concrete can be adopted to improve performance in this case. Minimum OPC content is essential for adequate carbonation resistance for different exposure conditions.

Carbonation resistance can be checked by using accelerated carbonation tests (using 3 to 4 percent CO_2 concentrations for minimum 70 days exposure) at mix proportioning stage. For quality assurance purpose, rapid tests like rapid chloride ion penetration test (RCPT), air permeability test or electrical resistivity test may be used. Their values may be established by correlation with accelerated carbonation test values at mix proportioning stage.

16B.2.2 *Resistance to Chloride Ingress*

To improve performance of concrete exposed to chloride environment, the following two aspects need to be considered:

a) Total initial chloride content in concrete should be minimised; and
b) Permeability of concrete should be low.

Whereas chloride content of concrete can be controlled by checking chloride content of mix ingredients, the permeability of concrete can be reduced by careful selection of mix proportions and by use of supplementary cementing materials, either through use of blended cements like PPC and PSC or by direct addition of mineral admixtures, like fly ash, GGBS and silica fume. To control permeability, durability test of resistance to chloride ions shall be carried out by using chloride diffusion test by immersion or ponding method (using 3 percent NaCl exposure for 90 days) at mix proportioning stage. For quality assurance purpose rapid tests corresponding values like rapid chloride ion penetration test (RCPT) or electrical resistivity test shall be carried out. Corresponding values for these tests shall be established by developing a correlation with chloride diffusion test (by immersion/ponding) at mix proportioning stage.

16B.2.3 *Resistance to Abrasion*

To ensure good performance against abrasion, following points should be considered:

a) Use of higher grades of concrete;
b) Use of good quality strong aggregate;
c) Use of silica fume; and
d) Use of steel fibres (suited for increasing abrasion resistance in spillways/glacis, etc).

Test methods for measuring abrasion resistance are:

1) Revolving disc type test.
2) Under water abrasion resistance test using steel balls.

For further details regarding test methods and criteria, specialist literature may be referred.

16B.2.4 *Improving Performance in Flexure, Shear, Impact, Ductility and Energy Absorption*

Resistance to impact is generally increased when the strength of concrete is high and energy absorption is high. Energy absorption and toughness can be increased by use of steel fibres in concrete. Whereas addition of steel fibres, glass or carbon fibres improves flexural and shear strength also, the use of synthetic fibres like polypropylene fibres do not significantly improve the above properties. Polypropylene fibres do however reduce shrinkage cracking and are suitable for concrete/ mortar used for concrete repairs.

For checking impact resistance, falling weight impact test can be used, wherein number of blows for crack initiation in small concrete slab panel are counted.

For further details regarding test methods and criteria, specialist literature may be referred. The use of steel fibre reinforced concrete shall be further governed by **16B.2.4.1.**

16B.2.4.1 *Use of steel fibre reinforced concrete (SFRC)*

Following properties of concrete can be improved by using SFRC:

a) Ductility,
b) Toughness and energy absorption,
c) Abrasion, and
d) Flexural strength and shear strength.

Compressive and direct tensile strength gain in flexural and direct tensile strength is very significant when higher percentage of steel fibres are used which give the concrete a strain hardening effect (increase in ultimate load after initial crack). However significant improvements are achieved in strain softening zone also.

Steel fibres having aspect ratio 60 to 80 may be incorporated in concrete of different grades to improve the ductility of concrete. Fibre content varying from 0.5 to 2.5 percent volume may be incorporated in to the concrete to improve different mechanical and durability characteristics. However higher addition can cause problems in uniform mixing and placing of concrete which need to be checked at mix proportioning stage before using the mix. Corrosion of steel fibres

can also occur particularly in lower grades, so use of coated fibres and higher grades of concrete are recommended. Alternatively, a plain concrete cover of few mm can also be provided.

Design of steel fibre reinforced concrete (SFRC) for structural performance shall be in accordance with Annex A.

SECTION 5A (C) GENERAL DESIGN CONSIDERATION

17 BASES FOR DESIGN

17.1 Aim of Design

The aim of design is the achievement of an acceptable probability that structures being designed will perform satisfactorily during their intended life. With an appropriate degree of safety, they should sustain all the loads and deformations of normal construction and use and have adequate durability and adequate resistance to the effects of misuse and fire.

17.2 Methods of Design

17.2.1 Structure and structural elements shall normally be designed by Limit State Method. Account should be taken of accepted theories, experiment and experience and the need to design for durability. Calculations alone do not produce safe, serviceable and durable structures. Suitable materials, quality control, adequate detailing and good supervision are equally important.

17.2.2 Where the Limit State Method cannot be conveniently adopted, Working Stress Method (*see* Annex B) may be used.

17.2.3 *Design Based on Experimental Basis*

Designs based on experimental investigations on models or full size structure or element may be accepted if they satisfy the primary requirements of **17.1** and subject to experimental details and the analysis connected therewith being approved by the Engineer-in-Charge.

17.2.3.1 Where the design is based on experimental investigation on full size structure or element, load tests shall be carried out to ensure the following:

a) The structure shall satisfy the requirements for deflection (*see* **22.2**) and cracking (*see* **34.3.2**) when subjected to a load for 24 h equal to the characteristic load multiplied by 1.33 γ_f where γ_f shall be taken from Table 18, for the limit state of serviceability. If within 24 h of the removal of the load, the structure does not show a recovery of at least 75 percent of the maximum deflection shown during the 24 h under the load, the test loading should be repeated after a lapse of 72 h. The recovery after the second test should be at least 75 percent of the maximum deflection shown during the second test.

NOTE — If the maximum deflection in mm, shown during 24 h under load is less than $40\left(\frac{\ell^2}{D}\right)$ where ℓ is the effective span in m; and D is the overall depth of the section, in mm, it is not necessary for the recovery to be measured.

b) The structure shall have adequate strength to sustain for 24 h, a total load equal to the characteristic load multiplied by 1.33 γ_f where γ_f shall be taken from Table 18 for the limit state of collapse.

17.3 Durability, Workmanship and Materials

It is assumed that the quality of concrete, steel and other materials and of the workmanship, as verified by inspections, is adequate for safety, serviceability and durability.

17.4 Design Process

Design, including design for durability, construction and use in service should be considered as a whole. The realization of design objectives requires compliance with clearly defined standards for materials, production, workmanship and also maintenance and use of structure in service.

18 LOADS AND FORCES

18.1 General

In structural design, account shall be taken of the dead, imposed and wind loads and forces such as those caused by earthquake, and effects due to shrinkage, creep, temperature, etc, where applicable.

18.2 Dead Loads

Dead loads shall be calculated on the basis of unit weights which shall be established taking into consideration the materials specified for construction.

18.2.1 Alternatively, the dead loads may be calculated on the basis of unit weights of materials given in **2** of Part 6 'Structural Design, Section 1 Loads, Forces and Effects' of the Code. Unless more accurate calculations are warranted, the unit weights of plain concrete and reinforced concrete made with sand and gravel or crushed natural stone aggregate may be taken as 24 kN/m^3 and 25 kN/m^3, respectively.

18.3 Imposed Loads, Wind Loads and Snow Loads

Imposed loads, wind loads and snow loads shall be assumed in accordance with **3**, **4** and **6** of Part 6

'Structural Design, Section 1 Loads, Forces and Effects' of the Code.

18.4 Earthquake Forces

The earthquake forces shall be calculated in accordance with **5** of Part 6 'Structural Design, Section 1 Loads, Forces and Effects' of the Code.

18.5 Shrinkage, Creep and Temperature Effects

If the effects of shrinkage, creep and temperature are liable to affect materially the safety and serviceability of the structure, these shall be taken into account in the calculations (*see* **5.2.4**, **5.2.5** and **5.2.6** of this Subsection and **7** of Part 6 'Structural Design, Section 1 Loads, Forces and Effects' of the Code).

18.5.1 In ordinary buildings, such as low rise dwellings whose lateral dimension do not exceed 45 m, the effects due to temperature fluctuations and shrinkage and creep can be ignored in design calculations.

18.6 Other Forces and Effects

In addition, account shall be taken of the following forces and effects if they are liable to affect materially the safety and serviceability of the structure:

a) Foundation movement (*see* Part 6 'Structural Design, Section 4 Masonry' of the Code),
b) Elastic axial shortening,
c) Soil and fluid pressures (*see* **7** of Part 6 'Structural Design, Section 1 Loads, Forces and Effects' of the Code),
d) Vibration,
e) Fatigue,
f) Impact (*see* **7** of Part 6 'Structural Design, Section 1 Loads, Forces and Effects' of the Code),
g) Erection loads (*see* **3** of Part 6 'Structural Design, Section 1 Loads, Forces and Effects' of the Code), and
h) Stress concentration effect due to point load and the like.

18.7 Combination of Loads

The combination of loads shall be as given in **8** of Part 6 'Structural Design, Section 1 Loads, Forces and Effects' of the Code.

18.8 Dead Load Counteracting Other Loads and Forces

When dead load counteracts the effects due to other loads and forces in structural member or joint, special care shall be exercised by the designer to ensure adequate safety for possible stress reversal.

18.9 Design Load

Design load is the load to be taken for use in the appropriate method of design; it is the characteristic load in case of working stress method and characteristic load with appropriate partial safety factors for limit state design.

19 STABILITY OF THE STRUCTURE

19.1 Overturning

The stability of a structure as a whole against overturning shall be ensured so that the restoring moment shall be not less than the sum of 1.2 times the maximum overturning moment due to the characteristic dead load and 1.4 times the maximum overturning moment due to the characteristic imposed loads. In cases where dead load provides the restoring moment, only 0.9 times the characteristic dead load shall be considered. Restoring moment due to imposed loads shall be ignored.

19.1.1 The anchorages or counterweights provided for overhanging members (during construction and service) should be such that static equilibrium should remain, even when overturning moment is doubled.

19.2 Sliding

The structure shall have a factor against sliding of not less than 1.4 under the most adverse combination of the applied characteristic forces. In this case only 0.9 times the characteristic dead load shall be taken into account.

19.3 Probable Variation in Dead Load

To ensure stability at all times, account shall be taken of probable variations in dead load during construction, repair or other temporary measures. Wind and seismic loading shall be treated as imposed loading.

19.4 Moment Connection

In designing the framework of a building, provisions shall be made by adequate moment connections or by a system of bracings to effectively transmit all the horizontal forces to the foundations.

19.5 Lateral Sway

Under transient wind load the lateral sway at the top should not exceed $H/500$, where H is the total height of the building. For seismic loading, reference should be made to **5** of Part 6 'Structural Design, Section 1 Loads, Forces and Effects' of the Code.

20 FIRE RESISTANCE

20.1 A structure or structural element required to have fire resistance should be designed to possess an appropriate degree of resistance to flame penetration;

heat transmission and failure. The fire resistance of a structural element is expressed in terms of time in hours in accordance with 3 of Part 4 'Fire and Life Safety' of the Code. Fire resistance of concrete elements depends upon details of member size, cover to steel reinforcement detailing and type of aggregate (normal weight or light weight) used in concrete. Essential requirements of fire safety of buildings with respect to details of construction are also given in 3 of Part 4 'Fire and Life Safety' of the Code.

20.2 Minimum requirements of concrete cover and member dimensions for normal-weight aggregate concrete members so as to have the required fire resistance shall be in accordance with **25.4.3** and Fig. 1, respectively.

20.3 The reinforcement detailing should reflect the changing pattern of the structural action and ensure that both individual elements and the structure as a whole contain adequate support, ties, bonds and anchorages for the required fire resistance.

20.3.1 Additional measures such as application of fire resistant finishes, provision of fire resistant false ceilings and sacrificial steel in tensile zone, should be adopted in case the nominal cover required exceeds 40 mm for beams and 35 mm for slabs, to give protection against spalling.

20.4 Specialist literature may be referred to for determining fire resistance of the structures which have not been covered in Fig. 1 or Table 16A.

21 ANALYSIS

21.1 General

All structures may be analysed by the linear elastic theory to calculate internal actions produced by design loads. *In-lieu* of rigorous elastic analysis, a simplified analysis as given in **21.4** for frames and as given in **21.5** for continuous beams may be adopted.

21.2 Effective Span

Unless otherwise specified, the effective span of a member shall be as follows:

a) *Simply supported beam or slab* — The effective span of a member that is not built integrally with its supports shall be taken as clear span plus the effective depth of slab or beam or centre-to-centre of supports, whichever is less.

b) *Continuous beam or slab* — In the case of continuous beam or slab, if the width of the support is less than 1/12 of the clear span, the effective span shall be as given in **21.2** (a). If the supports are wider than 1/12 of the clear span or 600 mm, whichever is less, the effective span shall be taken as under :

   1) For end span with one end fixed and the other continuous or for intermediate spans, the effective span shall be the clear span between supports;

   2) For end span with one end free and the other continuous, the effective span shall be equal to the clear span plus half the effective depth of the beam or slab or the clear span plus half the width of the discontinuous support, whichever is less;

   3) In the case of spans with roller or rocker bearings, the effective span shall always be the distance between the centres of bearings.

c) *Cantilever* — The effective length of a cantilever shall be taken as its length to the face of the support plus half the effective depth except where it forms the end of a continuous beam where the length to the centre of support shall be taken.

d) *Frames* — In the analysis of a continuous frame, centre-to-centre distance shall be used.

21.3 Stiffness

21.3.1 *Relative Stiffness*

The relative stiffness of the members may be based on the moment of inertia of the section determined on the basis of any one of the following definitions:

a) *Gross section* — The cross-section of the member ignoring reinforcement;

b) *Transformed section* — The concrete cross-section plus the area of reinforcement transformed on the basis of modular ratio (*see* **B-1.3**); or

c) *Cracked section* — The area of concrete in compression plus the area of reinforcement transformed on the basis of modular ratio.

The assumptions made shall be consistent for all the members of the structure throughout any analysis.

21.3.2 For deflection calculations, appropriate values of moment of inertia as specified in Annex C should be used.

21.4 Structural Frames

The simplifying assumptions as given in **21.4.1** to **21.4.3** may be used in the analysis of frames.

21.4.1 *Arrangement of Imposed Load*

a) Consideration may be limited to combinations of,

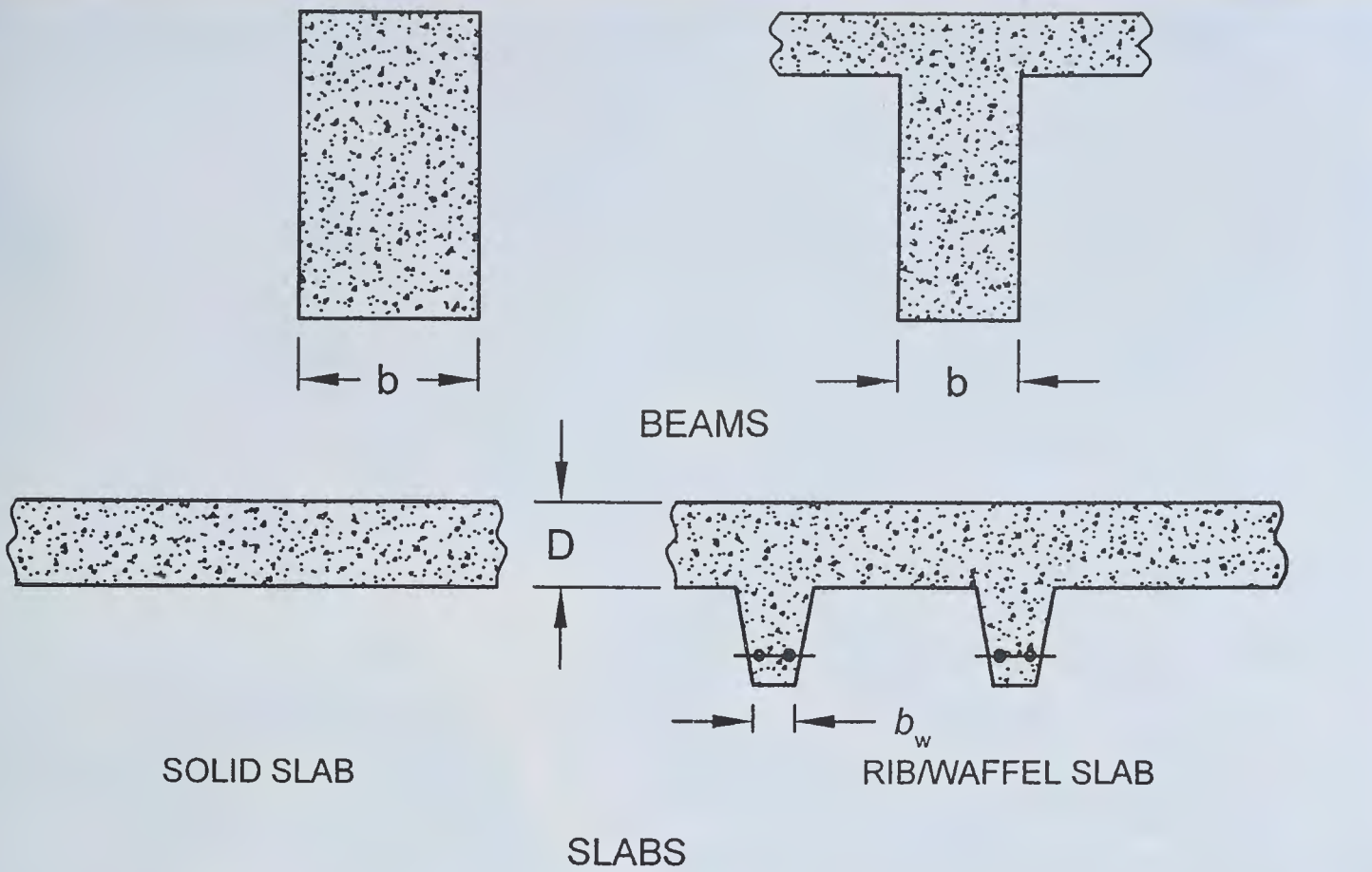

Fire Resistance h (1)	*Minimum Beam Width* *b* mm (2)	*Rib Width of Slabs* b_w mm (3)	*Minimum Thickness of Floors* *D* mm (4)	*Minimum Column Dimension (b or D)* Fully Exposed mm (5)	50% Exposed mm (6)	One Face Exposed mm (7)	*Minimum Wall Thickness* $p < 0.4\%$ mm (8)	$0.4\% \leq p \leq 1\%$ mm (9)	$p > 1\%$ mm (10)
0.5	200	125	75	150	125	100	150	100	100
1	200	125	95	200	160	120	150	120	100
1.5	200	125	110	250	200	140	175	140	100
2	200	125	125	300	200	160	—	160	100
3	240	150	150	400	300	200	—	200	150
4	280	175	170	450	350	240	—	240	180

NOTES

1 These minimum dimensions relate specifically to the covers given in Table 16A.

2 *p* is the percentage of steel reinforcement.

FIG. 1 MINIMUM DIMENSIONS OF REINFORCED CONCRETE MEMBERS FOR FIRE RESISTANCE

1) design dead load on all spans with full design imposed load on two adjacent spans; and

2) design dead load on all spans with full design imposed load on alternate spans.

b) When design imposed load does not exceed three-fourths of the design dead load, the load arrangement may be design dead load and design imposed load on all the spans.

NOTE — For beams and slabs continuous over support **21.4.1**(a) may be assumed.

21.4.2 *Substitute Frame*

For determining the moments and shears at any floor or roof level due to gravity loads, the beams at that level together with columns above and below with their far ends fixed may be considered to constitute the frame.

21.4.2.1 Where side sway consideration becomes critical due to unsymmetry in geometry or loading, rigorous analysis may be required.

21.4.3 For lateral loads, simplified methods may be used to obtain the moments and shears for structures that are symmetrical. For unsymmetrical or very tall structures, more rigorous methods should be used.

21.5 Moment and Shear Coefficients for Continuous Beams

21.5.1 Unless more exact estimates are made, for beams of uniform cross-section which support substantially uniformly distributed loads over three or more spans which do not differ by more than 15 percent of the longest, the bending moments and shear forces used in design may be obtained using the coefficients given in Table 12 and Table 13, respectively.

For moments at supports where two unequal spans meet or in case where the spans are not equally loaded, the average of the two values for the negative moment at the support may be taken for design.

Table 12 Bending Moment Coefficients

(*Clause* 21.5.1)

Sl No.	Type of Load	Span Moments		Support Moments	
		Near Middle of End Span	At Middle of Interior Span	At Support Next to the End Support	At Other Interior Supports
(1)	(2)	(3)	(4)	(5)	(6)
i)	Dead load and imposed load (fixed)	$+\frac{1}{12}$	$+\frac{1}{16}$	$-\frac{1}{10}$	$-\frac{1}{12}$
ii)	Imposed load (not fixed)	$+\frac{1}{10}$	$+\frac{1}{12}$	$-\frac{1}{9}$	$-\frac{1}{9}$

NOTE — For obtaining the bending moment, the coefficient shall be multiplied by the total design load and effective span.

Where coefficients given in Table 12 are used for calculation of bending moments, redistribution referred to in **21.7** shall not be permitted.

21.5.2 *Beams and Slabs Over Free End Supports*

Where a member is built into a masonry wall which develops only partial restraint, the member shall be designed to resist a negative moment at the face of the support of $Wl/24$ where W is the total design load and l is the effective span, or such other restraining moment as may be shown to be applicable. For such a condition shear coefficient given in Table 13 at the end support may be increased by 0.05.

Table 13 Shear Force Coefficients

(*Clauses* 21.5.1 *and* 21.5.2)

Sl No.	Type of Load	At End Support	At Support Next to the End Support		At All Other Interior Supports
			Outer Side	Inner Side	
(1)	(2)	(3)	(4)	(5)	(6)
i)	Dead load and imposed load (fixed)	0.4	0.6	0.55	0.5
ii)	Imposed load (not fixed)	0.45	0.6	0.6	0.6

NOTE — For obtaining the shear force, the coefficient shall be multiplied by the total design load.

21.6 Critical Sections for Moment and Shear

21.6.1 For monolithic construction, the moments computed at the face of the supports shall be used in the design of the members at those section. For non-monolithic construction the design of the member shall be done keeping in view **21.2**.

21.6.2 *Critical Section for Shear*

The shears computed at the face of the support shall be used in the design of the member at that section except as in **21.6.2.1**.

21.6.2.1 When the reaction in the direction of the applied shear introduces compression into the end region of the member, sections located at a distance less than d from the face of the support may be designed for the same shear as that computed at distance d (*see* Fig. 2).

NOTE — The above clauses are applicable for beams generally carrying uniformly distributed load or where the principal load is located farther than $2d$ from the face of the support.

21.7 Redistribution of Moments

Redistribution of moments may be done in accordance with **36.1.1** for limit state method and in accordance with **B-1.2** for working stress method. However, where

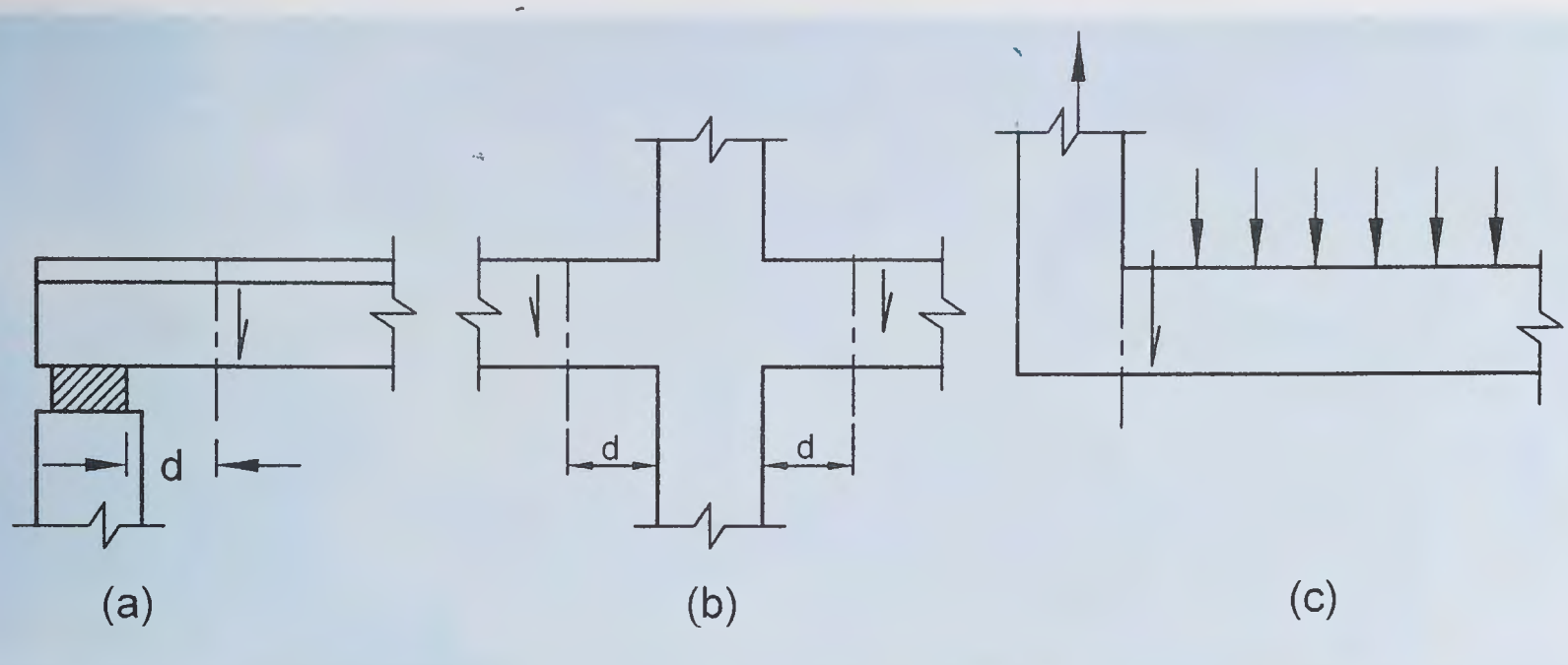

FIG. 2 TYPICAL SUPPORT CONDITIONS FOR LOCATING FACTORED SHEAR FORCE

simplified analysis using coefficients is adopted, redistribution of moments shall not be done.

22 BEAMS

22.0 Effective Depth

Effective depth of a beam is the distance between the centroid of the area of tension reinforcement and the maximum compression fibre, excluding the thickness of finishing material not placed monolithically with the member and the thickness of any concrete provided to allow for wear. This will not apply to deep beams.

22.1 T-Beams and L-Beams

22.1.1 *General*

A slab which is assumed to act as a compression flange of a T-beam or L-beam shall satisfy the following:

a) The slab shall be cast integrally with the web, or the web and the slab shall be effectively bonded together in any other manner; and

b) If the main reinforcement of the slab is parallel to the beam, transverse reinforcement shall be provided as in Fig. 3; such reinforcement shall not be less than 60 percent of the main reinforcement at mid span of the slab.

22.1.2 *Effective Width of Flange*

In the absence of more accurate determination, the effective width of flange may be taken as the following but in no case greater than the breadth of the web plus half the sum of the clear distances to the adjacent beams on either side:

a) For T-beams, $b_f = \frac{l_0}{6} + b_w + 6D_f$

b) For L-beams, $b_f = \frac{l_0}{12} + b_w + 3D_f$

c) For isolated beams, the effective flange width shall be obtained as below but in no case greater than the actual width:

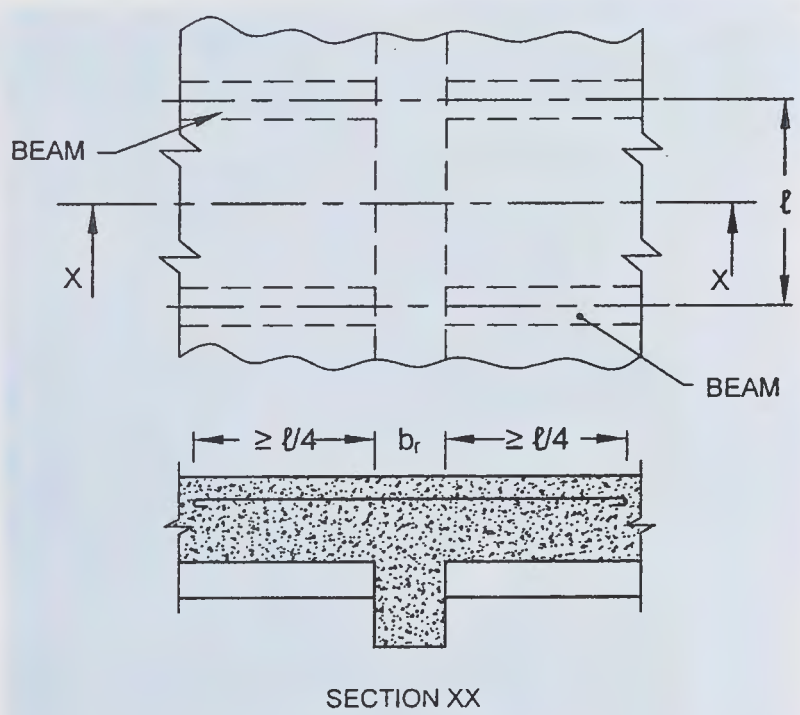

FIG. 3 TRANSVERSE REINFORCEMENT IN FLANGE OF T- BEAM WHEN MAIN REINFORCEMENT OF SLAB IS PARALLEL TO THE BEAM

T-beams, $b_f = \dfrac{l_0}{\left(\dfrac{l_0}{b}\right) + 4} + b_w$

L-beams, $b_f = \dfrac{0.5 l_0}{\left(\dfrac{l_0}{b}\right) + 4} + b_w$

where

b_f = effective width of flange,

l_0 = distance between points of zero moments in the beam,

b_w = breadth of the web,

D_f = thickness of flange, and

b = actual width of the flange.

NOTE — For continuous beams and frames, 'l_0' may be assumed as 0.7 times the effective span.

22.2 Control of Deflection

The deflection of a structure or part thereof shall not adversely affect the appearance or efficiency of the structure or finishes or partitions. The deflection shall generally be limited to the following:

a) The final deflection due to all loads including the effects of temperature, creep and shrinkage and measured from the as-cast level of the supports of floors, roofs and all other horizontal members, should not normally exceed span/250.

b) The deflection including the effects of temperature, creep and shrinkage occurring after erection of partitions and the application of finishes should not normally exceed span/350 or 20 mm, whichever is less.

22.2.1 The vertical deflection limits may generally be assumed to be satisfied provided that the span to depth ratios are not greater than the values obtained as below:

a) Basic values of span to effective depth ratios for spans up to 10 m:

Cantilever	:	7
Simply supported	:	20
Continuous	:	26

b) For spans above 10 m, the values in (a) may be multiplied by 10/span in metres, except for cantilever in which case deflection calculations should be made.

c) Depending on the area and the stress of steel for tension reinforcement, the values in (a) or (b) shall be modified by multiplying with the modification factor obtained as per Fig. 4.

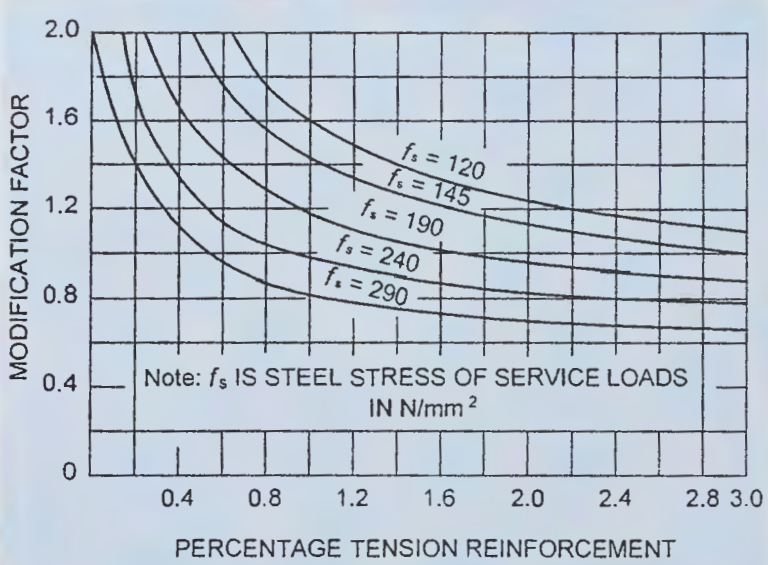

$$f_s = 0.58 f_y \frac{\text{Area of cross – section of steel required}}{\text{Area of cross – section of steel provided}}$$

FIG. 4 MODIFICATION FACTOR FOR TENSION REINFORCEMENT

d) Depending on the area of compression reinforcement, the value of span to depth ratio be further modified by multiplying with the modification factor obtained as per Fig. 5.

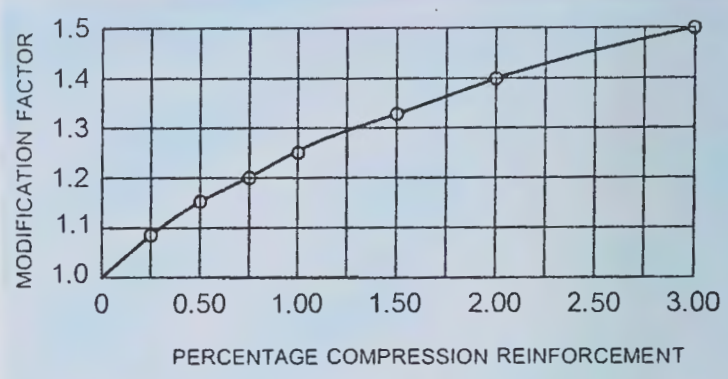

FIG. 5 MODIFICATION FACTOR FOR COMPRESSION REINFORCEMENT

e) For flanged beams, the values of (a) or (b) be modified as per Fig. 6 and the reinforcement percentage for use in Fig. 4 and Fig. 5 should be based on area of section equal to $b_f d$.

NOTE — When deflections are required to be calculated, the method given in Annex C may be used.

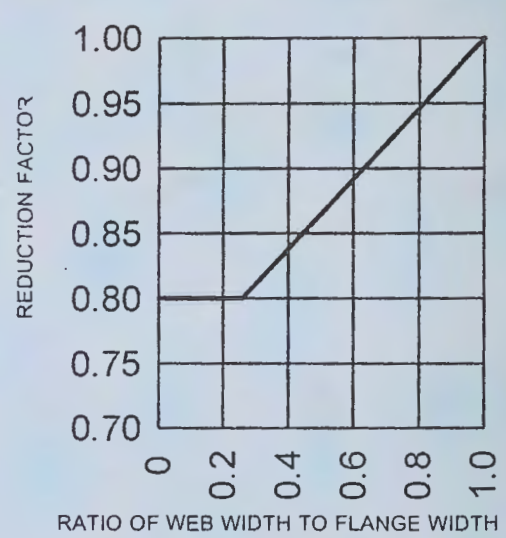

FIG. 6 REDUCTION FACTORS FOR RATIOS OF SPAN TO EFFECTIVE DEPTH FOR FLANGED BEAMS

22.3 Slenderness Limits for Beams to Ensure Lateral Stability

A simply supported or continuous beam shall be so proportioned that the clear distance between the lateral restraints does not exceed 60 b or 250 $\left(\frac{b^2}{d}\right)$, whichever is less, where d is the effective depth of the beam and b the breadth of the compression face midway between the lateral restraints.

For a cantilever, the clear distance from the free end of the cantilever to the lateral restraint shall not exceed 25 b or 100 $\left(\frac{b^2}{d}\right)$, whichever is less.

23 SOLID SLABS

23.1 General

The provisions of **22.2** for beams apply to slabs also.

NOTES

1 For slabs spanning in two directions, the shorter of the two spans should be used for calculating the span to effective depth ratios.

2 For two-way slabs of shorter spans (up to 3.5 m) with mild steel reinforcement, the span to overall depth ratios given below may generally be assumed to satisfy vertical deflection limits for loading class up to 3 kN/m².

a) Simply supported slabs : 35

b) Continuous slabs : 40

For high strength deformed bars of Grade Fe 415, the values given above should be multiplied by 0.8.

23.2 Slabs Continuous Over Supports

Slabs spanning in one direction and continuous over supports shall be designed according to the provisions applicable to continuous beams.

23.3 Slabs Monolithic with Supports

Bending moments in slabs (except flat slabs) constructed monolithically with the supports shall be calculated by taking such slabs either as continuous over supports and capable of free rotation, or as members of a continuous framework with the supports, taking into account the stiffness of such supports. If such supports are formed due to beams which justify fixity at the support of slabs, then the effects on the supporting beam, such as, the bending of the web in the transverse direction of the beam and the torsion in the longitudinal direction of the beam, wherever applicable, shall also be considered in the design of the beam.

23.3.1 For the purpose of calculation of moments in slabs in a monolithic structure, it will generally be sufficiently accurate to assume that members connected to the ends of such slabs are fixed in position and direction at the ends remote from their connections with the slabs.

23.3.2 *Slabs Carrying Concentrated Load*

23.3.2.1 If a solid slab supported on two opposite edges, carries concentrated loads the maximum bending moment caused by the concentrated loads shall be assumed to be resisted by an effective width of slab (measured parallel to the supporting edges) as follows:

a) For a single concentrated load, the effective width shall be calculated in accordance with the following equation provided that it shall not exceed the actual width of the slab:

$$b_{ef} = kx\left(1-\frac{x}{l_{ef}}\right)+a$$

where

b_{ef} = effective width of slab,

k = constant having the values given in Table 14 depending upon the ratio of the width of the slab (l') to the effective span l_{ef},

x = distance of the centroid of the concentrated load from nearer support,

l_{ef} = effective span, and

a = width of the contact area of the concentrated load from nearer support measured parallel to the supported edge.

And provided further that in case of a load near the unsupported edge of a slab, the effective width shall not exceed the above value nor half the above value plus the distance of the load from the unsupported edge.

Table 14 Values of *k* for Simply Supported and Continuous Slabs

(*Clause* 23.3.2.1)

Sl No.	l'/l_{ef}	*k* for Simply Supported Slabs	*k* for Continuous Slabs
(1)	(2)	(3)	(4)
i)	0.1	0.4	0.4
ii)	0.2	0.8	0.8
iii)	0.3	1.16	1.16
iv)	0.4	1.48	1.44
v)	0.5	1.72	1.68
vi)	0.6	1.96	1.84
vii)	0.7	2.12	1.96
viii)	0.8	2.24	2.08
ix)	0.9	2.36	2.16
x)	1.0 and above	2.48	2.24

b) For two or more concentrated loads placed in a line in the direction of the span, the bending moment per metre width of slab shall be calculated separately for each load according to its appropriate effective width of slab calculated as in (a) and added together for design calculations.

c) For two or more loads not in a line in the direction of the span, if the effective width of slab for one load does not overlap the effective width of slab for another load, both calculated as in (a) above, then the slab for each load can be designed separately. If the effective width of slab for one load overlaps the effective width of slab for an adjacent load, the overlapping portion of the slab shall be designed for the combined effect of the two loads.

d) For cantilever solid slabs, the effective width shall be calculated in accordance with the

following equation :

$$b_{ef} = 1.2a_1 + a$$

where

b_{ef} = effective width,

a_1 = distance of the concentrated load from the face of the cantilever support, and

a = width of contact area of the concentrated load measured parallel to the supporting edge.

Provided that the effective width of the cantilever slab shall not exceed one-third the length of the cantilever slab measured parallel to the fixed edge.

And provided further that when the concentrated load is placed near the extreme ends of the length of cantilever slab in the direction parallel to the fixed edge, the effective width shall not exceed the above value, nor shall it exceed half the above value plus the distance of the concentrated load from the extreme end measured in the direction parallel to the fixed edge.

23.3.2.2 For slabs other than solid slabs, the effective width shall depend on the ratio of the transverse and longitudinal flexural rigidities of the slab. Where this ratio is one, that is, where the transverse and longitudinal flexural rigidities are approximately equal, the value of effective width as found for solid slabs may be used. But as the ratio decreases, proportionately smaller value shall be taken.

23.3.2.3 Any other recognized method of analysis for cases of slabs covered by **23.3.2.1** and **23.3.2.2** and for all other cases of slabs may be used with the approval of the Engineer-in-Charge.

23.3.2.4 The critical section for checking shear shall be as given in **33.2.4.1**.

23.4 Slabs Spanning in Two Directions at Right Angles

The slabs spanning in two directions at right angles and carrying uniformly distributed load may be designed by any acceptable theory or by using coefficients given in Annex D. For determining bending moments in slabs spanning in two directions at right angles and carrying concentrated load, any accepted method approved by the Engineer-in-Charge may be adopted.

NOTE — The most commonly used elastic methods are based on Pigeaud's or Wester-guard's theory and the most commonly used limit state of collapse method is based on Johansen's yield-line theory.

23.4.1 *Restrained Slab with Unequal Conditions at Adjacent Panels*

In some cases the support moments calculated from Table 30 for adjacent panels may differ significantly. The following procedure may be adopted to adjust them:

a) Calculate the sum of the midspan moment and the average of the support moments (neglecting signs) for each panel.

b) Treat the values from Table 30 as fixed end moments.

c) According to the relative stiffness of adjacent spans, distribute the fixed end moments across the supports, giving new support moments.

d) Adjust midspan moment such that, when added to the support moments from (c) (neglecting signs), the total should be equal to that from (a).

   If the resulting support moments are significantly greater than the value from Table 30, the tension steel over the supports will need to be extended further. The procedure should be as follows:

   1) Take the span moment as parabolic between supports: its maximum value is as found from (d).
   2) Determine the points of contraflexure of the new support moments [from (c)] with the span moment [from (1)].
   3) Extend half the support tension steel at each end to at least an effective depth or 12 bar diameters beyond the nearest point of contraflexure.
   4) Extend the full area of the support tension steel at each end to half the distance from (3).

23.5 Loads on Supporting Beams

The loads on beams supporting solid slabs spanning in two directions at right angles and supporting uniformly

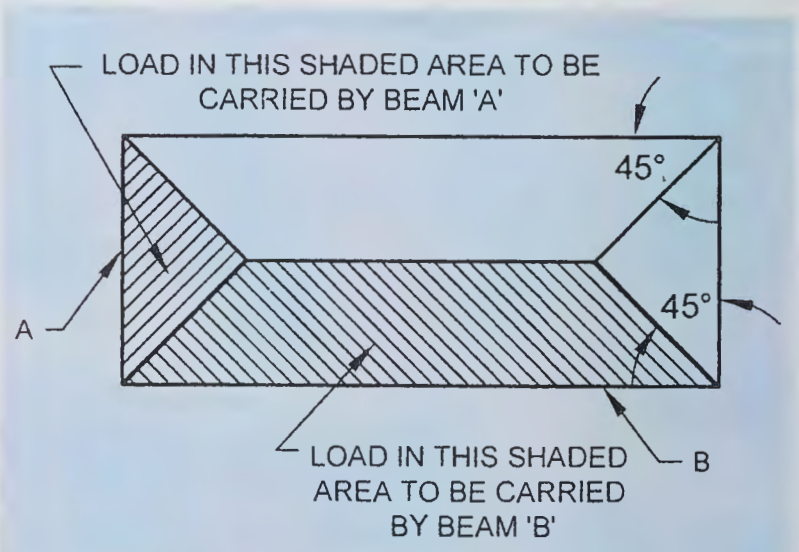

FIG. 7 LOAD CARRIED BY SUPPORTED BEAMS

distributed loads, may be assumed to be in accordance with Fig. 7.

24 COMPRESSION MEMBERS

24.1 Definitions

24.1.1 Column or strut is a compression member, the effective length of which exceeds three times the least lateral dimension.

24.1.2 *Short and Slender Compression Members*

A compression member may be considered as short when both the slenderness $\frac{l_{ex}}{D}$ and $\frac{l_{ey}}{b}$ ratios are less than 12:

where

l_{ex} = effective length in respect of the major axis,

D = depth in respect of the major axis,

l_{ey} = effective length in respect of the minor axis, and

b = width of the member.

It shall otherwise be considered as a slender compression member.

24.1.3 *Unsupported Length*

The unsupported length, l, of a compression member shall be taken as the clear distance between end restraints except that,

a) in flat slab construction, it shall be clear distance between the floor and the lower extremity of the capital, the drop panel or slab, whichever is the least.

b) in beam and slab construction, it shall be the clear distance between the floor and the underside of the shallower beam framing into the columns in each direction at the next higher floor level.

c) in columns restrained laterally by struts, it shall be the clear distance between consecutive struts in each vertical plane, provided that to be an adequate support, two such struts shall meet the columns at approximately the same level and the angle between vertical planes through the struts shall not vary more than 30° from a right angle. Such struts shall be of adequate dimensions and shall have sufficient anchorage to restrain the member against lateral deflection.

d) in columns restrained laterally by struts or beams, with brackets used at the junction, it shall be the clear distance between the floor and the lower edge of the bracket, provided that the bracket width equals that of the beam strut and is at least half that of the column.

24.2 Effective Length of Compression Members

In the absence of more exact analysis, the effective length l_{ef} of columns may be obtained as described in Annex E.

24.3 Slenderness Limits for Columns

24.3.1 The unsupported length between end restraints shall not exceed 60 times the least lateral dimension of a column.

24.3.2 If, in any given plane, one end of a column is unrestrained, its unsupported length, l shall not exceed

$$100\left(\frac{b^2}{D}\right)$$

where

b = width of that cross-section, and

D = depth of the cross-section measured in the plane under consideration.

24.4 Minimum Eccentricity

All columns shall be designed for minimum eccentricity, equal to the unsupported length of column/500 plus lateral dimensions/30, subject to a minimum of 20 mm. Where bi-axial bending is considered, it is sufficient to ensure that eccentricity exceeds the minimum about one axis at a time.

25 REQUIREMENTS GOVERNING REINFORCEMENT AND DETAILING

25.1 General

Reinforcing steel of same type and grade shall be used as main reinforcement in a structural member. However, simultaneous use of two different types or grades of steel for main and secondary reinforcement respectively is permissible.

25.1.1 Bars may be arranged singly, or in pairs in contact, or in groups of three or four bars bundled in contact. Bundled bars shall be enclosed within stirrups or ties. Bundled bars shall be tied together to ensure the bars remaining together. Bars larger than 32 mm diameter shall not be bundled, except in columns. Congestion of reinforcement should be avoided during detailing. Various methods such as choosing the diameter and grade of steel carefully and bundling of reinforcement, if required, are available.

25.1.2 The recommendations for detailing for earthquake-resistant construction given in Annex F should be taken into consideration, where applicable (*see also* **8** of Part 6 'Structural Design, Section 4 Masonry' of the Code).

25.2 Development of Stress in Reinforcement

The calculated tension or compression in any bar at any section shall be developed on each side of the section by an appropriate development length or end anchorage or by a combination thereof.

25.2.1 *Development Length of Bars*

The development length L_d is given by:

$$L_d = \frac{\phi\sigma_s}{4\tau_{bd}}$$

where

ϕ = nominal diameter of the bar,

σ_s = stress in bar at the section considered at design load, and

τ_{bd} = design bond stress given in **25.2.1.1**.

NOTES

1 The development length includes anchorage values of hooks in tension reinforcement.

2 For bars of sections other than circular, the development length should be sufficient to develop the stress in the bar by bond.

3 For plain cement concrete of M 15 grade with nominal reinforcement, the design bond stress may be taken as 1.0 N/mm².

25.2.1.1 Design bond stress in limit state method for plain bars in tension shall be as below:

Grade of Concrete	M 20	M 25	M 30	M 35	M 40 and above
Design Bond Stress, τ_{bd}, N/mm²	1.2	1.4	1.5	1.7	1.9

For deformed bars conforming to accepted standard [6-5A(36)] these values shall be increased by 60 percent.

For fusion bonded epoxy coated deformed bars conforming to accepted standard [6-5A(37)], design bond stress values shall be taken as 80 percent of the values given in the above table.

For bars in compression, the values of bond stress for bars in tension shall be increased by 25 percent.

The values of bond stress in working stress design, are given in **B-2.1**.

25.2.1.2 *Bars bundled in contact*

The development length of each bar of bundled bars shall be that for the individual bar, increased by 10 percent for two bars in contact, 20 percent for three bars in contact and 33 percent for four bars in contact.

25.2.2 *Anchoring Reinforcing Bars*

25.2.2.1 *Anchoring bars in tension*

a) Deformed bars may be used without end anchorages provided development length requirement is satisfied. Hooks should normally be provided for plain bars in tension.

b) *Bends and hooks* — Bends and hooks shall conform to good practice [6-5A(29)] :

   1) *Bends* — The anchorage value of bend shall be taken as 4 times the diameter of the bar for each 45° bend subject to a maximum of 16 times the diameter of the bar.

   2) *Hooks* — The anchorage value of a standard *U*-type hook shall be equal to 16 times the diameter of the bar.

25.2.2.2 *Anchoring bars in compression*

The anchorage length of straight bar in compression shall be equal to the development length of bars in compression as specified in **25.2.1**. The projected length of hooks, bends and straight lengths beyond bends, if provided for a bar in compression, shall only be considered for development length.

25.2.2.3 *Mechanical devices for anchorage*

Any mechanical or other device capable of developing the strength of the bar without damage to concrete may be used as anchorage with the approval of the Engineer-in-Charge.

25.2.2.4 *Anchoring shear reinforcement*

a) *Inclined bars* — The development length shall be as for bars in tension; this length shall be measured as under:

   1) In tension zone, from the end of the sloping or inclined portion of the bar, and

   2) In the compression zone, from the mid depth of the beam.

b) *Stirrups* — Notwithstanding any of the provisions of this standard, in case of secondary reinforcement, such as stirrups and transverse ties, complete development lengths and anchorage shall be deemed to have been provided when the bar is bent through an angle of at least 90° round a bar of at least its own diameter and is continued beyond the end of the curve for a length of at least eight diameters, or when the bar is bent through an angle of 135° and is continued beyond the end of the curve for a length of at least six bar diameters or when the bar is bent through an angle of 180° and is continued beyond the end of the curve for a length of at least four bar diameters.

25.2.2.5 *Bearing stresses at bends*

The bearing stress in concrete for bends and hooks described in good practice [6-5A(29)] need not be checked. The bearing stress inside a bend in any other bend shall be calculated as given below:

$$\text{Bearing stress} = \frac{F_{bt}}{r\phi}$$

where

F_{bt} = tensile force due to design loads in a bar or group or bars,

r = internal radius of the bend, and

ϕ = size of the bar or, in bundle, the size of bar of equivalent area.

For limit state method of design, this stress shall not exceed $\frac{1.5 f_{ck}}{1+2\phi/a}$ where f_{ck} is the characteristic cube strength of concrete and a, for a particular bar or group of bars in contact shall be taken as the centre-to-centre distance between bars or groups of bars perpendicular to the plane of the bend; for a bar or group of bars adjacent to the face of the member a shall be taken as the cover plus size of bar (ϕ). For working stress method of design, the bearing stress shall not exceed $\frac{f_{ck}}{1+2\phi/a}$.

25.2.2.6 If a change in direction of tension or compression reinforcement induces a resultant force acting outward tending to split the concrete, such force should be taken up by additional links or stirrups. Bent tension bar at a re-entrant angle should be avoided.

25.2.3 *Curtailment of Tension Reinforcement in Flexural Members*

25.2.3.1 For curtailment, reinforcement shall extend beyond the point at which it is no longer required to resist flexure for a distance equal to the effective depth of the member or 12 times the bar diameter, whichever is greater except at simple support or end of cantilever. In addition **25.2.3.2** to **25.2.3.5** shall also be satisfied.

NOTE — A point at which reinforcement is no longer required to resist flexure is where the resistance moment of the section, considering only the continuing bars, is equal to the design moment.

25.2.3.2 Flexural reinforcement shall not be terminated in a tension zone unless any one of the following conditions is satisfied:

a) The shear at the cut-off point does not exceed two-thirds that permitted, including the shear strength of web reinforcement provided.

b) Stirrup area in excess of that required for shear and torsion is provided along each terminated bar over a distance from the cut-off point equal to three-fourths the effective depth of the member. The excess stirrup area shall be not less than $0.4\, bs/f_y$, where b is the breadth of beam, s is the spacing and f_y is the characteristic strength of reinforcement in N/mm². The resulting spacing shall not exceed $d/8\beta_b$ where β_b is the ratio of the area of bars cut-off to the total area of bars at the section, and d is the effective depth.

c) For 36 mm and smaller bars, the continuing bars provide double the area required for flexure at the cut-off point and the shear does not exceed three-fourths that permitted.

25.2.3.3 *Positive moment reinforcement*

a) At least one-third the positive moment reinforcement in simple members and one-fourth the positive moment reinforcement in continuous members shall extend along the same face of the member into the support, to a length equal to $L_d/3$.

b) When a flexural member is part of the primary lateral load resisting system, the positive reinforcement required to be extended into the support as described in (a) shall be anchored to develop its design stress in tension at the face of the support.

c) At simple supports and at points of inflection, positive moment tension reinforcement shall be limited to a diameter such that L_d computed for f_d by **25.2.1** does not exceed:

$$\frac{M_1}{V} + L_0$$

where

M_1 = moment of resistance of the section assuming all reinforcement at the section to be stressed to f_d;

f_d = $0.87 f_y$ in the case of limit state design and the permissible stress σ_{st} in the case of working stress design;

V = shear force at the section due to design loads;

L_0 = sum of the anchorage beyond the centre of the support and the equivalent anchorage value of any hook or mechanical anchorage at simple support; and at a point of inflection, L_0 is limited to the effective depth of the members or 12ϕ, whichever is greater; and

ϕ = diameter of bar.

The value of M_1/V in the above expression may be increased by 30 percent when the ends of the reinforcement are confined by a compressive reaction.

25.2.3.4 *Negative moment reinforcement*

At least one-third of the total reinforcement provided for negative moment at the support shall extend beyond the point of inflection for a distance not less than the effective depth of the member of 12ϕ or one-sixteenth of the clear span, whichever is greater.

25.2.3.5 *Curtailment of bundled bars*

Bars in a bundle shall terminate at different points spaced apart by not less than 40 times the bar diameter except for bundles stopping at a support.

25.2.4 *Special Members*

Adequate end anchorage shall be provided for tension reinforcement in flexural members where reinforcement stress is not directly proportional to moment, such as sloped, stepped, or tapered footings; brackets; deep beams; and members in which the tension reinforcement is not parallel to the compression face.

25.2.5 *Reinforcement Splicing*

Where splices are provided in the reinforcing bars, they shall as far as possible be away from the sections of maximum stress and be staggered. It is recommended that splices in flexural members should not be at sections where the bending moment is more than 50 percent of the moment of resistance; and not more than half the bars shall be spliced at a section.

Where more than one-half of the bars are spliced at a section or where splices are made at points of maximum stress, special precautions shall be taken such as increasing the length of lap and/or using spirals or closely-spaced stirrups around the length of the splice.

25.2.5.1 *Lap splices*

a) Lap splices shall not be used for bars larger than 32 mm. Bars larger than 32 mm shall be welded (*see* **11.4**) or mechanically spliced.

b) Lap splices shall be considered as staggered if the centre-to-centre distance of the splices is not less than 1.3 times the lap length calculated as described in (c).

c) Lap length including anchorage value of hooks for bars in flexural tension shall be L_d (*see* **25.2.1**) or 30 ϕ, whichever is greater. The straight length of the lap shall not be less than 15 ϕ or 200 mm. The following provisions shall also apply:

   Where lap occurs for a tension bar located at,

   1) top of a section as cast and the minimum cover is less than twice the diameter of the lapped bar, the lap length shall be increased by a factor of 1.4.

   2) corner of a section and the minimum cover to either face is less than twice the diameter of the lapped bar or where the clear distance between adjacent laps is less than 75 mm or 6 times the diameter of lapped bar, whichever is greater, the lap length should be increased by a factor of 1.4.

   Where both condition (1) and (2) apply, the lap length should be increased by a factor of 2.0.

   NOTE — Splices in tension members shall be enclosed in spirals made of bars not less than 6 mm diameter with pitch not more than 100 mm.

d) The lap length in compression shall be equal to the development length in compression, calculated as described in **25.2.1**, but not less than 24 ϕ.

e) When bars of two different diameters are to be spliced, the lap length shall be calculated on the basis of diameter of the smaller bar.

f) When splicing of welded wire fabric is to be carried out, lap splices of wires shall be made so that overlap measured between the extreme cross wires shall be not less than the spacing of cross wires plus 100 mm.

g) In case of bundled bars, lapped splices of bundled bars shall be made by splicing one bar at a time; such individual splices within a bundle shall be staggered.

Reinforcement couplers for mechanical splices of bars for concrete reinforcement, used, shall be in accordance with accepted standard [6-5A(38)].

25.2.5.2 *Strength of welds*

The following values may be used where the strength of the weld has been proved by tests to be at least as great as that of the parent bar.

a) *Splices in compression* — For welded splices and mechanical connection, 100 percent of the design strength of joined bars.

b) *Splices in tension*

1) 80 percent of the design strength of welded bars (100 percent if welding is strictly supervised and if at any cross-section of the member not more than 20 percent of the tensile reinforcement is welded).

2) 100 percent of design strength of mechanical connection.

25.2.5.3 *End-bearing splices*

End-bearing splices shall be used only for bars in

compression. The ends of the bars shall be square cut and concentric bearing ensured by suitable devices.

25.3 Spacing of Reinforcement

25.3.1 For the purpose of this clause, the diameter of a round bar shall be its nominal diameter, and in the case of bars which are not round or in the case of deformed bars or crimped bars, the diameter shall be taken as the diameter of a circle giving an equivalent effective area. Where spacing limitations and minimum concrete cover (*see* **25.4**) are based on bar diameter, a group of bars bundled in contact shall be treated as a single bar of diameter derived from the total equivalent area.

25.3.2 *Minimum Distance Between Individual Bars*

The following shall apply for spacing of bars:

a) The horizontal distance between two parallel main reinforcing bars shall usually be not less than the greatest of the following :
   1) The diameter of the bar if the diameters are equal.
   2) The diameter of the larger bar if the diameters are unequal, and
   3) 5 mm more than the nominal maximum size of coarse aggregate.

   NOTE — This does not preclude the use of larger size of aggregates beyond the congested reinforcement in the same member; the size of aggregates may be reduced around congested reinforcement to comply with this provision.

b) Greater horizontal distance than the minimum specified in (a) should be provided, wherever possible. However, when needle vibrators are used the horizontal distance between bars of a group may be reduced to two-thirds the nominal maximum size of the coarse aggregate, provided that sufficient space is left between groups of bars to enable the vibrator to be immersed.

c) Where there are two or more rows of bars, the bars shall be vertically in line and the minimum vertical distance between the bars shall be 15 mm, two-thirds the nominal maximum size of aggregate or the maximum size of bars, whichever is greater.

25.3.3 *Maximum Distance Between Bars in Tension*

Unless the calculation of crack widths shows that a greater spacing is acceptable, the following rules shall be applied to flexural members in normal internal or external conditions of exposure:

a) *Beams* — The horizontal distance between parallel reinforcement bars, or groups, near the tension face of a beam shall not be greater than the value given in Table 15 depending on the amount of redistribution carried out in analysis and the characteristic strength of the reinforcement.

b) *Slabs*
   1) The horizontal distance between parallel main reinforcement bars shall not be more than three times the effective depth of solid slab or 300 mm, whichever is smaller.
   2) The horizontal distance between parallel reinforcement bars provided against shrinkage and temperature shall not be more than five times the effective depth of a solid slab or 300 mm, whichever is smaller.

Table 15 Clear Distance Between Bars

(*Clause* 25.3.3)

Sl No.	f_y	Percentage Redistribution to or from Section Considered				
		–30	–15	0	+15	+ 30
		Clear Distance Between Bars				
	N/mm²	mm	mm	mm	mm	mm
(1)	(2)	(3)	(4)	(5)	(6)	(7)
i)	250	215	260	300	300	300
ii)	415	125	155	180	210	235
iii)	500	105	130	150	175	195

NOTE — The spacings given in table are not applicable to members subjected to particularly aggressive environments unless in the calculation of the moment of resistance f_y has been limited to 300 N/mm² in limit state design and σ_{st} limited to 165 N/mm² in working stress design.

25.4 Nominal Cover to Reinforcement

25.4.1 *Nominal Cover*

Nominal cover is the design depth of concrete cover to all steel reinforcements, including links. It is the dimension used in design and indicated in the drawings. It shall be not less than the diameter of the bar.

25.4.2 *Nominal Cover to Meet Durability Requirement*

Minimum values for the nominal cover of normal-weight aggregate concrete which should be provided to all reinforcement, including links depending on the condition of exposure described in **7.2.2** shall be as given in Table 16.

25.4.2.1 However, for a longitudinal reinforcing bar in a column nominal cover shall in any case not be less than 40 mm, or less than the diameter of such bar. In the case of columns of minimum dimension of 200 mm or under, whose reinforcing bars do not exceed 12 mm, a nominal cover of 25 mm may be used.

Table 16 Nominal Cover to Meet Durability Requirements

(*Clause* 25.4.2)

Sl No.	Exposure	Nominal Concrete Cover not Less Than mm
(1)	(2)	(3)
i)	Mild	20
ii)	Moderate	30
iii)	Severe	45
iv)	Very severe	50
v)	Extreme	75

NOTES

1 For main reinforcement up to 12 mm diameter bar for mild exposure the nominal cover may be reduced by 5 mm.

2 Unless specified otherwise, actual concrete cover should not deviate from the required nominal cover by $^{+10}_{-0}$ mm.

3 For exposure condition 'severe' and 'very severe', reduction of 5 mm may be made, where concrete grade is M 35 and above.

25.4.2.2 For footings minimum cover shall be 50 mm.

25.4.3 *Nominal Cover to Meet Specified Period of Fire Resistance*

Minimum values of nominal cover of normal-weight aggregate concrete to be provided to all reinforcement including links to meet specified period of fire resistance shall be given in Table 16A.

25.5 Requirements of Reinforcement for Structural Members

25.5.1 *Beams*

25.5.1.1 *Tension reinforcement*

a) *Minimum reinforcement* – The minimum area of tension reinforcement shall be not less than that given by the following:

$$\frac{A_s}{bd} = \frac{0.85}{f_y}$$

where

A_s = minimum area of tension reinforcement;

b = breadth of beam or the breadth of the web of T-beam;

d = effective depth, and

f_y = characteristic strength of reinforcement, in N/mm^2.

b) *Maximum reinforcement* – The maximum area of tension reinforcement shall not exceed 0.04 *bD*.

where

D = overall depth of beam or slab or diameter of column; dimension of a rectangular column in the direction under consideration.

NOTE — The use of 4 percent reinforcement may involve practical difficulty in placing and compacting concrete; hence lower percentage is recommended.

25.5.1.2 *Compression reinforcement*

The maximum area of compression reinforcement shall not exceed 0.04 *bD*. Compression reinforcement in beams shall be enclosed by stirrups for effective lateral restraint. The arrangement of stirrups shall be as specified in **25.5.3.2**.

NOTE — The use of 4 percent reinforcement may involve practical difficulty in placing and compacting concrete; hence lower percentage is recommended.

25.5.1.3 *Side face reinforcement*

Where the depth of the web in a beam exceeds 750 mm, side face reinforcement shall be provided along the two faces. The total area of such reinforcement shall be not

Table 16A Nominal Cover to Meet Specified Period of Fire Resistance

(*Clauses* 20.4, 25.4.3 *and* Fig. 1)

Sl No.	Fire Resistance	Nominal Cover						
		Beams		Slabs		Ribs		Columns
		Simply Supported	Continuous	Simply Supported	Continuous	Simply Supported	Continuous	
	h	mm	mm	mm	mm	mm	mm	mm
(1)	(2)	(3)	(4)	(5)	(6)	(7)	(8)	[redacted]
i)	0.5	20	20	20	20	20	20	40
ii)	1	20	20	20	20	20	20	40
iii)	1.5	20	20	25	20	35	20	40
iv)	2	40	30	35	25	45	35	40
v)	3	60	40	45	35	55	45	40
vi)	4	70	50	55	45	65	55	40

NOTES

1 The nominal covers given relate specifically to the minimum member dimensions given in Fig. 1.

2 Cases that lie below the bold line require attention to the additional measures necessary to reduce the risks of spalling (*see* **20.3.1**).

less than 0.1 percent of the web area and shall be distributed equally on two faces at a spacing not exceeding 300 mm or web thickness, whichever is less.

25.5.1.4 *Transverse reinforcement in beams for shear and torsion*

The transverse reinforcement in beams shall be taken around the outer-most tension and compression bars. In T-beams and I-beams, such reinforcement shall pass around longitudinal bars located close to the outer face of the flange.

25.5.1.5 *Maximum spacing of shear reinforcement*

The maximum spacing of shear reinforcement measured along the axis of the member shall not exceed 0.75 d for vertical stirrups and d for inclined stirrups at 45°, where d is the effective depth of the section under consideration. In no case shall the spacing exceed 300 mm.

25.5.1.6 *Minimum shear reinforcement*

Minimum shear reinforcement in the form of stirrups shall be provided such that,

$$\frac{A_{sv}}{bs_v} \geq \frac{0.4}{0.87 f_y}$$

where

A_{sv} = total cross-sectional area of stirrups legs effective in shear,

s_v = stirrup spacing along the length of the member,

b = breadth of the beam or breadth of the web of flanged beam, and

f_y = characteristic strength of the stirrup reinforcement, in N/mm^2, which shall not be taken greater than 415 N/mm^2.

Where the maximum shear stress calculated is less than half the permissible value and in members of minor structural importance such as lintels, this provision need not be complied with.

25.5.1.7 *Distribution of torsion reinforcement*

When a member is designed for torsion (*see* **40** or **B-6**) torsion reinforcement shall be provided as below:

a) The transverse reinforcement for torsion shall be rectangular closed stirrups placed perpendicular to the axis of the member. The spacing of the stirrups shall not exceed the least of x_1, $\frac{x_1 + y_1}{4}$, and 300 mm, where x_1 and y_1 are respectively the short and long dimensions of the stirrup.

b) Longitudinal reinforcement shall be placed as close as is practicable to the corners of the cross-section and in all cases, there shall be at least one longitudinal bar in each corner of the ties. When the cross-sectional dimension of the member exceeds 450 mm, additional longitudinal bars shall be provided to satisfy the requirements of minimum reinforcement and spacing given in **25.5.1.3**.

25.5.1.8 Reinforcement in flanges of T-beams and L-beams shall satisfy the requirements in **22.1.1**(b). Where flanges are in tension, a part of the main tension reinforcement shall be distributed over the effective flange width or a width equal to one-tenth of the span, whichever is smaller. If the effective flange width exceeds one-tenth of the span, nominal longitudinal reinforcement shall be provided in the outer portions of the flange.

25.5.2 *Slabs*

The rules given in **25.5.2.1** and **25.5.2.2** shall apply to slabs in addition to those given in the appropriate clauses.

25.5.2.1 *Minimum reinforcement*

The mild steel reinforcement in either direction in slabs shall not be less than 0.15 percent of the total cross-sectional area. However, this value can be reduced to 0.12 percent when high strength deformed bars or welded wire fabric are used.

25.5.2.2 *Maximum diameter*

The diameter of reinforcing bars shall not exceed one-eighth of the total thickness of the slab.

25.5.3 *Columns*

25.5.3.1 *Longitudinal reinforcement*

a) The cross-sectional area of longitudinal reinforcement, shall be not less than 0.8 percent nor more than 6 percent of the gross cross-sectional area of the column.

NOTE — The use of 6 percent reinforcement may involve practical difficulties in placing and compacting of concrete; hence lower percentage is recommended. Where bars from the columns below have to be lapped with those in the column under consideration, the percentage of steel shall usually not exceed 4 percent.

b) In any column that has a larger cross-sectional area than that required to support the load, the minimum percentage of steel shall be based upon the area of concrete required to resist the direct stress and not upon the actual area.

c) The minimum number of longitudinal bars provided in a column shall be four in rectangular columns and six in circular columns.

d) The bars shall not be less than 12 mm in diameter.

e) A reinforced concrete column having helical reinforcement shall have at least six bars of longitudinal reinforcement within the helical reinforcement.

f) In a helically reinforced column, the longitudinal bars shall be in contact with the helical reinforcement and equidistant around its inner circumference.

g) Spacing of longitudinal bars measured along the periphery of the column shall not exceed 300 mm.

h) In case of pedestals in which the longitudinal reinforcement is not taken in account in strength calculations, nominal longitudinal reinforcement not less than 0.15 percent of the cross-sectional area shall be provided.

NOTE — Pedestal is a compression member, the effective length of which does not exceed three times the least lateral dimension.

25.5.3.2 *Transverse reinforcement*

a) *General* — A reinforced concrete compression member shall have transverse or helical reinforcement so disposed that every longitudinal bar nearest to the compression face has effective lateral support against buckling subject to provisions in (b). The effective lateral support is given by transverse reinforcement either in the form of circular rings capable of taking up circumferential tension or by polygonal links (lateral ties) with internal angles not exceeding 135°. The ends of the transverse reinforcement shall be properly anchored [*see* **25.2.2.4**(b)].

b) *Arrangement of transverse reinforcement*

1) If the longitudinal bars are not spaced more than 75 mm on either side, transverse reinforcement need only to go round corner and alternate bars for the purpose of providing effective lateral supports (*see* Fig. 8).

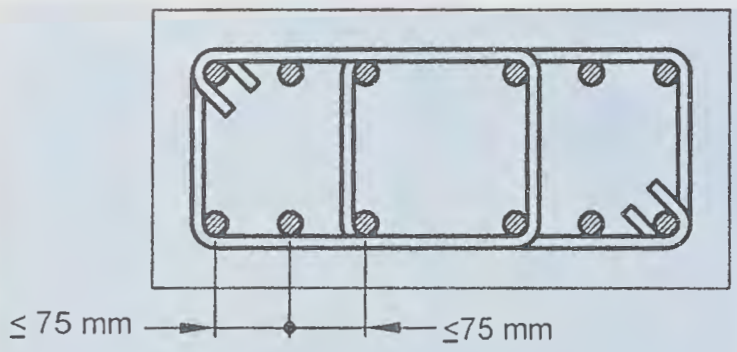

FIG. 8

2) If the longitudinal bars spaced at a distance of not exceeding 48 times the diameter of the tie are effectively tied in two directions, additional longitudinal bars in between these bars need to be tied in one dircction by open ties (*see* Fig. 9).

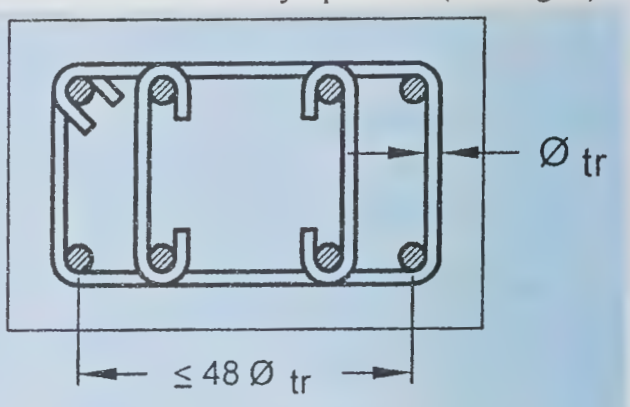

FIG. 9

3) Where the longitudinal reinforcing bars in a compression member are placed in more than one row, effective lateral support to the longitudinal bars in the inner rows may be assumed to have been provided, if

i) transverse reinforcement is provided for the outer-most row in accordance with **25.5.3.2**; and

ii) no bar of the inner row is closer to thc nearest compression face than three times the diameter of the largest bar in the inner row (*see* Fig. 10).

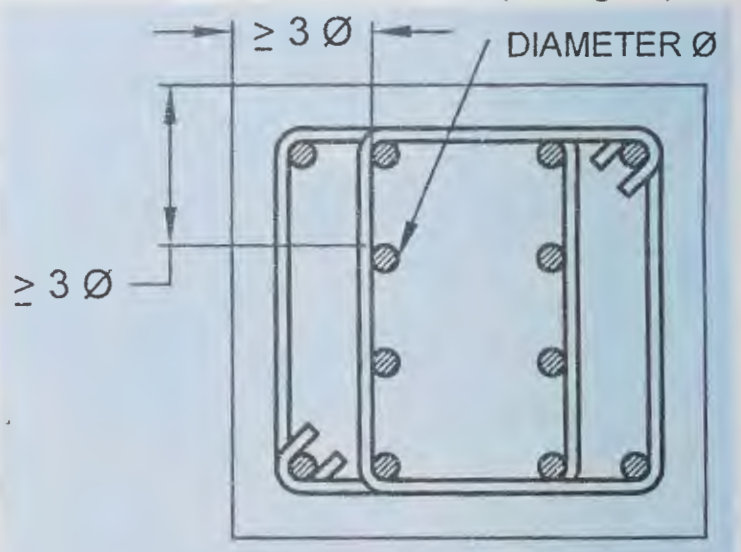

FIG. 10

4) Where the longitudinal bars in a compression member are grouped (not in contact) and each group adequately tied with transverse reinforcement in accordance with **25.5.3.2**, the transverse reinforcement for the compression member as a whole may be provided on the assumption that each group is a single longitudinal bar for purpose of determining the pitch and diameter of the transverse reinforcement in accordance with **25.5.3.2**. The diameter of such

transverse reinforcement need not, however, exceed 20 mm (*see* Fig. 11).

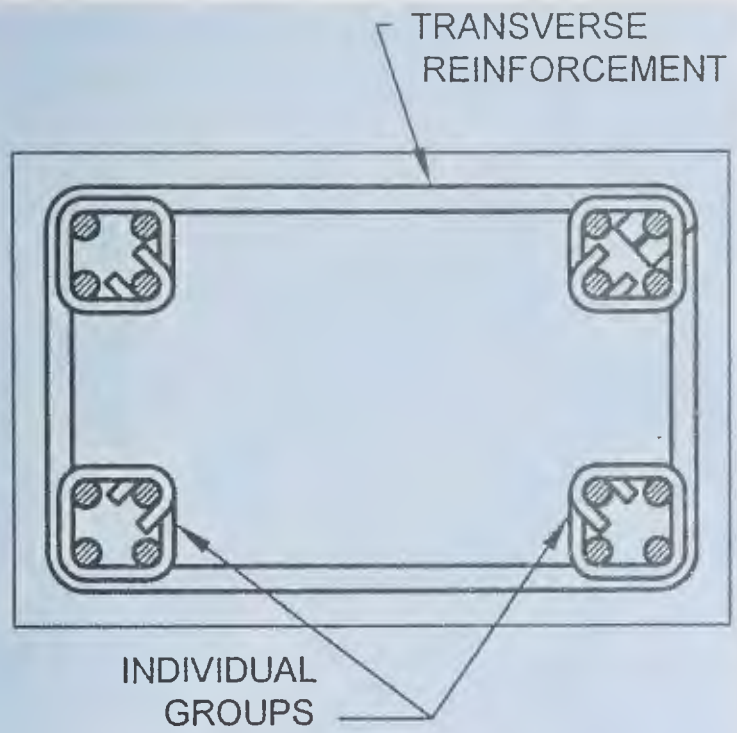

FIG. 11

c) *Pitch and diameter of lateral ties*

1) *Pitch* — The pitch of transverse reinforcement shall be not more than the least of the following distances:

i) The least lateral dimension of the compression members;

ii) Sixteen times the smallest diameter of the longitudinal reinforcement bar to be tied; and

iii) 300 mm.

2) *Diameter* — The diameter of the polygonal links or lateral ties shall be not less than one-fourth of the diameter of the largest longitudinal bar, and in no case less than 6 mm.

d) *Helical reinforcement*

1) *Pitch* — Helical reinforcement shall be of regular formation with the turns of the helix spaced evenly and its ends shall be anchored properly by providing one and a half extra turns of the spiral bar. Where an increased load on the column on the strength of the helical reinforcement is allowed for, the pitch of helical turns shall be not more than 75 mm, nor more than one-sixth of the core diameter of the column, nor less than 25 mm, nor less than three times the diameter of the steel bar forming the helix. In other cases, the requirements of **25.5.3.2** shall be complied with.

2) The diameter of the helical reinforcement shall be in accordance with **25.5.3.2** (c) (2).

25.5.3.3 In columns where longitudinal bars are offset at a splice, the slope of the inclined portion of the bar with the axis of the column shall not exceed 1 in 6, and the portions of the bar above and below the offset shall be parallel to the axis of the column. Adequate horizontal support at the offset bends shall be treated as a matter of design, and shall be provided by metal ties, spirals, or parts of the floor construction. Metal ties or spirals so designed shall be placed near (not more than eight-bar diameters from) the point of bend. The horizontal thrust to be resisted shall be assumed as one and half times the horizontal components of the nominal stress in the inclined portion of the bar. Offset bars shall be bent before they are placed in the forms. Where column faces are offset 75 mm or more, splices of vertical bars adjacent to the offset face shall be made by separate dowels overlapped as specified in **25.2.5.1**.

26 EXPANSION JOINTS

26.1 Structures in which marked changes in plan dimensions take place abruptly shall be provided with expansion joints at the section where such changes occur. Expansion joints shall be so provided that the necessary movement occurs with a minimum resistance at the joint. The structures adjacent to the joint should preferably be supported on separate columns or walls but not necessarily on separate foundations. Reinforcement shall not extend across an expansion joint and the break between the sections shall be complete.

26.2 The details as to the length of a structure where expansion joints have to be provided can be determined after taking into consideration various factors, such as temperature, exposure to weather, the time and season of the laying of the concrete, etc. Normally structures exceeding 45 m in length are designed with one or more expansion joints. However, in view of the large number of factors involved in deciding the location, spacing and nature of expansion joints, the provision of expansion joint in reinforced cement concrete structures should be left to the discretion of the designer. Good practice [6-5A(39)] gives the design considerations, which need to be examined and provided for.

SECTION 5A (D) SPECIAL DESIGN REQUIREMENTS FOR STRUCTURAL MEMBERS AND SYSTEMS

27 CONCRETE CORBELS

27.1 General

A corbel is a short cantilever projection which supports a load bearing member and where,

a) the distance a_v between the line of the reaction to the supported load and the root of the corbel

is less than d (the effective depth of the root of the corbel); and

b) the depth at the outer edge of the contact area of the supported load is not less than one-half of the depth at the root of the corbel.

The depth of the corbel at the face of the support is determined in accordance with **39.5.1**.

27.2 Design

27.2.1 *Simplifying Assumptions*

The concrete and reinforcement may be assumed to act as elements of a simple strut-and-tie system, with the following guidelines:

a) The magnitude of the resistance provided to horizontal force should be not less than one-half of the design vertical load on the corbel (*see also* **27.2.4**).

b) Compatibility of strains between the strut-and-tie at the corbel root should be ensured.

It should be noted that the horizontal link requirement described in **27.2.3** will ensure satisfactory serviceability performance.

27.2.2 *Reinforcement Anchorage*

At the front face of the corbel, the reinforcement should be anchored either by:

a) *Welding to a transverse bar of equal strength* — In this case the bearing area of the load should stop short of the face of the support by a distance equal to the cover of the tie reinforcement, or

b) *Bending back the bars to form a loop* — In this case the bearing area of the load should not project beyond the straight portion of the bars forming the main tension reinforcement.

27.2.3 *Shear Reinforcement*

Shear reinforcement should be provided in the form of horizontal links distributed in the upper two-third of the effective depth of root of the corbel; this reinforcement should be not less than one-half of the area of the main tension reinforcement and should be adequately anchored.

27.2.4 *Resistance to Applied Horizontal Force*

Additional reinforcement connected to the supported member should be provided to transmit this force in its entirety.

28 DEEP BEAMS

28.1 General

a) A beam shall be deemed to be a deep beam when the ratio of effective span to overall depth, $\frac{l}{D}$ is less than,

1) 2.0 for a simply supported beam; and

2) 2.5 for a continuous beam.

b) A deep beam complying with the requirements of **28.2** and **28.3** shall be deemed to satisfy the provisions for shear.

28.2 Lever Arm

The lever arm z for a deep beam shall be determined as below:

a) *For simply supported beams* :

$$z = 0.2\,(l + 2\,D) \qquad \text{when } 1 \le \frac{l}{D} \le 2$$

or

$$z = 0.6l \qquad \text{when } \frac{l}{D} < 1$$

b) *For continuous beams* :

$$z = 0.2(l + 1.5D) \qquad \text{when } 1 \le \frac{l}{D} \le 2.5$$

or

$$z = 0.5l \qquad \text{when } \frac{l}{D} < 1$$

where l is the effective span taken as centre-to-centre distance between supports or 1.15 times the clear span, whichever is smaller, and D is the overall depth.

28.3 Reinforcement

28.3.1 *Positive Reinforcement*

The tensile reinforcement required to resist positive bending moment in any span of a deep beam shall,

a) extend without curtailment between supports;

b) be embedded beyond the face of each support, so that at the face of the support it shall have a development length not less than $0.8\,L_d$; where L_d is the development length (*see* **25.2.1**), for the design stress in the reinforcement; and

c) be placed within a zone of depth equal to $(0.25\,D - 0.05\,l)$ adjacent to the tension face of the beam where D is the overall depth and l is the effective span.

28.3.2 *Negative Reinforcement*

a) *Termination of reinforcement* — For tensile reinforcement required to resist negative bending moment over a support of a deep beam:

1) It shall be permissible to terminate not more than half of the reinforcement at a distance of 0.5 D from the face of the support, where D is as defined in **29.2**; and

2) The remainder shall extend over the full span.

b) *Distribution* – When ratio of clear span to overall depth is in the range 1.0 to 2.5, tensile reinforcement over a support of a deep beam shall be placed in two zones comprising,

1) a zone of depth 0.2 D, adjacent to the tension face, which shall contain a proportion of the tension steel given by:

$$0.5\left(\frac{l}{D}-0.5\right)$$

where

l = clear span, and

D = overall depth.

2) a zone measuring 0.3 D on either side of the mid-depth of the beam, which shall contain the remainder of the tension steel, evenly distributed.

For span to depth ratios less than unity, the steel shall be evenly distributed over a depth of 0.8 D measured from the tension face.

28.3.3 *Vertical Reinforcement*

If forces are applied to a deep beam in such a way that hanging action is required, bars or suspension stirrups shall be provided to carry all the forces concerned.

28.3.4 *Side Face Reinforcement*

Side face reinforcement shall comply with requirements of minimum reinforcement of wall (*see* **31.5**).

29 RIBBED, HOLLOW BLOCK OR VOIDED SLAB

29.1 General

This covers the slabs constructed in one of the ways described below:

a) As a series of concrete ribs with topping cast on forms which may be removed after the concrete has set;

b) As a series of concrete ribs between precast blocks which remain part of the completed structure; the top of the ribs may be connected by a topping of concrete of the same strength as that used in the ribs; and

c) With a continuous top and bottom face but containing voids of rectangular, oval or other shape.

29.2 Analysis of Structure

The moments and forces due to design loads on continuous slabs may be obtained by the methods given in Section 5A (C) for solid slabs. Alternatively, the slabs may be designed as a series of simply supported spans provided they are not exposed to weather or corrosive conditions; wide cracks may develop at the supports and the engineer shall satisfy himself that these will not impair finishes or lead to corrosion of the reinforcement.

29.3 Shear

Where hollow blocks are used, for the purpose of calculating shear stress, the rib width may be increased to take account of the wall thickness of the block on one side of the rib; with narrow precast units, the width of the jointing mortar or concrete may be included.

29.4 Deflection

The recommendations for deflection in respect of solid slabs may be applied to ribbed, hollow block or voided construction. The span to effective depth ratios given in **22.2** for a flanged beam are applicable but when calculating the final reduction factor for web width, the rib width for hollow block slabs may be assumed to include the walls of the blocks on both sides of the rib. For voided slabs and slabs constructed of box or I-section units, an effective rib width shall be calculated assuming all material below the upper flange of the unit to be concentrated in a rectangular rib having the same cross-sectional area and depth.

29.5 Size and Position of Ribs

In-situ ribs shall be not less than 65 mm wide. They shall be spaced at centres not greater than 1.5 m apart and their depth, excluding any topping, shall be not more than four times their width. Generally ribs shall be formed along each edge parallel to the span of one way slabs. When the edge is built into a wall or rests on a beam, a rib at least as wide as the bearing shall be formed along the edge.

29.6 Hollow Blocks and Formers

Blocks and formers may be of any suitable material. Hollow clay tiles for the filler type shall conform to accepted standard [6-5A(40)]. When required to contribute to the structural strength of a slab they shall,

a) be made of concrete or burnt clay; and

b) have a crushing strength of at least 14 N/mm^2 measured on the net section when axially

loaded in the direction of compressive stress in the slab.

29.7 Arrangement of Reinforcement

The recommendations given in **25.3** regarding maximum distance between bars apply to areas of solid concrete in this form of construction. The curtailment, anchorage and cover to reinforcement shall be as described below:

a) At least 50 percent of the total main reinforcement shall be carried through at the bottom on to the bearing and anchored in accordance with **25.2.3.3**.

b) Where a slab, which is continuous over supports, has been designed as simply supported, reinforcement shall be provided over the support to control cracking. This reinforcement shall have a cross-sectional area of not less than one-quarter that required in the middle of the adjoining spans and shall extend at least one-tenth of the clear span into adjoining spans.

c) In slabs with permanent blocks, the side cover to the reinforcement shall not be less than 10 mm. In all other cases, cover shall be provided according to **25.4**.

29.8 Precast Joists and Hollow Filler Blocks

The construction with precast joists and hollow filler blocks of concrete or clay shall conform to good practice [6-5A(41)].

30 FLAT SLABS

30.1 General

The term flat slab means a reinforced concrete slab with or without drops, supported generally without beams, by columns with or without flared column heads (*see* Fig. 12). A flat slab may be solid slab or may have recesses formed on the soffit so that the soffit comprises a series of ribs in two directions. The recesses may be formed by removable or permanent filler blocks.

30.1.1 For the purpose of this clause, the following definitions shall apply:

a) *Column strip* — Column strip means a design strip having a width of 0.25 l_2, but not greater than 0.25 l_1 on each side of the column centre-line, where l_1 is the span in the direction moments are being determined, measured centre-to-centre of supports and l_2 is the span transverse to l_1, measured centre-to-centre of supports.

b) *Middle strip* — Middle strip means a design strip bounded on each of its opposite sides by the column strip.

c) *Panel* — Panel means that part of a slab bounded on each of its four sides by the centre-line of a column or centre-lines of adjacent spans.

30.2 Proportioning

30.2.1 *Thickness of Flat Slab*

The thickness of the flat slab shall be generally controlled by considerations of span to effective depth ratios given in **22.2**.

For slabs with drops conforming to **30.2.2**, span to effective depth ratios given in **22.2** shall be applied directly; otherwise the span to effective depth ratios

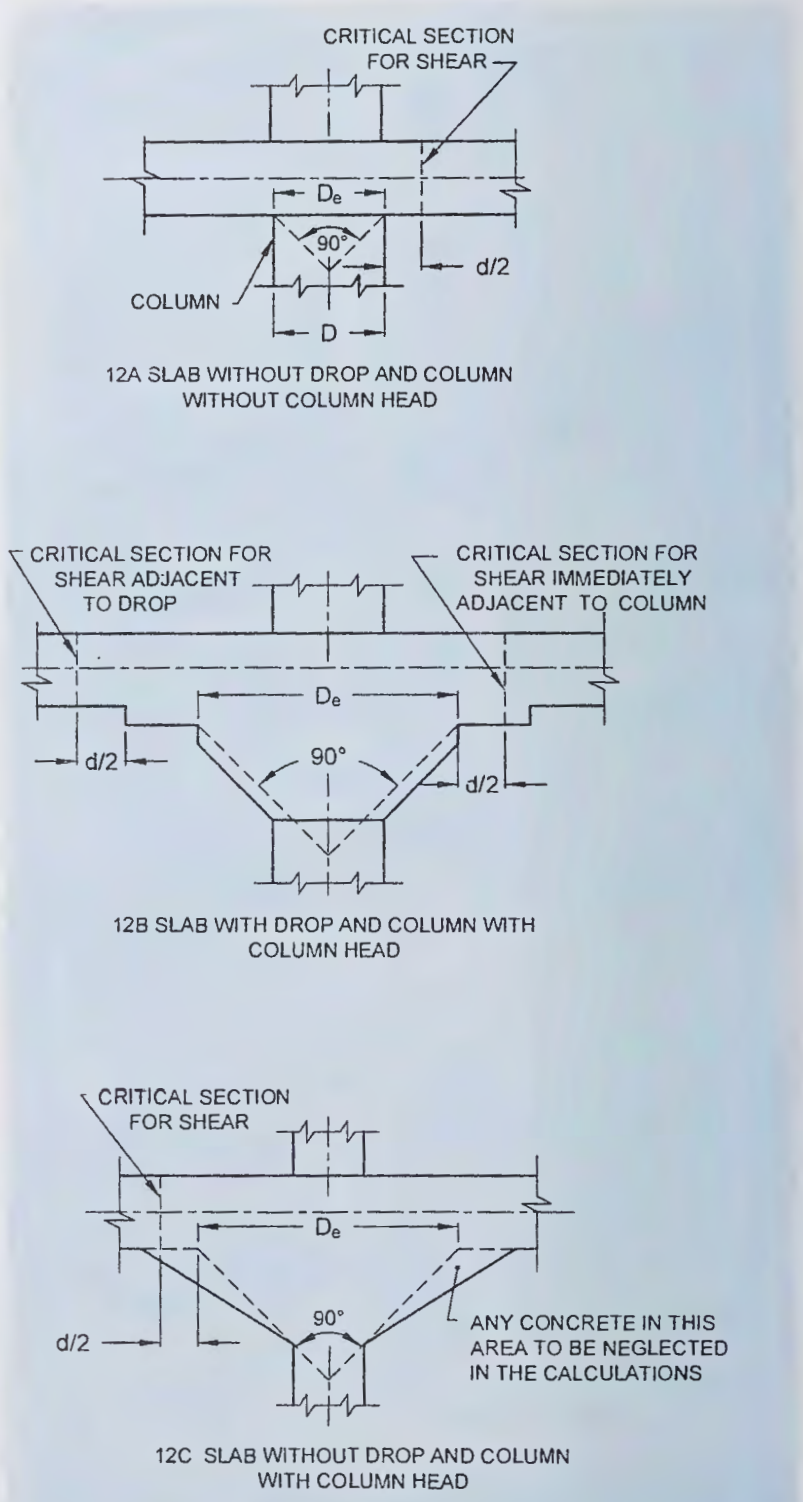

NOTE — D_e is the diameter of column or column head to be considered for design and d is effective depth of slab or drop as appropriate.

FIG. 12 CRITICAL SECTIONS FOR SHEAR IN FLAT SLABS

obtained in accordance with provisions in **22.2** shall be multiplied by 0.9. For this purpose, the longer span shall be considered. The minimum thickness of slab shall be 125 mm.

30.2.2 *Drop*

The drops when provided shall be rectangular in plan, and have a length in each direction not less than one-third of the panel length in that direction. For exterior panels, the width of drops at right angles to the non-continuous edge and measured from the centre-line of the columns shall be equal to one-half the width of drop for interior panels.

30.2.3 *Column Heads*

Where column heads are provided, that portion of a column head which lies within the largest right circular cone or pyramid that has a vertex angle of 90° and can be included entirely within the outlines of the column and the column head, shall be considered for design purposes (*see* Fig. 12).

30.3 Determination of Bending Moment

30.3.1 *Methods of Analysis and Design*

It shall be permissible to design the slab system by one of the following methods:

a) The direct design method as specified in **30.4**, and

b) The equivalent frame method as specified in **30.5**.

In each case the applicable limitations given in **30.4** and **30.5** shall be met.

30.3.2 *Bending Moments in Panels with Marginal Beams or Walls*

Where the slab is supported by a marginal beam with a depth greater than 1.5 times the thickness of the slab, or by a wall, then,

a) the total load to be carried by the beam or wall shall comprise those loads directly on the wall or beam plus a uniformly distributed load equal to one-quarter of the total load on the slab; and

b) the bending moments on the half-column strip adjacent to the beam or wall shall be one-quarter of the bending moments for the first interior column strip.

30.3.3 *Transfer of Bending Moments to Columns*

When unbalanced gravity load, wind, earthquake, or other lateral loads cause transfer of bending moment between slab and column, the flexural stresses shall be investigated using a fraction, α of the moment given by:

$$\alpha = \frac{1}{1+\frac{2}{3}\sqrt{a_1/a_2}}$$

where

a_1 = overall dimension of the critical section for shear in the direction in which moment acts, and

a_2 = overall dimension of the critical section for shear transverse to the direction in which moment acts.

A slab width between lines that are one and one-half slab or drop panel thickness; 1.5 *D*, on each side of the column or capital may be considered effective, *D* being the size of the column.

Concentration of reinforcement over column head by closer spacing or additional reinforcement may be used to resist the moment on this section.

30.4 Direct Design Method

30.4.1 *Limitations*

Slab system designed by the direct design method shall fulfill the following conditions:

a) There shall be minimum of three continuous spans in each direction,

b) The panels shall be rectangular, and the ratio of the longer span to the shorter span within a panel shall not be greater than 2.0,

c) It shall be permissible to offset columns to a maximum of 10 percent of the span in the direction of the offset notwithstanding the provision in (b),

d) The successive span lengths in each direction shall not differ by more than one-third of the longer span. The end spans may be shorter but not longer than the interior spans, and

e) The design live load shall not exceed three times the design dead load.

30.4.2 *Total Design Moment for a Span*

30.4.2.1 In the direct design method, the total design moment for a span shall be determined for a strip bounded laterally by the centre-line of the panel on each side of the centre-line of the supports.

30.4.2.2 The absolute sum of the positive and average negative bending moments in each direction shall be taken as :

$$M_o = \frac{Wl_n}{8}$$

where

M_o = total moment;

W = design load on an area $l_2\, l_n$;

l_n = clear span extending from face to face of columns, capitals, brackets or walls, but not less than 0.65 l_1;

l_1 = length of span in the direction of M_o; and

l_2 = length of span transverse to l_1.

30.4.2.3 Circular supports shall be treated as square supports having the same area.

30.4.2.4 When the transverse span of the panels on either side of the centre-line of supports varies, l_2 shall be taken as the average of the transverse spans.

30.4.2.5 When the span adjacent and parallel to an edge is being considered, the distance from the edge to the centre-line of the panel shall be substituted for l_2 in **30.4.2.2**.

30.4.3 *Negative and Positive Design Moments*

30.4.3.1 The negative design moment shall be located at the face of rectangular supports, circular supports being treated as square supports having the same area.

30.4.3.2 In an interior span, the total design moment M_o shall be distributed in the following proportions:

a) Negative design moment : 0.65

b) Positive design moment : 0.35

30.4.3.3 In an end span, the total design moment M_o shall be distributed in the following proportions:

a) *Interior negative design moment*:

$$0.75 - \frac{0.10}{1 + \frac{1}{\alpha_c}}$$

b) *Positive design moment*:

$$0.63 - \frac{0.28}{1 + \frac{1}{\alpha_c}}$$

c) *Exterior negative design moment*:

$$\frac{0.65}{1 + \frac{1}{\alpha_c}}$$

α_c is the ratio of flexural stiffness of the exterior columns to the flexural stiffness of the slab at a joint taken in the direction moments are being determined and is given by:

$$\alpha_c = \frac{\sum K_c}{K_s}$$

where

K_c = sum of the flexural stiffness of the columns meeting at the joint; and

K_s = flexural stiffness of the slab, expressed as moment per unit rotation.

30.4.3.4 It shall be permissible to modify these design moments by up to 10 percent, so long as the total design moment, M_o for the panel in the direction considered is not less than that required by **30.4.2.2**.

30.4.3.5 The negative moment section shall be designed to resist the larger of the two interior negative design moments determined for the spans framing into a common support unless an analysis is made to distribute the unbalanced moment in accordance with the stiffness of the adjoining parts.

30.4.4 *Distribution of Bending Moments Across the Panel Width*

Bending moments at critical cross-section shall be distributed to the column strips and middle strips as specified in **30.5.5** as applicable.

30.4.5 *Moments in Columns*

30.4.5.1 Columns built integrally with the slab system shall be designed to resist moments arising from loads on the slab system.

30.4.5.2 At an interior support, the supporting members above and below the slab shall be designed to resist the moment M given by the following equation, in direct proportion to their stiffnesses unless a general analysis is made:

$$M = 0.08\left(\frac{(w_d + 0.5w_l)l_2 l_n^2 - w_d' l_2' l_n'^2}{1 + \frac{1}{\alpha_c}}\right)$$

where

w_d, w_l = design dead and live loads respectively, per unit area;

l_2 = length of span transverse to the direction of M;

l_n = length of the clear span in the direction of M, measured face to face of supports;

$\alpha_c = \frac{\sum K_c}{\sum K_s}$ where K_c and K_s are as defined in **30.4.3.3**; and

w_d', l_2' and l_n' refer to the shorter span.

30.4.6 *Effects of Pattern Loading*

In the direct design method, when the ratio of live load to dead load exceeds 0.5,

a) the sum of the flexural stiffness of the columns above and below the slab, $\sum K_c$, shall be such that α_c is not less than the appropriate minimum value $\alpha_{c\,min}$ specified in Table 17; or

b) if the sum of the flexural stiffnesses of the columns, $\sum K_c$, does not satisfy (a), the positive design moments for the panel shall be multiplied by the coefficient β_s given by the following equation :

$$\beta_s = 1 + \left[\frac{2 - \frac{w_d}{w_l}}{4 + \frac{w_d}{w_l}}\right]\left(1 - \frac{\alpha_c}{\alpha_{c\,min}}\right)$$

α_c is the ratio of flexural stiffness of the columns above and below the slab to the flexural stiffness of the slabs at a joint taken in the direction moments are being determined and is given by:

$$\alpha_c = \frac{\sum K_c}{\sum K_s}$$

where K_c and K_s are flexural stiffnesses of column and slab respectively.

Table 17 Minimum Permissible Values of α_c

(*Clause* 30.4.6)

Sl No.	Imposed Load/ Dead Load	Ratio $\frac{l_1}{l_2}$	Value of $\alpha_{c\,min}$
(1)	(2)	(3)	(4)
i)	0.5	0.5 to 2.0	0
ii)	1.0	0.5	0.6
iii)	1.0	0.8	0.7
iv)	1.0	1.0	0.7
v)	1.0	1.25	0.8
vi)	1.0	2.0	1.2
vii)	2.0	0.5	1.3
viii)	2.0	0.8	1.5
ix)	2.0	1.0	1.6
x)	2.0	1.25	1.9
xi)	2.0	2.0	4.9
xii)	3.0	0.5	1.8
xiii)	3.0	0.8	2.0
xiv)	3.0	1.0	2.3
xv)	3.0	1.25	2.8
xvi)	3.0	2.0	13.0

30.5 Equivalent Frame Method

30.5.1 *Assumptions*

The bending moments and shear forces may be determined by an analysis of the structure as a continuous frame and the following assumptions may be made:

a) The structure shall be considered to be made up of equivalent frames on column lines taken longitudinally and transversely through the building. Each frame consists of a row of equivalent columns or supports, bounded laterally by the centre-line of the panel on each side of the centre-line of the columns or supports. Frames adjacent and parallel to an edge shall be bounded by the edge and the centre-line of the adjacent panel.

b) Each such frame may be analysed in its entirety, or, for vertical loading, each floor thereof and the roof may be analysed separately with its columns being assumed fixed at their remote ends. Where slabs are thus analysed separately, it may be assumed in determining the bending moment at a given support that the slab is fixed at any support two panels distant therefrom provided the slab continuous beyond the point.

c) For the purpose of determining relative stiffness of members, the moment of inertia of any slab or column may be assumed to be that of the gross cross-section of the concrete alone.

d) Variations of moment of inertia along the axis of the slab on account of provision of drops shall be taken into account. In the case of recessed or coffered slab which is made solid in the region of the columns, the stiffening effect may be ignored provided the solid part of the slab does not extend more than 0.15 l_{ef}, into the span measured from the centre-line of the columns. The stiffening effect of flared column heads may be ignored.

30.5.2 *Loading Pattern*

30.5.2.1 When the loading pattern is known, the structure shall be analysed for the load concerned.

30.5.2.2 When the live load is variable but does not exceed three-quarters of the dead load, or the nature of the live load is such that all panels will be loaded simultaneously, the maximum moments may be assumed to occur at all sections when full design live load is on the entire slab system.

30.5.2.3 For other conditions of live load/dead load ratio and when all panels are not loaded simultaneously,

a) maximum positive moment near midspan of a panel may be assumed to occur when three-quarters of the full design live load is on the panel and on alternate panels; and

b) maximum negative moment in the slab at a support may be assumed to occur when three-quarters of the full design live load is on the adjacent panels only.

30.5.2.4 In no case shall design moments be taken to be less than those occurring with full design live load on all panels.

30.5.3 *Negative Design Moment*

30.5.3.1 At interior supports, the critical section for negative moment, in both the column strip and middle strip, shall be taken at the face of rectilinear supports, but in no case at a distance greater than 0.175 l_1 from the centre of the column where l_1 is the length of the span in the direction moments are being determined, measured centre-to-centre of supports.

30.5.3.2 At exterior supports provided with brackets or capitals, the critical section for negative moment in the direction perpendicular to the edge shall be taken at a distance from the face of the supporting element not greater than one-half the projection of the bracket or capital beyond the face of the supporting element.

30.5.3.3 Circular or regular polygon shaped supports shall be treated as square supports having the same area.

30.5.4 *Modification of Maximum Moment*

Moments determined by means of the equivalent frame method, for slabs which fulfil the limitations of **30.4** may be reduced in such proportion that the numerical sum of the positive and average negative moments is not less than the value of total design moment M_o specified in **30.4.2.2**.

30.5.5 *Distribution of Bending Moment Across the Panel Width*

30.5.5.1 *Column strip : Negative moment at an interior support*

At an interior support, the column strip shall be designed to resist 75 percent of the total negative moment in the panel at that support.

30.5.5.2 *Column strip : Negative moment at a exterior support*

a) At an exterior support, the column strip shall be designed to resist the total negative moment in the panel at that support.

b) Where the exterior support consists of a column or a wall extending for a distance equal to or greater than three-quarters of the value of l_2, the length of span transverse to the direction moments are being determined, the exterior negative moment shall be considered to be uniformly distributed across the length l_2.

30.5.5.3 *Column strip : Positive moment for each span*

For each span, the column strip shall be designed to resist 60 percent of the total positive moment in the panel.

30.5.5.4 *Moments in the middle strip*

The middle strip shall be designed on the following bases:

a) That portion of the design moment not resisted by the column strip shall be assigned to the adjacent middle strips.

b) Each middle strip shall be proportioned to resist the sum of the moments assigned to its two half middle strips.

c) The middle strip adjacent and parallel to an edge supported by a wall shall be proportioned to resist twice the moment assigned to half the middle strip corresponding to the first row of interior columns.

30.6 Shear in Flat Slab

30.6.1 The critical section for shear shall be at a distance $d/2$ from the periphery of the column/capital/drop panel, perpendicular to the plane of the slab where d is the effective depth of the section (*see* Fig. 12). The shape in plan is geometrically similar to the support immediately below the slab (*see* Fig. 13A and Fig.13B).

NOTE — For column sections with re-entrant angles, the critical section shall be taken as indicated in Fig. 13C and Fig. 13D.

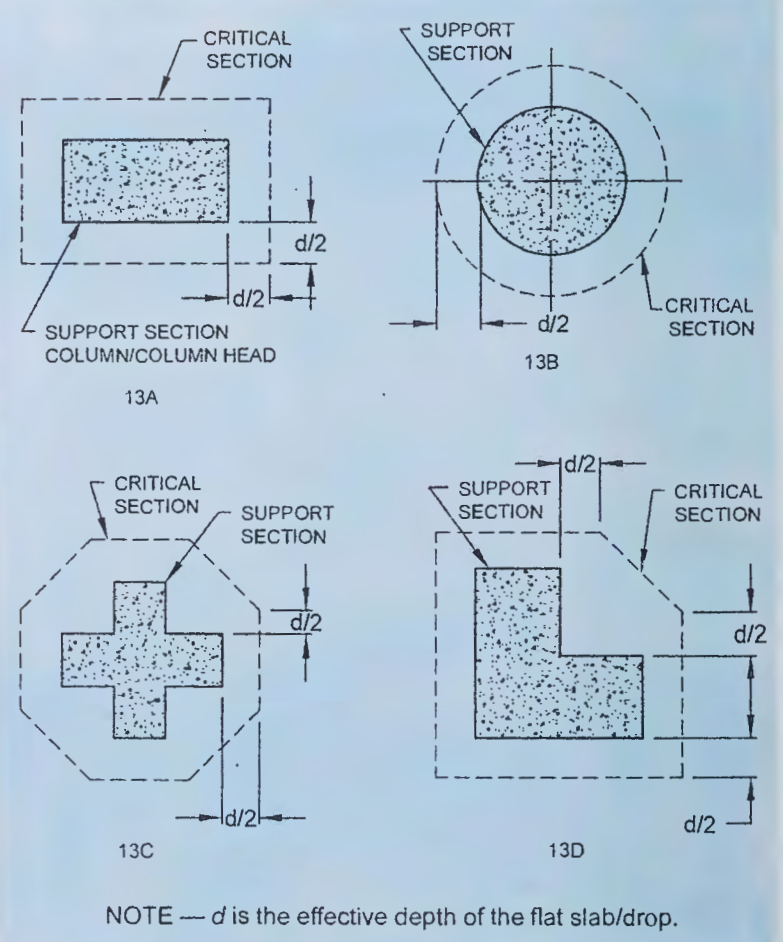

NOTE — d is the effective depth of the flat slab/drop.

FIG. 13 CRITICAL SECTIONS IN PLAN FOR SHEAR IN FLAT SLABS

30.6.1.1 In the case of columns near the free edge of a slab, the critical section shall be taken as shown in Fig. 14.

30.6.1.2 When openings in flat slabs are located at a distance less than ten times the thickness of the slab from a concentrated reaction or when the openings are located within the column strips, the critical sections specified in **30.6.1** shall be modified so that the part of the periphery of the critical section which is enclosed by radial projections of the openings to the centroid of the reaction area shall be considered ineffective (*see* Fig. 15), and openings shall not encroach upon column head.

30.6.2 *Calculation of Shear Stress*

The shear stress τ_v shall be the sum of the values calculated according to **30.6.2.1** and **30.6.2.2.**

30.6.2.1 The nominal shear stress in flat slabs shall be taken as $V/b_0 d$ where V is the shear force due to design load, b_0 is the periphery of the critical section and d is the effective depth.

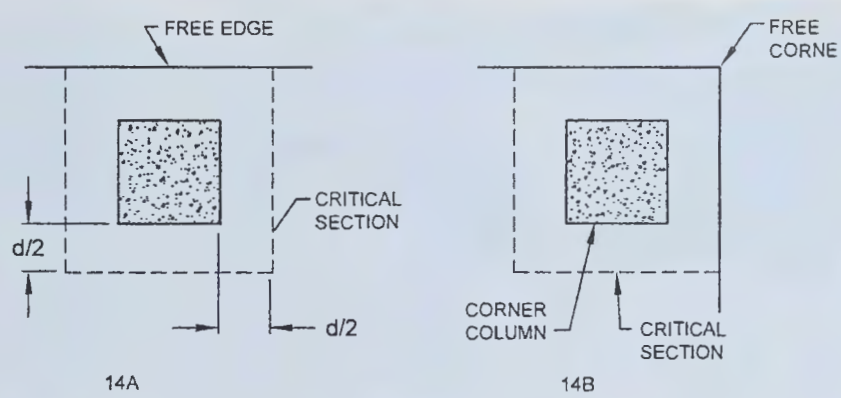

FIG. 14 EFFECT OF FREE EDGES ON CRITICAL SECTION FOR SHEAR

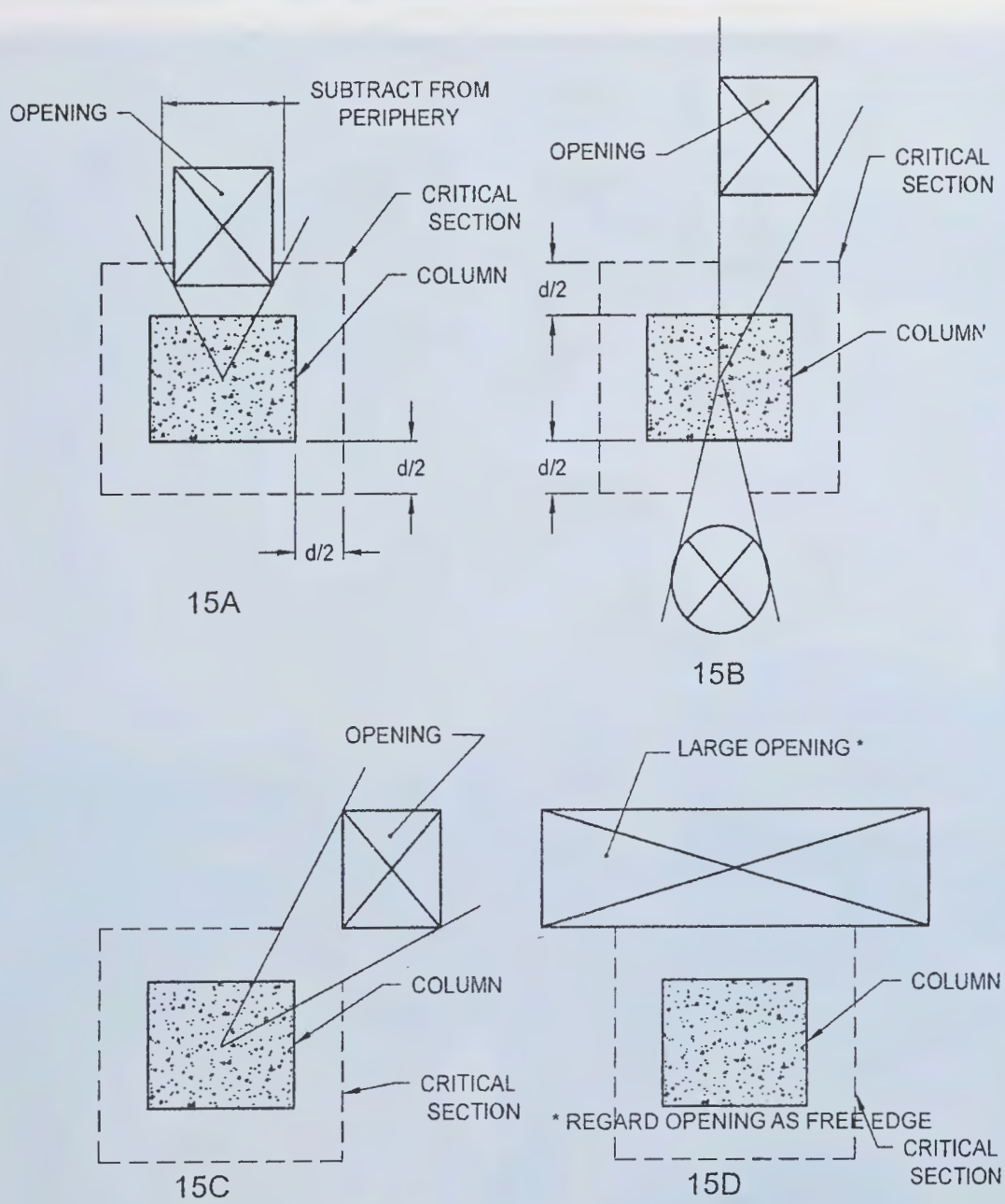

FIG. 15 EFFECT OF OPENINGS ON CRITICAL SECTION FOR SHEAR

30.6.2.2 When unbalanced gravity load, wind, earthquake or other forces cause transfer of bending moment between slab and column, a fraction $(1 - \alpha)$ of the moment shall be considered transferred by eccentricity of the shear about the centroid of the critical section. Shear stresses shall be taken as varying linearly about the centroid of the critical section. The value of á shall be obtained from the equation given in **30.3.3**.

30.6.3 *Permissible Shear Stress*

30.6.3.1 When shear reinforcemcnt is not provided, the calculated shear stress at the critical section shall not exceed $k_s\tau_c$,

where

k_s = $(0.5 + \beta_c)$ but not greater than 1, β_c being the ratio of short side to long side of the column/capital; and

τ_c = $0.25\sqrt{f_{ck}}$ in limit state method of design, and $0.16\sqrt{f_{ck}}$ in working stress method of design.

30.6.3.2 When the shear stress at the critical section exceeds the value given in **30.6.3.1**, but less than $1.5\tau_c$ shear reinforcement shall be provided. If the shear stress exceeds $1.5\tau_c$, the flat slab shall be redesigned. Shear stresses shall be investigated at successive sections more distant from the support and shear reinforcement shall be provided up to a section where the shear stress does not exceed $0.5\tau_c$. While designing the shear reinforcement, the shear stress carried by the concrete shall be assumed to be $0.5\tau_c$ and reinforcement shall carry the remaining shear.

30.7 Slab Reinforcement

30.7.1 *Spacing*

The spacing of bars in a flat slab, shall not exceed 2 times the slab thickness, except where a slab is of cellular or ribbed construction.

30.7.2 *Area of Reinforcement*

When drop panels are used, the thickness of drop panel for determination of area of reinforcement shall be the lesser of the following:

a) Thickness of drop, and

b) Thickness of slab plus one quarter the distance between edge of drop and edge of capital.

30.7.3 *Minimum Length of Reinforcement*

a) Reinforcement in flat slabs shall have the minimum lengths specified in Fig. 16. Larger lengths of reinforcement shall be provided when required by analysis.

b) Where adjacent spans are unequal, the extension of negative reinforcement beyond each face of the common column shall be based on the longer span.

c) The length of reinforcement for slabs in frames not braced against sideways and for slabs rcsisting lateral loads shall be determined by analysis but shall not be less than those prescribed in Fig. 16.

30.7.4 *Anchoring Reinforcement*

a) All slab reinforcement perpendicular to a discontinuous edge shall have an anchorage (straight, bent or otherwise anchored) past the internal face of the spandrel beam, wall or column, of an amount :

   1) *For positive reinforcement* – Not less than 150 mm except that with fabric reinforcement having a fully welded transverse wire directly over the support, it shall be permissible to reduce this length to one-half of the width of the support or 50 mm, whichever is greater; and

   2) *For negative reinforcement* – Such that the design stress is developed at the internal face, in accordance with Section 5A (C).

b) Where the slab is not supported by a spandrel beam or wall, or where the slab cantilevers beyond the support, the anchorage shall be obtained within the slab.

30.8 Openings in Flat Slabs

Openings of any size may be provided in the flat slab, if it is shown by analysis that the requirements of strength and serviceability are met. However, for openings conforming to the following, no special analysis is required.

a) Openings of any size may be placed within the middle half of the span in each direction, provided the total amount of reinforcement required for the panel without the opening is maintained.

b) In the area common to two column strips, not more than one-eighth of the width of strip in either span shall be interrupted by the openings. The equivalent of reinforcement interrupted shall be added on all sides of the openings.

c) In the area common to one column strip and one middle strip, not more than one-quarter of the reinforcement in either strip shall be interrupted by the openings. The equivalent

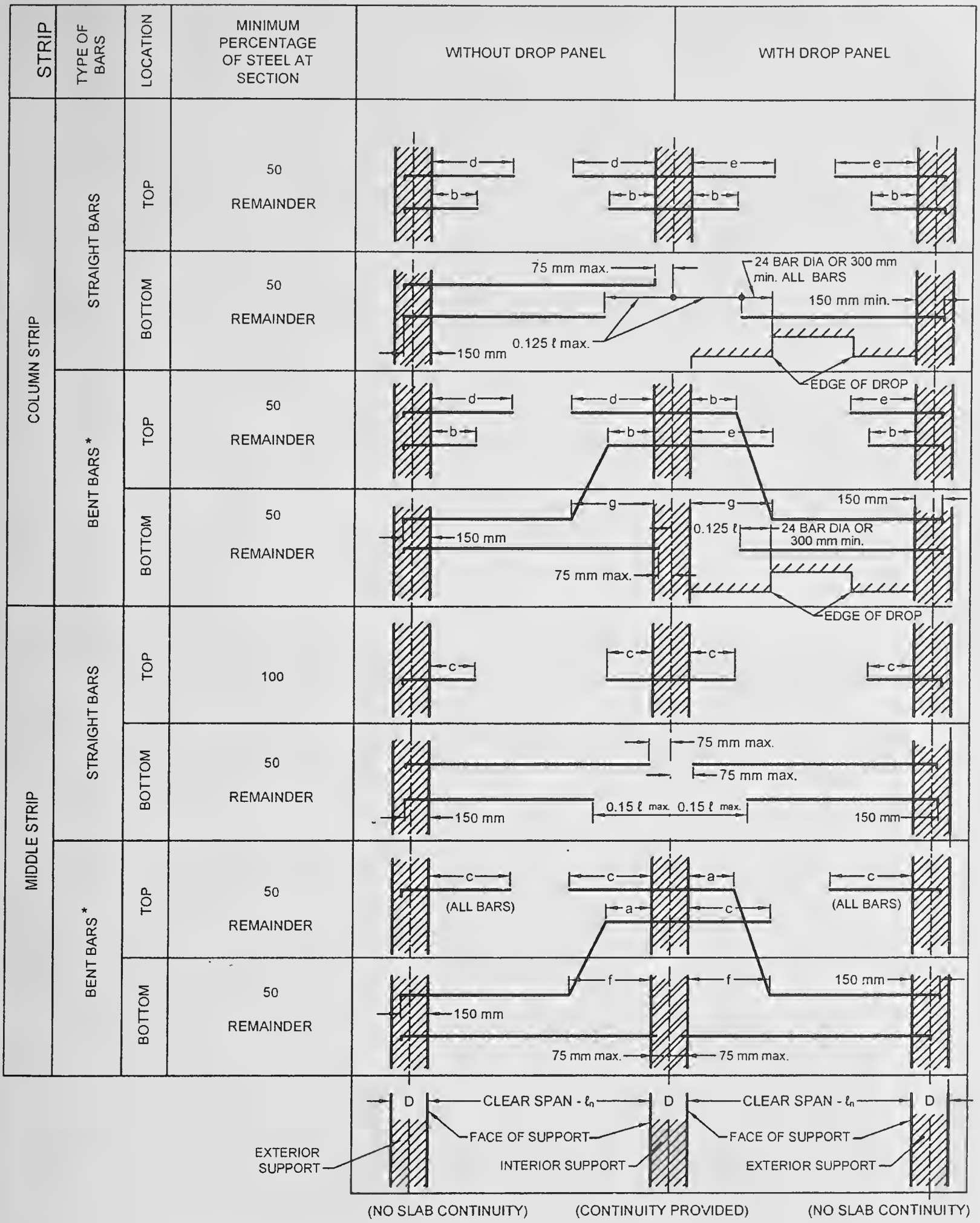

	Bar Length from face of Support						
	Minimum Length					*Maximum Length*	
Mark	a	b	c	d	e	f	g
Length	0.14 l_n	0.20 l_n	0.22 l_n	0.30 l_n	0.33 l_n	0.20 l_n	0.24 l_n

* Bent bars at exterior supports may be used, if a general analysis is made.

NOTE — *D* is the diameter of the column and the dimension of the rectangular column in the direction under consideration.

FIG. 16 MINIMUM BEND JOINT LOCATION AND EXTENSION FOR REINFORCEMENT IN FLAT SLABS

of reinforcement interrupted shall be added on all sides of the openings.

d) The shear requirements of **30.6** shall be satisfied.

31 WALLS

31.1 General

Reinforced concrete walls subjected to direct compression or combined flexure and direct compression should be designed in accordance with Section 5 or Annex B provided the vertical reinforcement is provided in each face. Braced walls subjected to only vertical compression may be designed as per empirical procedure given in **31.2**. The minimum thickness of walls shall be 100 mm.

31.1.1 Guidelines or design of walls subjected to horizontal and vertical loads are given in **31.3**.

31.2 Empirical Design Method for Walls Subjected to In-Plane Vertical Loads

31.2.1 *Braced Walls*

Walls shall be assumed to be braced if they are laterally supported by a structure in which all the following apply:

a) Walls or vertical braced elements are arranged in two directions so as to provide lateral stability to the structure as a whole.

b) Lateral forces are resisted by shear in the planes of these walls or by braced elements.

c) Floor and roof systems are designed to transfer lateral forces.

d) Connections between the wall and the lateral supports are designed to resist a horizontal force not less than,

   1) the simple static reactions to the total applied horizontal forces at the level of lateral support; and

   2) 2.5 percent of the total vertical load that the wall is designed to carry at the level of lateral support.

31.2.2 *Eccentricity of Vertical Load*

The design of a wall shall take account of the actual eccentricity of the vertical force subject to a minimum value of 0.05 t.

The vertical load transmitted to a wall by a discontinuous concrete floor or roof shall be assumed to act at one-third the depth of the bearing area measured from the span face of the wall. Where there is an *in-situ* concrete floor continuous over the wall, the load shall be assumed to act at the centre of the wall.

The resultant eccentricity of the total vertical load on a braced wall at any level between horizontal lateral supports, shall be calculated on the assumption that the resultant eccentricity of all the vertical loads above the upper support is zero.

31.2.3 *Maximum Effective Height to Thickness Ratio*

The ratio of effective height to thickness, H_{we}/t shall not exceed 30.

31.2.4 *Effective Height*

The effective height of a braced wall shall be taken as follows:

a) Where restrained against rotation at both ends by:

   1) floors : 0.75 H_w or

   2) intersecting walls or similar members, whichever is the lesser. : 0.75 L_1

b) Where not restrained against rotation at both ends by:

   1) floors : 1.0 H_w or

   2) intersecting walls or similar members, whichever is the lesser. : 1.0 L_1

where

H_w = unsupported height of the wall.

L_1 = horizontal distance between centres of lateral restraint.

31.2.5 *Design Axial Strength of Wall*

The design axial strength P_{uw} per unit length of a braced wall in compression may be calculated from the following equation:

$$P_{uw} = 0.3\,(t - 1.2e - 2e_a)\,f_{ck}$$

where

t = thickness of the wall,

e = eccentricity of load measured at right angles to the plane of the wall determined in accordance with **31.2.2**, and

e_a = additional eccentricity due to slenderness effect taken as $H_{we}^2/2\ 500t$.

31.3 Walls Subjected to Combined Horizontal and Vertical Forces

31.3.1 When horizontal forces are in the plane of the wall, it may be designed for vertical forces in accordance with **31.2** and for horizontal shear in accordance with **31.4**. In plane bending may be neglected in case a horizontal cross-section of the wall is always under compression due to combined effect

of horizontal and vertical loads.

31.3.2 Walls subjected to horizontal forces perpendicular to the wall and for which the design axial load does not exceed $0.04 f_{ck} A_g$, shall be designed as slabs in accordance with the appropriate provisions under **23**, where A_g is gross area of the section.

31.4 Design for Horizontal Shear

31.4.1 *Critical Section for Shear*

The critical section for maximum shear shall be taken at a distance from the base of 0.5 L_w or 0.5 H_w, whichever is less.

31.4.2 *Nominal Shear Stress*

The nominal shear stress τ_{vw} in walls shall be obtained as follows:

$$\tau_{vw} = \frac{V_u}{t.d}$$

where

V_u = shear force due to design loads,

t = wall thickness,

d = $0.8 \times L_w$, where L_w is the length of the wall.

31.4.2.1 Under no circumstances shall the nominal shear stress τ_{cw} in walls exceed $0.17 f_{ck}$ in limit state method and $0.12 f_{ck}$ in working stress method.

31.4.3 *Design Shear Strength of Concrete*

The design shear strength of concrete in walls, τ_{cw}, without shear reinforcement shall be taken as below :

a) For $H_w / L_w \leq 1$

$$\tau_{cw} = (3.0 - H_w / L_w) K_1 \sqrt{f_{ck}}$$

where K_1 is 0.2 in limit state method and 0.13 in working stress method.

b) For $H_w / L_w > 1$

Lesser of the values calculated from (a) above and from,

$$\tau_{cw} = K_2 \sqrt{f_{ck}} \frac{(H_w / L_w + 1)}{(H_w / L_w - 1)}$$

where K_2 is 0.045 in limit state method and 0.03 in working stress method, but τ_{cw} shall be not less than $K_3 \sqrt{f_{ck}}$ in any case where K_3 is 0.15 in limit state method and 0.10 in working stress method.

31.4.4 *Design of Shear Reinforcement*

Shear reinforcement shall be provided to carry a shear equal to $V_u - \tau_{cw}.t \ (0.8 L_w)$. In case of working stress method V_u is replaced by V. The strength of shear reinforcement shall be calculated as per **39.4** or **B-5.4** with A_{av} defined as below:

$$A_{av} = P_w (0.8 L_w) t$$

where P_w is determined as follows :

a) For walls where $H_w / L_w \leq 1$, P_w shall be the lesser of the ratios of either the vertical reinforcement area or the horizontal reinforcement area to the cross-sectional area of wall in the respective direction.

b) For walls where $H_w / L_w > 1$, P_w shall be the ratio of the horizontal reinforcement area to the cross-sectional area of wall per vertical metre.

31.5 Minimum Requirements for Reinforcement in Walls

The reinforcement for walls shall be provided as below:

a) The minimum ratio of vertical reinforcement to gross concrete area shall be:

   1) 0.001 2 for deformed bars not larger than 16 mm in diameter and with a characteristic strength of 415 N/mm^2 or greater.

   2) 0.001 5 for other types of bars.

   3) 0.001 2 for welded wire fabric not larger than 16 mm in diameter.

b) Vertical reinforcement shall be spaced not farther apart than three times the wall thickness nor 450 mm.

c) The minimum ratio of horizontal reinforcement to gross concrete area shall be:

   1) 0.002 0 for deformed bars not larger than 16 mm in diameter and with a characteristic strength of 415 N/mm^2 or greater.

   2) 0.002 5 for other types of bars.

   3) 0.002 0 for welded wire fabric not larger than 16 mm in diameter.

d) Horizontal reinforcement shall be spaced not farther apart than three times the wall thickness nor 450 mm.

NOTE — The minimum reinforcement may not always be sufficient to provide adequate resistance to the effects of shrinkage and temperature.

31.5.1 For walls having thickness more than 200 mm, the vertical and horizontal reinforcement shall be provided in two grids, one near each face of the wall.

31.5.2 Vertical reinforcement need not be enclosed by

transverse reinforcement as given in **25.5.3.2** for column, if the vertical reinforcement is not greater than 0.01 times the gross sectional area or where the vertical reinforcement is not required for compression.

32 STAIRS

32.1 Effective Span of Stairs

The effective span of stairs without stringer beams shall be taken as the following horizontal distances :

a) Where supported at top and bottom risers by beams spanning parallel with the risers, the distance centre-to-centre of beams ;

b) Where spanning on to the edge of a landing slab, which spans parallel, with the risers (*see* Fig. 17), a distance equal to the going of the stairs plus at each end either half the width of the landing or one metre, whichever is smaller; and

c) Where the landing slab spans in the same direction as the stairs, they shall be considered as acting together to form a single slab and the span determined as the distance centre-to-centre of the supporting beams or walls, the going being measured horizontally.

32.2 Distribution of Loading on Stairs

In the case of stairs with open wells, where spans partly crossing at right angles occur, the load on areas common to any two such spans may be taken as one-half in each direction as shown in Fig. 18. Where flights or landings are embedded into walls for a length of not less than 110 mm and are designed to span in the direction of the flight, a 150 mm strip may be deducted from the loaded area and the effective breadth of the section increased by 75 mm for purposes of design (*see* Fig. 19).

32.3 Depth of Section

The depth of section shall be taken as the minimum thickness perpendicular to the soffit of the staircase.

33 FOOTINGS

33.1 General

Footings shall be designed to sustain the applied loads, moments and forces and the induced reactions and to ensure that any settlement which may occur shall be as nearly uniform as possible, and the safe bearing

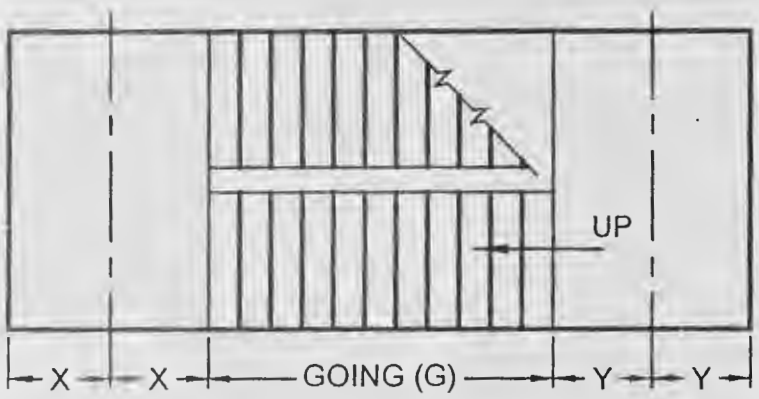

X	Y	SPAN (m)
< 1 m	< 1 m	G + X + Y
< 1 m	≥ 1 m	G + X + 1
≥ 1 m	< 1 m	G + Y + 1
≥ 1 m	≥ 1 m	G + 1 + 1

FIG. 17 EFFECTIVE SPAN FOR STAIRS SUPPORTED AT EACH END BY LANDINGS SPANNING PARALLEL WITH THE RISERS

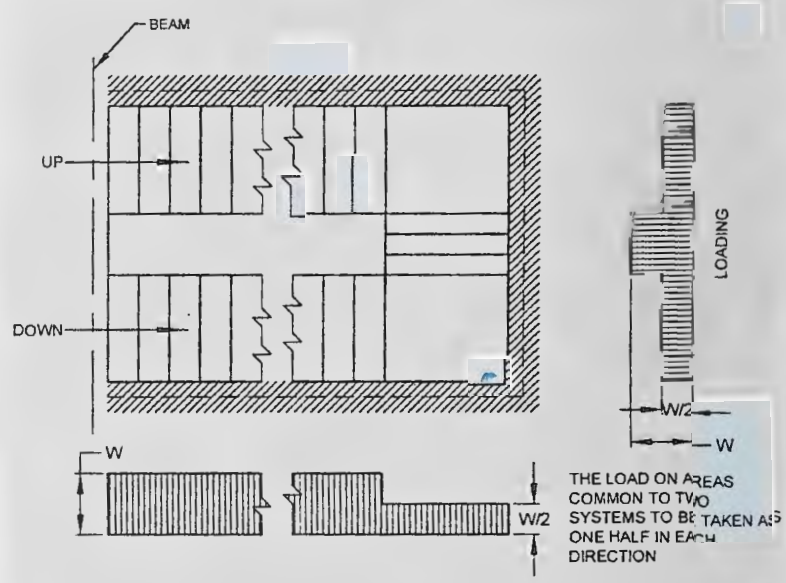

FIG. 18 LOADING ON STAIRS WITH OPEN WELLS

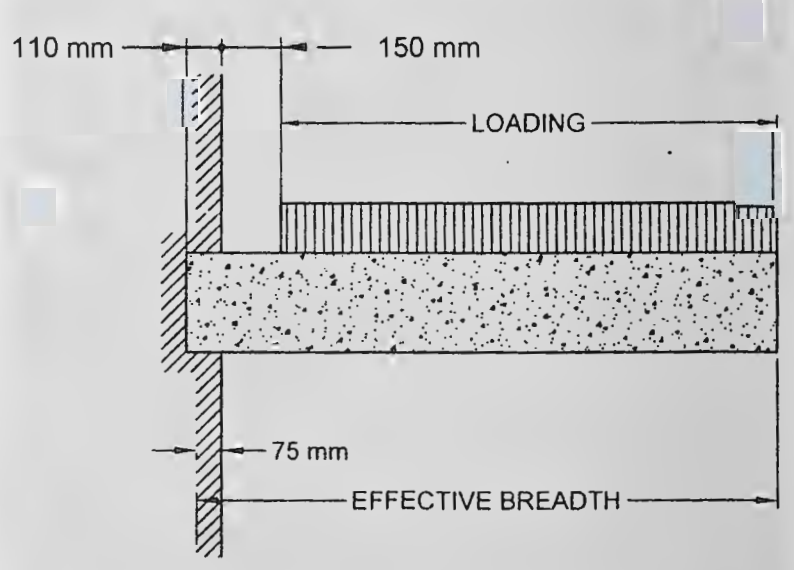

FIG. 19 LOADING ON STAIRS BUILT INTO WALLS

capacity of the soil is not exceeded (*see* Part 6 'Structural Design, Section 2 Soils and Foundations' of the Code).

33.1.1 In sloped or stepped footings the effective cross-section in compression shall be limited by the area above the neutral plane, and the angle of slope or depth and location of steps shall be such that the design requirements are satisfied at every section. Sloped and stepped footings that are designed as a unit shall be constructed to assure action as a unit.

33.1.2 *Thickness at the Edge of Footing*

In reinforced and plain concrete footings, the thickness at the edge shall be not less than 150 mm for footings on soils, nor less than 300 mm above the tops of piles for footings on piles.

33.1.3 In the case of plain concrete pedestals, the angle between the plane passing through the bottom edge of the pedestal and the corresponding junction edge of the column with pedestal and the horizontal plane (*see* Fig. 20) shall be governed by the expression :

$$\tan\alpha \nless 0.9\sqrt{\frac{100q_o}{f_{ck}}+1}$$

where

q_o = calculated maximum bearing pressure at the base of the pedestal, in N/mm^2; and

f_{ck} = characteristic strength of concrete at 28 days, in N/mm^2.

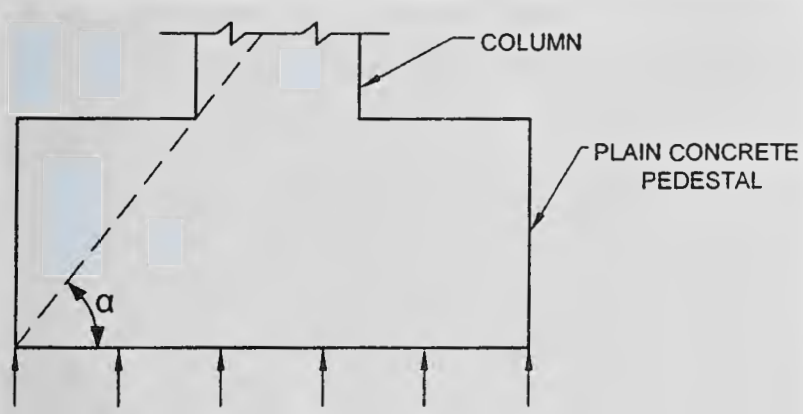

FIG. 20

33.2 Moments and Forces

33.2.1 In the case of footings on piles, computation for moments and shears may be based on the assumption that the reaction from any pile is concentrated at the centre of the pile.

33.2.2 For the purpose of computing stresses in footings which support a round or octagonal concrete column or pedestal, the face of the column or pedestal shall be taken as the side of a square inscribed within the perimeter of the round or octagonal column or pedestal.

33.2.3 *Bending Moment*

33.2.3.1 The bending moment at any section shall be determined by passing through the section a vertical plane which extends completely across the footing, and computing the moment of the forces acting over the entire area of the footing on one side of the said plane.

33.2.3.2 The greatest bending moment to be used in the design of an isolated concrete footing which supports a column, pedestal or wall, shall be the moment computed in the manner prescribed in **33.2.3.1** at sections located as follows:

a) At the face of the column, pedestal or wall, for footings supporting a concrete column, pedestal or wall ;

b) Halfway between the centre-line and the edge of the wall, for footings under masonry walls; and

c) Halfway between the face of the column or pedestal and the edge of the gusseted base, for footings under gusseted bases.

33.2.4 *Shear and Bond*

33.2.4.1 The shear strength of footings is governed by the more severe of the following two conditions:

a) Footing acting essentially as a wide beam, with a potential diagonal crack extending in a plane across the entire width; the critical section for this condition shall be assumed as a vertical section located from the face of the column, pedestal or wall at a distance equal to the effective depth of footing in case of footings on soils, and at a distance equal to half the effective depth of footing for footings on piles.

b) Two-way action of the footing, with potential diagonal cracking along the surface of truncated cone or pyramid around the concentrated load; in this case, the footing shall be designed for shear in accordance with appropriate provisions specified in **30.6**.

33.2.4.2 In computing the external shear on any section through a footing supported on piles, the entire reaction from any pile of diameter D_p whose centre is located $D_p/2$ or more outside the section shall be assumed as producing shear on the section; the reaction from any pile whose centre is located $D_p/2$ or more inside the section shall be assumed as producing no shear on the section. For intermediate positions of the pile centre, the portion of the pile reaction to be assumed as producing shear on the

section shall be based on straight line interpolation between full value at $D_p/2$ outside the section and zero value at $D_p/2$ inside the section.

33.2.4.3 The critical section for checking the development length in a footing shall be assumed at the same planes as those described for bending moment in **33.2.3** and also at all other vertical planes where abrupt changes of section occur. If reinforcement is curtailed, the anchorage requirements shall be checked in accordance with **25.2.3**.

33.3 Tensile Reinforcement

The total tensile reinforcement at any section shall provide a moment of resistance at least equal to the bending moment on the section calculated in accordance with **33.2.3**.

33.3.1 Total tensile reinforcement shall be distributed across the corresponding resisting section as given below:

a) In one-way reinforced footing, the reinforcement shall be distributed uniformly across the full width of the footing;

b) In two-way reinforced square footing, the reinforcement extending in each direction shall be distributed uniformly across the full width of the footing; and

c) In two-way reinforced rectangular footing, the reinforcement in the long direction shall be distributed uniformly across the full width of the footing. For reinforcement in the short direction, a central band equal to the width of the footing shall be marked along the length of the footing and portion of the reinforcement determined in accordance with the equation given below shall be uniformly distributed across the central band:

$$\frac{\text{Reinforcement in central band width}}{\text{Total reinforcement in short direction}} = \frac{2}{\beta+1}$$

where β is the ratio of the long side to the short side of the footing. The remainder of the reinforcement shall be uniformly distributed in the outer portions of the footing.

33.4 Transfer of Load at the Base of Column

The compressive stress in concrete at the base of a column or pedestal shall be considered as being transferred by bearing to the top of the supporting pedestal or footing. The bearing pressure on the loaded area shall not exceed the permissible bearing stress in direct compression multiplied by a value equal to $\sqrt{\frac{A_1}{A_2}}$ but not greater than 2;

where

A_1 = supporting area for bearing of footing, which inE sloped or stepped footing may be taken as the area of the lower base of the largest frustum of a pyramid or cone contained wholly within the footing and having for its upper base, the area actually loaded and having side slope of one vertical to two horizontal; and

A_2 = loaded area at the column base.

For working stress method of design the permissible bearing stress on full area of concrete shall be taken as $0.25 f_{ck}$; for limit state method of design the permissible bearing stress shall be $0.45 f_{ck}$.

33.4.1 Where the permissible bearing stress on the concrete in the supporting or supported member would be exceeded, reinforcement shall be provided for developing the excess force, either by extending the longitudinal bars into the supporting member, or by dowels (*see* **33.4.3**).

33.4.2 Where transfer of force is accomplished by reinforcement, the development length of the reinforcement shall be sufficient to transfer the compression or tension to the supporting member in accordance with **25.2**.

33.4.3 Extended longitudinal reinforcement or dowels of at least 0.5 percent of the cross-sectional area of the supported column or pedestal and a minimum of four bars shall be provided. Where dowels are used, their diameter shall not exceed the diameter of the column bars by more than 3 mm.

33.4.4 Column bars of diameters larger than 36 mm, in compression only can be dowelled at the footings with bars of smaller size of the necessary area. The dowel shall extend into the column, a distance equal to the development length of the column bar and into the footing, a distance equal to the development length of the dowel.

33.5 Nominal Reinforcement

33.5.1 Minimum reinforcement and spacing shall be as per the requirements of solid slab.

33.5.2 The nominal reinforcement for concrete sections of thickness greater than 1 m shall be 360 mm^2 per metre length in each direction on each face. This provision does not supersede the requirement of minimum tensile reinforcement based on the depth of the section.

SECTION 5A (E) STRUCTURAL DESIGN (LIMIT STATE METHOD)

34 SAFETY AND SERVICEABILITY REQUIREMENTS

34.1 General

In the method of design based on limit state concept, the structure shall be designed to withstand safely all loads liable to act on it throughout its life; it shall also satisfy the serviceability requirements, such as limitations on deflection and cracking. The acceptable limit for the safety and serviceability requirements before failure occurs is called a 'limit state'. The aim of design is to achieve acceptable probabilities that the structure will not become unfit for the use for which it is intended, that is, that it will not reach a limit state.

34.1.1 All relevant limit states shall be considered in design to ensure an adequate degree of safety and serviceability. In general, the structure shall be designed on the basis of the most critical limit state and shall be checked for other limit states.

34.1.2 For ensuring the above objective, the design should be based on characteristic values for material strengths and applied loads, which take into account the variations in the material strengths and in the loads to be supported. The characteristic values should be based on statistical data, if available; where such data are not available they should be based on experience. The 'design values' are derived from the characteristic values through the use of partial safety factors, one for material strengths and the other for loads. In the absence of special considerations these factors should have the values given in **35** according to the material, the type of loading and the limit state being considered.

34.2 Limit State of Collapse

The limit state of collapse of the structure or part of the structure could be assessed from rupture of one or more critical sections and from buckling due to elastic or plastic instability (including the effects of sway where appropriate) or overturning. The resistance to bending, shear, torsion and axial loads at every section shall not be less than the appropriate value at that section produced by the probable most unfavourable combination of loads on the structure using the appropriate partial safety factors.

34.3 Limit States of Serviceability

34.3.1 *Deflection*

Limiting values of deflections are given in **22.2**.

34.3.2 *Cracking*

Cracking of concrete should not adversely affect the appearance or durability of the structure; the acceptable limits of cracking would vary with the type of structure and environment. Where specific attention is required to limit the designed crack width to a particular value, crack width calculation may be done using formula given in Annex G.

The practical objective of calculating crack width is merely to give guidance to the designer in making appropriate structural arrangements and in avoiding gross errors in design, which might result in concentration and excessive width of flexural crack.

The surface width of the cracks should not, in general, exceed 0.3 mm in members where cracking is not harmful and does not have any serious adverse effects upon the preservation of reinforcing steel nor upon the durability of the structures. In members where cracking in the tensile zone is harmful either because they are exposed to the effects of the weather or continuously exposed to moisture or in contact soil or ground water, an upper limit of 0.2 mm is suggested for the maximum width of cracks. For particularly aggressive environment, such as 'very severe' and 'extreme' categories given in Table 3, the assessed surface width of cracks should not in general, exceed 0.1 mm.

34.4 Other Limit States

Structures designed for unusual or special functions shall comply with any relevant additional limit state considered appropriate to that structure.

35 CHARACTERISTIC AND DESIGN VALUES AND PARTIAL SAFETY FACTORS

35.1 Characteristic Strength of Materials

The term 'characteristic strength' means that value of the strength of the material below which not more than 5 percent of the test results are expected to fall. The characteristic strength for concrete shall be in accordance with Table 2. Until the relevant Indian Standard Specifications for reinforcing steel are modified to include the concept of characteristic strength, the characteristic value shall be assumed as the minimum yield stress/0.2 percent proof stress specified in the relevant Indian Standard Specifications.

35.2 Characteristic Loads

The term 'characteristic load' means that value of load which has a 95 percent probability of not being exceeded during the life of the structure. Since data are not available to express loads in statistical terms, for the purpose of this standard, dead loads, imposed loads, wind loads, snow load and seismic forces in accordance with Part 6 'Structural Design, Section 1 Loads, Forces and Effects' of the Code shall be assumed as the characteristic loads.

35.3 Design Values

35.3.1 *Materials*

The design strength of the materials, f_d is given by:

$$f_d = \frac{f}{\gamma_m}$$

where

f = characteristic strength of the material (*see* **35.1**), and

γ_m = partial safety factor appropriate to the material and the limit state being considered.

35.3.2 *Loads*

The design load, F_d is given by:

$$F_d = F\gamma_f$$

where

F = characteristic load (*see* **35.2**), and

γ_f = partial safety factor appropriate to the nature of loading and the limit state being considered.

35.3.3 *Consequences of Attaining Limit State*

Where the consequences of a structure attaining a limit state are of a serious nature such as huge loss of life and disruption of the economy, higher values for γ_f and γ_m than those given under **35.4.1** and **35.4.2** may be applied.

35.4 Partial Safety Factors

35.4.1 *Partial Safety Factor γ_f for Loads*

The values γ_f given in Table 18 shall normally be used.

Table 18 Values of Partial Safety Factor γ_f for Loads

(*Clauses* 17.2.3.1, 35.4.1 *and* B-4.3)

Sl No.	Load Combination	Limit State of Collapse			Limit States of Serviceability		
		DL	*IL*	*WL*	*DL*	*IL*	*WL*
(1)	(2)	(3)	(4)	(5)	(6)	(7)	(8)
i)	*DL+ IL*	1.5	1.5	–	1.0	1.0	–
ii)	*DL+ WL*	1.5 or 0.9[1)]	–	1.5	1.0	–	1.0
iii)	*DL+ IL+ WL*	1.2	1.2	1.2	1.0	0.8	0.8

NOTES

1 While considering earthquake effects, substitute *EL* for *WL*.

2 For the limit states of serviceability, the values of γ_f given in this table are applicable for short term effects. While assessing the long term effects due to creep the dead load and that part of the imposed load likely to be permanent may only be considered.

[1)] This value is to be considered when stability against overturning or stress reversal is critical.

35.4.2 *Partial Safety Factor γ_m for Material Strength*

35.4.2.1 When assessing the strength of a structure or structural member for the limit state of collapse, the values of partial safety factor, γ_m should be taken as 1.5 for concrete and 1.15 for steel.

NOTE — γ_m values are already incorporated in the equations and tables given in this standard for limit state design.

35.4.2.2 When assessing the deflection, the material properties such as modulus of elasticity should be taken as those associated with the characteristic strength of the material.

36 ANALYSIS

36.1 Analysis of Structure

Method of analysis as in **21** shall be used. The material strength to be assumed shall be characteristic values in the determination of elastic properties of members irrespective of the limit state being considered. Redistribution of the calculated moments may be made as given in **36.1.1**.

36.1.1 *Redistribution of Moments in Continuous Beams and Frames*

The redistribution of moments may be carried out satisfying the following conditions:

a) Equilibrium between the internal forces and the external loads is maintained.

b) The ultimate moment of resistance provided at any section of a member is not less than 70 percent of the moment at the section obtained from an elastic maximum moment diagram covering all appropriate combinations of loads.

c) The elastic moment at any section in a member due to a particular combination of loads shall not be reduced by more than 30 percent of the numerically largest moment given anywhere by the elastic maximum moments diagram for the particular member, covering all appropriate combination of loads.

d) At sections where the moment capacity after redistribution is less than that from the elastic maximum moment diagram, the following relationship shall be satisfied:

$$\frac{x_u}{d} + \frac{\delta M}{100} \leq 0.6$$

where

x_u = depth of neutral axis,

d = effective depth, and

δM = percentage reduction in moment.

e) In structures in which the structural frame

provides the lateral stability, the reduction in moment allowed by condition given in **36.1.1** (c) shall be restricted to 10 percent for structures over 4 storeys in height.

36.1.2 *Analysis of Slabs Spanning in Two Directions at Right Angles*

Yield line theory or any other acceptable method may be used. Alternatively the provisions given in Annex D may be followed.

37 LIMIT STATE OF COLLAPSE: FLEXURE

37.1 Assumptions

Design for the limit state of collapse in flexure shall be based on the assumptions given below:

a) Plane sections normal to the axis remain plane after bending.

b) The maximum strain in concrete at the outermost compression fibre is taken as 0.003 5 in bending.

c) The relationship between the compressive stress distribution in concrete and the strain in concrete may be assumed to be rectangle, trapezoid, parabola or any other shape which result in prediction of strength in substantial agreement with the results of test. An acceptable stress strain curve is given in Fig. 21. For design purposes, the compressive strength of concrete in the structure shall be assumed to be 0.67 times the characteristic strength. The partial safety factor $\gamma_m = 1.5$ shall be applied in addition to this.

NOTE — For the stress-strain curve in Fig. 21 the design stress block parameters are as follows (*see* Fig. 22):

Area of stress block $= 0.36 f_{ck} \cdot x_u$

Depth of centre of compressive force from the extreme fibre in compression $= 0.42\, x_u$

where

f_{ck} = characteristic compressive strength of concrete, and

x_u = depth of neutral axis.

d) The tensile strength of the concrete is ignored.

e) The stresses in the reinforcement are derived from representative stress-strain curve for the type of steel used. Typical curves are given in Fig. 23. For design purposes the partial safety factor γ_m, equal to 1.15 shall be applied.

f) The maximum strain in the tension reinforcement in the section at failure shall not be less than:

$$\frac{f_y}{1.15E_s} + 0.002$$

where

f_y = characteristic strength of steel, and

E_s = modulus of elasticity of steel.

NOTE — The limiting values of depth of neutral axis for different grades of steel based on the assumptions in **37.1** are as follows:

f_y	$x_{u,max}/d$
250	0.53
415	0.48
500	0.46

The expression for obtaining the moments of resistance for rectangular and T-Sections, based on the assumptions of **37.1**, are given in Annex H.

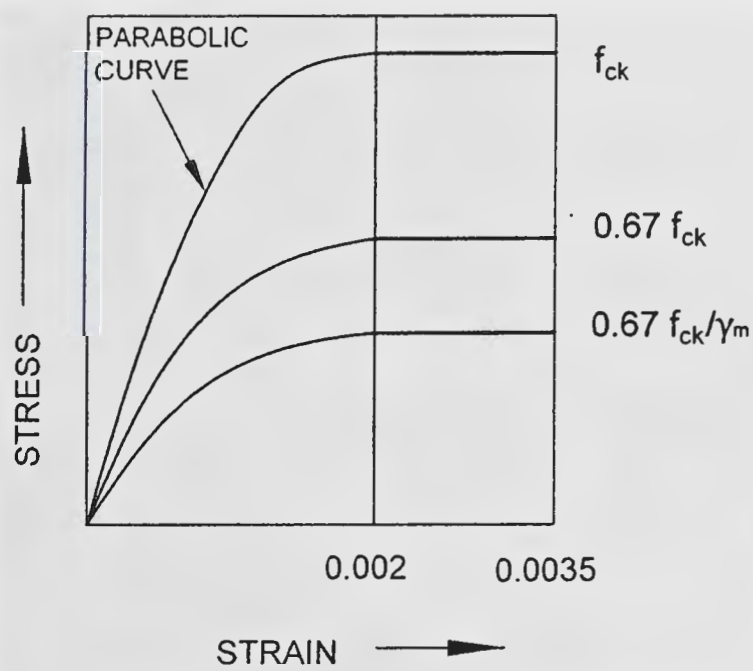

FIG. 21 STRESS-STRAIN CURVE FOR CONCRETE

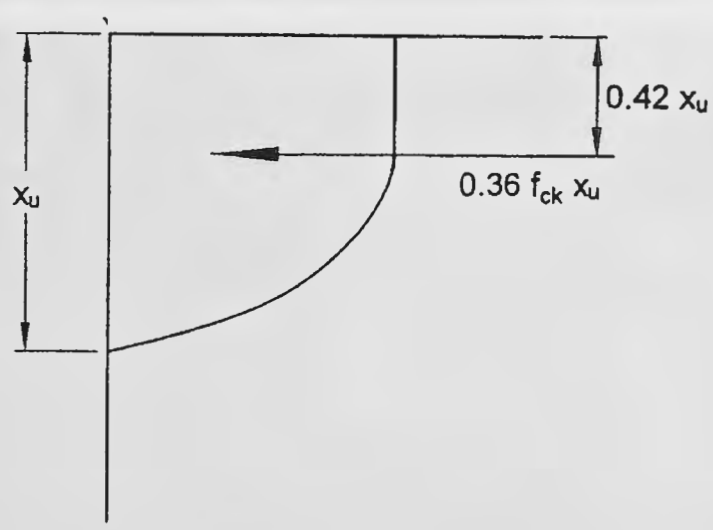

FIG. 22 STRESS BLUE PARAMETERS

38 LIMIT STATE OF COLLAPSE: COMPRESSION

38.1 Assumptions

In addition to the assumptions given in **37.1** (a) to **37.1** (e) for flexure, the following shall be assumed:

a) Maximum compressive strain in concrete in axial compression is taken as 0.002.

b) Maximum compressive strain at the highly compressed extreme fibre in concrete

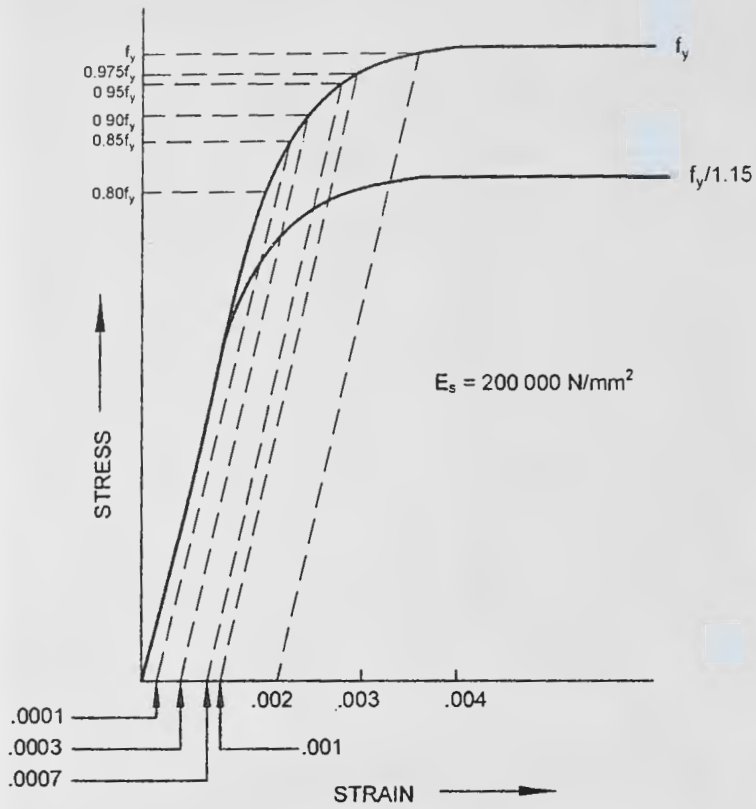

23A COLD WORKED DEFORMED BAR

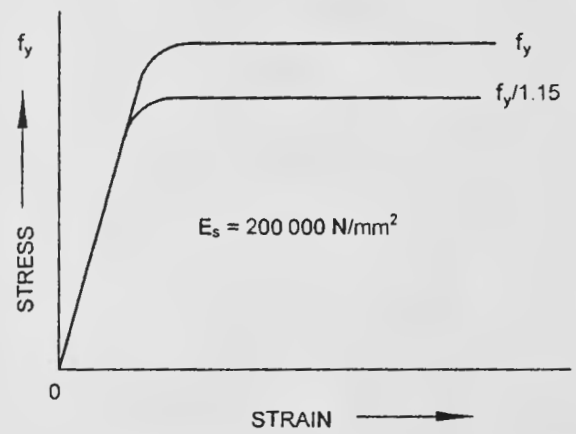

23B STEEL BAR WITH DEFINITE YIELD POINT

FIG. 23 REPRESENTATIVE STRESS-STRAIN CURVES FOR REINFORCEMENT

subjected to axial compression and bending and when there is no tension on the section shall be 0.003 5 minus 0.75 times the strain at the least compressed extreme fibre.

38.2 Minimum Eccentricity

All members in compression shall be designed for the minimum eccentricity in accordance with **24.4**. Where calculated eccentricity is larger, the minimum eccentricity should be ignored.

38.3 Short Axially Loaded Members in Compression

The member shall be designed by considering the assumptions given in **38.1** and the minimum eccentricity. When the minimum eccentricity as per **24.4** does not exceed 0.05 times the lateral dimension, the members may be designed by the following equation:

$$P_u = 0.4 f_{ck} A_c + 0.067 f_y A_{sc}$$

where

P_u = axial load on the member,

f_{ck} = characteristic compressive strength of the concrete,

A_c = area of concrete

f_y = characteristic strength of the compression reinforcement, and

A_{sc} = area of longitudinal reinforcement for columns.

38.4 Compression Members with Helical Reinforcement

The strength of compression members with helical reinforcement satisfying the requirement of **38.4.1** shall be taken as 1.05 times the strength of similar member with lateral ties.

38.4.1 The ratio of the volume of helical reinforcement to the volume of the core shall not be less than:

$$0.36\left(A_g / A_c - 1\right) f_{ck} / f_y$$

where

A_g = gross area of the section,

A_c = area of the core of the helically reinforced column measured to the outside diameter of the helix,

f_{ck} = characteristic compressive strength of the concrete, and

f_y = characteristic strength of the helical reinforcement but not exceeding 415 N/mm².

38.5 Members Subjected to Combined Axial Load and Uniaxial Bending

A member subjected to axial force and uniaxial bending shall be designed on the basis of **38.1** and **38.2**.

NOTE — The design of member subjected to combined axial load and uniaxial bending will involve lengthy calculation by trial and error. In order to overcome these difficulties interaction diagrams may be used.

38.6 Members Subjected to Combined Axial Load and Biaxial Bending

The resistance of a member subjected to axial force and biaxial bending shall be obtained on the basis of assumptions given in **38.1** and **38.2** with neutral axis so chosen as to satisfy the equilibrium of load and moments about two axes. Alternatively, such members may be designed by the following equation:

$$\left[\frac{M_{ux}}{M_{ux1}}\right]^{\alpha_n} + \left[\frac{M_{uy}}{M_{uy1}}\right]^{\alpha_n} \leq 1.0$$

where

M_{ux}, M_{uy} = moments about x and y axes due to design loads;

M_{ux1}, M_{uy1} = maximum uniaxial moment capacity for an axial load of P_u, bending about x and y axes, respectively; and

α_n is related to P_u/P_{uz}

where

$$P_{uz} = 0.45 f_{ck} \cdot A_c + 0.75 f_y \cdot A_{sc}$$

For values of P_u/P_{uz} = 0.2 to 0.8, the values of α_n vary linearly from 1.0 to 2.0. For values less than 0.2, α_n is 1.0; for values greater than 0.8, α_n is 2.0.

38.7 Slender Compression Members

The design of slender compression members (*see* **24.1.1**) shall be based on the forces and the moments determined from an analysis of the structure, including the effect of deflections on moments and forces. When the effect of deflections are not taken into account in the analysis, additional moment given in **38.7.1** shall be taken into account in the appropriate direction.

38.7.1 The additional moments M_{ax} and M_{ay} shall be calculated by the following formulae:

$$M_{ax} = \frac{P_u D}{2\,000}\left[\frac{l_{ex}}{D}\right]^2$$

$$M_{ay} = \frac{P_u b}{2\,000}\left[\frac{l_{ey}}{b}\right]^2$$

where

P_u = axial load on the member,

l_{ex} = effective length in respect of the major axis,

l_{ey} = effective length in respect of the minor axis,

D = depth of the cross-section at right angles to the major axis, and

b = width of the member.

For design of section, **38.5** or **38.6** as appropriate shall apply.

NOTES

1 A column may be considered braced in a given plane if lateral stability to the structure as a whole is provided by walls or bracing or buttressing designed to resist all lateral forces in that plane. It should otherwise be considered as unbraced.

2 In the case of a braced column without any transverse loads occurring in its height, the additional moment shall be added to an initial moment equal to sum of 0.4 M_{u1} and 0.6 M_{u2} where M_{u2} is the larger end moment and M_{u1} is the smaller end moment (assumed negative if the column is bent in double curvature). In no case shall the initial moment be less than 0.4 M_{u2} nor the total moment including the initial moment be less than M_{u2}. For unbraced columns, the additional moment shall be added to the end moments.

3 Unbraced compression members, at any given level or storey, subject to lateral load are usually constrained to deflect equally. In such cases slenderness ratio for each column may be taken as the average for all columns acting in the same direction.

38.7.1.1 The values given by equation **38.7.1** may be multiplied by the following factor:

$$k = \frac{P_{uz} - P_u}{P_{uz} - P_b} \leq 1$$

where

P_u = axial load on compression member,

P_{uz} = as defined in **38.6**, and

P_b = axial load corresponding to the condition of maximum compressive strain of 0.003 5 in concrete and tensile strain of 0.002 in outer most layer of tension steel.

39 LIMIT STATE OF COLLAPSE: SHEAR

39.1 Nominal Shear Stress

The nominal shear stress, t_v, in beams of uniform depth shall be obtained by the following equation:

$$\tau_v = \frac{V_u}{bd}$$

where

V_u = shear force due to design loads;

b = breadth of the member, which for flanged section shall be taken as the breadth of the web, b_w; and

d = effective depth.

39.1.1 *Beams of Varying Depth*

In the case of beams of varying depth the equation shall be modified as:

$$\tau_v = \frac{V_u \pm \dfrac{M_u}{d}\tan\beta}{bd}$$

where

τ_v, V_u, b and d are the same as in **39.1**,

M_u = bending moment at the section, and

β = angle between the top and the bottom edges of the beam.

The negative sign in the formula applies when the bending moment M_u increases numerically in the same direction as the effective depth d increases, and the positive sign when the moment decreases numerically in this direction.

39.2 Design Shear Strength of Concrete

39.2.1 The design shear strength of concrete in beams without shear reinforcement is given in Table 19.

Table 19 Design Shear Strength of Concrete, τ_c, N/mm²

(*Clauses* 39.2.1, 39.2.2, 39.3, 39.4, 39.5.3, 40.3.2, 40.3.3 *and* 40.4.3)

Sl No.	$100\frac{A_g}{bd}$	Concrete Grade					
		M 15	M 20	M 25	M 30	M 35	M 40 and Above
(1)	(2)	(3)	(4)	(5)	(6)	(7)	(8)
i)	≤ 0.15	0.28	0.28	0.29	0.29	0.29	0.30
ii)	0.25	0.35	0.36	0.36	0.37	0.37	0.38
iii)	0.50	0.46	0.48	0.49	0.50	0.50	0.51
iv)	0.75	0.54	0.56	0.57	0.59	0.59	0.60
v)	1.00	0.60	0.62	0.64	0.66	0.67	0.68
vi)	1.25	0.64	0.67	0.70	0.71	0.73	0.74
vii)	1.50	0.68	0.72	0.74	0.76	0.78	0.79
viii)	1.75	0.71	0.75	0.78	0.80	0.82	0.84
ix)	2.00	0.71	0.79	0.82	0.84	0.86	0.88
x)	2.25	0.71	0.81	0.85	0.88	0.90	0.92
xi)	2.50	0.71	0.82	0.88	0.91	0.93	0.95
xii)	2.75	0.71	0.82	0.90	0.94	0.96	0.98
xiii)	3.00 and above	0.71	0.82	0.92	0.96	0.99	1.01

NOTE — The term A_g is the area of longitudinal tension reinforcement which continues at least one effective depth beyond the section being considered except at support where the full area of tension reinforcement may be used provided the detailing conforms to **25.2.2** and **25.2.3**.

39.2.1.1 For solid slabs, the design shear strength for concrete shall be $\tau_c k$, where k has the values given below:

Overall Depth of Slab mm	300 or more	275	250	225	200	175	150 or less
k	1.00	1.05	1.10	1.15	1.20	1.25	1.30

NOTE — This provision shall not apply to flat slabs for which **30.6** shall apply.

39.2.2 *Shear Strength of Members Under Axial Compression*

For members subjected to axial compression P_u, the design shear strength of concrete, given in Table 19, shall be multiplied by the following factor:

$$\delta = 1 + \frac{3P_u}{A_g f_{ck}} \text{ but not exceeding } 1.5$$

where

P_u = axial compressive force, in N;

A_g = gross area of the concrete section, in mm²; and

f_{ck} = characteristic compressive strength of concrete.

Table 20 Maximum Shear Stress, τ_{cmax}, N/mm²

(*Clauses* 39.2.3, 39.2.3.1, 39.5.1 *and* 40.3.1)

Concrete Grade	M 15	M 20	M 25	M 30	M 35	M 40 and Above
$\tau_{c\,max}$, N/mm²	2.5	2.8	3.1	3.5	3.7	4.0

39.2.3 *With Shear Reinforcement*

Under no circumstances, even with shear reinforcement, shall be nominal shear stress in beams τ_v exceed $\tau_{c\,max}$ given in Table 20.

39.2.3.1 For solid slabs, the nominal shear stress shall not exceed half the appropriate values given in Table 20.

Maximum shear stress, τ_{cmax} given in Table 20 is valid for all load cases including earthquake except the following:

a) For coupled beams only, under earthquake forces, the limiting value of τ_{cmax} given in Table 20 shall be superseded by **F-9.**

b) Coupled shear walls shall be connected by ductile coupling beams. If the earthquake induced shear stress in the coupling beam exceeds,

$$\frac{0.1\, l_2 \sqrt{f_{ck}}}{D}$$

where l_s is the clear span of the coupling beam and D is its overall depth, the entire earthquake induced shear and flexure shall, preferably, be resisted by diagonal reinforcement.

The area of reinforcement to be provided along each diagonal in a diagonally reinforced coupling beam shall be,

$$A_{sd} = \frac{V_u}{1.74 f_y \sin\alpha}$$

where V_u is the factored shear force and α is the angle made by the diagonal reinforcement with the horizontal. At least 4 bars of 8 mm diameter shall be provided along each diagonal. The reinforcement along each diagonal shall be enclosed by special confining reinforcement, as per **F-7**. The pitch of spiral or spacing of ties shall not exceed 100 mm.

The diagonal or horizontal bars of a coupling beam shall be anchored in the adjacent walls with an anchorage length of 1.5 times the development length in tension.

39.3 Minimum Shear Reinforcement

When τ_v is less than τ_c given in Table 19, minimum shear reinforcement shall be provided in accordance with **25.5.1.6**.

39.4 Design of Shear Reinforcement

When τ_v exceeds τ_c given in Table 19, shear reinforcement shall be provided in any of the following forms:

a) Vertical stirrups,
b) Bent-up bars along with stirrups, and
c) Inclined stirrups

Where bent-up bars are provided, their contribution towards shear resistance shall not be more than half that of the total shear reinforcement.

Shear reinforcement shall be provided to carry a shear equal to $V_u - \tau_c bd$. The strength of shear reinforcement V_{us} shall be calculated as below:

1) For vertical stirrups:

$$V_{us} = \frac{0.87 f_y A_{sv} d}{S_v}$$

2) For inclined stirrups or a series of bars bent-up at different cross-sections:

$$V_{us} = \frac{0.87 f_y A_{sv} d}{S_v}(\sin\alpha + \cos\alpha)$$

3) For single bar or single group of parallel bars, all bent-up at the same cross-section:

$$V_{us} = 0.87 f_y A_{sv} \sin\alpha$$

where

A_{sv} = total cross-sectional area of stirrup legs or bent-up bars within a distance s_v,

s_v = spacing of the stirrups or bent-up bars along with the length of the member,

τ_v = nominal shear stress,

τ_c = design shear strength of the concrete,

b = breadth of the member which for flanged beams, shall be taken as the breadth of the web b_w,

f_y = characteristic strength of the stirrup or bent-up reinforcement which shall not be taken greater than 415 N/mm^2,

α = angle between the inclined stirrup or bent-up bar and the axis of the member, not less than 45°, and

d = effective depth.

NOTES

1 Where more than one type of shear reinforcement is used to reinforce the same portion of the beam, the total shear resistance shall be computed as the sum of the resistance for the various types separately.

2 The area of the stirrups shall not be less than the minimum specified in **25.5.1.6**.

39.5 Enhanced Shear Strength of Sections Close to Supports

39.5.1 *General*

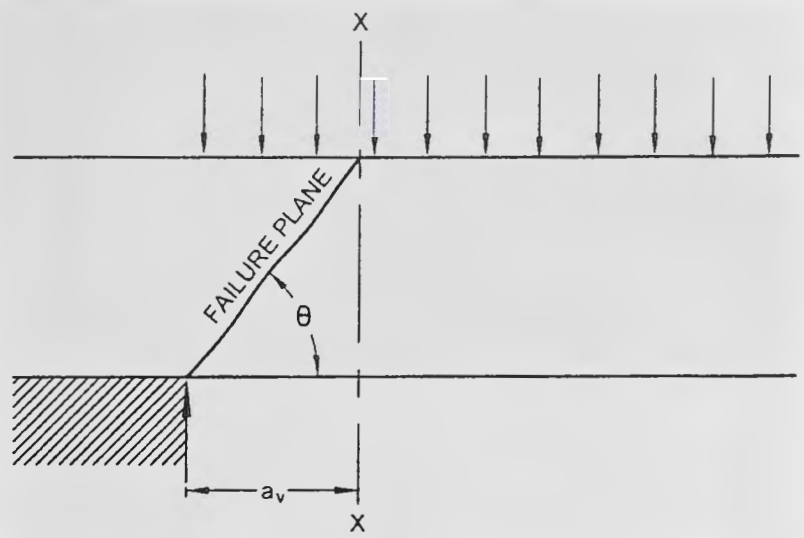

NOTE — The shear causing failure is that acting on section X-X.

FIG. 24 SHEAR FAILURE NEAR SUPPORTS

Shear failure at sections of beams and cantilevers without shear reinforcement will normally occur on plane inclined at an angle 30° to the horizontal. If the angle of failure plane is forced to be inclined more steeply than this [because the section considered ($X-X$) in Fig. 24 is close to a support or for other reasons], the shear force required to produce failure is increased.

The enhancement of shear strength may be taken into account in the design of sections near a support by increasing design shear strength of concrete to $2d\ \tau_c/a_v$ provided that design shear stress at the face of the support remains less than the values given in Table 20. Account may be taken of the enhancement in any situation where the section considered is closer to the face of a support or concentrated load than twice the effective depth, d. To be effective, tension reinforcement should extend on each side of the point where it is intersected by a possible failure plane for a distance at least equal to the effective depth, or be provided with an equivalent anchorage.

39.5.2 *Shear Reinforcement for Sections Close to Supports*

If shear reinforcement is required, the total area of this is given by:

$$\sum A_{sv} = a_v b(\tau_v - 2d\,\tau_c/a_v)/0.87 f_y \geq 0.4 a_v b/0.87 f_y$$

This reinforcement should be provided within the middle three quarters of a_v, where a_v is less than d, horizontal shear reinforcement will be effective than vertical.

39.5.3 *Enhanced Shear Strength Near Supports (Simplified Approach)*

The procedure given in **39.5.1** and **39.5.2** may be used for all beams. However, for beams carrying generally uniform load or where the principal load is located farther than $2d$ from the face of support, the shear stress

may be calculated at a section a distance d from the face of support. The value of τ_c is calculated in accordance with Table 19 and appropriate shear reinforcement is provided at sections closer to the support, no further check for shear at such sections is required.

40 LIMIT STATE OF COLLAPSE: TORSION

40.1 General

In structures, where torsion is required to maintain equilibrium, members shall be designed for torsion in accordance with **40.2** to **40.4**. However, for such indeterminate structures where torsion can be eliminated by releasing redundant restraints, no specific design for torsion is necessary, provided torsional stiffness is neglected in the calculation of internal forces. Adequate control of any torsional cracking is provided by the shear reinforcement as per **39**.

NOTE — The approach to design in this clause is as follows: Torsional reinforcement is not calculated separately from that required for bending and shear. Instead the total longitudinal reinforcement is determined for a fictitious bending moment which is a function of actual bending moment and torsion; similarly web reinforcement is determined for a fictitious shear which is a function of actual shear and torsion.

40.1.1 The design rules laid down in **40.3** and **40.4** shall apply to beams of solid rectangular cross-section. However, these clauses may also be applied to flanged beams, by substituting b_w for b in which case they are generally conservative; therefore specialist literature may be referred to.

40.2 Critical Section

Sections located less than a distance d, from the face of the support may be designed for the same torsion as computed at a distance d, where d is the effective depth.

40.3 Shear and Torsion

40.3.1 *Equivalent Shear*

Equivalent shear V_e, shall be calculated from the formula:

$$V_e = V_u + 1.6\frac{T_u}{b}$$

where

V_e = equivalent shear,
V_u = shear,
T_u = torsional moment, and
b = breadth of beam.

The equivalent nominal shear stress τ_{ve} in this case shall be calculated as given in **39.1**, except for substituting V_u by V_e. The values of τ_{ve} shall not exceed the values of $\tau_{c\,max}$ given in Table 20.

40.3.2 If the equivalent nominal shear stress τ_{ve} does not exceed τ_c given in Table 19, minimum shear reinforcement shall be provided as per **25.5.1.6**.

40.3.3 If τ_{ve} exceeds τ_c given in Table 19, both longitudinal and transverse reinforcement shall be provided in accordance with **40.4**.

40.4 Reinforcement in Members Subjected to Torsion

40.4.1 Reinforcement for torsion, when required, shall consist of longitudinal and transverse reinforcement.

40.4.2 *Longitudinal Reinforcement*

The longitudinal reinforcement shall be designed to resist an equivalent bending moment, M_{e1}, given by:

$$M_{e1} = M_u + M_t$$

where

M_u = bending moment at the cross-section, and

$$M_t = T_u \frac{(1 + D/b)}{1.7}$$

where

T_u is the torsional moment, D is the overall depth of the beam and b is the breadth of the beam.

40.4.2.1 If the numerical value of M_t as defined in **40.4.2** exceeds the numerical value of the moment M_u, longitudinal reinforcement shall be provided on the flexural compression face, such that the beam can also withstand an equivalent M_{e2} given by $M_{e2} = M_t - M_u$, the moment M_{e2} being taken as acting in the opposite sense to the moment M_u.

40.4.3 *Transverse Reinforcement*

Two legged closed hoops enclosing the corner longitudinal bars shall have an area of cross-section A_{sv}, given by:

$$A_{sv} = \frac{T_u s_v}{b_1 d_1 (0.87 f_y)} + \frac{V_u s_v}{2.5 d_1 (0.87 f_y)}$$

but the total transverse reinforcement shall not be less than

$$\frac{(\tau_{ve} - \tau_c) b . s_v}{(0.87 f_y)}$$

where

T_u = torsional moment,
V_u = shear force,
s_v = spacing of the stirrup reinforcement,
b_1 = centre-to-centre distance between corner bars in the direction of the width,
d_1 = centre-to-centre distance between corner bars,

b = breadth of the member,

f_y = characteristic strength of the stirrup reinforcement,

τ_{ve} = equivalent shear stress as specified in **40.3.1**, and

τ_c = shear strength of the concrete as per Table 19.

41 LIMIT STATE OF SERVICEABILITY: DEFLECTION

41.1 Flexural Members

In all normal cases, the deflection of a flexural member will not be excessive if the ratio of its span to its effective depth is not greater than appropriate ratios given in **22.2.1**. When deflections are calculated according to Annex C, they shall not exceed the permissible values given in **22.2**.

42 LIMIT STATE OF SERVICEABILITY: CRACKING

42.1 Flexural Members

In general, compliance with the spacing requirements of reinforcement given in **25.3.2** should be sufficient to control flexural cracking. If greater spacing are required, the expected crack width should be checked by formula given in Annex G.

42.2 Compression Members

Cracks due to bending in a compression member subjected to a design axial load greater than $0.2f_{ck}A_c$, where f_{ck} is the characteristic compressive strength of concrete and A_c is the area of the gross section of the member, need not be checked. A member subjected to lesser load than $0.2f_{ck}A_c$ may be considered as flexural member for the purpose of crack control (*see* **42.1**).

ANNEX A

(*Clause* 16B.2.4.1)

DESIGN OF STEEL FIBRE REINFORCED CONCRETE

A-1 GENERAL

This annex shall apply where steel fibres are used to improve the performance and capacity of reinforced and prestressed concrete structures.

The design of steel fibre reinforced concrete (SFRC) at both the ultimate and serviceability limit states shall be based on the stress (σ) ≠ strain (ε) relationships for SFRC as specified in **A-3.3** (*see* Note 1).

Steel fibres shall not be relied upon in plastic hinge regions for strength requirements (*see* Note 2).

Steel fibres shall not be relied upon at constructions joints for either serviceability or strength requirements. Design procedure in this clause is for steel-fibre-reinforced concrete with a softening classification only (*see* Fig. 25). Hardening SFRC and the use of synthetic fibres is beyond the scope of this annex.

NOTES

1 When using brittle fibres that rely on a fibre pullout failure mechanism to obtain member ductility, care is required for cases where a significant number of fibres fracture or where fibres result in local crushing of the concrete due to the local forces imposed on the matrix by the fibres. Fibre fracture may occur where the bond between the fibre and the matrix is high, and this is more likely in a high strength concrete combined with fibres of high bond capacity and of lower strength steels.

2 The anchorage capacity of steel fibres may be lost in areas where crack widths exceed about 3.5 mm. Cracking of this magnitude can be expected in regions where plastic rotations are expected.

A-2 DEFINITIONS

For the purpose of this annex the following definitions shall apply.

A-2.1 Crack Mouth Opening Displacement (CMOD) — The width of a crack shall be measured at its mouth in a flexural tensile test. To measure the CMOD, a displacement transducer/clip gauge shall be mounted along the longitudinal axis at the mid width of the test specimen (beam with nominal size of 150 mm × 150 mm and length L so that 550 mm < L < 700 mm).

A-2.2 Crack Opening Displacement (COD) — The width of a single localized crack, taken as an average on four sides, for a direct tensile test on a strain softening SFRC dog-bone shaped specimen in accordance with **A-3.3.7**.

A-2.3 Steel Fibre Reinforced Concrete (SFRC) — A mixture of concrete and steel fibres.

A-2.4 Hardening Behaviour — A material that displays an enhanced strength with increasing crack widths beyond that measured at the point of initial cracking of the cementitious matrix.

A-2.5 Softening Behaviour A material that exhibits a loss of strength upon cracking.

A-2.6 Target Dosage — The specified quantity of fibres in kilograms per cubic metre of concrete (kg/m^3).

A-3 PROPERTIES OF SFRC

A-3.1 General

SFRC shall be classified in terms of both its characteristic compressive (cylinder) strength (f'_c) (*see* **A-3.2**) and its characteristic residual tensile strength ($f'_{1.5}$) (*see* **A-3.3.3**).

A-3.2 Compressive Strength

The characteristic compressive strength of SFRC at 28 days (f'_c) shall be determined in accordance with good practice [6-5A(14)].

In the absence of more accurate data, the mean value of the in situ compressive strength (f_{cmi}) shall be taken as 90 percent of the mean value of the cylinder strength (f_{cm}).

NOTE — The compressive strength of steel fibre reinforced concrete (SFRC) should be determined by means of standard tests on concrete cylinders. The addition of steel fibres to concrete in conventional dosages (less than 100 kg/m^3) does not change the compressive properties of the concrete.

A-3.3 Tensile Properties

A-3.3.1 *Classification*

SFRC shall be classified as either softening or hardening as shown in Fig. 25. Hardening SFRC is outside the scope of this annex.

NOTES

1 A hardening material is defined as one with a tensile strength equal to or greater than 1.1 times the strength of the matrix without fibres and taken at a crack opening displacement (COD) of equal to or greater than 0.3 mm.

2 A hardening material is one where multiple cracks can occur prior to crack localization. For material hardening to occur, the fibre dosage is typically such that the strength of the SFRC is at least 10 percent greater than the strength of the same concrete mix without fibres. The value of COD of 0.3 is sufficiently high such that matrix contribution to the strength of the composite is minimal and the tension at this point is substantially taken by the fibres alone. Hardening SFRC is outside of the scope of this annex.

A-3.3.2 *Matrix Tensile Strength*

The matrix tensile strength of the softening SFRC (f_{ct}) shall be obtained using flexural tensile testing, in accordance with good practice [6-5A(14)].

When only the characteristic compressive (cylinder) strength (f'_c) has been determined, the mean and characteristic flexural tensile strength of SFRC shall be calculated in accordance with **5.2.2**.

NOTE — For strain softening SFRC, the peak strength of the composite may be approximated as the strength of the concrete mix without fibres.

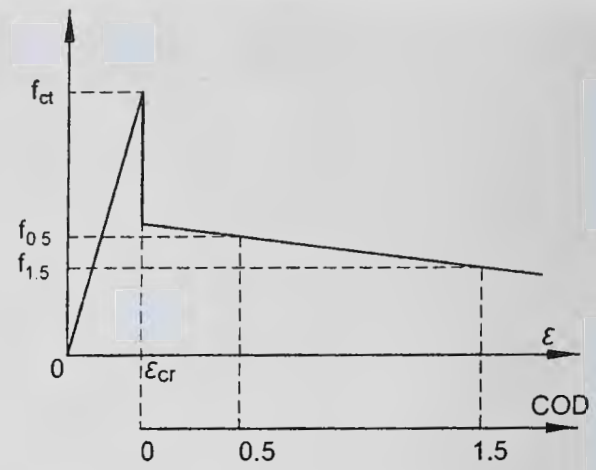

25A STRAIN SOFTENING SFRC

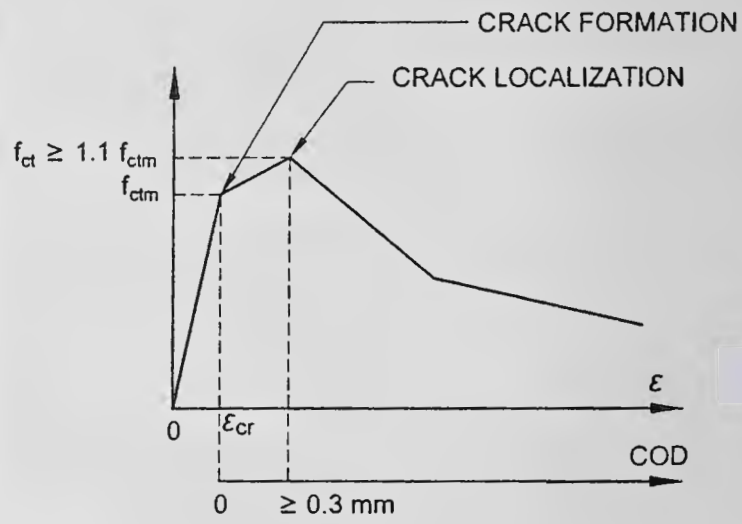

25B STRAIN HARDENING SFRC

FIG. 25 CLASSIFICATION OF SFRC

A-3.3.3 *Residual Tensile Strength*

The standard characteristic residual tensile strength grades ($f'_{1.5}$) are 0.4 MPa, 0.6 MPa, 0.8 MPa, 1.2 MPa, 1.6 MPa and 2.0 MPa.

The characteristic residual tensile strengths of concrete at 28 days ($f'_{1.5}$) shall be determined statistically from tests carried out in accordance **A-3.3.4** or **A-3.3.5.**

NOTE — The characteristic residual tensile strength depends on the fibre-matrix bond strength, which is usually a function of the compressive strength of the parent concrete, as well as the fibre content. It may be unrealistic to specify a high value of $f'_{1.5}$ when using a relatively low value of f'_c.

A-3.3.4 *Determination of Strength by Direct Testing*

The characteristic residual tensile strength ($f'_{1.5}$) shall be obtained using direct tensile tests as specified in **A-3.3.7**.

Alternatively, where matched direct and indirect testing has been undertaken in accordance with **A-3.3.6** for similar SFRC mixtures, the characteristic residual tensile may be determined as:

$$f'_{1.5} = k_{R,4} f'_{R,4}$$

Where $f'_{R,4}$ is determined in accordance with **A-3.3.8** and calculated statistically, and the factor $k_{R,4}$ determined from **A-3.3.6**.

For the purposes of this clause, similar SFRC mixtures are defined as having the same,

a) fibre type and content,
b) water to cementitious material ratio,
c) maximum aggregate particle size, and
d) compressive strength (f'_c).

NOTES

1 In calculating the characteristic strength, the population may be treated normally distributed and the strength determined in accordance with accepted standard. A confidence level of 75 percent shall be used such that 95 percent of the population exceeds the characteristic value.

2 The sample standard deviation shall not exceed 25 percent.

A-3.3.5 *Determination of Strength by Indirect Testing*

The characteristic residual tensile strength ($f'_{1.5}$) may be obtained using indirect tests as specified in **A-3.3.8** and calculated as:

$$f'_{1.5} = 0.4f'_{R,4} - 0.07f'_{R,2}$$

A-3.3.6 *Residual Tensile Strength-Residual Flexural Strength Relationship*

The relationship between residual tensile strength and the residual flexural strength shall be obtained by matched using the same SFRC mixture. Residual tensile strength specimens shall be prepared and tested in accordance with **A-3.3.7**. Residual flexural tensile tests shall be in accordance with the procedure as mentioned below:

The average width of the specimen and distance between the tip of the notch and the top of the specimen in the mid-span section shall be determined from two measurement to nearest 0.1 mm width and distance in the notch port of the specimen using calipers.

When the CMOD is measured, the displacement transducer shall be mounted along the longitudinal axis at mid width of test specimen such that the distance 'y' between the bottom of specimen and line of measurement is 5 mm or less as mentioned in Fig. 26.

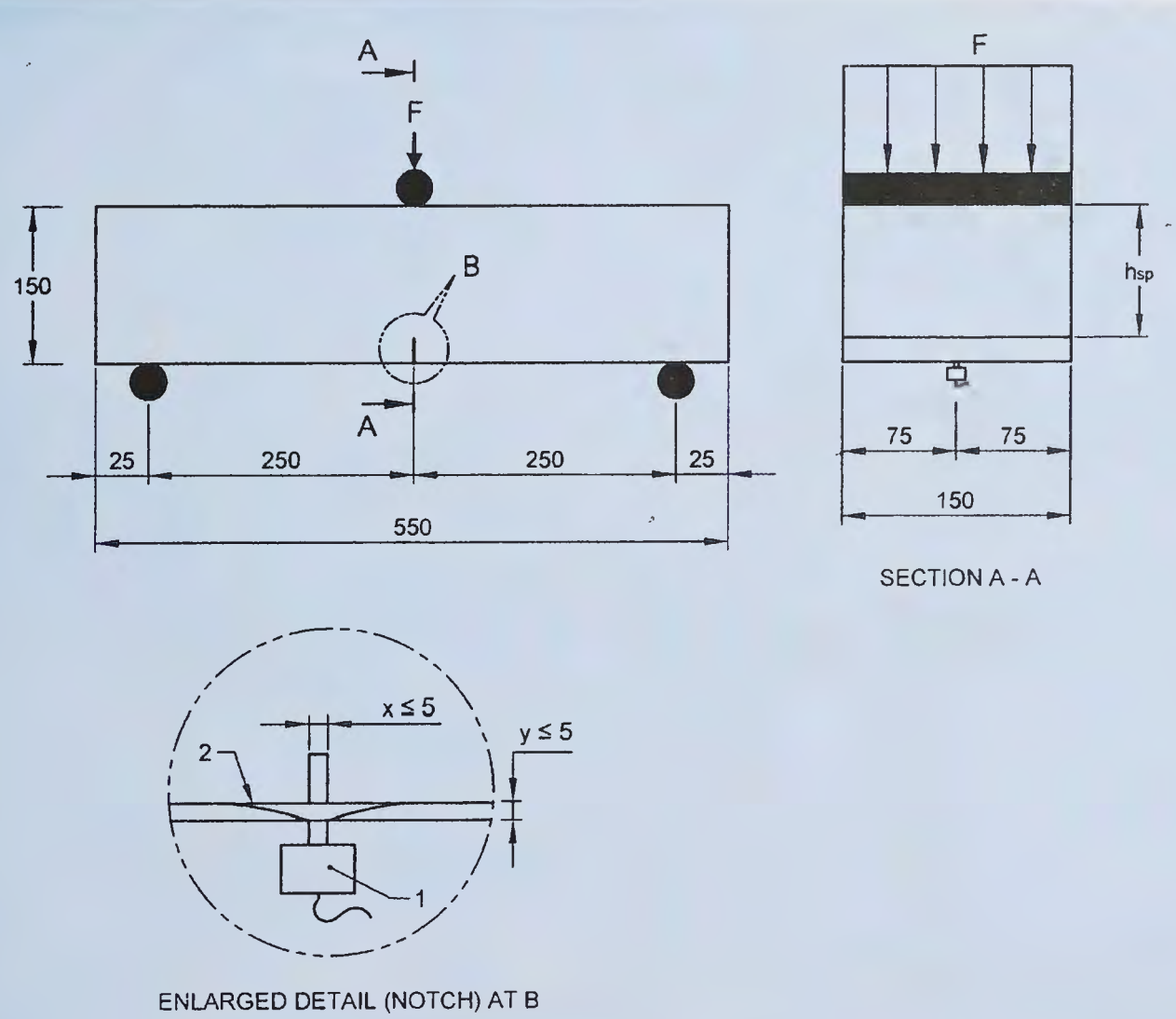

LEGEND

1 TRANSDUCER (CLIP GAUGE)

2 KNIFE EDGE

All dimensions in millimetres.

FIG. 26 ARRANGEMENT FOR RESIDUAL FLEXURAL TENSILE TEST

a) The concrete mix shall be batched to ensure a uniform distribution of fibres, the SFRC shall be placed in the moulds in a manner that does not interfere with the distribution of the fibres and, the SFRC shall be compacted using lightly applied external vibration; and

b) A minimum of 12 specimens shall be tested.

The reference factor $k_{R,4}$ shall be determined as:

$$k_{R,4} = f_{1.5m}/f_{R,4m}$$

where

$f_{1.5m}$ = mean residual tensile strengths corresponding to a COD of 1.5 mm, determined in accordance with **A-3.3.7**.

$f_{R,4m}$ = mean residual flexural tensile strengths corresponding to a CMOD of 3.5 mm, determined in accordance with **A-3.3.8**.

NOTE — The residual tensile strength (as obtained from a direct tensile test) is a fundamental material property of SFRC. This clause allows the concrete producer and steel fibre manufacturer to correlate the direct tensile strength of their particular SFRC mix design with the flexural tensile strength.

A-3.3.7 *Residual Tensile Strength Test*

The residual tensile strength shall be obtained using the testing arrangement shown in Fig. 27 and with the following criteria:

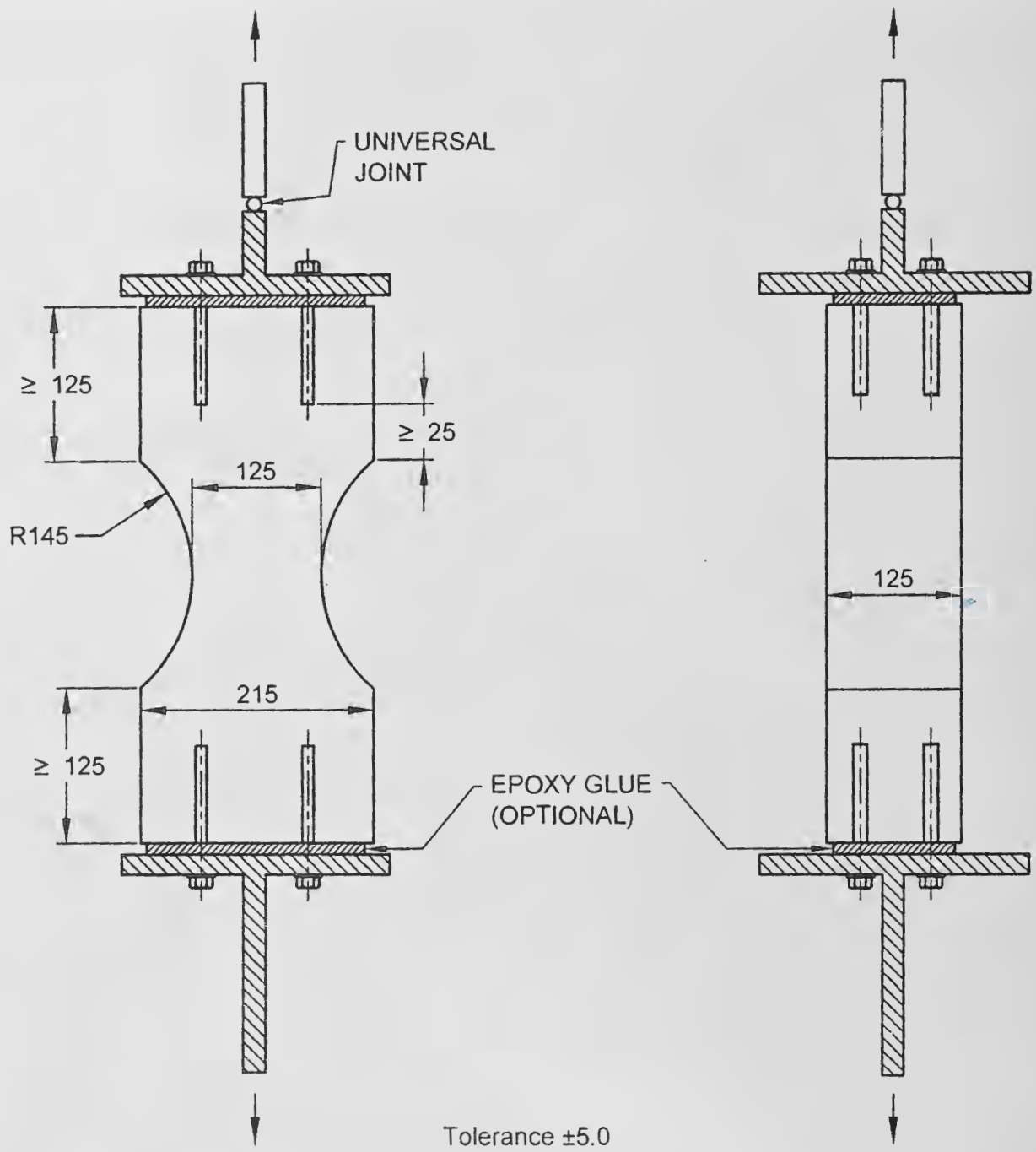

NOTE — There is considerable discussion in the literature on whether the ends of the specimens should be fixed at each end, pinned at each end or fixed at one end and pinned at the other. The adoption of one pinned and one fixed end is a pragmatic decision between the ideal condition (fixed at each end) and limitations in manufacturing of specimens that are perfectly square at their ends for alignment within the testing machine. With both ends fixed any misalignment induces a moment in the specimen during gripping. This moment can induce a tensile stress on one side of the specimen, weakening the specimen. In some situations, the moment induced may be sufficient to crack the concrete. The inclusion of the universal joint at one end eliminates residual tensions that may result from the gripping procedure.

FIG. 27 TESTING ARRANGEMENT FOR DIRECT TENSION

a) The critical section shall be where the cross-sectional area is a minimum.

b) The SFRC mix shall be batched to ensure a uniform distribution of fibres, and shall be placed in the moulds in a manner that does not interfere with the distribution of the fibres. The SFRC shall be compacted using lightly applied external vibration.

c) The specimen shall be connected to the testing machine in such a manner that the machine does not apply a load to the specimen during the process of tightening of the grips and prior to testing.

d) One end of the specimen shall be connected to the testing machine through a universal joint such that no moment is applied to the end of the specimen.

e) Displacement measurements shall be taken on each of the four sides with the COD taken as the average of these measurements.

f) A minimum of twelve specimens shall be tested.

g) Tests where the failure of the specimen is outside of the testing region, or where the results are influenced by the test specimen boundaries, shall be retested.

h) The characteristic values of the tensile strength $f_{0.5}$ and $f_{1.5}$, corresponding to CODs of 0.5 mm and 1.5 mm, respectively, shall be determined statistically as the 95 percentile confidence value assuming the population is normally distributed.

j) The mean values of $f_{0.5m}$ and $f_{1.5m}$, corresponding to CODs of 0.5 mm and 1.5 mm, respectively, shall be determined statistically as the 50th percentile confidence value assuming the population is normally distributed.

The stress results obtained from the test shall be multiplied by the three-dimensional orientation factor k_1, where.

$$k_1 = \frac{1}{0.94 + 0.6\ell_f/b} \leq 1$$

And ℓ_f is the length and b is taken as the average of the width and depth of the specimen taken at the critical section.

NOTE — The factor k_1 removes the influence of the boundaries on the fibre distribution and converts the results of the test to a state where the fibres can be considered to be randomly orientated in three-dimensional space.

A-3.3.8 *Residual Flexural Tensile Strength*

The residual flexural tensile strength $f_{R,j}$ shall be determined from 3 point notched bending tests on 150 mm square section prisms. The notch depth shall be 25 mm and the test conducted in accordance with **A-3.3.6.** The force F shall be plotted against the crack mouth opening displacement (CMOD), as shown in Fig. 28, and the residual flexural stress calculated as:

$$\frac{3F_j L}{2bh_{sp}^2}$$

where

b = width of the specimen, in mm;

h_{sp} = distance between tip of the notch and top of cross-section, in mm;

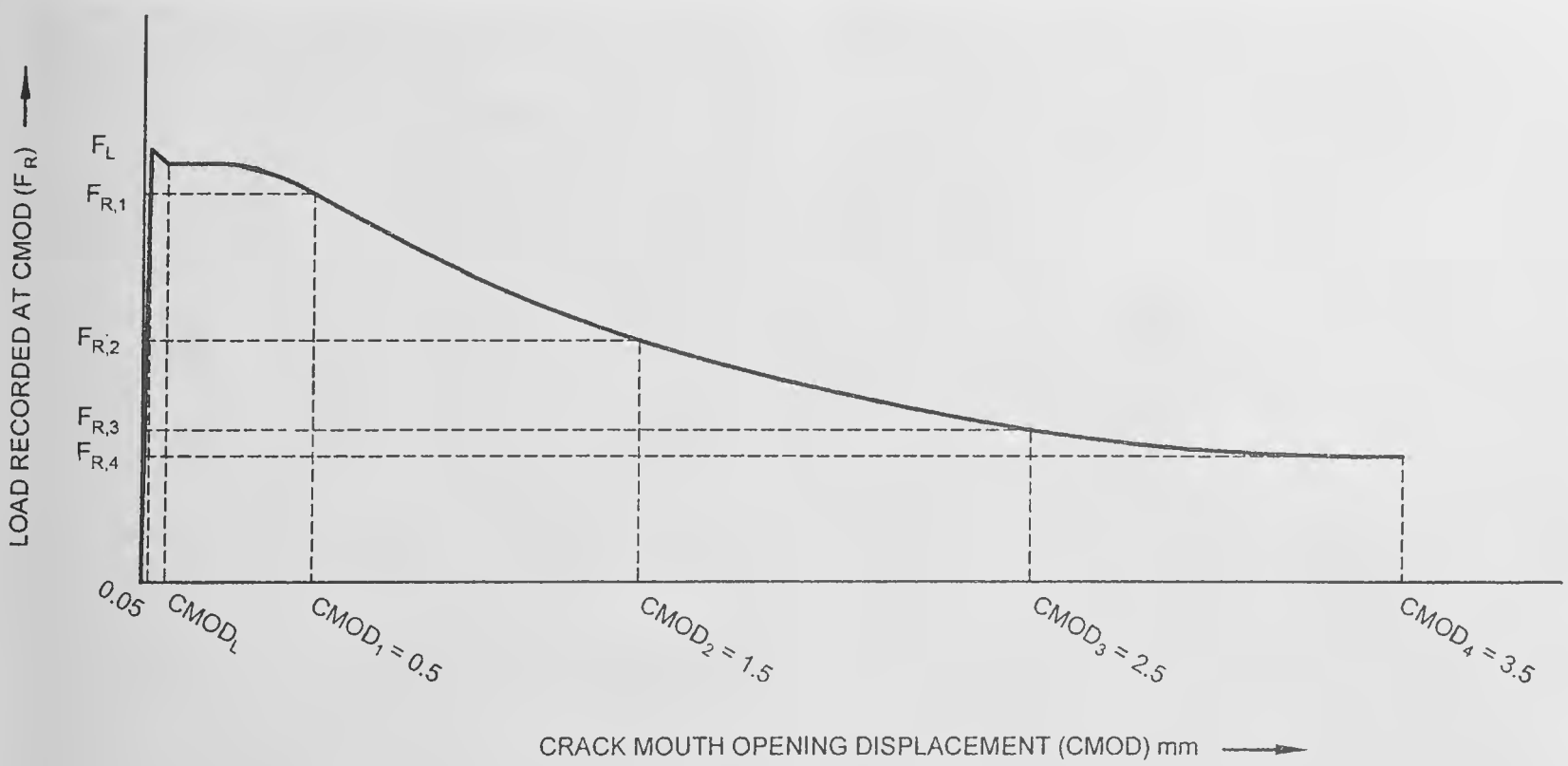

FIG. 28 LOAD *VERSUS* CMOD FOR RESIDUAL FLEXURAL TENSION

L = span, in mm; and

F_{Rj} = load recorded at $CMOD_j$ (*see* Fig. 28).

A-3.4 Modulus of Elasticity

The mean modulus of elasticity at the appropriate age (E_{cj}) shall be determined in accordance with good practice [6-5A(14)].

NOTE — The addition of steel fibres to concrete in conventional dosages (100 kg/m³ and less) does not change the elastic modulus of the concrete.

A-4 DESIGN OF REINFORCED SFRC MEMBERS

A-4.1 General

This clause applied to reinforced and prestressed beams subjected to any combination of shear force, bending moment and axial force. This clause does not apply when torsion acts in conjunction with shear or to non-flexural members.

A-4.2 Strength of Beams in Bending and Combined Bending and Axial Force

Calculations for strength of cross-sections in bending shall incorporate equilibrium and strain-compatibility considerations and be consistent with the following assumptions:

a) Plane sections normal to the axis shall remain plane after bending.

b) Stress in the fibre reinforced concrete in that part of the cross-section in tension shall be taken to be $f'_{1.5}$, where $f'_{1.5}$ is the characteristic residual tensile stress determined in accordance with **A-3.3.3**.

c) Distribution of compressive stress shall be determined from a stess-strain relationship for the concrete.

The strength of a section in bending, or in combined bending and axial force, shall be determined using rectangular stress blocks for the concrete in compression and concrete in tension, as shown in Fig. 29.

A-4.3 Minimum Reinforcement Requirements for Bending

The minimum tensile reinforcement shall be not less than that determined using the principles given in this annex, excluding fibres.

A-4.4 Strength of Beams in Shear

A-4.4.1 *Design Shear Strength of a Beam*

The design shear strength of a beam shall be takcn as ϕV_u

where

$$V_u = V_{uc} + V_{uf} + V_{us}$$

Where V_{uc} is determined from **39**, V_{us} is determincd from **39** and V_{ufc} is determined from **A-4.4.2**.

Notwithstanding the above equations, the fibres component to the shear strength of a beam, V_{uf}, shall not exceed the greater of $0.3V_u$ and that determined by **A-4.4.3** with V_{us} taken as zero.

A-4.4.2 *Contribution to Shear Strength by Steel Fibres*

The contribution of the fibres to the ultimate shear strength V_{uf} of an SFRC beam shall be calculated from the following equation:

$$V_{uf} = 0.7\, k_\theta b_v d_0 f'_{1.5}$$

where

$$k_\theta = \cos\theta_v \leq 1.28$$

θ_v = angle between the axis of the concrete compression strut and the longitudinal axis of the member and shall be taken as not less than 38°

A-4.4.3 *Minimum Shear Reinforcement*

The minimum contribution from the total of the transverse steel reinforcement and fibres shall satisfy the following:

$$(V_{us} + V_{uf})_{min} \geq 0.1 b_v d_0 \sqrt{f'_c} \text{ and} \geq 0.6 b_v d_0$$

A-4.5 Design for Serviceability Limit States

A-4.5.1 *General*

When an SRFC cross-sectional is uncracked, the full cross-section shall be assumed to be active and both concretc and steel are assumed to be elastic in tension as well as in compression.

When an SRFC cross-section is cracked, the SFRC shall be assumed to be elastic in compression, and capable of sustaining a tensile stress equal to $1.1 f'_{1.5}$.

NOTE — Prior to cracking, linear elastic behaviour is assumed for the SFRC, reinforcement and the bonded tendons in both tension and compression. After cracking, the SFRC in tension is assumed to carry a tensile stress of $1.1 f'_{1.5}$, while the SFRC in compression, the reinforcement and the bonded tendons are assumed to be linear elastic.

A-4.5.2 *Stress Limits*

A-4.5.2.1 *Concrete*

Thc maximum compressive stress in the concrete at the serviceability limit states shall not exceed $0.6 f_{cm}(t)$. Under permanent effect loading, the maximum compressive stress in the concrete shall not exceed $0.4 f_{cm}(t)$.

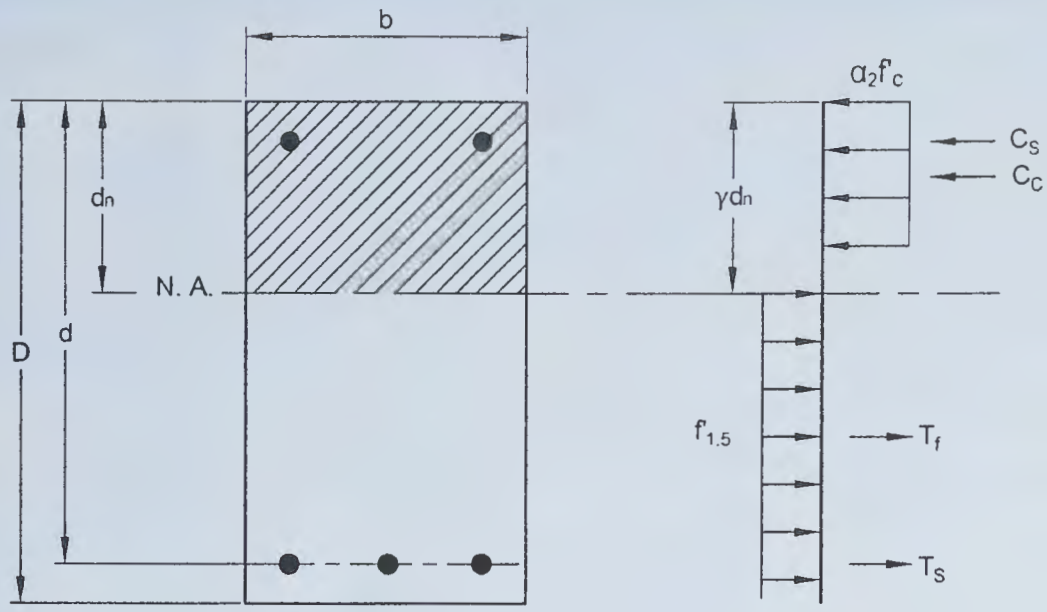

29A SINGLE TENSILE REINFORCEMENT LAYER

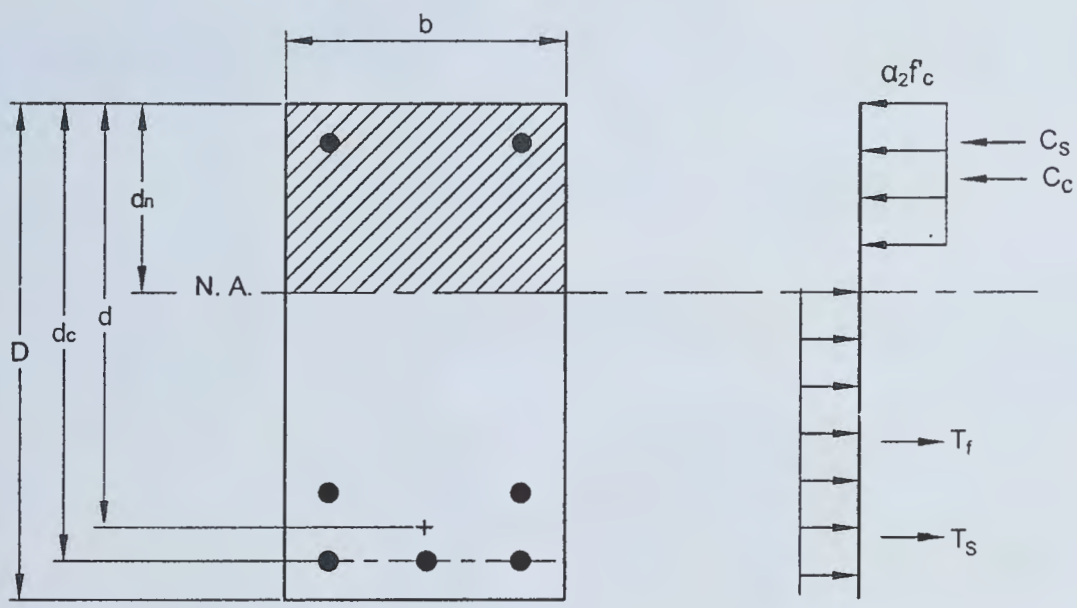

29B MULTIPLE TENSILE REINFORCEMENT LAYERS

FIG. 29 STRESS BLOCKS AND FORCES ON REINFORCED SFRC SECTION

NOTES

1 The satisfaction of limits on the concrete tensile stress at the serviceability limit state is not necessary if the member performance is satisfactory at the ultimate limit state.

2 Compressive stresses are limited to avoid large time-dependent deformations and to ensure creep behaviour remains linear with respect to stress. Restrictions on the tensile stress in SFRC are not necessary provided the member satisfies all other requirements at the strength and serviceability limit states.

A-4.5.2.2 *Reinforcing steel*

To avoid any inelastic deformation that could lead to large, permanently open cracks, tensile stresses in the reinforcement at the serviceability limit states shall not exceed $0.8f_{sy}$.

A-4.5.3 *Minimum Reinforcement for Crack Control*

The minimum amount of longitudinal reinforcement required to obtain controlled crack formation shall be:

$$A_{st,min} = k_1 k_c k_p f_{ct,ef} - 1.1 f'_{1.5} \frac{A_{ct}}{f_{s,max}} \geq 0.0 \text{ (mm}^2\text{)}$$

where

$A_{s,min}$ = minimum area of reinforcement required within the tensile zone (mm^2). If $Z_{st,min}$ is zero only steel fibres are necessary to control cracking.

A_{ct} = area of concrete within the tensile zone (mm^2). The tensile zone is that part of the cross-section calculated to be in tension just before formation of the first crack.

$f_{s,max}$ = maximum stress permitted in the reinforcement immediately after formation of the crack.

$f_{ct,ef}$ = tensile strength of the concrete effective at the time when the cracks may first be

expected to occur (MPa). Values of $f_{ct,ef}$ shall be obtained from $0.6\sqrt{f_{cm}}$ but not less than 3.0 MPa and f_{cm} is the mean concrete compressive strength at the time cracking is expected to occur.

k_c = coefficient that takes account of the nature of the stress distribution within the section immediately prior to cracking. The relevant stress distribution is that resulting from the combined effects of loading and restrained imposed deformations:

= 1.0 for pure tension ($e = M/N = 0$).

= 0.6 for pure bending.

k_1 = coefficient which allows for the effect of non-uniform self-equilibrating stresses due to non-linear shrinkage or temperature profiles through the member depth. In the absence of more detailed analysis, k_1 may be taken as 0.8.

k_p = a coefficient that takes account of the level of prestress and is given by:

$$k_p = 1 - \frac{\sigma_{cp}}{k k_c f_{ct,ef}}\left(1 - k_c + 2.4\frac{e}{D} - 6k_c\frac{e}{D}\right)$$

e/D = ratio of the eccentricity of the prestressing force on the cross-section, e, measured from the centroidal axis of the uncracked section to the overall depth of the cross-section, D.

σ_{cp} = average intensity of the effective prestress (P_e/A_g)

A-4.5.4 *Deflection Control*

A-4.5.4.1 *General*

The deflection of an SFRC member shall be calculated using the procedures outlined in **A-4.5.4.2** and **A-4.5.4.3**. Allowance shall be made for the expected load history, the expected construction procedure and any anticipated deflections resulting from deformation of forms or settlement of props.

A-4.5.4.2 *Short-term deflection*

The short-term deflections due to external loads and prestressing, which occur immediately on their application, shall be calculated using the value of E_{cj} determined in accordance with this annex and the value of the effective second moment of area of the member (I_{ef}). The value of I_{ef} may be determined from the values of I_{ef} at nominated cross-sections as follows:

a) For a simply supported span, the value at mid-span.

b) In a continuous beam,

1) For an interior span, half the mid-span value plus one quarter of each support value; or

2) For an end span, half the mid-span value plus half the value at the continuous support.

c) For a cantilever, the value at the support.

For the purpose of the above determinations, the value of I_{ef} at each of the cross-sections nominated in items (a) to (c) is obtained from the instantaneous curvature $k_i = M^*_s/(E_{cj}I_{cf})$ calculated as the slope of the strain diagram in Fig. 30B and obtained by satisfying the requirements for rotational and horizontal equilibrium of the stress distribution in Fig. 30C.

NOTE — The procedure for calculating short-term deflection is consistent with the approach in this annex. Short-term deflection of a cracked section is calculated based on the assumed stress and strain distribution shown in Fig. 30. The assumption of a uniform tensile stress in the cracked region of the SFRC is considered to be reasonable for the determination of the neutral axis location and curvature and, hence, for the determination of the effective second moment of area (I_{ef}).

A-4.5.4.3 *Long-term deflection*

For reinforced and prestressed SFRC flexural members, that part of the deflection that occurs after the short term deflection shall be calculated as the sum of,

a) the shrinkage component of the long-term deflection, determined from the design shrinkage strain of concrete (ε_{cs}) and the principles of mechanics; and

b) the additional long-term creep deflections, determined from the design creep coefficient of concrete (φ_{cc}) and the principles of mechanics.

In the absence of more accurate calculations, the additional long-term deflection of a reinforced SFRC beam due to creep and shrinkage may be calculated by multiplying the short-term deflection caused by the sustained loads by a multiplier, k_{cs}, as follows:

$$k_{cs} = \left[2 - 1.2\left(\frac{A_{sc}}{A_{st}}\right)\right] \geq 0.8$$

NOTE — For the calculation of long-term deflection, two alternative approaches are specified.

For reinforced and prestressed beams. the shrinkage and creep components of the long-term deflection may be calculated separately using the material data specified in the annex and the principles of mechanics. The shrinkage component of the long-term deflection may be readily determined from the shrinkage-induced curvatures calculated at the critical sections along the span of the beam using the design shrinkage strain, (ε_{cs}). The creep component of long-term deflection may be obtained from the creep-induced curvatures at the critical sections under the sustained service loads using the creep coefficient for concrete, (φ_{cc}).

Alternatively, for reinforced concrete beams and slabs, the additional long-term deflection caused by creep and shrinkage may be approximated by multiplying the short-term or

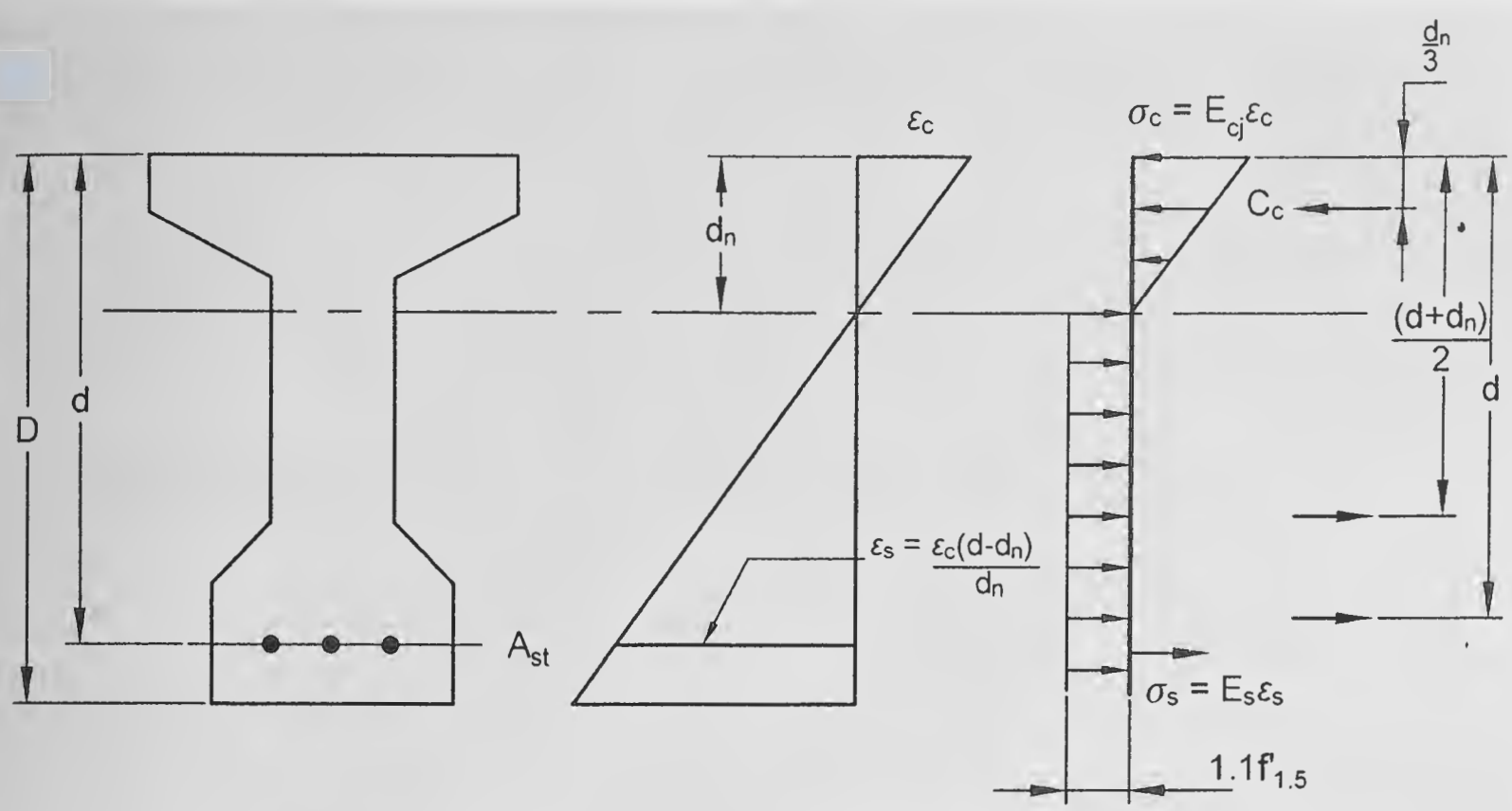

30A SELECTION 30B STRAIN 30C STRESS 30D FORCES

FIG. 30 STRESS AND STRAIN DISTRIBUTION ON A CRACKED SECTION SUBJECTED TO APPLIED IN-SERVICE BENDING MOMENT (M^*_s)

immediate deflection caused by the sustained load by the deflection multiplier k_{cs}. The deflection multiplier depends on the ratio A_{sc}/A_{st}, where A_{sc} is the area of the longitudinal reinforcement in the compressive zone of the cracked section (that is, between the neutral axis and the extreme compressive fibre of the cracked cross-section) and A_{st} is the area of the tensile reinforcement.

A-5 DURABILITY

The minimum concrete grade and cover for SFRC in respective exposure classification shall be as for concrete without fibres and shall apply to the steel reinforcement only. SFRC shall not be used in exposure classification C1 or C2.

NOTES

1 Steel fibres do not require concrete cover as specified for steel reinforcement.

2 SFRC may not be suitable in some exposure classification U environments.

3 Fibres close to the surface are subject to corrosion and may result in surface staining. This will not impact durability.

A-6 FIRE

The structural performance of SFRC for fire shall be determined in accordance with this annex. The material properties for SFRC shall be as specified for concrete in this annex except that to characteristic residual tensile stress of SFRC at elevated temperatures ($f'_{1.52\theta}$) shall be either,

a) taken as $(f'_{1.52\theta}) = k_{\theta 1} \times f'_{1.5}$ where $k_{\theta 1}$ is given in Table 21; or

b) determined statistically from tests.

Table 21 Elevated Temperature Coefficient for Residual Tensile Stress of SFRC

(*Clause* A-6)

Temperature of SFRC °C	0	100	500	700	1 200
$k_{\theta 1}$	1.0	1.0	0.6	0.1	0.0

NOTE — Linear interpolation between the values is permitted.

A-7 PRODUCTION OF SFRC

A-7.1 Fibres

Steel fibres shall comply with accepted standard. The 'Certificate of Conformity' shall be supplied on request to the relevant authority.

NOTE — Till the availability of a separate Indian Standard Specification for Steel Fibres, reference may be made to ASTM A820:2016 'Standard Specification for Steel Fibres for Fibre-Reinforced Concrete'.

A-7.2 Mixing of Fibres

Fibres of the type and quantity specified shall be added in a controlled process ensuring that they are dispersed uniformly through the concrete mix. If added after the main mixing process, the concrete shall be remixed until the fibres have been completely dispersed throughout the batch.

NOTES

1 Balling of fibres should be avoided.

2 A record of fibre content should be recorded for each batch.

A-7.3 Pre-Construction Testing of Materials

Pre-construction testing in the form of initial type tests shall be undertaken in accordance with Table 22.

New initial type tests shall be undertaken when any of the following occur:

a) Concrete composition changes.
b) At least one source material of the concrete changes.
c) Results of compressive tests undertaken as per this annex do not meet the specification.
d) At least once in a period of 12 months.

The pre-construction tests shall be performed with the same personnel, materials and equipment that shall be used during production.

Table 22 Pre-Construction Tests

(*Clause* A-7.3)

Sl No. (1)	Material (2)	Inspection/Test (3)	Purpose (4)
i)	Steel fibres	a) Check delivery note	Verify that the delivery is in accordance with the order, and is shipped from the correct source
		b) Check conformity label	Verify that the fibres have the correct conformity label which matches the corresponding Certificate of Conformity
ii)	Steel fibre content in the fresh concrete	Testing according to **A-2.5** on the basis of 9 samples	Conformity with the target dosage. Verify homogeneous distribution of the steel fibres in the mix
iii)	Steel fibre concrete performance	Check limit of proportionality, and post-crack flexural strength in accordance with **A-3.3.6** on a minimum of 12 beams	Verify, if the performance is in accordance to the specification The performance level serves as the reference for continuous production control

NOTE — The strength of the population may be treated as normally distributed and the characteristic strength determined in accordance with this annex. A confidence level of 75 percent shall be used such that 95 percent of the population exceeds the characteristic value. For a sample of 12 specimens, the characteristic strength may be calculated from the mean strength using characteristic strength = mean strength ×(1–1.84 × COV). The coefficient of variation (COV as a percentage) shall not exceed 25 percent.

A-7.4 Factory Production control

Factory production control is accordance with Table 23 shall be undertaken to establish a production process for the steel fibre reinforced concrete, and shall include the following:

a) Checking the correct concrete constituents are being used in production.
b) Steel fibres are checked against specified requirements.
c) Compressive tests undertaken in accordance with good practice [6-5A(14)].
d) Fibre content and distribution.

A-7.5 Determining the Steel Fibre Content

Steel fibre content shall be measured from samples taken from the production concrete, by volume of concrete.

In addition,

a) a sample shall be taken from the batch of concrete at unloading from the first third, middle third and final third of the batch;
b) each sample shall be a minimum of 10 litre;
c) the sample container shall be filled in one continuous pour and where possible directly from the discharge chute; and
d) wash out or magnetic separation only shall be used.

The conformity of the correct steel fibre dosage is proven if the criteria in Table 24 are met.

A-7.6 Sampling, Testing and Assessment for Compliance of Hardened SFRC

When concrete is specified by parameters other than strength grade, the method of production control and, if required, project control shall be specified together with the relevant compliance criteria.

Methods of control and assessment shall provide a reliable operating characteristic curve so that,

a) concrete with a proportion defective of 0.05 has a probability of acceptance of at least 50 percent; and
b) concrete with a proportion defective of 0.30 has a probability of rejection of at least 98 percent.

Table 23 Routine Production Control

(*Clause* A-7.4)

Sl No. (1)	Subject (2)	Inspection/Test (3)	Purpose (4)	Frequency (5)
i)	**Equipment inspection**			
	Automatic dosing equipment for steel fibres	a) Visual inspection	Assure correct functioning of dosing device	Once per production day
		b) Control of accuracy	Avoid improper fibre dosage	On installation Periodically In case of doubt
ii)	**Materials inspection**			
	Steel fibres	a) Check delivery note	Verify that the delivery is in accordance with the order, and is shipped from the correct source	Each delivery
		b) Check conformity requirements	Verify that the fibres matches the corresponding Certificate of Conformity	Each delivery
		c) Visual control, measure fibre dimensions	Compare the fibre geometry with the fibres used for ITT	Each delivery
iii)	**Production process inspection**			
	a) Fibres content-record	Record the quantity added	Check the content	Every batch
	b) Fibre content in the fresh concrete	Testing according to **A-7.5**	Conformity with the target dosage Verify homogenous distribution of the steel fibres in the mix	Beginning of each day and every/ $50m^3$ (manual dosing) and/ $150\ m^3$ (auto dosing)
	c) Concrete mix	Visual check	Correct mixing with correct fibre type and even fibre distribution without balling	Daily
iv)	**Finished product inspection**			
	Steel fibre concrete performance	Check limit of proportionality, and post-crack flexural strength in accordance with **A-3.3.6**	Check performance level of the specification	2 beams every other day of production

Table 24 Criteria of Acceptance for Steel Fibre Dosage

(*Clause* A-7.5)

Sl No. (1)	Test Control (2)	Test Control (3)	Criteria (4)
i)	Each sample	Each partial test	≥ 0.80 of the specified target dosage
ii)	Average of 3 samples from the batch	Each test	≥ 0.85 of the specified target dosage
iii)	Continuous control: average of >3 tests	Continuous control average of >3 tests	≥ 0.90 of the specified target dosage

ANNEX B

(*Clauses* 17.2.2, 21.3.1, 21.7, 25.2.1.1 *and* 31.1)

STRUCTURAL DESIGN (WORKING STRESS METHOD)

B-1 GENERAL

B-1.1 General Design Requirements

The general design requirements of Section 5A (C) shall apply to this annex.

B-1.2 Redistribution of Moments

Except where the simplified analysis using coefficients (*see* **21.5**) is used, the moments over the supports for any assumed arrangement of loading, including the dead load moments may each be increased or decreased by not more than 15 percent, provided that these modified moments over the supports are used for the calculation of the corresponding moments in the spans.

B-1.3 Assumptions for Design of Members

In the methods based on elastic theory, the following assumptions shall be made:

a) At any cross-section, plane sections before bending remain plain after bending.

b) All tensile stresses are taken up by reinforcement and none by concrete, except as otherwise specifically permitted.

c) The stress-strain relationship of steel and concrete, under working loads, is a straight line.

d) The modular ratio m has the value $\frac{280}{3\sigma_{cbc}}$

where σ_{cbc} is permissible compressive stress due to bending in concrete, in N/mm^2, as specified in Table 25.

NOTE — The expression given for m partially takes into account long-term effects such as creep. Therefore this m is not the same as the.modular ratio derived based on the value of E_c given in **5.2.3.1**.

B-2 PERMISSIBLE STRESSES

B-2.1 Permissible Stresses in Concrete

Permissible stresses for the various grades of concrete shall be taken as those given in Tables 25 and 27.

NOTE — For increase in strength with age, **5.2.1** shall be applicable. The values of permissible stress shall be obtained by interpolation between the grades of concrete.

B-2.1.1 *Direct Tension*

For members in direct tension, when full tension is taken by the reinforcement alone, the tensile stress shall be not greater than the values given below:

Grade of Concrete	M10	M15	M20	M25	M30	M35	M40	M45	M50 and Above
Tensile Stress N/mm^2	1.2	2.0	2.8	3.2	3.6	4.0	4.4	4.8	5.2

The tensile stress shall be calculated as:

$$\frac{F_t}{A_e + mA_{st}}$$

where

F_t = total tension on the member minus pretension in steel, if any, before concreting;

A_e = cross-sectional area of concrete excluding any finishing material and reinforcing steel;

m = modular ratio; and

A_{st} = cross-sectional area of reinforcing steel in tension.

B-2.1.2 *Bond Stress for Deformed Bars*

In the case of deformed bars conforming to accepted standard [6-5A(36)], the bond stresses given in Table 25 may be increased by 60 percent.

B-2.2 Permissible Stresses in Steel Reinforcement

Permissible stresses in steel reinforcement shall not exceed the values specified in Table 26.

B-2.2.1 In flexural member the value of σ_{st} given in Table 26 is applicable at the centroid of the tensile reinforcement subject to the condition that when more than one layer of tensile reinforcement is provided, the stress at the centroid of the outermost layer shall not exceed by more than 10 percent the value given in Table 26.

B-2.3 Increase in Permissible Stresses

Where stresses due to wind (or earthquake), temperature and shrinkage effects are combined with those due to dead and imposed load, the stresses specified in Tables 25, 26 and 27 may be exceeded upto a limit of $33\frac{1}{3}$ percent. Wind and seismic forces need not be considered as acting simultaneously.

Table 25 Permissible Stresses in Concrete

(*Clauses* B-1.3, B-2.1, B-2.1.2, B-2.3 *and* B-4.2)

All values in N/mm^2.

Sl No.	Grade of Concrete	Permissible Stress in Compression		Permissible Stress in Bond (Average) for Plain Bars in Tension
		Bending σ_{cbc}	Direct σ_{cc}	τ_{bd}
(1)	(2)	(3)	(4)	(5)
i)	M 10	3.0	2.5	—
ii)	M 15	5.0	4.0	0.6
iii)	M 20	7.0	5.0	0.8
iv)	M 25	8.5	6.0	0.9
v)	M 30	10.0	8.0	1.0
vi)	M 35	11.5	9.0	1.1
vii)	M 40	13.0	10.0	1.2
viii)	M 45	14.5	11.0	1.3
ix)	M 50	16.0	12.0	1.4
x)	M 55	18.0	13.5	1.5
xi)	M 60	20.0	15.0	1.6

NOTES

1 The values of permissible shear stress in concrete are given in Table 27.

2 The bond stress given in col 4 shall be increased by 25 percent for bars in compression.

B-3 PERMISSIBLE LOADS IN COMPRESSION MEMBERS

B-3.1 Pedestals and Short Columns with Lateral Ties

The axial load P permissible on a pedestal or short column reinforced with longitudinal bars and lateral ties shall not exceed that given by the following equation:

$$P = \sigma_{cc} A_c + \sigma_{sc} A_{sc}$$

where

σ_{cc} = permissible stress in concrete in direct compression,

A_c = cross-sectional area of concrete excluding any finishing material and reinforcing steel,

A_{sc} = cross-sectional area of the longitudinal steel.

NOTE — The minimum eccentricity mentioned in **24.4** may be deemed to be incorporated in the above equation.

B-3.2 Short Columns with Helical Reinforcement

The permissible load for columns with helical reinforcement satisfying the requirement of **38.4.1** shall be 1.05 times the permissible load for similar member with lateral ties or rings.

Table 26 Permissible Stresses in Steel Reinforcement

(*Clauses* B-2.2, B-2.2.1, B-2.3 *and* B-4.2)

Sl No.	Type of Stress in Steel Reinforcement	Permissible Stresses N/mm^2		
		Mild Steel Bars Conforming to Grade 1 of Accepted Standard [6-5A(42)]	Medium Tensile Steel Conforming to Accepted Standard [6-5A(42)]	High Yield Strength Deformed Bars Conforming to Accepted Standard [6-5A(36)] (Grade Fe 415)
(1)	(2)	(3)	(4)	(5)
i)	Tension (σ_{st} or σ_{sv})			
	a) Up to and including 20 mm	140	Half the guaranteed yield stress subject to a maximum of 190	230
	b) Over 20 mm	130		230
ii)	Compression in column bars (σ_{sc})	130	130	190
iii)	Compression in bars in a beam or slab when the compressive resistance of the concrete is taken into account	The calculated compressive stress in the surrounding concrete multiplied by 1.5 times the modular ratio or σ_{sc} whichever is lower		
iv)	Compression in bars in a beam or slab where the compressive resistance of the concrete is not taken into account:			
	a) Up to and including 20 mm	140	Half the guaranteed yield stress subject to a maximum of 190	190
	b) Over 20 mm	130		190

NOTES

1 For high yield strength deformed bars of Grade Fe 500 the permissible stress in direct tension and flexural tension shall be 0.55 f_y. The permissible stresses for shear and compression reinforcement shall be as for Grade Fe 415.

2 For welded wire fabric conforming to accepted standard [6-5A(43)], the permissible value in tension σ_{st} is 230 N/mm^2.

3 For the purpose of this standard, the yield stress of steels for which there is no clearly defined yield point should be taken to be 0.2 percent proof stress.

4 When mild steel conforming to Grade II of accepted standard [6-5A(42)] is used, the permissible stresses shall be 90 percent of the permissible stresses in col 3, or if the design details have already been worked out on the basis of mild steel conforming to Grade 1 of accepted standard [6-5A(42)]; the area of reinforcement shall be increased by 10 percent of that required for Grade 1 steel.

B-3.3 Long Columns

The maximum permissible stress in a reinforced concrete column or part thereof having a ratio of effective column length to least lateral dimension above 12 shall not exceed that which results from the multiplication of the appropriate maximum permissible stress as specified under **B-2.1** and **B-2.2** by the coefficient C_r given by the following formula:

$$C_r = 1.25 - \frac{l_{ef}}{48b}$$

where

C_r = reduction coefficient;

l_{ef} = effective length of column; and

b = least lateral dimension of column; for column with helical reinforcement, b is the diameter of the core.

For more exact calculations, the maximum permissible stresses in a reinforced concrete column or part thereof having a ratio of effective column length to least lateral radius of gyration above 40 shall not exceed those which result from the multiplication of the appropriate maximum permissible stresses specified under **B-2.1** and **B-2.2** by the coefficient C_r given by the following formula:

$$C_r = 1.25 - \frac{l_{ef}}{160 i_{min}}$$

where i_{min} = least radius of gyration.

B-3.4 Composite Columns

a) *Allowable load* — The allowable axial load P on a composite column consisting of structural steel or cast-iron column thoroughly encased in concrete reinforced with both longitudinal and spiral reinforcement, shall not exceed that given by the following formula:

$$P = \sigma_{cc} A_c + \sigma_{sc} A_{sc} + \sigma_{mc} A_m$$

where

σ_{cc} = permissible stress in concrete in direct compression;

A_c = net area of concrete section; which is equal to the gross area of the concrete section $= A_{sc} - A_m$;

A_{sc} = cross-sectional area of longitudinal bar reinforcement;

σ_{mc} = allowable unit stress in metal core, not to exceed 125 N/mm^2 for a steel core, or 70 N/mm^2 for a cast iron core; and

A_m = cross-sectional area of the steel or cast iron core.

b) *Metal core and reinforcement* — The cross-sectional area of the metal core shall not exceed 20 percent of the gross area of the column. If a hollow metal core is used, it shall be filled with concrete. The amount of longitudinal and spiral reinforcement and the requirements as to spacing of bars, details of splices and thickness of protective shell outside the spiral, shall conform to requirements of **25.5.3**. A clearance of at least 75 mm shall be maintained between the spiral and the metal core at all points, except that when the core consists of a structural steel H-column, the minimum clearance may be reduced to 50 mm.

c) *Splices and connections of metal cores* — Metal cores in composite columns shall be accurately milled at splices and positive provisions shall be made for alignment of one core above another. At the column base, provisions shall be made to transfer the load to the footing at safe unit stresses in accordance with **33**. The base of the metal section shall be designed to transfer the load from the entire composite columns to the footing, or it may be designed to transfer the load from the metal section only, provided it is placed in the pier or pedestal as to leave ample section of concrete above the base for the transfer of load from the reinforced concrete section of the column by means of bond on the vertical reinforcement and by direct compression on the concrete. Transfer of loads to the metal core shall be provided for by the use of bearing members, such as billets, brackets or other positive connections, these shall be provided at the top of the metal core and at intermediate floor levels where required. The column as a whole shall satisfy the requirements of formula given under (a) at any point; in addition to this, the reinforced concrete portion shall be designed to carry, according to **B-3.1** or **B-3.2** as the case may be, all floor loads brought into the column at levels between the metal brackets or connections. In applying the formula under **B-3.1** or **B-3.2** the gross area of column shall be taken to be the area of the concrete section outside the metal core, and the allowable load on the reinforced concrete section shall be further limited to $0.28 f_{ck}$ times gross sectional area of the column.

d) *Allowable load on metal core only* — The metal core of composite columns shall be designed to carry safely any construction or other loads to be placed upon them prior to their encasement in concrete.

B-4 MEMBERS SUBJECTED TO COMBINED AXIAL LOAD AND BENDING

B-4.1 Design Based on Uncracked Section

A member subjected to axial load and bending (due to eccentricity of load, monolithic construction, lateral forces, etc) shall be considered safe provided the following conditions are satisfied:

a) $$\frac{\sigma_{cc,cal}}{\sigma_{cc}} + \frac{\sigma_{cbc,cal}}{\sigma_{cbc}} \leq 1$$

where

$\sigma_{cc,cal}$ = calculated direct compressive stress in concrete,

σ_{cc} = permissible axial compressive stress in concrete,

$\sigma_{cbc,cal}$ = calculated bending compressive stress in concrete, and

σ_{cbc} = permissible bending compressive stress in concrete.

b) The resultant tension in concrete is not greater than 35 percent and 25 percent of the resultant compression for biaxial and uniaxial bending respectively, or does not exceed three-fourths, the 7 days modulus of rupture of concrete.

NOTES

1 $\sigma_{cc,cal} = \frac{P}{A_c + 1.5mA_{sc}}$ for columns with ties where P, A_c and A_{sc} are defined in **B-3.1** and m is the modular ratio.

2 $\sigma_{cbc,cal} = \frac{M}{Z}$ where M equals the moment and Z equals modulus of section. In the case of sections subject to moments in two directions, the stress shall be calculated separately and added algebraically.

B-4.2 Design Based on Cracked Section

If the requirements specified in **B-4.1** are not satisfied, the stresses in concrete and steel shall be calculated by the theory of cracked section in which the tensile resistance of concrete is ignored. If the calculated stresses are within the permissible stress specified in Tables 25, 26 and 27 the section may be assumed to be safe.

NOTE — The maximum stress in concrete and steel may be found from tables and charts based on the cracked section theory or directly by determining the no-stress line which should satisfy the following requirements:

a) The direct load should be equal to the algebraic sum of the forces on concrete and steel,

b) The moment of the external loads about any reference line should be equal to the algebraic sum of the moment of the forces in concrete (ignoring the tensile force in concrete) and steel about the same line, and

c) The moment of the external loads about any other reference lines should be equal to the algebraic sum of the moment of the forces in concrete (ignoring the tensile force in concrete) and steel about the same line.

B-4.3 Members Subjected to Combined Direct Load and Flexure

Members subjected to combined direct load and flexure shall be designed by limit state method as in **38.5** after applying appropriate load factors as given in Table 18.

B-5 SHEAR

B-5.1 Nominal Shear Stress

The nominal shear stress τ_v in beams or slabs of uniform depth shall be calculated by the following equation:

$$\tau_v = \frac{V}{bd}$$

where

V = shear force due to design loads,

b = breadth of the member, which for flanged sections shall be taken as the breadth of the web, and

d = effective depth.

B-5.1.1 *Beams of Varying Depth*

In the case of beams of varying depth, the equation shall be modified as:

$$\tau_v = \frac{V \pm \frac{M \tan\beta}{d}}{bd}$$

where

τ_v, V, b and d are the same as in **B-5.1**.

M = bending moment at the section, and

β = angle between the top and the bottom edges of the beam.

The negative sign in the formula applies when the bending moment M increases numerically in the same direction as the effective depth d increases, and the positive sign when the moment decreases numerically in this direction.

B-5.2 Design Shear Strength of Concrete

B-5.2.1 The permissible shear stress in concrete in beams without shear reinforcement is given in Table 27.

Table 27 Permissible Shear Stress in Concrete

(*Clauses* B-2.1, B-2.3, B-4.2, B-5.2.1, B-5.2.2, B-5.3, B-5.4, B-5.5.3, B-6.3.2, B-6.3.3, B-6.4.3 *and* Table 25)

Sl No.	$\frac{100A_s}{bd}$	Permissible Shear Stress in Concrete τ_c, N/mm² Grade of Concrete					
		M 15	M 20	M 25	M 30	M 35	M 40 and Above
(1)	(2)	(3)	(4)	(5)	(6)	(7)	(8)
i)	≤ 0.15	0.18	0.18	0.19	0.20	0.20	0.20
ii)	0.25	0.22	0.22	0.23	0.23	0.23	0.23
iii)	0.50	0.29	0.30	0.31	0.31	0.31	0.32
iv)	0.75	0.34	0.35	0.36	0.37	0.37	0.38
v)	1.00	0.37	0.39	0.40	0.41	0.42	0.42
vi)	1.25	0.40	0.42	0.44	0.45	0.45	0.46
vii)	1.50	0.42	0.45	0.46	0.48	0.49	0.49
viii)	1.75	0.44	0.47	0.49	0.50	0.52	0.52
ix)	2.00	0.44	0.49	0.51	0.53	0.54	0.55
x)	2.25	0.44	0.51	0.53	0.55	0.56	0.57
xi)	2.50	0.44	0.51	0.55	0.57	0.58	0.60
xii)	2.75	0.44	0.51	0.56	0.58	0.60	0.62
xiii)	3.00 and above	0.44	0.51	0.57	0.60	0.62	0.63

NOTE — A_s is that area of longitudinal tension reinforcement which continues at least one effective depth beyond the section being considered except at supports where the full area of tension reinforcement may be used provided the detailing conforms to **25.2.2** and **25.2.3**.

B-5.2.1.1 For solid slabs the permissible shear stress in concrete shall be $k\tau_c$ where k has the value given below:

Overall Depth of Slab mm	300 or More	275	250	225	200	175	150 or Less
k	1.00	1.05	1.10	1.15	1.20	1.25	1.30

NOTE – This does not apply to flat slabs for which **30.6** shall apply.

B-5.2.2 *Shear Strength of Members Under Axial Compression*

For members subjected to axial compression P, the permissible shear stress in concrete τ_c given in Table 27, shall be multiplied by the following factor:

$$\delta = 1 + \frac{5P}{A_g f_{ck}}, \text{ but not exceeding 1.5.}$$

where

P = axial compressive force, in N;

A_g = gross area of the concrete section, in mm²; and

f_{ck} = characteristic compressive strength of concrete.

B-5.2.3 *With Shear Reinforcement*

When shear reinforcement is provided the nominal shear stress $\tau_{c\,max}$ in beams shall not exceed τ_c given in Table 28.

B-5.2.3.1 For slabs, τ_v shall not exceed half the value of $\tau_{c\,max}$ given in Table 28.

Table 28 Maximum Shear Stress $\tau_{c\,max}$, N/mm²

(*Clauses* B-5.2.3, B-5.2.3.1, B-5.5.1 *and* B-6.3.1)

Concrete Grade	M15	M20	M25	M30	M35	M 40 and Above
$\tau_{c\,max}$, N/mm²	1.6	1.8	1.9	2.2	2.3	2.5

B-5.3 Minimum Shear Reinforcement

When τ_v is less than τ_c given in Table 27, minimum shear reinforcement shall be provided in accordance with **25.5.1.6**.

B-5.4 Design of Shear Reinforcement

When τ_v exceeds τ_c given in Table 27, shear reinforcement shall be provided in any of the following forms:

a) Vertical stirrups,

b) Bent-up bars along with stirrups, and

c) Inclined stirrups.

Where bent-up bars are provided, their contribution towards shear resistance shall not be more than half that of the total shear reinforcement.

Shear reinforcement shall be provided to carry a shear equal to $V - \tau_c bd$. The strength of shear reinforcement V_s shall be calculated as below:

a) For vertical stirrups:

$$V_s = \frac{\sigma_{sv} A_{sv} d}{s_v}$$

b) For inclined stirrups or a series of bars bent-up at different cross-sections:

$$V_s = \frac{\sigma_{sv} A_{sv} d}{s_v}(\sin\alpha + \cos\alpha)$$

c) For single bar or single group of parallel bars, all bent-up at the same cross-section:

$$V_s = \sigma_{sv} A_{sv} \sin\alpha$$

where

A_{sv} = total cross-sectional area of stirrup legs or bent-up bars within a distance

s_v = spacing of the stirrups or bent-up bars along the length of the member,

τ_c = design shear strength of the concrete,

b = breadth of the member which for flanged beams, shall be taken as the breadth of the web b_w,

σ_{sv} = permissible tensile stress in shear reinforcement which shall not be taken greater than 230 N/mm^2,

α = angle between the inclined stirrup or bent-up bar and the axis of the member, not less than 45°, and

d = effective depth.

NOTE — Where more than one type of shear reinforcement is used to reinforce the same portion of the beam, the total shear resistance shall be computed as the sum of the resistance for the various types separately. The area of the stirrups shall not be less than the minimum specified in **25.5.1.6**.

B-5.5 Enhanced Shear Strength of Sections Close to Supports

B-5.5.1 *General*

Shear failure at sections of beams and cantilevers without shear reinforcement will normally occur on plane inclined at an angle 30° to the horizontal. If the angle of failure plane is forced to be inclined more steeply than this [because the section considered (X–X) in Fig. 24 is close to a support or for other reasons], the shear force required to produce failure is increased.

The enhancement of shear strength may be taken into account in the design of sections near a support by increasing design shear strength of concrete, τ_c to $2d\tau_c/a_v$ provided that the design shear stress at the face of support remains less than the values given in Table 28. Account may be taken of the enhancement in any situation where the section considered is closer to the face of a support of concentrated load than twice the effective depth, d. To be effective, tension reinforcement should extend on each side of the point where it is intersected by a possible failure plane for a distance at least equal to the effective depth, or be provided with an equivalent anchorage.

B-5.5.2 *Shear Reinforcement for Sections Close to Supports*

If shear reinforcement is required, the total area of this is given by:

$$A_s = a_v b(\tau_v - 2d\,\tau_c/a_v)/\sigma_{sv} \geq 0.4 a_v b/0.87 f_y$$

This reinforcement should be provided within the middle three quarters of a_v. Where a_v is less than d, horizontal shear reinforcement will be more effective than vertical.

B-5.5.3 *Enhanced Shear Strength Near Supports (Simplified Approach)*

The procedure given in **B-5.5.1** and **B-5.5.2** may be used for all beams. However, for beams carrying generally uniform load or where the principal load is located further than $2d$ from the face of support, the shear stress may be calculated at a section a distance d from the face of support. The value of τ_c is calculated in accordance with Table 27 and appropriate shear reinforcement is provided at sections closer to the support, no further check for such section is required.

B-6 TORSION

B-6.1 General

In structures where torsion is required to maintain equilibrium, members shall be designed for torsion in accordance with **B-6.2**, **B-6.3** and **B-6.4**. However, for such indeterminate structures where torsion can be eliminated by releasing redundant restraints, no specific design for torsion is necessary provided torsional stiffness is neglected in the calculation of internal forces. Adequate control of any torsional cracking is provided by the shear reinforcement as per **B-5**.

NOTE — The approach to design in this clause for torsion is as follows:

Torsional reinforcement is not calculated separately from that required for bending and shear. Instead the total longitudinal reinforcement is determined for a fictitious bending moment which is a function of actual bending moment and torsion; similarly web reinforcement is determined for a fictitious shear which is a function of actual shear and torsion.

B-6.1.1 The design rules laid down in **B-6.3** and **B-6.4** shall apply to beams of solid rectangular cross-section. However, these clauses may also be applied to flanged beams by substituting b_w for b, in which case they are generally conservative; therefore specialist literature may be referred to.

B-6.2 Critical Section

Sections located less than a distance d, from the face of the support may be designed for the same torsion as computed at a distance d, where d is the effective depth.

B-6.3 Shear and Torsion

B-6.3.1 *Equivalent Shear*

Equivalent shear, V_e shall be calculated from the formula:

$$V_e = V + 1.6\left(\frac{T}{b}\right)$$

where

V_e = equivalent shear,

V = shear,

T = torsional moment, and

b = breadth of beam.

The equivalent nominal shear stress, τ_{ve}, in this case shall be calculated as given in **B-5.1**, except for substituting V by V_e. The values of τ_{ve} shall not exceed the values of $\tau_{c\,max}$ given in Table 28.

B-6.3.2 If the equivalent nominal shear stress τ_{ve} does not exceed τ_c, given in Table 27, minimum shear reinforcement shall be provided as specified in **25.5.1.6**.

B-6.3.3 If τ_{ve} exceeds τ_c given in Table 27, both longitudinal and transverse reinforcement shall be provided in accordance with **B-6.4**.

B-6.4 Reinforcement in Members Subjected to Torsion

B-6.4.1 Reinforcement for torsion, when required, shall consist of longitudinal and transverse reinforcement.

B-6.4.2 *Longitudinal Reinforcement*

The longitudinal reinforcement shall be designed to resist an equivalent bending moment, M_{e1}, given by:

$$M_{e1} = M + M_t$$

where

M = bending moment at the cross-section, and

$$M_t = T\frac{(1+D/b)}{1.7},$$

where T is the torsional moment, D is the overall depth of the beam and b is the breadth of the beam.

B-6.4.2.1 If the numerical value of M_t as defined in **B-6.4.2** exceeds the numerical value of the moment M, longitudinal reinforcement shall be provided on the flexural compression face, such that the beam can also withstand an equivalent moment M_{e2} given by $M_{e2} = M_t - M$, the moment M_{e2} being taken as acting in the opposite sense to the moment M.

B-6.4.3 *Transverse Reinforcement*

Two legged closed hoops enclosing the corner longitudinal bars shall have an area of cross-section A_{sv}, given by:

$A_{sv} = \dfrac{T.s_v}{b_1 d_1 \sigma_{sv}} + \dfrac{V.s_v}{2.5 d_1 \sigma_{sv}}$, but the total transverse reinforcement shall not be less than $\dfrac{(\tau_{ve} - \tau_c) b.s_v}{\sigma_{sv}}$

where

T = torsional moment,

V = shear force,

s_v = spacing of the stirrup reinforcement,

b_1 = centre-to-centre distance between corner bars in the direction of the width,

d_1 = centre-to centre distance between corner bars in the direction of the depth,

b = breadth of the member

σ_{sv} = permissible tensile stress in shear reinforcement

τ_{ve} = equivalent shear stress as specified in **B-6.3.1**, and

τ_c = shear strength of the concrete as specified in Table 27.

ANNEX C

(*Clauses* 21.3.2, 22.2.1 *and* 41.1)

CALCULATION OF DELEFCTION

C-1 TOTAL DEFLECTION

The total deflection shall be taken as the sum of the short-term deflection determined in accordance with **C-2** and the long-term deflection, in accordance with **C-3** and **C-4**.

C-2 SHORT-TERM DEFLECTION

The short-term deflection may be calculated by the usual methods for elastic deflections using the short-term modulus of elasticity of concrete, E_c and an effective moment of inertia I_{eff} given by the following equation:

$$I_{eff} = \frac{I_r}{1.2 - \frac{M_r}{M}\frac{z}{d}\left(1 - \frac{x}{d}\right)\frac{b_w}{b}} \text{ ; but}$$

$$I_r \le I_{eff} \le I_{gr}$$

where

I_r = moment of inertia of the cracked section,

M_r = cracking moment, equal to $\frac{f_{cr} I_{gr}}{y_t}$ where

f_{cr} = modulus of rupture of concrete,

I_{gr} = moment of inertia of the gross section about the centroidal axis, neglecting the reinforcement, and y_t is the distance from centroidal axis of gross section, neglecting the reinforcement, to extreme fibre in tension,

M = maximum moment under service loads,

z = lever arm,

x = depth of neutral axis,

d = effective depth,

b_w = breadth of web, and

b = breadth of compression face.

For continuous beams, deflection shall be calculated using the values of I_r, I_{gr} and M_r modified by the following equation:

$$X_e = k_1\left[\frac{X_1 + X_2}{2}\right] + (1 - k_1)X_o$$

where

X_e = modified value of X,

X_1, X_2 = values of X at the supports,

X_o = value of X at mid span,

k_1 = coefficient given in Table 29, and

X = value of I_r, I_{gr} or M_r as appropriate.

C-3 DEFLECTION DUE TO SHRINKAGE

The deflection due to shrinkage a_{cs} may be computed from the following equation:

$$a_{cs} = k_3 \psi_{cs} l^2$$

where

k_3 is a constant depending upon the support conditions:

0.5 for cantilevers,

0.125 for simply supported members,

0.086 for members continuous at one end, and

0.063 for fully continuous members,

ψ_{cs} is shrinkage curvature = $k_4 \frac{\varepsilon_{cs}}{D}$

where ε_{cs} is the ultimate shrinkage strain of concrete (*see* **5.2.4**),

$$k_4 = 0.72 \times \frac{P_t - P_c}{\sqrt{P_t}} \le 1.0 \text{ for } 0.25 \le P_t - P_c < 1.0$$

$$= 0.65 \times \frac{P_t - P_c}{\sqrt{P_t}} \le 1.0 \text{ for } P_t - P_c \ge 1.0$$

where

$$P_t = \frac{100 A_{st}}{bd} \text{ and } P_c = \frac{100 A_{sc}}{bd}$$

and D is the total depth of the section, and l is the length of span.

Table 29 Values of Coefficient, k_1

(*Clause* C-2)

k_2	0.5 or less	0.6	0.7	0.8	0.9	1.0	1.1	1.2	1.3	1.4
k_1	0	0.03	0.08	0.16	0.30	0.50	0.73	0.91	0.97	1.0

NOTE — k_2 is given by:

$$k_2 = \frac{M_1 + M_2}{M_{F1} + M_{F2}}$$

where

M_1, M_2 = support moments, and

M_{F1}, M_{F2} = fixed end moments.

C-4 DEFLECTION DUE TO CREEP

The creep deflection due to permanent loads $a_{cc(perm)}$ may be obtained from the following equation:

$$a_{cc(perm)} = a_{i,\,cc(perm)} - a_{i(perm)}$$

where

$a_{i,\,cc(perm)}$ = initial deflection plus creep deflection due to permanent loads obtained using an elastic analysis with an effective modulus of elasticity.

$E_{ce} = \dfrac{E_c}{1+\theta}$; θ being the creep coefficient, and

$a_{i(perm)}$ = short-term deflection due to permanent load using E_c.

ANNEX D

(*Clauses* 23.4 *and* 36.1.2)

SLABS SPANNING IN TWO DIRECTIONS

D-1 RESTRAINED SLABS

D-1.0 When the corners of a slab are prevented from lifting, the slab may be designed as specified in **D-1.1** to **D-1.11**.

D-1.1 The maximum bending moments per unit width in a slab are given by the following equations:

$$M_x = \alpha_x w l_x^2$$

$$M_y = \alpha_y w l_x^2$$

where

α_x and α_y are coefficients given in Table 30;

w = total design load per unit area;

M_x, M_y = moments on strips of unit width spanning l_x and l_y, respectively; and

l_x and l_y = lengths of the shorter span and longer span respectively.

D-1.2 Slabs are considered as divided in each direction into middle strips and edge strips as shown in Fig. 31, the middle strip being three-quarters of the width and each edge strip one-eighth of the width.

D-1.3 The maximum moments calculated as in **D-1.1** apply only to the middle strips and no redistribution shall be made.

D-1.4 Tension reinforcement provided at mid-span in the middle strip shall extend in the lower part of the slab to within 0.25l of a continuous edge, or 0.15l of a discontinuous edge.

D-1.5 Over the continuous edges of a middle strip, the tension reinforcement shall extend in the upper part of the slab a distance of 0.15l from the support, and at least 50 percent shall extend a distance of 0.3l.

D-1.6 At a discontinuous edge, negative moments may arise. They depend on the degree of fixity at the edge of the slab but, in general, tension reinforcement equal to 50 percent of that provided at mid-span extending 0.1l into the span will be sufficient.

D-1.7 Reinforcement in edge strip, parallel to that edge, shall comply with the minimum given in Section 5A(C) and the requirements for torsion given in **D-1.8** to **D-1.10**.

D-1.8 Torsion reinforcement shall be provided at any corner where the slab is simply supported on both edges meeting at that corner. It shall consist of top and bottom reinforcement, each with layers of bars placed parallel to the sides of the slab and extending from the edges a minimum distance of one-fifth of the shorter span. The area of reinforcement in each of these four layers shall be three-quarters of the area required for the maximum mid-span moment in the slab.

D-1.9 Torsion reinforcement equal to half that described in **D-1.8** shall be provided at a corner contained by edges over only one of which the slab is continuous.

D-1.10 Torsion reinforcements need not be provided at any corner contained by edges over both of which the slab is continuous.

D-1.11 Where l_y / l_x is greater than 2, the slabs shall be designed as spanning one way.

D-2 SIMPLY SUPPORTED SLABS

D-2.1 When simply supported slabs do not have adequate provision to resist torsion at corners and to prevent the corners from lifting, the maximum moments per unit width are given by the following equation:

$$M_x = \alpha_x w l_x^2$$

Table 30 Bending Moment Coefficients for Rectangular Panels Supported on Four Sides with Provision for Torsion at Corners

(*Clauses* D-1.1 *and* 23.4.1)

Sl No.	Case No.	Type of Panel and Moments Considered	Short Span Coefficients α_x (Values of l_y/l_x)								Long Span Coefficients α_y for All Values of l_y/l_x
			1.0	1.1	1.2	1.3	1.4	1.5	1.75	2.0	
(1)	(2)	(3)	(4)	(5)	(6)	(7)	(8)	(9)	(10)	(11)	(12)
i)	1	*Interior panels:*									
		Negative moment at continuous edge	0.032	0.037	0.043	0.047	0.051	0.053	0.060	0.065	0.032
		Positive moment at mid-span	0.024	0.028	0.032	0.036	0.039	0.041	0.045	0.049	0.024
ii)	2	*One short edge discontinuous:*									
		Negative moment at continuous edge	0.037	0.043	0.048	0.051	0.055	0.057	0.064	0.068	0.037
		Positive moment at mid-span	0.028	0.032	0.036	0.039	0.041	0.044	0.048	0.052	0.028
iii)	3	*One long edge discontinuous:*									
		Negative moment at continuous edge	0.037	0.044	0.052	0.057	0.063	0.067	0.077	0.085	0.037
		Positive moment at mid-span	0.028	0.033	0.039	0.044	0.047	0.051	0.059	0.065	0.028
iv)	4	*Two adjacent edges discontinuous:*									
		Negative moment at continuous edge	0.047	0.053	0.060	0.065	0.071	0.075	0.084	0.091	0.047
		Positive moment at mid-span	0.035	0.040	0.045	0.049	0.053	0.056	0.063	0.069	0.035
v)	5	*Two short edges discontinuous:*									
		Negative moment at continuous edge	0.045	0.049	0.052	0.056	0.059	0.060	0.065	0.069	-
		Positive moment at mid-span	0.035	0.037	0.040	0.043	0.044	0.045	0.049	0.052	0.035
vi)	6	*Two long edges discontinuous:*									
		Negative moment at continuous edge	—	—	—	—	—	—	—	—	0.045
		Positive moment at mid-span	0.035	0.043	0.051	0.057	0.063	0.068	0.080	0.088	0.035
vii)	7	*Three edges discontinuous (One long edge continuous):*									
		Negative moment at continuous edge	0.057	0.064	0.071	0.076	0.080	0.084	0.091	0.097	—
		Positive moment at mid-span	0.043	0.048	0.053	0.057	0.060	0.064	0.069	0.073	0.043
viii)	8	*Three edges discontinuous (One short edge continuous):*									
		Negative moment at continuous edge	—	—	—	—	—	—	—	—	0.057
		Positive moment at mid-span	0.043	0.051	0.059	0.065	0.071	0.076	0.087	0.096	0.043
ix)	9	*Four edges discontinuous:*									
		Positive moment at mid-span	0.056	0.064	0.072	0.079	0.085	0.089	0.100	0.107	0.056

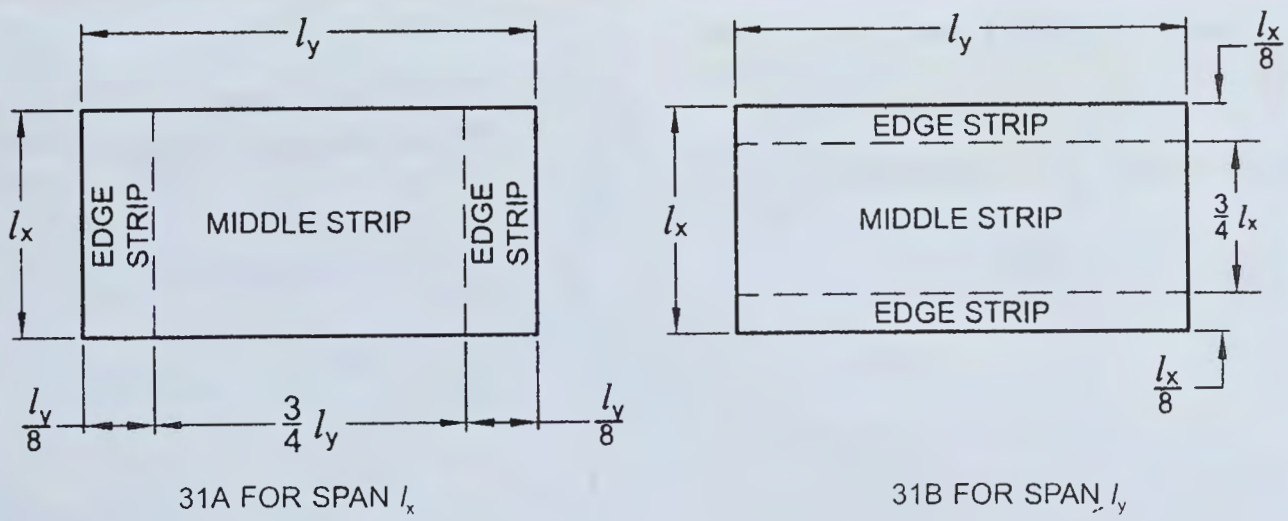

FIG. 31 DIVISION OF SLAB INTO MIDDLE AND EDGE STRIPS

$$M_y = \alpha_y w l_x^2$$

where

M_x, M_y, l_x, l_y are same as those in **D-1.1**, and α_x and α_y are moment coefficients given in Table 31.

D-2.1.1 At least 50 percent of the tension reinforcement provided at mid-span should extend to the supports. The remaining 50 percent should extend to within $0.1 l_x$ or $0.1 l_y$ of the support, as appropriate.

Table 31 Bending Moment Coefficients for Slabs Spanning in Two Directions at Right Angles, Simply Supported on Four Sides

(*Clause* D-2.1)

l_y / l_x	1.0	1.1	1.2	1.3	1.4	1.5	1.75	2.0	2.5	3.0
α_x	0.062	0.074	0.084	0.093	0.099	0.104	0.113	0.118	0.122	0.124
α_y	0.062	0.061	0.059	0.055	0.051	0.046	0.037	0.029	0.020	0.014

ANNEX E

(*Clause* 24.2)

EFFECTIVE LENGTH OF COLUMNS

E-1 In the absence of more exact analysis, the effective length of columns in framed structures may be obtained from the ratio of effective length to unsupported length l_{ef}/l given in Fig. 32 when relative displacement of the ends of the column is prevented and in Fig. 33 when relative lateral displacement of the ends is not prevented. In the latter case, it is recommended that the effective length ratio l_{ef}/l may not be taken to be less than 1.2.

NOTES

1 Figures 31 and 32 are reproduced from 'The Structural Engineer' No. 7, Volume 52, July 1974 by the permission of the Council of the Institution of Structural Engineers, U.K.

2 In Figs. 31 and 32, β_1 and β_2 are equal to:

$$\frac{\sum K_c}{\sum K_c + \sum K_b}$$

where the summation is to be done for the members framing into a joint at top and bottom respectively; and K_c and K_b being the flexural stiffness for column and beam, respectively.

E-2 To determine whether a column is a no sway or a sway column, stability index Q may be computed as given below:

$$Q = \frac{\sum P_u \Delta_u}{H_u h_s}$$

where

$\sum P_u$ = sum of axial loads on all column in the storey,

Δ_u = elastically computed first order lateral deflection,

H_u = total lateral force acting within the storey, and

h_s = height of the storey.

If $Q \leq 0.04$, then the column in the frame may be taken as no sway column, otherwise the column will be considered as sway column.

E-3 For normal usage assuming idealized conditions, the effective length l_{ef} of the compression member in a given plane may be assessed on the basis of Table 32.

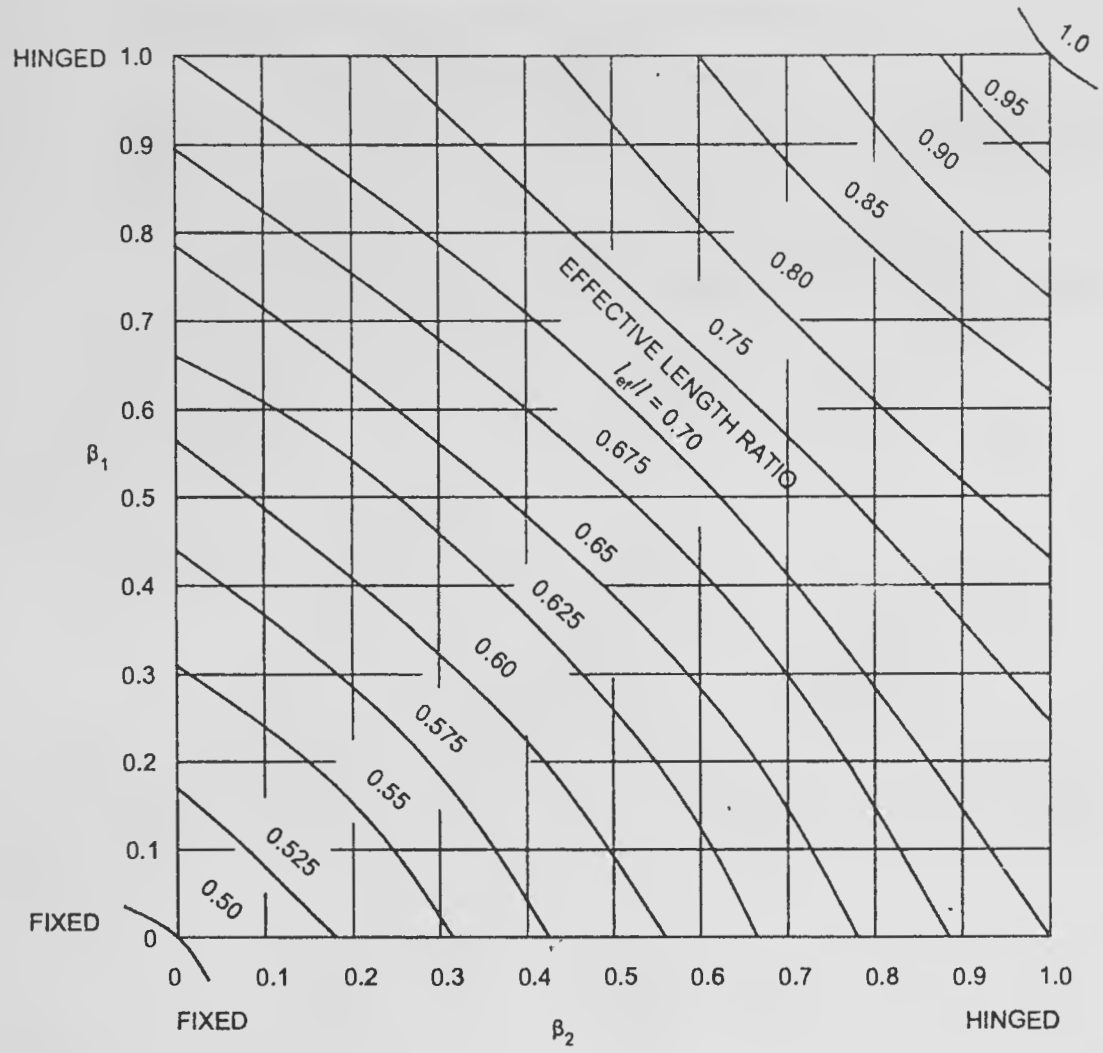

FIG. 32 EFFECTIVE LENGTH RATIOS FOR A COLUMN IN A FRAME WITH NO SWAY

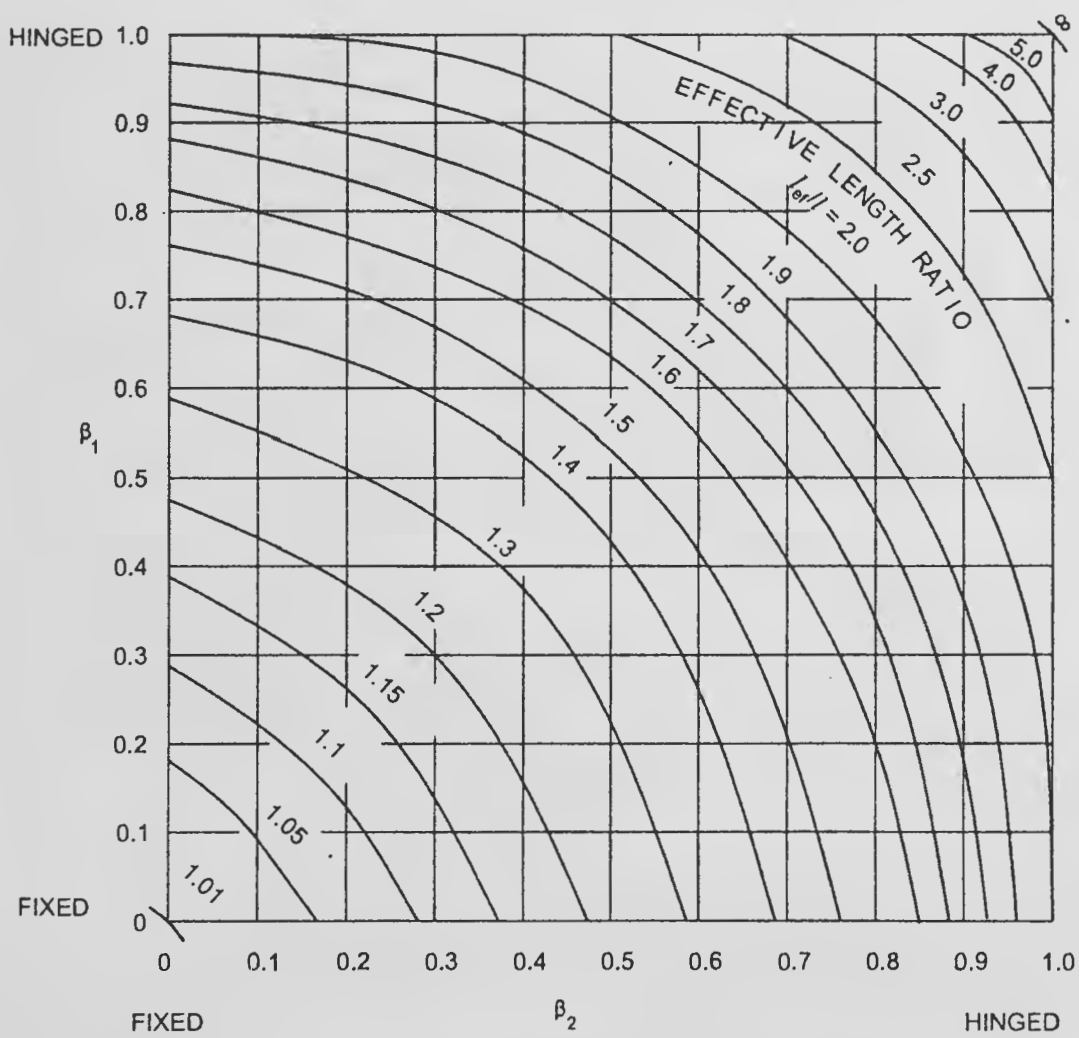

FIG. 33 EFFECTIVE LENGTH RATIOS FOR A COLUMN IN A FRAME WITHOUT RESTRAINT AGAINST SWAY

Table 32 Effective Length of Compession Members

(*Clause* E-3)

Sl No. (1)	Degree of End Restraint of Compression Members (2)	Symbol (3)	Theoretical Value of Effective Length (4)	Recommended Value of Effective Length (5)
i)	Effectively held in position and restrained against rotation at both ends	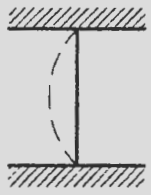	0.50 *l*	0.65 *l*
ii)	Effectively held in position at both ends, restrained against rotation at one end	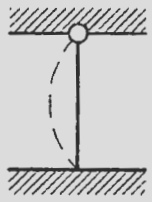	0.70 *l*	0.80 *l*
iii)	Effectively held in position at both ends, but not restrained against rotation	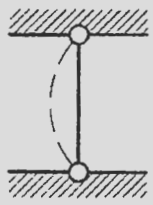	1.00 *l*	1.00 *l*
iv)	Effectively held in position and restrained against rotation at one end, and at the other restrained against rotation but not held in position	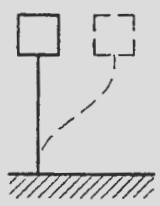	1.00 *l*	1.20 *l*
v)	Effectively held in position and restrained against rotation at one end, and at the other partially restrained against rotation but not held in position	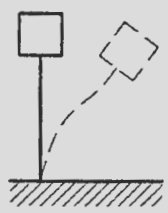	–	1.50 *l*
vi)	Effectively held in position at one end but not restrained against rotation, and at the other end restrained against rotation but not held in position	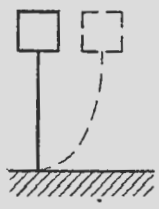	2.00 *l*	2.00 *l*
vii)	Effectively held in position and restrained against rotation at one end but not held in position nor restrained against rotation at the other end	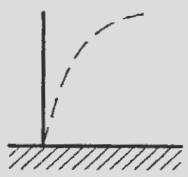	2.00 *l*	2.00 *l*

NOTE – *l* is the unsupported length of compression member.

ANNEX F

(*Clause* 25.1.2)

DUCTILE DESIGN AND DETAILING OF REINFORCED CONCRETE STRUCTURES SUBJECTED TO SEISMIC FORCES

F-1 GENERAL

F-1.1 This annex covers the requirements for designing and detailing of members of reinforced concrete (RC) structures designed to resist lateral effects of earthquake shaking, so as to give them adequate stiffness, strength and ductility to resist severe earthquake shaking without collapse. This annex addresses lateral load resisting structural systems of RC structures composed of,

a) RC moment resisting frames;
b) RC moment resisting frames with unreinforced masonry infill walls;
c) RC moment resisting frames with RC structural walls; and
d) RC structural walls.

F-1.2 Provisions of this annex shall be adopted in all lateral load resisting systems of RC structures located in Seismic Zone III, IV or V. The annex is optional in Seismic Zone II.

F-1.3 The provisions for RC structures given herein apply specifically to monolithic RC construction, and not for precast RC structures. Precast and/or pre stressed concrete members may be used, only if they are designed to provide similar level of ductility as that of monolithic RC structures during or after an earthquake. Likewise, flat slab structures shall have a lateral load resisting system capable of providing similar level of performance as envisioned in this Section and shall be designed for drift compatibility as per **F-10**. Specialist literature shall be referred to for design and construction of such structures. The adequacy of such designs shall be demonstrated by adequate, appropriate experimentation and non-linear dynamic structural analyses.

F-1.4 All RC frames, RC walls and their elements in a structure need not be designed to resist lateral loads and the designer can judiciously identify the lateral load resisting system based on relative stiffness and location in the building and design those members for full lateral force. RC monolithic members assumed not to participate in the lateral force resisting system (*see* **F-2.7**) shall be permitted provided that their effect on the seismic response of the system is accounted for. Consequence of failure of structural and non-structural members not part of the lateral force resisting system shall also be considered in design.

F-2 TERMINOLOGY

For the purpose of this annex, the following definitions shall apply.

F-2.1 Beams — These are members (generally horizontal) of moment resisting frames with flexural and shearing actions.

F-2.2 Boundary Elements — These are portions along the ends of a structural wall that are strengthened by longitudinal and transverse reinforcement. They may have the same thickness as that of the wall web.

F-2.3 Columns — These are members (generally vertical) of moment resisting frames with axial, flexural and shearing actions.

F-2.4 Cover Concrete — It is that concrete which is not confined by transverse reinforcement.

F-2.5 Transverse Reinforcement — It is a continuous bar having a 135° hook with an extension of 6 times diameter (but not < 65 mm) at one end and a hook not less than 90° with an extension of 6 times diameter (but not < 65 mm) at the other end. The hooks shall engage peripheral longitudinal bars. In general, the 90° hooks of two successive crossties engaging the same longitudinal bars shall be alternated end for end. Transverse reinforcement (also called hoops) in columns is typically called stirrups and that in beams is called cross-ties.

F-2.6 Gravity Columns in Buildings — It is a column, which is not part of the lateral load resisting system and designed only for force actions (that is, axial force, shear force and bending moments) due to gravity loads. But, it should be able to resist the gravity loads at lateral displacement imposed by the earthquake forces.

F-2.7 Lateral Force Resisting System — It is that part of the structural system which participates in resisting forces induced by earthquake.

F-2.8 Moment-Resisting Frame — It is a three-dimensional structural system composed of interconnected members, without structural walls, so as to function as a complete self-contained unit with or without the aid of horizontal diaphragms or floor bracing systems, in which the members resist gravity and lateral forces primarily by flexural actions.

F-2.8.1 *Special Moment Resisting Frame (SMRF)* — It is a moment-resisting frame specially detailed to provide ductile behaviour as per the requirements specified in **F-4**, **F-5**, **F-6** and **F-7**.

F-2.8.2 *Ordinary Moment Resisting Frame (OMRF)* — It is a moment-resisting frame not meeting special detailing requirements for ductile behaviour.

F-2.9 Link — It is a single steel bar bent into a closed loop having a 135° hook with an extension of 6 times diameter (but not < 65 mm) at each end, which is embedded in the confined core of the section, and placed normal to the longitudinal axis of the RC beam or column.

F-2.10 Shear Wall (also called Structural Wall) — It is a vertically oriented planar element that is primarily designed to resist lateral force effects (axial force, shear force and bending moment) in its own plane.

F-2.11 Special Shear Wall — It is a structural wall meeting special detailing requirements for ductile behaviour specified in **F-9**.

F-3 SYMBOLS

For the purpose of this annex, the following letter symbols shall have the meaning indicated against each; where other symbols are used, they are explained at the appropriate place. All dimensions in millimetre, loads in Newton and stresses in MPa, unless otherwise specified.

A_e = Effective cross-sectional area of a joint

A_{ej} = Effective shear area of a joint

A_g = Gross cross-sectional area of column, wall

A_h = Horizontal reinforcement area within spacing s_v

A_k = Area of concrete core of column

A_{sd} = Reinforcement along each diagonal of coupling beam

A_{sh} = Area of cross-section of bar forming spiral or link

A_{st} = Area of uniformly distributed vertical reinforcement

A_v = Vertical reinforcement at a joint

b_b = Width of beam

b_c = Width of column

b_j = Effective width of a joint

D = Overall depth of beam

D_k = Diameter of column core measured to the outside of spiral or link

d = Effective depth of member

d_b = Diameter of longitudinal bar

d_w = Effective depth of wall section

E_s = Elastic modulus of steel

f_{ck} = Characteristic compressive strength of concrete cube, in MPa

f_y = Yield stress of steel reinforcing bars, or 0.2 percent proof strength of reinforcing steel, in MPa

h = Longer dimension of rectangular confining link measured to its outer face

h_c = Depth of column

h_j = Effective depth of a joint

h_{st} = Clear storey height

h_w = Overall height of RC structural wall

L_{AB} = Clear span of beam

L_d = Development length of bar in tension

l_o = Length of member over which special confining reinforcement is to be provided

L_w = Horizontal length of wall/longer cross-section dimension of wall

L_s = Clear span of couplings beam

M_u = Design moment of resistance of entire RC beam, column or wall section

M_{c1} = Design moment of resistance of column section

M_{c2} = Design moment of resistance of column section

M_{g1} = Design moment of resistance of beam section

M_{g2} = Design moment of resistance of beam section

M_u^{Ah} = Hogging design moment of resistance of beam at end A

M_u^{As} = Sagging design moment of resistance of beam at end A

M_u^{Bh} = Hogging design moment of resistance of beam at end B

M_u^{Bs} = Sagging design moment of resistance of beam at end B

M_u^{BL} = Design moment of resistance of beam framing into column from the left

M_u^{BR} = Design moment of resistance of beam framing into column from the right

M_{uw} = Design moment of resistance of web of RC structural wall alone

P_u = Factored axial load

s_v = Spacing of links along the longitudinal direction of beam or column

t_w = Thickness of web of RC structural wall

$V_{u,a}^{D+L}$ = Factored shear force demand at end A of beam due to dead and live loads

$V_{u,b}^{D+L}$ = Factored shear force demand at end B of beam due to dead and live loads

V_j = Design shear resistance of a joint

V_u = Factored shear force

V_{us} = Design shear resistance offered at a section by steel links

x_u, x_u^* = Depth of neutral axis from extreme compression fibre

α = Inclination of diagonal reinforcement in coupling beam

ρ = Area of longitudinal reinforcement as a fraction of gross area of cross-section in a RC beam, column or structural wall

ρ_c = Area of longitudinal reinforcement on the compression face of a beam as a fraction of gross area of cross-section

$(\rho_h)_{min}$ = Minimum area of horizontal reinforcement of a structural wall as a fraction of gross area of cross-section

$(\rho_{v,be})_{min}$ = Minimum area of vertical reinforcement in each boundary element of a structural wall as a fraction of gross area of cross-section of each boundary element

$(\rho_{v,net})_{min}$ = Minimum area of vertical reinforcement of a structural wall as a fraction of gross area of cross-section of the wall

$(\rho_{v,web})_{min}$ = Minimum area of vertical reinforcement in web of a structural wall as a fraction of gross area of cross-section of web

ρ_{max} = Maximum area of longitudinal reinforcement permitted on the tension face of a beam as a fraction of gross area of cross-section

ρ_{min} = Minimum area of longitudinal reinforcement to be ensured on the tension face of a beam as a fraction of gross area of cross-section

τ_c = Design shear strength of concrete

$\tau_{c,max}$ = Maximum nominal shear stress permitted at a section of RC beam, column or structural wall

τ_v = Nominal shear stress at a section of RC beam, column or structural wall

F-4 GENERAL SPECIFICATIONS

F-4.1 The design and construction of reinforced concrete buildings shall be governed by provisions of this Subsection 5A, except as modified by the provisions of this annex for those elements participating in lateral force resistance.

F-4.2 Minimum grade of structural concrete shall be M 20, but M 25 for buildings,

a) more than 15 m in height in Seismic Zones III, IV and V; and

b) but not less than that required by provisions of Subsection 5A based on exposure conditions.

F-4.3 Steel reinforcement resisting earthquake-induced forces in RC frame members and in boundary elements of RC structural walls shall comply with **F-4.3.1** to **F-4.3.3**.

F-4.3.1 Steel reinforcements used shall be,

a) of grade Fe 415 or less {conforming to accepted standard [6-5A(36)]}; and

b) of grade Fe 500 and Fe 550, that is; high strength deformed steel bars produced by thermo-mechanical treatment process having elongation more than 14.5 percent, and conforming to accepted standard [6-5A(36)].

F-4.3.2 The actual 0.2 percent proof strength of steel bars based on tensile test shall not exceed their characteristic 0.2 percent proof strength by more than 20 percent.

F-4.3.3 The ratio of the actual ultimate strength to the actual 0.2 percent proof strength shall be at least 1.15.

F-4.4 In RC frame buildings, lintel beams shall preferably not be integrated into the columns to avoid short column effect. When integrated, they shall be included in the analytical model for structural analysis. Similarly, plinth beams (where provided), and staircase beams and slabs framing into columns shall be included in the analytical model for structural analysis.

F-4.5 RC regular moment-resisting frame buildings shall have planar frames oriented along the two principal plan directions of buildings. Irregularities listed under **5** of Part 6 'Structural Design, Section 1 Loads, Forces and Effects' of the Code shall be avoided. Buildings with any of the listed irregularities perform poorly during earthquake shaking; in addition, buildings with floating columns and set-back columns also perform poorly. When any such irregularities are adopted, detailed nonlinear analyses shall be performed to demonstrate that there is no threat to loss of life and property.

F-5 BEAMS

F-5.1 General

Requirements of this section shall apply to beams resisting earthquake-induced effects, in which the

factored axial compressive stress does not exceed $0.08 f_{ck}$. Beams, in which the factored axial compressive stress exceeds $0.08 f_{ck}$, shall be designed as per requirements of **F-6**.

F-5.1.1 Beams shall preferably have width-to-depth ratio of more than 0.3.

F-5.1.2 Beams shall not have width less than 200 mm.

F-5.1.3 Beams shall not have depth *D* more than 1/4th of clear span. This may not apply to the floor beam of frame staging of elevated RC water tanks.

F-5.1.4 Width of beam b_w shall not exceed the width of supporting member c_2 plus distance on either side of supporting member equal to the smaller of (a) and (b) below:

a) Width of supporting member c_2.

b) 0.75 times breadth of supporting member c_1 (*see* Fig. 34A and Fig. 34B).

Transverse reinforcement for the width of a beam that exceeds width of the column c_2 shall be provided as shown in Fig. 34B throughout the beam span including within the beam column joint.

F-5.2 Longitudinal Reinforcement

F-5.2.1 The longitudinal reinforcement in beams shall be as below:

a) Beams shall have at least two 12 mm diameter bars each at the top and bottom faces.

b) Minimum longitudinal steel ratio ρ_{min} required on any face at any section is:

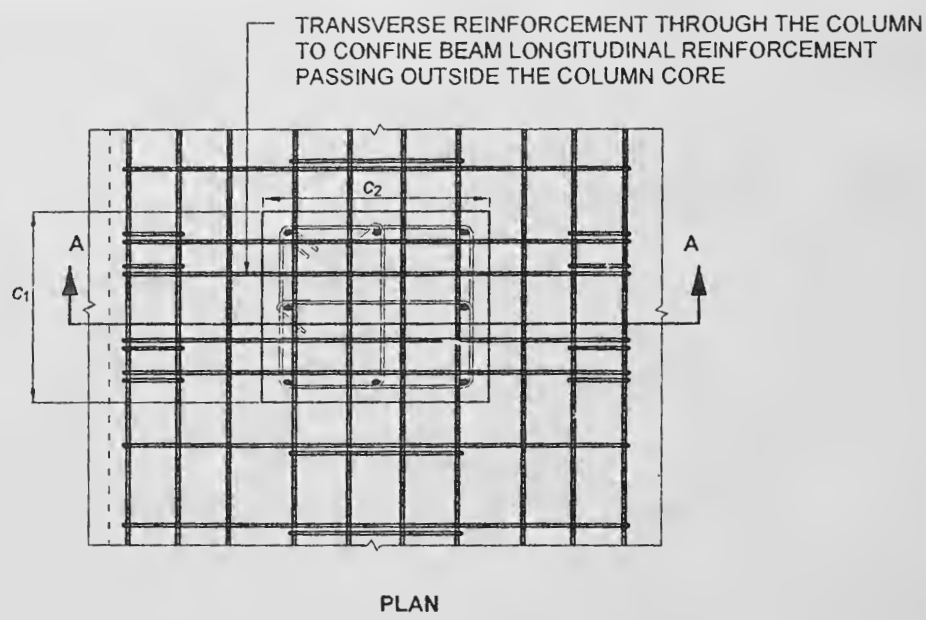

34A PLAN VIEW OF A BEAM COLUMN JOINT SHOWING EFFECTIVE BREADTH AND WIDTH OF JOINT

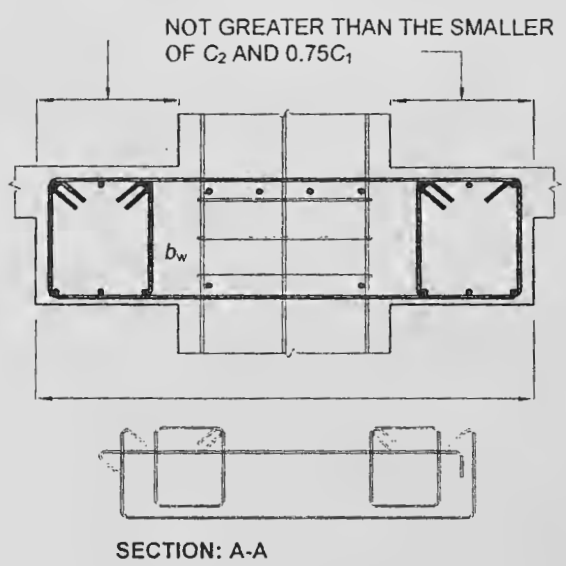

34B MAXIMUM EFFECTIVE WIDTH OF WIDE BEAM AND REQUIRED TRANSVERSE REINFORCEMENT

FIG. 34 BEAM COLUMN JUNCTIONS

$$\rho_{min} = 0.24 \frac{\sqrt{f_{ck}}}{f_y}$$

F-5.2.2 Maximum longitudinal steel ratio ρ_{max} provided on any face at any section is 0.025.

F-5.2.3 Longitudinal steel on bottom face of a beam framing into a column (at the face of the column) shall be at least half the steel on its top face at the same section. At exterior joints, the anchorage length calculation shall consider this bottom steel to be tension steel.

F-5.2.4 Longitudinal steel in beams at any section on top or bottom face shall be at least 1/4th of longitudinal steel provided at the top face of the beam at the face of the column; when the top longitudinal steel in the beam at the two supporting column faces is different, the larger of the two shall be considered.

F-5.2.5 At an exterior joint, top and bottom bars of beams shall be provided with anchorage length beyond the inner face of the column, equal to development length of the bar in tension plus 10 times bar diameter minus the allowance for 90° bends (*see* Fig. 35).

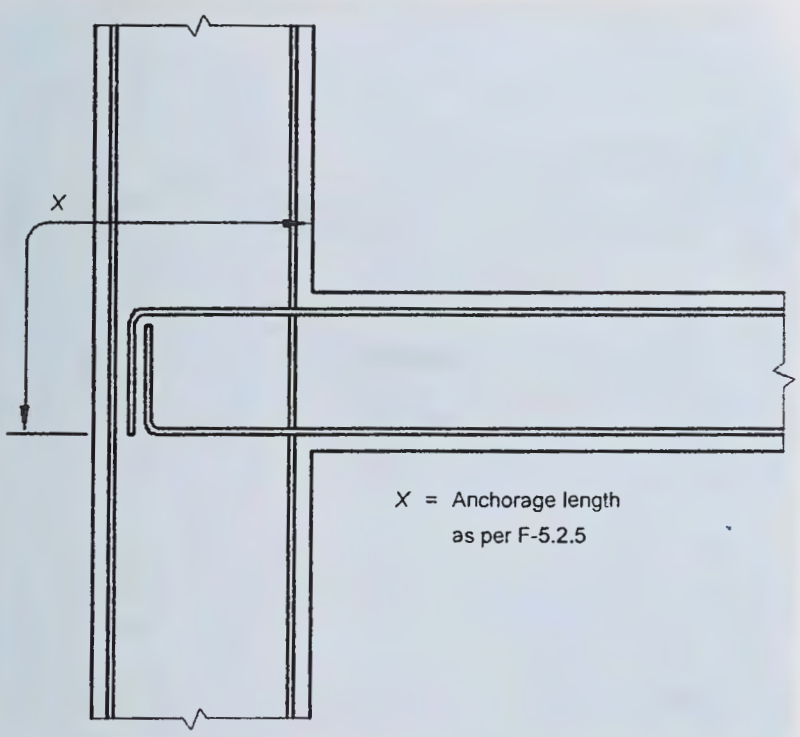

FIG. 35 ANCHORAGE OF LONGITUDINAL BEAM BARS AT EXTERIOR BEAM-COLUMN JOINT

F-5.2.6 *Splicing of Longitudinal Bars*

F-5.2.6.1 *Lap splices*

When adopted, closed links shall be provided over the entire length over which the longitudinal bars are spliced. Further,

a) the spacing of these links shall not exceed 150 mm (*see* Fig. 36).

b) the lap length shall not be less than the development length of the largest longitudinal reinforcement bar in tension.

c) lap splices shall not be provided,

   1) within a joint ;

   2) within a distance of 2*d* from face of the column; and

   3) within a quarter length of the beam adjoining the location where flexural yielding may occur under earthquake effects.

d) not more than 50 percent of area of steel bars on either top or bottom face shall be spliced at any one section.

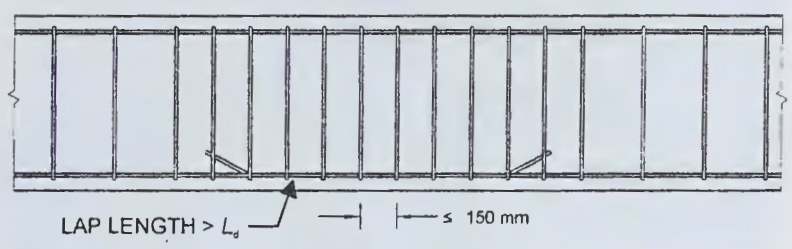

FIG. 36 LAP LENGTH AT LOCATION OF SPLICING OF LONGITUDINAL BARS IN BEAM

F-5.2.6.2 *Mechanical couplers*

Mechanical couplers {conforming to accepted standard [6-5A(38)]} shall be used when longitudinal steel bars have to be continued for beam spans larger than their manufacture lengths. Further,

a) only those mechanical splices conforming to the above code and capable of developing the specified tensile strength of spliced bar shall be permitted within a distance equal to two times the depth of the member from the member face or in any location where yielding of reinforcement is likely to take place; and

b) the spacing between adjacent longitudinal bars shall be based also on the outer size of the coupler to allow easy flow of concrete.

F-5.2.6.3 *Welded splices*

Welded splices shall not be used in beams for a distance equal to two times the depth of the member from the member face or in any location where yielding of reinforcement is likely to take place. At any location, not more than 50 percent of area of steel bars shall be spliced at any one section.

Welding of links, ties, inserts or other similar elements to vertical reinforcement bars required as per design is not permitted, in any seismic zone.

F-5.3 Transverse Reinforcement

F-5.3.1 Only vertical links shall be used in beams (*see* Fig. 37A); inclined links shall not be used; and,

a) in normal practice, a link is made of a single

bent bar. But, it may be made of two bars also, namely a U-link with a 135° hook with an extension of 6 times diameter (but not less than 65 mm) at each end, embedded in the core concrete, and a cross-tie (*see* Fig. 37B).

b) the hooks of the links and cross-ties shall engage around peripheral longitudinal bars. Consecutive crossties engaging the same longitudinal bars shall have their 90° hooks at opposite sides of the beam. When the longitudinal reinforcement bars are secured by cross-ties in beams that have a slab on one side, the 90° hooks of the cross-ties shall be placed on that side.

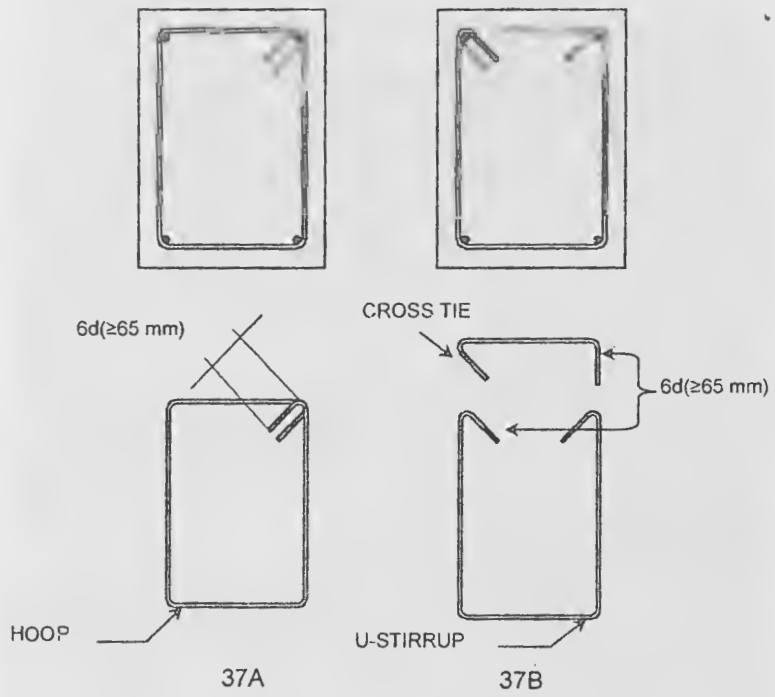

FIG. 37 DETAILS OF TRANSVERSE REINFORCEMENT IN BEAMS

F-5.3.2 The minimum diameter of a link shall be 8 mm.

F-5.3.3 Shear force capacity of a beam shall be more than larger of,

a) factored shear force as per linear structural analysis; and

b) factored gravity shear force, plus equilibrium shear force when plastic hinges are formed at both ends of the beam (*see* Fig. 38) given by :

1) For sway to right:

$$V_{u,a} = V_{u,a}^{D+L} - 1.4\,\frac{M_u^{As} + M_u^{Bh}}{L_{AB}} \text{ and}$$

$$V_{u,b} = V_{u,b}^{D+L} + 1.4\,\frac{M_u^{As} + M_u^{Bh}}{L_{AB}}.$$

2) For sway to left:

$$V_{u,a} = V_{u,a}^{D+L} - 1.4\,\frac{M_u^{Ah} + M_u^{Bs}}{L_{AB}} \text{ and}$$

$$V_{u,b} = V_{u,b}^{D+L} + 1.4\,\frac{M_u^{Ah} + M_u^{Bs}}{L_{AB}}$$

where M_u^{As}, M_u^{Ah}, M_u^{Bs} and M_u^{Bh} are sagging and hogging moments of resistance of the beam section at ends *A* and *B*, respectively. These shall be calculated as per this Subsection 5A. L_{AB} is clear span of the beam. $V_{u,a}^{D+L}$ and $V_{u,b}^{D+L}$ are the factored shear forces at ends *A* and *B*, respectively, due to vertical loads acting on the span; the partial safety factor for dead and live loads shall be 1.2, and the beam shall be considered to be simply supported for this estimation.

The design shear force demand at end *A* of the beam shall be the larger of the two values of $V_{u,a}$ computed above. Similarly, the design shear force demand at end *B* shall be the larger of the two values of $V_{u,b}$ computed above.

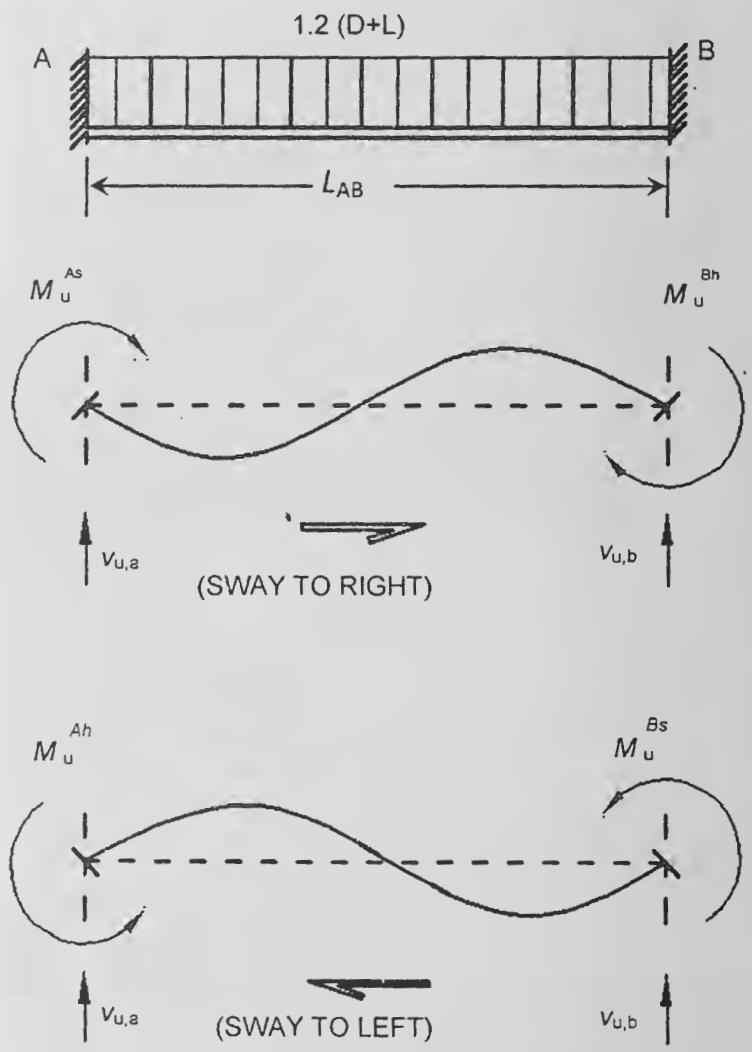

FIG. 38 CALCULATION OF DESIGN SHEAR FORCE DEMAND ON BEAMS UNDER PLASTIC HINGE ACTION AT THEIR ENDS

F-5.3.4 In the calculation of design shear force capacity of RC beams, contributions of the following shall not be considered:

a) Bent up bars,

b) Inclined links, and

c) Concrete in the RC section.

F-5.3.5 *Close Spacing of Links*

Spacing of links over a length of $2d$ at either end of a beam shall not exceed,

a) $d/4$;

b) 8 times the diameter of the smallest longitudinal bar; and

c) 100 mm (*see* Fig. 39).

F-5.3.5.1 The first link shall be at a distance not exceeding 50 mm from the joint face.

F-5.3.5.2 Closely spaced links shall be provided over a length equal to $2d$ on either side of a section where flexural yielding may occur under earthquake effects. Over the remaining length of the beam, vertical links shall be provided at a spacing not exceeding $d/2$.

F-6 COLUMNS AND INCLINED MEMBERS

F-6.1 Geometry

Requirements of this section shall apply to columns and inclined members resisting earthquake-induced effects, in which the factored axial compressive stress due to gravity and earthquake effects exceeds $0.08 f_{ck}$. The factored axial compressive stress considering all load combinations relating to seismic loads shall be limited to $0.40 f_{ck}$ in all such members, except in those covered in **10**.

For various shapes of columns other than rectangular and circular like 'T' shaped, 'X' shaped, etc. Appropriate designs and detailing shall be carried out using specialist literature where such columns are part of lateral load resisting systems.

F-6.1.1 The minimum dimension of a column shall not be less than,

a) $20\ d_b$, where d_b is diameter of the largest diameter longitudinal reinforcement bar in the beam passing through or anchoring into the column at the joint, or

b) 300 mm (*see* Fig. 40).

F-6.1.2 The cross-section aspect ratio (that is, ratio of smaller dimension to larger dimension of the cross-section of a column or inclined member) shall not be less than 0.45. Vertical members of RC buildings whose cross-section aspect ratio is less than 0.4 shall be designed as per requirements of **F-8**.

F-6.2 Relative Strengths of Beams and Columns at a Joint

F-6.2.1 At each beam-column joint of a moment-resisting frame, the sum of nominal design strength of columns meeting at that joint (with nominal strength calculated for the factored axial load in the direction of the lateral force under consideration so as to give

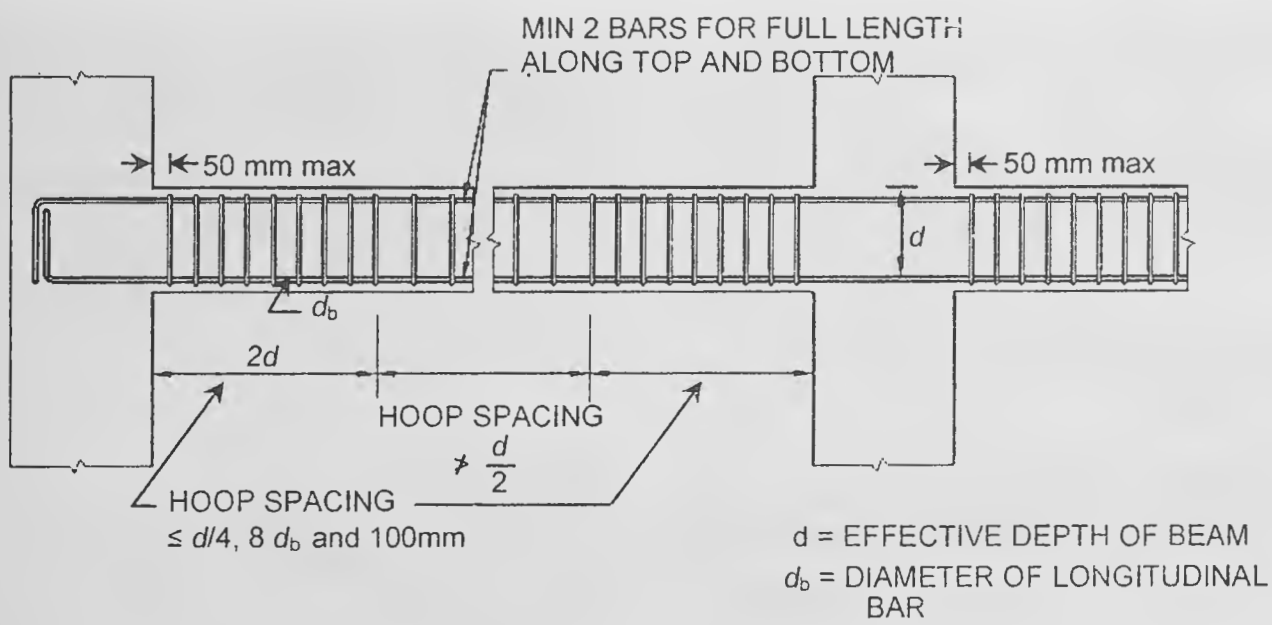

FIG. 39 DETAILS OF TRANSVERSE REINFORCEMENT IN BEAMS

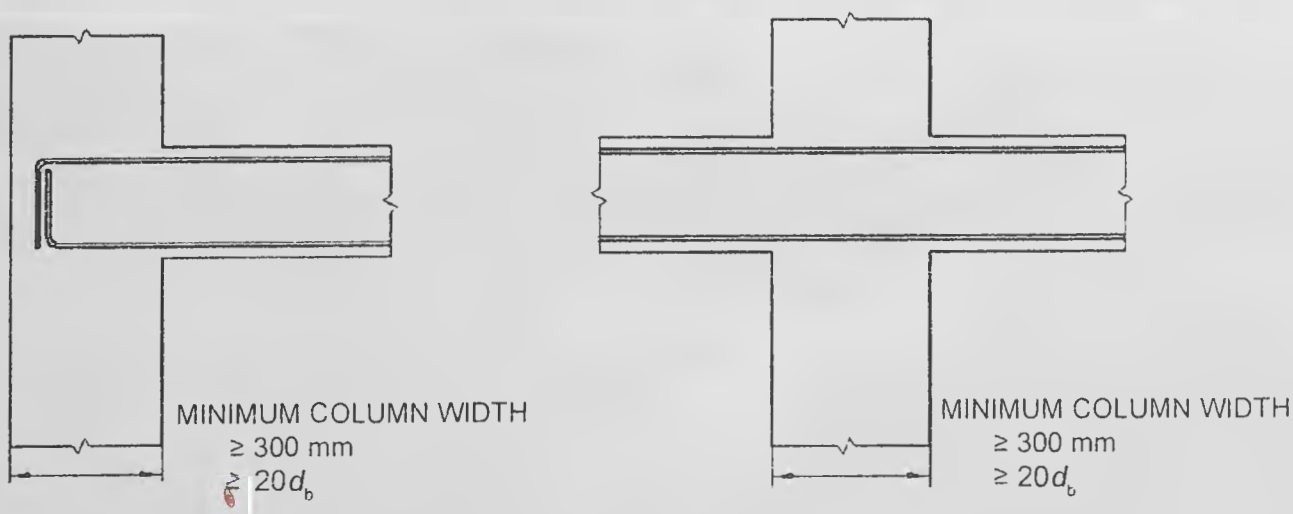

FIG. 40 MINIMUM SIZE OF RC COLUMNS BASED ON DIAMETER OF LARGEST LONGITUDINAL REINFORCEMENT BAR IN BEAMS FRAMING INTO IT

least column nominal design strength) along each principal plane shall be at least 1.4 times the sum of nominal design strength of beams meeting at that joint in the same plane (*see* Fig. 41).

In the event of a beam-column joint not conforming to above, the columns at the joint shall be considered to be gravity columns only and shall not be considered as part of the lateral load resisting system.

F-6.2.1.1 The design moments of resistance of a beam shall be estimated based on the principles of mechanics and the limiting strain states of the limit state design method enunciated in this Subsection 5A. The design moment of resistance of a column shall be estimated as in case of beams corresponding to zero axial force on the design *P-M* interaction diagram.

F-6.2.1.2 This check shall be performed at each joint for both positive and negative directions of shaking in the plane under consideration. Further, in this check, design moments of resistance in beam(s) meeting at a joint shall be considered in the same direction, and similarly the design moments of resistance of column(s) at the same joint shall be considered to be in the direction opposite to that of the moments in the beams.

F-6.2.1.3 This check shall be waived at all joints at roof level only, in buildings more than 4 storeys tall.

The provisions of **F-6.2** are not applicable for flat slab structures.

F-6.3 Longitudinal Reinforcement

F-6.3.1 Circular columns shall have minimum of 6 bars.

F-6.3.2 *Splicing of Longitudinal Bars*

F-6.3.2.1 *Lap splices*

When adopted, closed links shall be provided over the entire length over which the longitudinal bars are spliced. Further,

a) the spacing of these links shall not exceed 100 mm.
b) the lap length shall not be less than the development length of the largest longitudinal reinforcement bar in tension.
c) lap splices shall be provided only in the central half of clear column height, and not
   1) within a joint, or
   2) within a distance of 2*d* from face of the beam.
d) not more than 50 percent of area of steel bars shall be spliced at any one section.
e) lap splices shall not be used for bars of diameter larger than 32 mm for which mechanical splicing shall be adopted,

F-6.3.2.2 *Mechanical couplers*

Mechanical couplers {*see* accepted standard [6-5A(38)]} shall be used. Further, only those mechanical splices conforming to the above standard and capable of developing the specified tensile strength of spliced bar shall be permitted within a distance equal to two times the depth of the member from the column face in any location where yielding of reinforcement is likely to take place.

F-6.3.2.3 *Welded splices*

Welded splices shall not be used in columns for a distance equal to two times the depth of the member from the member face or in any location where yielding of reinforcement is likely to take place. At any location, not more than 50 percent of area of steel bars shall be spliced at any one section. But, welding of links, ties, inserts or other similar elements to vertical reinforcement bars required as per design is not permitted, in any seismic zone.

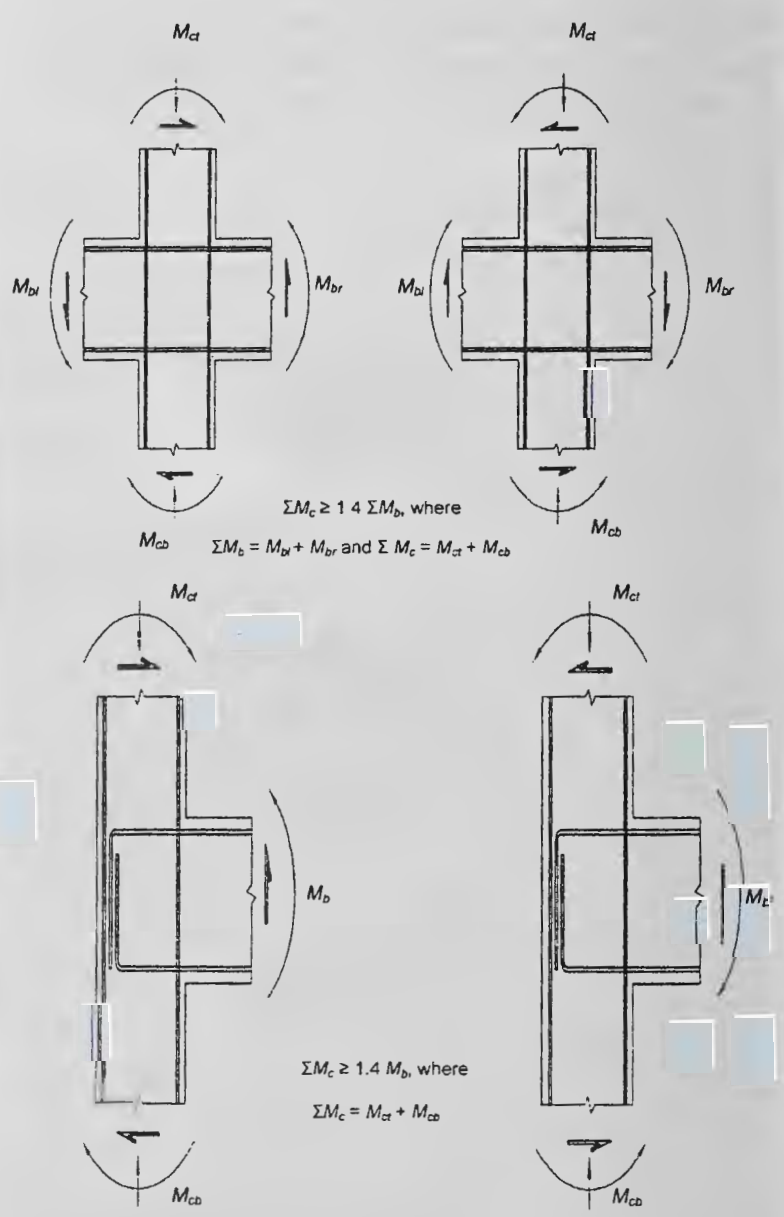

FIG. 41 STRONG COLUMN – WEAK BEAM

F-6.3.3 A column that extends more than 100 mm beyond the confined core owing to architectural requirement (*see* Fig. 42) shall be detailed in the following manner:

a) When the contribution of this area is considered in the estimate of strength of columns, it shall have at least the minimum longitudinal and transverse reinforcement given in this Subsection 5A.

b) When the contribution of this area is not considered in the estimate of strength of columns, it shall have at least the minimum longitudinal and transverse reinforcement given in this Subsection 5A.

F-6.4 Transverse Reinforcement

F-6.4.1 Transverse reinforcement shall consist of closed loop,

a) spiral or circular links in circular columns, and

b) rectangular links in rectangular columns.

In either case, the closed link shall have 135° hook ends with an extension of 6 times its diameter (but not < 65 mm) at each end, which are embedded in the confined core of the column (*see* Fig. 43A).

F-6.4.2 When rectangular links are used,

a) the minimum diameter permitted of transverse reinforcement bars is 8 mm, when diameter of longitudinal bar is less than or equal to 32 mm, and 10 mm, when diameter of longitudinal bar is more than 32 mm;

b) the maximum spacing of parallel legs of links shall be 300 mm centre-to-centre;

c) a cross-tie shall be provided, if the length of any side of the link exceeds 300 mm (*see* Fig. 43B); the cross-tie shall be placed perpendicular to this link whose length exceeds 300 mm. Alternatively, a pair of overlapping links may be provided within the column (*see* Fig. 43C). In either case, the hook ends of the links and cross-ties shall engage around peripheral longitudinal bars. Consecutive cross-ties engaging the same longitudinal bars shall have their 90° hooks on opposite sides of the column. Crossties of the same or smaller bar size as the hoops shall be permitted; and,

d) the maximum spacing of links shall be half the least lateral dimension of the column, except where special confining reinforcement is provided as per **F-7**.

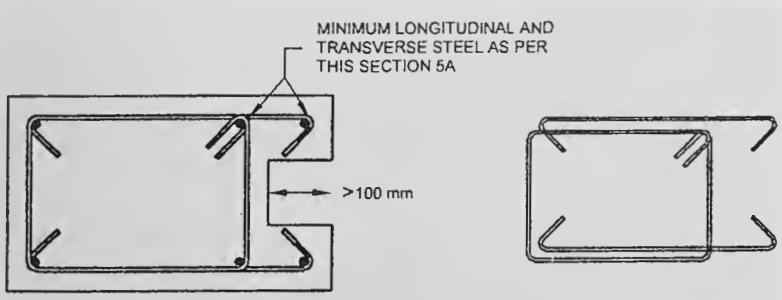

FIG. 42 REINFORCEMENT REQUIREMENT IN COLUMNS WITH PROJECTION MORE THAN 100 mm BEYOND CORE

F-6.5 Design Shear Force in Columns

The design shear force demand on columns is the larger of,

a) factored shear force demand as per linear structural analysis; and

b) factored equilibrium shear force demand when plastic hinges are formed at both ends of the beams given by:

1) For sway to right:

$$V_u = 1.4\frac{\left(M_u^{As} + M_u^{Bh}\right)}{h_{st}},$$

2) For sway to left:

$$V_u = 1.4\frac{\left(M_u^{Ah} + M_u^{Bs}\right)}{h_{st}},$$

where M_u^{As}, M_u^{Ah}, M_u^{Bs} and M_u^{Bh} are design sagging and hogging moments of resistance of beams framing into the column on opposite faces *A* and *B*, respectively, with one hogging moment and the other sagging (*see* Fig. 44); and h_{st} the storey height. The design moments of resistance of beam sections shall be calculated as per this Subsection 5A.

F-6.5.1 The calculation of design shear force capacity of RC columns shall be calculated as per this Subsection 5A.

F-7 SPECIAL CONFINING REINFORCEMENT

The requirements of this section shall be met with in beams and columns, unless a larger amount of transverse reinforcement is required from shear strength considerations given in **F-5.3.3** for beams and **F-6.5** for columns.

F-7.1 Flexural yielding is likely in beams during strong earthquake shaking and in columns when the shaking intensity exceeds the expected intensity of earthquake shaking (*see* Fig. 45). This special confining reinforcement shall,

a) be provided over a length l_o from the face of the joint towards mid-span of beams and mid heights of columns, on either side of the joint; where l_o is not less than,

1) larger lateral dimension of the member at the section where yielding occurs,

2) 1/6 of clear span of the member; or

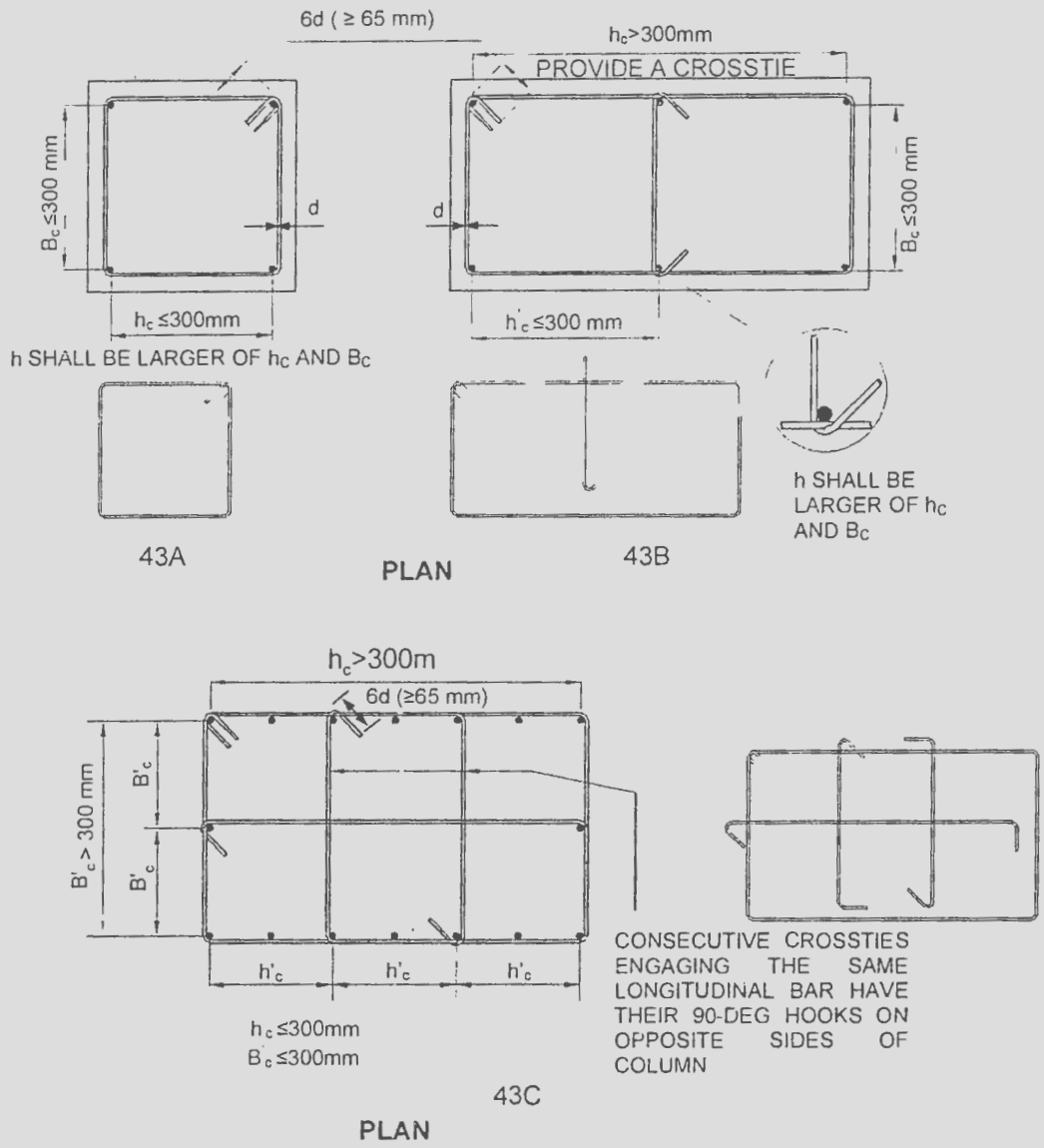

FIG. 43 DETAIL OF TRANSVERSE REINFORCEMENT IN COLUMNS

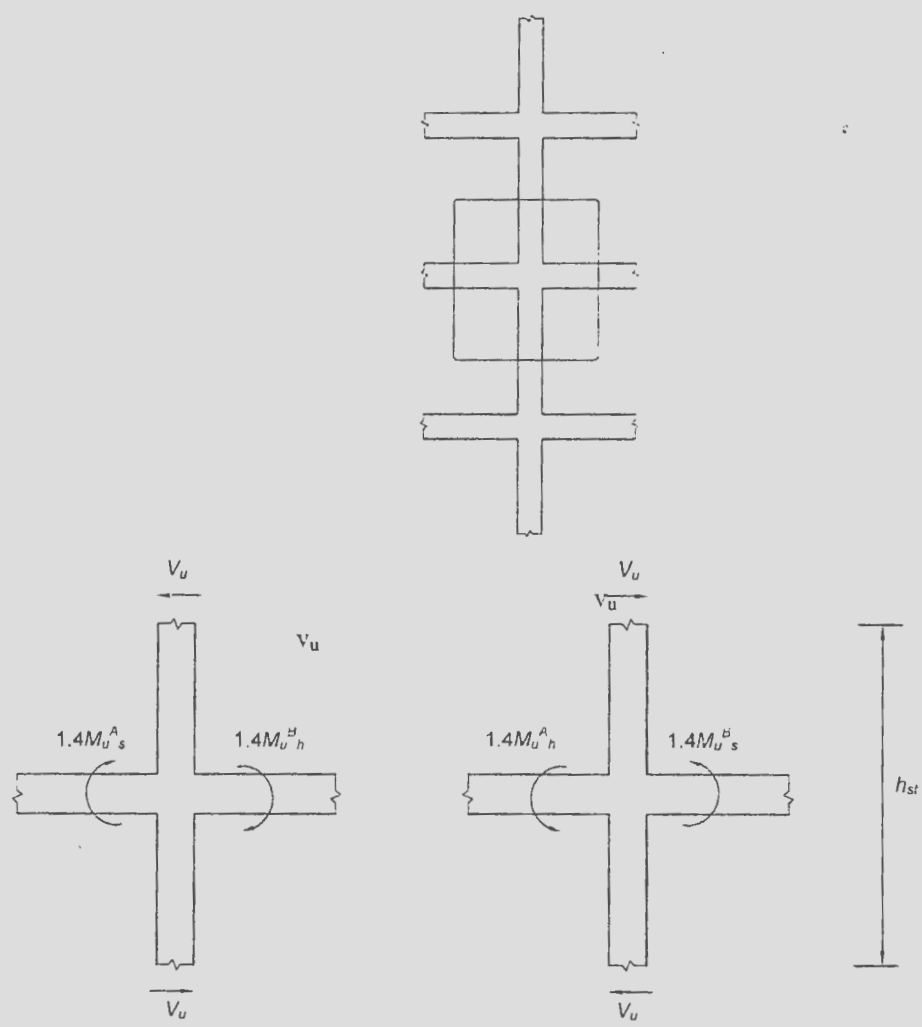

FIG. 44 EQUILIBRIUM DESIGN SHEAR FORCE DEMAND ON COLUMN WHEN PLASTIC HINGES ARE FORMED AT BEAM ENDS

3) 450 mm.

b) have a spacing not more than,

1) 1/4 of minimum member dimension of the beam or column;

2) 6 times diameter of the smallest longitudinal reinforcement bars; and

3) 100 mm link.

c) have area A_{sh} of cross-section of the bar forming links or spiral of at least:

1) in circular links or spirals:

A_{sh} = Maximum of

$$\left[\begin{array}{l} 0.09\, s_v D_k \dfrac{f_{ck}}{f_y}\left(\dfrac{A_g}{A_k}-1\right) \text{and} \\ 0.024\, s_v D_k \dfrac{f_{ck}}{f_y} \end{array}\right.$$

where

s_v = pitch of spiral or spacing of links,

D_k = diameter of core of circular column measured to outside of spiral/link,

f_{ck} = characteristic compressive strength of concrete cube,

f_y = 0.2 percent proof strength of transverse steel reinforcement bars,

A_g = gross area of column cross-section, and

A_k = area of concrete core of column

$$= \frac{\pi}{4} D_k^2$$

2) in rectangular links:

A_{sh} = Maximum of

$$\left[\begin{array}{l} 0.18\, s_v h \dfrac{f_{ck}}{f_y}\left(\dfrac{A_g}{A_k}-1\right) \\ 0.05\, s_v h \dfrac{f_{ck}}{f_y} \end{array}\right.$$

where

h = longer dimension of rectangular link measured to its outer face, which does not exceed 300 mm (*see* Fig. 43B), and

A_k = area of confined concrete core in rectangular link measured to its outer dimensions.

h of the link could be reduced by introducing crossties (*see* Fig. 43C). In such cases, A_k shall be measured as overall core area, regardless of link arrangement. Hooks of cross-ties shall engage peripheral longitudinal bars.

F-7.2 When a column terminates into a footing or mat, special confining reinforcement shall extend at least 300 mm into the footing or mat (*see* Fig. 46).

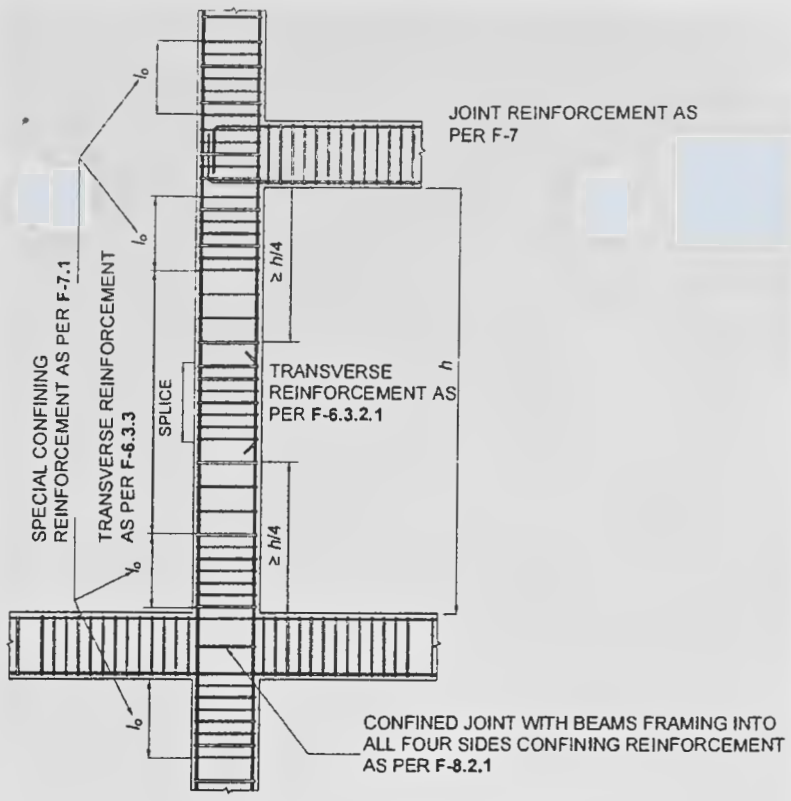

FIG. 45 COLUMN AND JOINT DETAILING

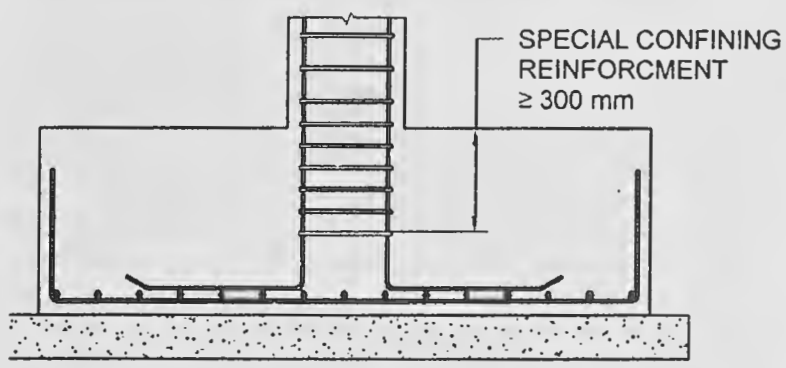

FIG. 46 PROVISION OF SPECIAL CONFINING REINFORCEMENT IN FOOTING

F-7.3 When the calculated point of contra-flexure, under the effect of gravity and earthquake effects, is not within the middle half of the member clear height, special confining reinforcement shall be provided over the full height of the column.

F-7.4 Special confining reinforcement shall be provided over the full height of a column which has significant variation in stiffness along its height. This variation in stiffness may result due to abrupt changes in cross-section size, or unintended restraint to the column provided by stair-slab, mezzanine floor, plinth or lintel beams framing into the columns, RC wall or masonry wall adjoining column and extending only for partial column height.

F-7.5 Columns supporting reactions from discontinued stiff members, such as walls, shall be provided with special confining reinforcement over their full height. (*see* Fig. 47). This reinforcement shall also be placed above the discontinuity for at least the development length of the largest longitudinal bar in the column.

Where the column is supported on a wall, this reinforcement shall be provided over the full height of the column; it shall also be provided below the discontinuity for the same development length.

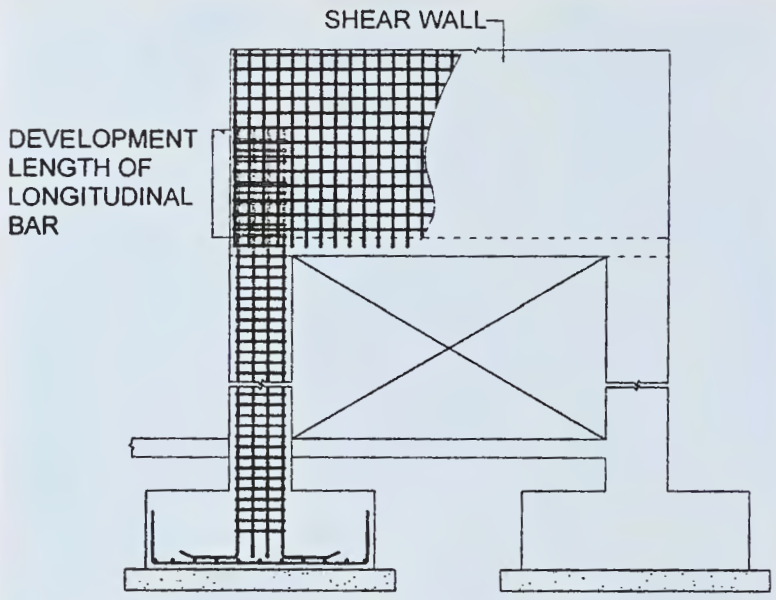

FIG. 47 COLUMNS WITH VARIABLE STIFFNESS

F-8 BEAM-COLUMN JOINTS OF MOMENT-RESISTING FRAMES

F-8.1 Design of Beam-Column Joint for Distortional Shear

F-8.1.1 *Shear Strength of Concrete in a Joint*

The nominal shear strength τ_{jc} of concrete in a beam-column joint shall be taken as:

$$\tau_{jc} = \begin{cases} 1.5\ A_{ej}\sqrt{f_{ck}} & \text{for joints confined by beams on all four faces} \\ 1.2\ A_{ej}\sqrt{f_{ck}} & \text{for joints confined by beams on three faces} \\ 1.0\ A_{ej}\sqrt{f_{ck}} & \text{for other joints} \end{cases}$$

where A_{ej} is effective shear area of joint given by $b_j w_j$, in which b_j is the effective breadth of joint perpendicular to the direction of shear force and w_j the effective width of joint along the direction of shear force. The effective width of joint b_j (*see* Fig. 48) shall be obtained from following:

$$\min\ [b_b;\ b_c + 0.5h_c] \text{ if } b_c < b_b$$

where

b_b = width of beam. b_c = width of column.

h_c = Depth of column in considered direction.

F-8.1.2 *Design Shear Stress Demand on a Joint*

a) Design shear stress demand acting horizontally along each of the two principal plan directions of the joint shall be estimated from earthquake shaking considered along each of these directions, using,

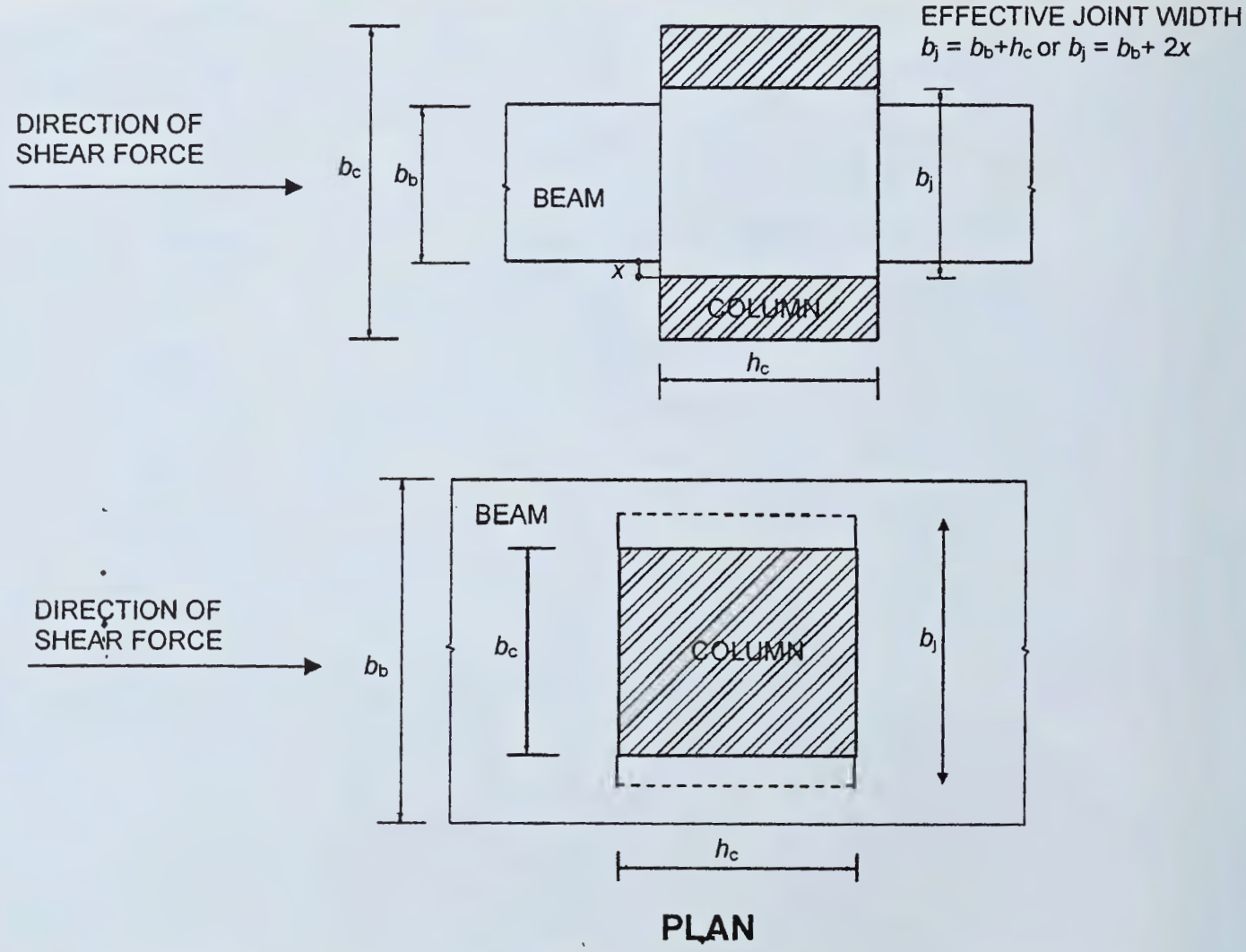

FIG. 48 PLAN VIEW OF A BEAM COLUMN JOINT SHOWING EFFECTIVE BREADTH AND WIDTH OF JOINT

$$\tau_{jdX} = \frac{V_{djX}}{b_j w_j}$$ for shaking along plan direction X of earthquake shaking,

$$\tau_{jdY} = \frac{V_{djY}}{b_j w_j}$$ for shaking along plan direction Y of earthquake shaking

It shall be ensured that the joint shear capacity of joint concrete estimated using **F-8.1.1** exceeds both τ_{jdX} and τ_{jdY}.

b) Design shear force demands V_{jdX} and V_{jdY} acting horizontally on the joint in principal plan directions X and Y shall be estimated considering that the longitudinal beam bars in tension reach a stress of $1.25 f_y$ (when over strength plastic moment hinges are formed at beam ends).

F-8.1.3 *Width of Beam Column Joint*

When beam reinforcement extends through beam-column joint, the minimum width of the column parallel to beam shall be 20 times the diameter of the largest longitudinal beam bar.

F-8.2 Transverse Reinforcement

F-8.2.1 *Confining Reinforcement in Joints*

a) When all four vertical faces of the joint are having beams framing into them covering at least 75 percent of the width on each face,
   1) At least half the special confining reinforcement required as per **F-7** at the two ends of columns, shall be provided through the joint within the depth of the shallowest beam framing into it; and
   2) Spacing of these transverse links shall not exceed 150 mm.

b) When all four vertical faces of the joint are not having beams framing into them or when all four vertical faces have beams framing into them but do not cover at least 75 percent of the width on any face,
   1) special confining reinforcement required as per **F-7** at the two ends of columns shall be provided through the joint within the depth of the shallowest beam framing into it, and
   2) spacing of these transverse links shall not exceed 150 mm.

F-8.2.2 In the exterior and corner joints, all 135° hooks of cross-ties should be along the outer face of columns.

F-9 SPECIAL SHEAR WALLS

F-9.1 General Requirements

F-9.1.1 The requirements of this clause apply to special shear walls that are part of lateral force resisting system of earthquake-resistant RC buildings.

F-9.1.2 The minimum thickness of special shear walls shall not be less than,

a) 150 mm; and

b) 300 mm for buildings with coupled shear walls in any seismic zone.

The minimum thickness provided shall conform to the fire resistance requirements based on occupancy as laid down in this Subsection 5A.

F-9.1.3 The minimum ratio of length of wall to its thickness shall be 4.

F-9.1.4 Special shear walls shall be classified as squat, intermediate or slender depending on the overall height h_w to Length L_w ratio as:

a) Squat walls: $h_w/L_w < 1$,

b) Intermediate walls: $1 \le h_w/L_w \le 2$, and

d) Slender walls: $h_w/L_w > 2$.

F-9.1.5 In the design of flanged wall sections, only that part of the flange shall be considered which extends beyond the face of the web of the structural wall at least for a distance equal to smaller of,

a) actual width available ;

b) half the distance to the adjacent structural wall web; and

c) 1/10th of the total wall height.

F-9.1.6 Special shear walls shall be provided with uniformly spaced reinforcement in its cross-section along vertical and horizontal directions. At least a minimum area of reinforcement bars as indicated in Table 33 shall be provided along vertical and horizontal directions.

F-9.1.7 Reinforcement bars shall be provided in two curtains within the cross-section of the wall, with each curtain having bars running along vertical and horizontal directions, when,

a) factored shear stress demand in the wall exceeds $0.25\sqrt{f_{ck}}$ MPa; or

b) wall thickness is 200 mm or higher.

When steel is provided in two layers, all vertical steel bars shall be contained within the horizontal steel bars; the horizontal bars shall form a closed core concrete area with closed loops and cross-ties.

F-9.1.8 The largest diameter of longitudinal steel bars used in any part of a wall shall not exceed 1/10th of the thickness of that part.

F-9.1.9 The maximum spacing of vertical or horizontal reinforcement shall not exceed smaller of,

a) 1/5th horizontal length L_w of wall;

b) 3 times thickness t_w of web of wall; and

c) 450 mm.

F-9.1.10 Special shear walls shall be founded on properly designed foundations and shall not be discontinued to rest on beams, columns or inclined members.

Table 33 Minimum Reinforcement in RC Shear Walls

(*Clause* F-9.1.6)

Sl No. (1)	Type of Wall (2)	Reinforcement Details (3)
i)	Squat walls	$(\rho_h)_{min} = 0.002\,5$
		$(\rho_v)_{min} = 0.002\,5 + 0.5\left(1 - \frac{h_w}{L_w}\right)(\rho_h - 0.002\,5$
		$(\rho_{v,net}) = (\rho_{v,web}) + \left(\frac{t_w}{L_w}\right).[0.02 - 2.5(\rho_{v,web})]$
		$(\rho_v)_{provided} < (\rho_h)_{provided}$
ii)	Intermediate walls	$(\rho_h)_{min} = 0.002\,5$ $(\rho_{v,be})_{min} = 0.008\,0$ $(\rho_{v,web})_{min} = 0.002\,5$
		$(\rho_{v,net})_{min} = 0.002\,5 + 0.001\,375\left(\frac{t_w}{L_w}\right)$
iii)	Slender walls	$(\rho_h)_{min} = 0.002\,5 + 0.5\left(\frac{h_w}{L_w} - 2\right)(\rho_h - 0.002\,5)$
		$(\rho_{v,be})_{min} = 0.008\,0$ $(\rho_{v,web})_{min} = 0.002\,5$
		$(\rho_{v,net})_{min} = 0.002\,5 + 0.001\,375\left(\frac{t_w}{L_w}\right)$

F-9.2 Design for Shear Force

F-9.2.1 Nominal shear stress demand τ_v on a wall shall be estimated as:

$$\tau_v = \frac{V_u}{t_w d_w},$$

where, V_u is factored shear force, t_w thickness of the web, and d_w effective depth of wall section (along the length of the wall), which may be taken as 0.8 L_w for rectangular sections.

F-9.2.2 Design shear strength τ_c of concrete shall be calculated as per Table 19.

F-9.2.3 When nominal shear stress demand τ_v on a wall is,

a) more than maximum design shear strength $\tau_{c,max}$ of concrete (given in Table 20), the wall section shall be re-designed;

b) less than maximum design shear strength $\tau_{c,max}$ of concrete and more than design shear strength τ_c of concrete, design horizontal shear reinforcement shall be provided of area A_h given by:

$$A_h = \frac{V_{us}}{0.87 f_y \left(\frac{d}{s_v}\right)_{Integral}} = \frac{V_u - \tau_c t_w d_w}{0.87 f_y \left(\frac{d}{s_v}\right)_{Integral}},$$

which shall not be less than the minimum area of horizontal steel as per **F-9.1.5**; and

c) less than design shear strength τ_c of concrete, horizontal shear reinforcement shall be the minimum area of horizontal steel as per **F-9.1.5**.

F-9.3 Design for Axial Force and Bending Moment

F-9.3.1 Design moment of resistance M_u of the wall section subjected to combined bending moment and compressive axial load shall be estimated in accordance with requirements of limit state design method given in this Subsection 5A, using the principles of mechanics involving equilibrium equations, strain compatibility conditions and constitutive laws.

The moment of resistance of slender rectangular structural wall section with uniformly distributed vertical reinforcement may be estimated using expressions given in **F-9.9**. Expressions given in **F-9.9** are not applicable for structural walls with boundary elements,

F-9.3.2 The cracked flexural strength of a wall section shall be greater than its uncracked flexural strength.

F-9.3.3 In structural walls that do not have boundary elements, at least a minimum of 4 bars of 12 mm diameter arranged in 2 layers, shall be concentrated as vertical reinforcement at the ends of the wall over a length not exceeding twice the thickness of RC wall.

F-9.4 Boundary Elements

Boundary elements are portions along the wall edges that are strengthened by longitudinal and transverse reinforcement even if they have the same thickness as that of the wall web. It is advantageous to provide boundary elements with dimension greater than thickness of the wall web.

F-9.4.1 Boundary elements shall be provided along the vertical boundaries of walls, when the extreme fibre compressive stress in the wall exceeds 0.2 f_{ck} due to factored gravity loads plus factored earthquake force. Boundary elements may be discontinued at elevations where extreme fibre compressive stress becomes less than 0.15 f_{ck}. Extreme fibre compressive stress shall be estimated using a linearly elastic model and gross section properties.

F-9.4.2 A boundary element shall have adequate axial load carrying capacity, assuming short column action, so as to enable it to carry axial compression arising from factored gravity load and lateral seismic shaking effects.

F-9.4.2.1 The load factor for gravity load shall be taken as 0.8, if gravity load gives higher axial compressive strength of the boundary element.

F-9.4.3 The vertical reinforcement in the boundary elements shall not be less than 0.8 percent and not greater than 6 percent; the practical upper limit would be 4 percent to avoid congestion.

F-9.4.4 Boundary elements, where required as per **F-9.4.1**, shall be provided with special confining reinforcement throughout their height, given by:

$$A_{sh} = 0.05\ s_v\ h\ \frac{f_{ck}}{f_y}$$

and have a spacing not more than,

a) 1/3 of minimum member dimension of the boundary element;

b) 6 times diameter of the smallest longitudinal reinforcement bars; and

c) 100 mm but may be relaxed to 150 mm if maximum distance between cross-ties/parallel legs of links or ties is limited to 200 mm, but need not be less than 100 mm.

F-9.4.5 Boundary elements need not be provided, if the entire wall section is provided with special confining reinforcement, as per **F-7**.

F-9.5 Coupling Beams

F-9.5.1 Coplanar special structural walls may be connected by means of coupling beams.

F-9.5.2 If earthquake induced shear stress τ_{ve} in coupling beam exceeds,

$$\tau_{ve} > 0.1\sqrt{f_{ck}}\left(\frac{L_s}{D}\right),$$

where L_s is clear span of coupling beam and D overall depth, the entire earthquake-induced shear, bending moment and axial compression shall be resisted by diagonal reinforcement alone. Further,

a) area of this diagonal reinforcement along each diagonal shall be estimated as:

$$A_{sd} = \frac{V_u}{1.74\ \ f_y \sin\alpha},$$

where V_u is factored shear force on the coupling beam and α the angle made by diagonal reinforcement with the horizontal; and

b) at least 4 bars of 8 mm diameter shall be provided along each diagonal. All longitudinal bars along each diagonal shall be enclosed by special confining transverse reinforcement as per **F-7** at a spacing not exceeding 100 mm.

F-9.5.3 The diagonal of a coupling beam shall be anchored in the adjacent walls with an anchorage length of 1.5 times the development length in tension (*see* Fig. 49).

F-9.6 Openings in Walls

F-9.6.1 Shear strength of a wall with openings should be checked at critical horizontal planes passing through openings.

F-9.6.2 Additional steel reinforcement shall be provided along all four edges of openings in walls. Further,

a) the area of these vertical and horizontal steel should be equal to that of the respective interrupted bars, provided half on either side of the wall in each direction.

b) these vertical bars should extend for full height of the storey in which this opening is present.

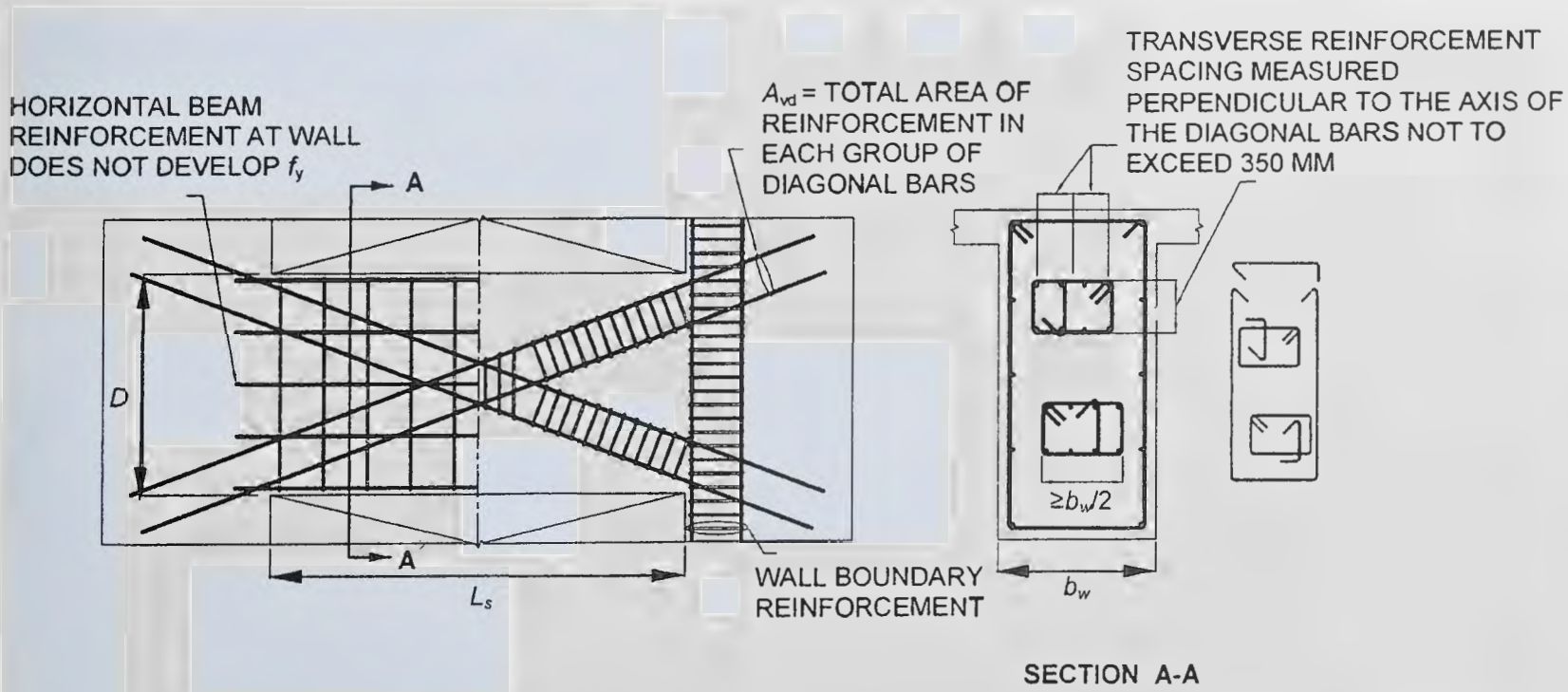

FIG. 49 COUPLING BEAMS WITH DIAGONAL REINFORCEMENT

c) the horizontal bars should be provided with development length in tension beyond the edge of the opening.

F-9.7 Construction Joints

Vertical reinforcement across a horizontal construction joint shall have area, A_{st} is given by:

$$\frac{A_{st}}{A_g} \geq \frac{0.92}{f_y}\left(\tau_v - \frac{P_u}{A_g}\right)$$

where τ_v is factored shear stress at the joint, P_u factored axial force (positive for compression), and A_g gross cross-sectional area of joint.

F-9.8 Development, Splice and Anchorage Requirement

F-9.8.1 Horizontal reinforcement shall be anchored near the edges of wall or in confined core of boundary elements.

F-9.8.2 In slender walls ($H/L_w > 2$), splicing of vertical flexural reinforcement should be avoided, as far as possible, in regions where flexural yielding may take place, which extends for a distance larger of,

a) L_w above the base of the wall; and
b) 1/6th of the wall height;

but not larger than $2L_w$.

F-9.8.3 *Splices*

F-9.8.3.1 *Lap splices*

When adopted, closed links shall be provided over the entire length over which the longitudinal bars are spliced. Further,

a) the spacing of these links shall not exceed 150 mm.
b) the lap length shall not be less than the development length of the largest longitudinal reinforcement bar in tension.
c) lap splices shall be provided only in the central half of clear wall height, and not,
   1) within a joint; or
   2) within a distance of $2d$ from a location where yielding of reinforcement is likely to take place.
d) not more than 50 percent of area of steel bars shall be spliced at any one section.

F-9.8.3.2 Mechanical couplers {conforming to accepted standard [6-5A(38)]} shall be used. Further, only those mechanical splices conforming to the above standard and capable of developing the specified tensile strength of spliced bar shall be permitted within a distance equal to two times the depth of the member from the beam-column joint or in any location where yielding of reinforcement is likely to take place

F-9.8.3.3 *Welded splices*

Welded splices shall be avoided as far as possible. In no case shall they be used for a distance equal to two times the depth of the member from the member face or in any location where yielding of reinforcement is likely to take place. At any location, not more than 50 percent of area of steel bars shall be spliced at any one section.

Welding of links, ties, inserts or other similar elements to vertical reinforcement bars required as per design is not permitted, in any seismic zone.

F-9.8.4 In buildings located in Seismic Zones II and III, closed loop transverse links shall be provided around lapped spliced bars larger than 16 mm in diameter. The minimum diameter of such links shall be 1/4th of diameter of spliced bar but not less than 8 mm at spacing not exceeding 150 mm centres.

F-9.9 Moment of Resistance of Rectangular Shear Wall Section

The moment of resistance M_u of a slender rectangular structural wall section with uniformly distributed vertical reinforcement may be estimated as:

a) For $(x_u/L_w) < (x_u^*/L_w)$

$$\frac{M_u}{f_{ck} t_w L_w^2} = \varphi\left[\left(1+\frac{\lambda}{\varphi}\right)\left(\frac{1}{2} - 0.416\frac{x_u}{L_w}\right) - \left(\frac{x_u}{L_w}\right)^2\left(0.168 + \frac{\beta^2}{3}\right)\right]$$

where

$$\frac{x_u}{L_w} = \left(\frac{\varphi+\lambda}{2\varphi+0.36}\right);$$

$$\frac{x_u^*}{L_w} = \frac{0.0035}{0.0035 + (0.002 + 0.87\, f_y/E_s)}$$

$$\varphi = \left(\frac{0.87 f_y \rho}{f_{ck}}\right);$$

$$\lambda = \frac{P_u}{f_{ck} t_w L_w}$$

ρ = vertical reinforcement ratio = $\left(\frac{A_{st}}{t_w L_w}\right)$,

A_{st} = area of uniformly distributed vertical reinforcement,

$$\beta = \frac{(0.002 + 0.87 f_y / E_s)}{0.0035},$$

E_s = elastic modulus of steel, and

P_u = factored compressive axial force on wall.

b) For $(x_u^*/L_w) < (x_u/L_w) < 1.0$

$$\frac{M_u}{f_{ck} t_w L_w^2} = \alpha_1 \left(\frac{x_u}{L_w}\right) - \alpha_2 \left(\frac{x_u}{L_w}\right)^2 - \alpha_3 - \frac{\lambda}{2}$$

where

$$\alpha_1 = \left[0.36 + \varphi\left(1 - \frac{\beta}{2} - \frac{1}{2\beta}\right)\right]$$

$$\alpha_2 = \left[0.15 + \frac{\varphi}{2}\left(1 - \beta + \frac{\beta^2}{3} - \frac{1}{3\beta}\right)\right] \text{ and}$$

$$\alpha_3 = \frac{\varphi}{6\beta}\left(\frac{1}{x_u/L_w} - 3\right).$$

x_u/L_w to be used in this expression shall be obtained by solving the equation:

$$\alpha_1 \left(\frac{x_u}{L_w}\right)^2 + \alpha_4 \left(\frac{x_u}{L_w}\right) - \alpha_5 = 0$$

where

$$\alpha_4 = \left(\frac{\varphi}{\beta} - \lambda\right), \text{ and}$$

$$\alpha_5 = \left(\frac{\varphi}{2\beta}\right).$$

F-10 GRAVITY COLUMNS IN BUILDINGS

Gravity columns in buildings shall be detailed according to **F-10.1** and **F-10.2** for bending moments induced when subjected to 'R' times the design lateral displacement under the factored equivalent static design seismic loads given by **5** of Part 6 'Structural Design, Section 1 Loads, Forces and Effects' of the Code.

F-10.1 The provisions in **F-10.1.1** and **F-10.1.2** shall be satisfied, when induced bending moments and horizontal shear forces under the said lateral displacement combined with factored gravity bending moment and shear force do not exceed the design moment of resistance and design lateral shear capacity of the column.

F-10.1.1 Gravity columns shall satisfy **F-6.3.2**, **F-6.4.1** and **F-6.4.2.** But, spacing of links along the full column height shall not exceed 6 times diameter of smallest longitudinal bar or 150 mm.

F-10.1.2 Gravity columns with factored gravity axial stress exceeding $0.4f_{ck}$ shall satisfy **F-10.1.1** and shall have transverse reinforcement at least one half of special confining reinforcement required by **F-7**.

F-10.2 When induced bending moments and shear forces under said lateral displacement combined with factored gravity bending moment and shear force exceed design moment and shear strength of the frame, **F-10.2.1** and **F-10.2.2** shall be satisfied.

F-10.2.1 Mechanical and welded splices shall satisfy **F-6.3.2.2** and **F-6.3.2.3.**

F-10.2.2 Gravity columns shall satisfy **F-6.4** and **F-7**.

ANNEX G

(*Clauses* 34.3.2 and 42.1)

CALCULATION OF CRACK WIDTH

Provided that the strain in the tension reinforcement is limited to 0.8 F_y/E_s, the design surface crack width, which should not exceed the appropriate value given in **34.3.2** may be calculated from the following equation:

Design surface crack width:

$$W_{cr} = \frac{3a_{cr}\varepsilon_m}{1+\dfrac{2(2a_{cr}-C_{min})}{h-x}}$$

where

a_{cr} = distance from the point considered to the surface of the nearest longitudinal bar.

C_{min} = minimum cover to the longitudinal bar,

ε_m = average steel strain at the level considered,

h = overall depth of the member, and

x = depth of the neutral axis.

The average steel strain ε_m may be calculated on the basis of the following assumption:

The concrete and the steel are both considered to be fully elastic in tension and in compression. The elastic modulus of the steel may be taken as 200 kN/mm^2 and the elastic modulus of the concrete is as derived from the equation given in **5.2.3.1** both in compression and in tension.

Alternatively, as an approximation, it will normally be satisfactory to calculate the steel stress on the basis of a cracked section and then reduce this by an amount equal to the tensile force generated by the triangular distributions, having a value of zero at the neutral axis and a value at the centroid of the tension steel of 1 N/mm^2 instantaneously, reducing to 0.55 N/mm^2 in the long-term, acting over the tension zone divided by the steel area.

These assumptions are illustrated in Fig. 50,

For a rectangular tension zone, this gives:

$$\varepsilon_m = \varepsilon_1 - \frac{b(h-x)\ (a-x)}{3E_sA_s(d-x)}$$

where

A_s = area of tension reinforcement,

b = width of the section at the centroid of the tension steel,

ε_1 = strain at the level considered, calculated ignoring the stiffening of the concrete in the tension zone,

a = distance from the compression face to the point at which the crack width is being calculated, and

d = effective depth.

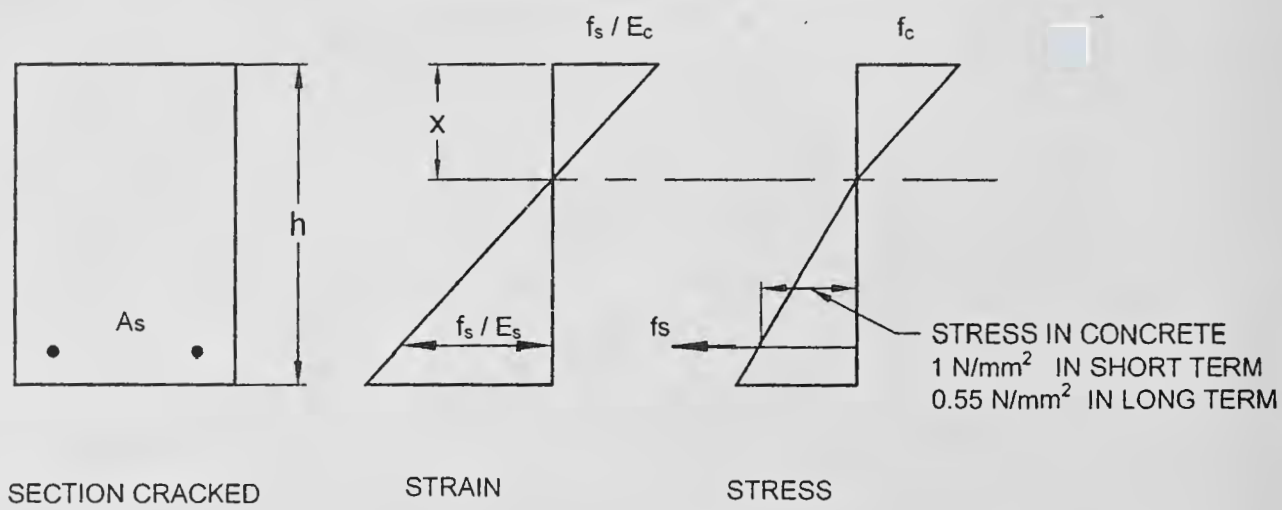

where

h = overall depth of the section,

x = depth from the compression face to the neutral axis,

f_c = maximum compressive stress in the concrete,

f_s = tensile stress in the reinforcement, and

E_s = modulus of elasticify of the reinforcement.

FIG. 50

ANNEX H

(*Clause* 37.1)

MOMENTS OF RESISTANCE FOR RECTANGULAR AND T-SECTIONS

H-0 The moments of resistance of rectangular and T-sections based on the assumption of **37.1** are given in this annex.

H-1 RECTANGULAR SECTIONS

H-1.1 Sections Without Compression Reinforcement

The moment of resistance of rectangular sections without compression reinforcement should be obtained as follows:

a) Determine the depth of neutral axis from the following equation:

$$\frac{x_u}{d} = \frac{0.87 f_y A_{st}}{0.36 f_{ck} b.d}$$

b) If the value of x_u/d is less than the limiting value (see Note below **37.1**), calculate the moment of resistance by the following expression:

$$M_u = 0.87 f_y A_{st} d \left[1 - \frac{A_{st} f_y}{b d f_{ck}}\right]$$

c) If the value of x_u/d is equal to the limiting value, the moment of resistance of the section is given by the following expression:

$$M_{u,\,lim} = 0.36 \frac{x_{u,max}}{d}\left[1 - 0.42 \frac{x_{u,max}}{d}\right] b d^2 f_{ck}$$

d) If x_u/d is greater than the limiting value, the section should be redesigned.

In the above equations,

x_u = depth of neutral axis,

d = effective depth,

f_y = characteristic strength of reinforcement,

A_{st} = area of tension reinforcement

f_{ck} = characteristic compressive strength of concrete,

b = width of the compression face,

$M_{u,lim}$ = limiting moment of resistance of a section without compression reinforcement, and

$x_{u,max}$ = limiting value of x_u from **37.1**.

H-1.2 Section with Compression Reinforcement

Where the ultimate moment of resistance of section exceeds the limiting value, $M_{u,lim}$ compression reinforcement may be obtained from the following equation:

$$M_u - M_{u,\,lim} = f_{sc} A_{sc} (d - d')$$

where

M_u, $M_{u,lim}$, d are same as in **H-1.1**

f_{sc} = design stress in compression reinforcement corresponding to a strain of

$$0.003\ 5 \frac{(x_{u,max} - d')}{x_{u,max}}$$

$x_{u,max}$ = the limiting value of x_u from **37.1**.

A_{sc} = area of compression reinforcement, and

d' = depth of compression reinforcement from compression face.

The total area of tension reinforcement shall be obtained from the following equation:

$$A_{st} = A_{st1} + A_{st2}$$

where

A_{st} = area of the total tensile reinforcement,

A_{st1} = area of the tensile reinforcement for a singly reinforced section for $M_{u,lim}$, and

A_{st2} = $A_{sc} f_{sc} / 0.87 f_y$

H-2 FLANGED SECTION

H-2.1 For $x_u < D_f$, the moment of resistance may be calculated from the equation given in **H-1.1**.

H-2.2 The limiting value of the moment of resistance of the section may be obtained by the following equation when the ratio D_f/d does not exceed 0.2:

$$M_u = 0.36 \frac{x_{u,max}}{D}\left[1 - 0.42 \frac{x_{u,max}}{D}\right] f_{ck} b_w d^2 + 0.45 f_{ck} (b_f - b_w) D_f \left[d - \frac{D_f}{2}\right]$$

where

M_u, $x_{u,max}$, d and f_{ck} are same as in **H-1.1**,

b_f = breadth of the compression face/flange,

b_w = breadth of the web,

D_f = thickness of the flange.

H-2.2.1 When the ratio D_f/d exceeds 0.2, the moment of resistance of the section may be calculated by the following equation:

$$M_u = 0.36\frac{x_{u,max}}{D}\left[1-0.42\frac{x_{u,max}}{D}\right]f_{ck}b_w d^2 + 0.45 f_{ck}\left(b_f - b_w\right)y_f\left[d-\frac{y_f}{2}\right]$$

where $y_f = (0.15\ x_u + 0.65\ D_f)$, but not greater than D_f and the other symbols are same as in **H-1.1** and **H-2.2**.

H-2.3 For $x_{u,max} > x_u > D_f$, the moment of resistance may be calculated by the equations given in **H-2.2** when D_f/x_u does not exceed 0.43 and **H-2.2.1** when D_f/x_u exceeds 0.43; in both cases substituting $x_{u,max}$ by x_u.

LIST OF STANDARDS

The following list records those standards which are acceptable as 'good practice' and 'accepted standards' in the fulfillment of the requirements of the Code. The latest version of a standard shall be adopted at the time of enforcement of the Code. The standards listed may be used by the Authority for conformance with the requirements of the referred clauses in the Code.

In the following list, the number appearing in the first column within parentheses indicates the number of the reference in this Subsection.

	IS No.	*Title*
(1)	3370	Concrete structures for the storage of liquids — Code of practice
	(Part 1) : 2009	General requirements (*first revision*)
	(Part 2) : 2009	Reinforced concrete structures (*first revision*)
	2210 : 1988	Criteria for design of reinforced concrete shell structures and folded plates (*first revision*)
	3201 : 1988	Criteria for design and construction of precast-trusses and purlins (*first revision*)
	4090 : 1967	Criteria for design of reinforced concrete arches
	4991 : 1968	Criteria for blast resistant design of structures for explosions above ground
	4995	Criteria for design of reinforced concrete bins for storage of granular and powdery materials
	(Part 1) : 1974	General requirements and bin loads
	(Part 2) : 1974	Design criteria
	4998 : 2015	Criteria for design of reinforced concrete chimneys (*third revision*)
	6922 : 1973	Criteria for safety and design of structures subject to underground blasts
(2)	4845 : 1968	Definitions and terminology relating to hydraulic cement
	6461	Glossary of terms relating to cement:
	(Part 1) : 1972	Concrete aggregates
	(Part 2) : 1972	Materials
	(Part 3) : 1972	Concrete reinforcement
	(Part 4) : 1972	Types of concrete
	(Part 5) : 1972	Formwork for concrete
	(Part 6) : 1972	Equipment, tool and plant
	(Part 7) : 1973	Mixing, laying, compaction, curing and other construction aspect
	(Part 8) : 1973	Properties of concrete
	(Part 9) : 1973	Structural aspects
	(Part 10) : 1973	Tests and testing apparatus
	(Part 11) : 1973	Prestressed concrete
	(Part 12) : 1973	Miscellaneous
(3)	269 : 2015	Ordinary Portland cement — Specification (*sixth revision*)
	8041 : 1990	Specification for rapid hardening Portland cement (*second revision*)
	455 : 2015	Specification for Portland slag cement (*fifth revision*)
	1489	Specification for Portland pozzolana cement:
	(Part 1) : 2015	Fly ash based (*fourth revision*)
	(Part 2) : 2015	Calcined clay based (*fourth revision*)
	8043 : 1991	Specification for hydrophobic Portland cement (*second revision*)
	12600 : 1989	Specification for low heat Portland cement
	12330 : 1988	Specification for sulphate resisting Portland cement
(4)	12600 : 1989	Specification for low heat Portland cement

	IS No.	Title
(5)	6452 : 1989	Specification for high alumina cement for structural use (*first revision*)
(6)	6909 : 1990	Specification for supersulphated cement (*first revision*)
(7)	3812 (Part 1) : 2013	Pulverized fuel ash — Specification: Part 1 For use as pozzolana in cement, cement mortar and concrete (*third revision*)
(8)	15388 : 2013	Specification for silica fume
(9)	16353 : 2015	Specification for Metakaolin
(10)	12089 : 1987	Specification for granulated slag for manufacture of Portland slag cement
(11)	9103 : 1999	Specification for admixtures for concrete (*first revision*)
(12)	383 : 2016	Specification for coarse and fine aggregates for concrete (*third revision*)
(13)	3025	Methods of sampling and test (physical and chemical) for water and waste water:
	(Part 22) : 1986	Acidity (*first revision*)
	(Part 23) : 1986	Alkalinity (*first revision*)
	(Part 18) : 1984	Volatile and fixed residue (total filterable and non-filterable) (*first revision*)
	(Part 24) : 1986	Sulphates (*first revision*)
	(Part 32) : 1988	Chloride (*first revision*)
	(Part 17) : 1984	Non-filterable residue (total suspended solids) (*first revision*)
(14)	516 : 1959	Method of test for strength of concrete
(15)	4031 (Part 5) : 1988	Methods of physical tests for hydraulic cement: Part 5 Determination of initial and final setting times (*first revision*)
(16)	432 (Part 1) : 1982	Specification for mild steel and medium tensile steel bars and hard-drawn steel wire for concrete reinforcement: Part 1 Mild steel and medium tensile steel bars (*third revision*)
	1786 : 2008	High strength deformed steel bars and wires for concrete reinforcement — Specification (*fourth revision*)
	1566 : 1982	Specification for hard-drawn steel wire fabric for concrete reinforcement (*second revision*)
	2062 : 2011	Hot rolled medium and high tensile structural steel — Specification (*seventh revision*)
(17)	4082 : 1996	Recommendations on stacking and storage of construction materials and components at site (*second revision*)
(18)	516 : 1959	Method of test for strength of concrete
	5816 : 1999	Method of test for splitting tensile strength of concrete (*first revision*)
(19)	1343 : 2012	Prestressed concrete — Code of practice (*second revision*)
(20)	1199 (Part 6)	Methods of sampling and analysis of concrete : Part 6 Tests on fresh self compacting concrete (*under preparation*)
(21)	455 : 2015	Specification for Portland slag cement (*fifth revision*)
(22)	1489 (Part 1) : 2015	Specification for Portland pozzolana cement : Part 1 Fly ash based (*fourth revision*)
(23)	4925 : 2004	Specification for concrete batching and mixing plant (*first revision*)
(24)	4926 : 2003	Code of practice for ready-mixed concrete (*second revision*)
(25)	2386 (Part 3) : 1963	Methods of test for aggregates for concrete: Part 3 Specific gravity, density, voids, absorption and bulking
(26)	1791 : 1985	Specification for batch type concrete mixers (*second revision*)
	12119 : 1987	General requirements for pan mixers for concrete
(27)	4634 : 1991	Methods for testing performance of batch-type concrete mixers (*first revision*)
(28)	14687 : 1999	Guidelines for falsework for concrete structure
(29)	2502 : 1963	Code of practice for bending and fixing of bars for concrete reinforcement
(30)	2751 : 1979	Recommended practice for welding of mild steel plain and deformed bars for reinforced construction (*first revision*)
	9417 : 1989	Recommendations for welding cold worked bars for reinforced concrete construction (*first revision*)
(31)	2505 : 1992	Concrete vibrators – Immersion type – General requirements
	2506 : 1985	General requirements for screed board concrete vibrators (*first revision*)
	2514 : 1963	Specification for concrete vibrating tables

IS No.	Title
(32) 7861	Code of practice for extreme weather concreting
(Part 1) : 1975	Recommended practice for hot weather concreting
(Part 2) : 1981	Recommended practice for cold weather concreting
(33) 9013 : 1978	Method of making, curing and determining compressive strength of accelerated cured concrete test specimens
(34) 13311	Methods of non-destructive testing of concrete
(Part 1) : 1992	Ultrasonic pulse velocity
(Part 2) : 1992	Rebound hammer
(35) 10262 : 2009	Guidelines for concrete mix design proportioning
(36) 1786 : 2008	High strength deformed steel bars and wires for concrete reinforcement — Specification (*fourth revision*)
(37) 13620 : 1993	Fusion bonded epoxy coated reinforcing bars — Specification
(38) 16172 : 2014	Reinforcement couplers for mechanical splices of bars for concrete reinforcement — Specification
(39) 3414 : 1968	Code of practice for design and installation of joints in buildings
(40) 3951 (Part 1) : 2009	Hollow clay tiles for floors and roofs —Specification: Part 1 Filler type (*second revision*)
(41) 6061 (Part 1) : 1971	Code of practice for construction of floor and roof with joists and filler blocks: Part 1 With hollow concrete filler blocks
6061 (Part 2) : 1981	Code of practice for construction of floor and roof with joists and filler blocks: Part 2 With hollow clay filler blocks (*first revision*)
(42) 432 (Part 1) : 1982	Specification for mild steel and medium tensile steel bars and hard-drawn steel wire for concrete reinforcement: Part 1 Mild steel and medium tensile steel bars (*third revision*)
(43) 1566 : 1982	Specification for hard-drawn steel wire fabric for concrete reinforcement (*second revision*)

NATIONAL BUILDING CODE OF INDIA

PART 6 STRUCTURAL DESIGN

Section 5 Concrete: 5B Prestressed Concrete

BUREAU OF INDIAN STANDARDS

CONTENTS

FOREWORD ... 3

SECTION 5B (A) GENERAL

1 SCOPE ... 5
2 TERMINOLOGY ... 5
3 SYMBOLS ... 6

SECTION 5B (B) MATERIALS, WORKMANSHIP, INSPECTION AND TESTING

4 MATERIALS ... 6
5 CONCRETE ... 8
6 WORKABILITY OF CONCRETE ... 11
7 DURABILITY OF CONCRETE ... 11
8 CONCRETE MIX PROPORTIONING ... 15
9 PRODUCTION OF CONCRETE ... 15
10 FORMWORK ... 17
11 ASSEMBLY OF PRESTRESSING AND REINFORCING STEEL ... 17
12 PRESTRESSING ... 19
13 TRANSPORTING, PLACING, COMPACTING AND CURING ... 25
14 CONCRETING UNDER SPECIAL CONDITIONS ... 25
15 SAMPLING AND STRENGTH TEST OF DESIGN CONCRETE MIX ... 25
16 ACCEPTANCE CRITERIA ... 25
17 INSPECTION AND TESTING OF STRUCTURES ... 25

SECTION 5B (C) GENERAL DESIGN REQUIREMENTS

18 GENERAL DESIGN REQUIREMENTS ... 26

SECTION 5B (D) STRUCTURAL DESIGN: LIMIT STATE METHOD

19 SAFETY AND SERVICEABILITY REQUIREMENTS ... 30
20 CHARACTERISTIC AND DESIGN VALUES AND PARTIAL SAFETY FACTORS ... 31
21 ANALYSIS ... 32
22 LIMIT STATE OF COLLAPSE ... 32
23 LIMIT STATE OF SERVICEABILITY ... 37
ANNEX A SHEATHING DUCTS FOR PRESTRESSING ... 39
ANNEX B TESTING OF SYSTEMS WITH MECHANICAL ANCHORAGES ... 45
ANNEX C MOMENTS OF RESISTANCE FOR RECTANGULAR AND T-SECTIONS ... 49
LIST OF STANDARDS ... 50

FOREWORD

This Code (Part 6/Subsection 5B) covers the structural design aspects of prestressed concrete.

The Section 5 of Part 6 of the Code covers plain and reinforced concrete and also the prestressed concrete. The Section has been subdivided into the following subsections:

5A Plain and Reinforced Concrete

5B Prestressed Concrete

Provisions related to prestressed concrete are covered in the following format:

Section 5B (A)	General
Section 5B (B)	Materials, workmanship, inspection and testing
Section 5B (C)	General design requirements
Section 5B (D)	Structural design: Limit state method

In some clauses, the Code recommends reference to specialist literature, since the current knowledge on some aspects of design had not yet crystallized. This had also been done in order to avoid burdening the Code with a lot of details which may not be required for the design of great majority of structures.

While deciding on the symbols used in the Code, the recommendations on ISO 3898 : 2013 'Bases for design of structures — Names and symbols of physical quantities and generic quantities' had been taken into consideration. However, considering the convenience of the users of the Code, the familiar symbols of the old version were retained to the extent possible.

IS 456 was revised in the year 2000 as IS 456 : 2000 'Code of practice for plain and reinforced concrete (*fourth revision*)', to which 4 amendments were subsequently issued. In IS 456, major changes were incorporated in provisions relating to materials, workmanship, inspection and testing, and general design requirements. In view of the attempt at unification between provisions of reinforced concrete and prestressed concrete codes, these changes are relevant to prestressed concrete code also. Considering this aspect as also the need for a complete review of the provision of the Code in light of the latest international developments and the improved practices being followed now, a full scale revision of IS 1343 was done, bringing out IS 1343 : 2012 'Code of practice for prestress concrete (*second revision*)'.

In this second revision of this Subsection, the provisions have been brought in line with IS 1343 : 2012, along with the following further modifications incorporated with a view to keeping abreast with the rapid development in the field of prestressed concrete technology and also to bring in further clarifications and modifications in the light of experience gained, as follows:

a) It has been clarified that the Section/Code does not cover the specific requirements for bridges.

b) Clause on terminology has been reviewed and some new definitions such as anchorage device, cable, relaxation and sheathing have been added apart from modifications in other definitions such as on tendon.

c) Section on materials, workmanship, inspection and testing has been completely modified in line with IS 456 as applicable to prestressing and other changes have been incorporated as follows:

   1) All the references to materials for making prestressed concrete have been updated.

   2) Precautions to be made while using Portland slag cement and Portland pozzolana cement or mineral admixture to account for modified de-shuttering time, curing period and the time of prestressing have been included.

   3) Provisions relating to maximum water cement ratio, minimum grade of concrete and minimum cement concrete have been clarified *vis-à-vis* concrete exposed to sulphate attack.

   4) Uncoated stress relieved low relaxation seven ply strand has also been converted as prestressing steel.

5) Provisions on modulus of elasticity have been modified.
6) Grades of concrete have been specified up to M 80 from the existing M 30 to M 60.
7) Provisions on creep and shrinkage of concrete have been revised.
8) Durability requirements have been covered exhaustively in line with IS 456 as applicable to prestressed concrete; the maximum cement content has been specified as 450 kg/m^3.
9) Assumed standard deviation has been specified as 5.0 N/mm^2 for concrete mix proportioning.
10) Provisions on assembly of prestressing and reinforcing steel and on prestressing have been thoroughly revised in line with the present improved practices, and details on protection of prestressing steel, sheathing and anchorages have been incorporated.
11) Sampling and strength test of designed concrete mix has been modified in line with IS 456.

d) The Sections on General Design Requirement and Structural Design (Limit State) have been modified as follows:
   1) Provisions are in line with IS 456 as applicable.
   2) Design provisions are updated in line with the latest practices.

e) Provisions related to bearing stress in the end zone in post-tensioned members have been updated.
f) Provisions related to ultimate shear resistance of a section uncracked in flexure have been updated.
g) Provisions related to ultimate shear resistance of a section cracked in flexure have been updated.
h) Test on wall thickness of the duct of corrugated HDPE sheathing duct has been updated.

In this Code, it has been assumed that the design of prestressed concrete structures is entrusted to a qualified engineer, and that the execution of the work is carried out under the direction of an experienced supervisor.

All standards, whether given herein above or cross-referred to in the main text of this Subsection, are subject to revision. The parties to agreement based on this Subsection are encouraged to investigate the possibility of applying the most recent editions of the standards.

For the purpose of deciding whether a particular requirement of this Subsection is complied with, the final value, observed or calculated, expressing the result of a test or analysis, shall be rounded off in accordance with IS 2 : 1960 'Rules for rounding off numerical values (*revised*)'. The number of significant places retained in the rounded off value should be the same as that of the specified value in this Subsection.

NATIONAL BUILDING CODE OF INDIA

PART 6 STRUCTURAL DESIGN

Section 5 Concrete: 5B Prestressed Concrete

SECTION 5B (A) GENERAL

1 SCOPE

1.1 This Code (Part 6/Subsection 5B) deals with the general structural use of prestressed concrete. It covers both work carried out on site and the manufacture of precast prestressed concrete units.

1.2 Special requirements of structures such as pipes and poles covered in respective standards have not been covered in this Subsection; these standards shall be used in conjunction with this Subsection. This Subsection does not cover specific provisions regarding bridges.

2 TERMINOLOGY

For the purpose of this Subsection, the following definitions shall apply, and for other terms those given in the accepted standard [6-5B(1)] shall apply.

2.1 Anchorage Device — In post-tensioning, the hardware used for transferring the post-tensioning force from the tendon to the concrete in anchorage zone.

2.2 Bonded Member — A prestressed concrete member in which tendons are bonded to the concrete either directly or through grouting.

2.3 Bonded Post-Tensioning — Post-tensioned construction in which the annular spaces around the tendons are grouted after stressing, thereby bonding the tendon to the concrete section.

2.4 Cable — A group of wires or bars or strands or rods.

2.5 Characteristic Load — Load which has 95 percent probability of not being exceeded during the life of the structure (*see* **20.2**).

2.6 Characteristic Strength — Strength of material below which not more than 5 percent of the test results are expected to fall (*see* **20.1**).

2.7 Column or Strut — A compression member, the effective length of which exceeds three times the least lateral dimension.

2.8 Creep — Time dependent deformation due to sustained load.

2.9 Creep Coefficient — The ratio of creep strain to elastic strain in concrete.

2.10 Final Prestress — The stress which exists after substantially all losses have occurred.

2.11 Final Tension — The tension in the prestressing tendon corresponding to the state of the final prestress.

2.12 Initial Prestress — The prestressing force in the tendon at transfer.

2.13 Initial Tension — The maximum stress induced in the prestressing tendon at the time of the stressing operation.

2.14 Post-Tensioning — A method of prestressing concrete in which prestressing steel is tensioned against the hardened concrete.

2.15 Prestressed Concrete — Concrete in which permanent internal stresses are deliberately introduced, usually by tensioned steel, to counteract to the desired degree the stresses caused in the member during service.

2.16 Pre-Tensioning — A method of prestressing concrete in which the tendons are tensioned before concreting.

2.17 Relaxation — Time dependent decrease in steel stress at constant strain.

2.18 Sheathing — A material encasing a prestressing tendon to prevent bonding the tendon with the surrounding concrete during placement of concrete and to provide protection against corrosion.

2.19 Short Column — A column, the effective length of which does not exceed 12 times the least lateral dimension.

2.20 Slender Column — A column, the effective length of which exceeds 12 times the least lateral dimension.

2.21 Shrinkage Loss — The loss of stress in the prestressing steel resulting from the shrinkage of the concrete.

2.22 Stress at Transfer — The stress in both the prestressing tendon and the concrete when the prestressing tendon is released from the prestressing mechanism.

2.23 Tendon — A steel element, such as a wire, cable, bar, rod or strand, or a bundle of such elements used to impart prestress to concrete when the element is tensioned.

2.24 Transfer — The act of transferring the stress in prestressing tendons from the jacks or pre-tensioning bed to the concrete member.

2.25 Transmission Length — The distance required at the end of a pre-tensioned tendon for developing the maximum tendon stress by bond.

3 SYMBOLS

For the purpose of this Subsection, the following letter symbols shall have the meaning indicated against each; where other symbols are used, they are explained at the appropriate place:

A = Area

B = Breadth of beam

b_w = Breadth of web or rib

D = Overall depth of beam

DL = Dead load

d = Effective depth of beam

d_t = Effective depth of beam in shear

E_c = Short term modulus of elasticity of concrete

EL = Earthquake load

E_s = Modulus of elasticity of steel

e = Eccentricity

F = Characteristic load

F_{bst} = Bursting tensile force

F_d = Design load

f = Characteristic strength of material

f_{ci} = Cube strength of concrete at transfer

f_{ck} = Characteristic compressive strength of concrete

f_{cp} = Compressive stress at centroidal axis due to prestress or average intensity of effective prestress in concrete

f_{cr} = Modulus of rupture of concrete (flexural tensile strength)

f_d = Design strength

f_p = Characteristic strength of prestressing steel

f_{pe} = Maximum prestress after losses

f_{pi} = Maximum initial prestress

f_{pu} = Ultimate tensile stress in the tendons

f_t = Maximum principal tensile stress

f_y = Characteristic strength of reinforcement

IL = Imposed load

M = Bending moment

m = Modular ratio

P = Load due to prestressing effect

s = Spacing of stirrups

T = Torsional moment

V = Shear force

V_c = Ultimate shear resistance of concrete

V_{co} = Ultimate shear resistance of a section uncracked in flexure

V_{cr} = Ultimate shear resistance of a section cracked in flexure

WL = Wind load

x_u = Depth of neutral axis

γ_f = Partial safety factor for load

γ_m = Partial safety factor for material

δ_m = Percentage reduction in moment

τ_c = Shear stress in concrete

ϕ = Diameter of tendon or bar

SECTION 5B (B) MATERIALS, WORKMANSHIP, INSPECTION AND TESTING

4 MATERIALS

4.1 Cement

The cement used shall be any of the following conforming to accepted standards [6-5B(2)] and the type selected should be appropriate for the intended use:

a) Ordinary Portland cement,
b) Rapid-hardening Portland cement,
c) Portland slag cement,
d) Portland pozzolana cement (fly ash based),
e) Portland pozzolana cement (calcined clay based),
f) Hydrophobic cement,
g) Low heat Portland cement, and
h) Sulphate resisting Portland cement.

Other combinations of Portland cement with mineral admixtures (*see* **4.2**) of quality conforming to relevant Indian Standards laid down may also be used in the manufacture of concrete provided that there are satisfactory data on their suitability, such as performance test on concrete containing them. Rate of slow gain of strength with Portland slag cement and Portland pozzolana cement should be taken into account while deciding the de-shuttering time, curing period and the time of prestressing (*see also* **10** and **13**).

4.1.1 Low heat Portland cement conforming to the accepted standard [6-5B(3)] shall be used with adequate precautions with regard to removal of formwork, etc.

4.1.2 High alumina cement conforming to the accepted standard [6-5B(4)] or supersulphated cement conforming to the accepted standard [6-5B(5)] may be used only under special circumstances with the prior approval of the engineer-in-charge. Specialist literature may be consulted for guidance regarding the use of these types of cements.

4.1.3 The attention of the engineer-in-charge and users of cement is drawn to the fact that quality of various cements mentioned in **4.1** is to be determined on the basis of its conformity to the performance characteristics given in the respective Indian Standard specification for that cement. Any trade-mark or any trade name indicating any special features not covered in the standard or any qualification or other special performance characteristics sometimes claimed/ indicated on the bags or containers or in advertisement alongside the 'Statutory Quality Marking' or otherwise have no relation whatsoever with the characteristic guaranteed by the 'Statutory Quality Marking' as relevant to that cement. Consumers are, therefore, advised to go by the characteristics as given in the corresponding Indian Standard specification or seek specialist advice to avoid any problem in concrete making and construction.

4.2 Mineral Admixtures

Mineral admixtures used shall conform to **4.2** of Part 6 'Structural Design, Section 5 Concrete, Subsection 5A Plain and Reinforced Concrete' of the Code. When mineral admixtures are used, rate of slow gain in strength should be taken into account while deciding the de-shuttering time, curing period and the time of prestressing (*see also* **10** and **13**).

4.3 Aggregates

All aggregate shall comply with the requirements of accepted standard [6-5B(6)].

4.3.1 Heavy weight aggregates may also be used provided the engineer-in-charge is satisfied with the data on the properties of concrete made with them.

NOTE — Some of the provisions of the standard would require modification when these aggregates are used. Specialist literature may be consulted for guidance.

4.3.2 *Size of Aggregates*

The nominal maximum size of coarse aggregate should be as large as possible within the limits specified but in no case greater than one-fourth of the minimum thickness of the member, provided that the concrete can be placed without difficulty so as to surround all prestressing tendons and reinforcements thoroughly and fill the corners of the form. For most work, 20 mm aggregate is suitable.

The nominal maximum size of the aggregate shall be 5 mm less than the spacing between the tendons, sheathings, ducts or untensioned steel, where provided.

4.4 Water

The requirements of water used for mixing and curing shall conform to the requirements given in **4.4** of Part 6 'Structural Design, Section 5 Concrete, Subsection 5A Plain and Reinforced Concrete' of the Code. However, use of sea water is prohibited.

4.5 Chemical Admixtures

Chemical admixtures shall be used according to **4.5** of Part 6 'Structural Design, Section 5 Concrete, Subsection 5A Plain and Reinforced Concrete' of the Code.

4.6 Prestressed and Untensioned Steel

4.6.1 *Prestressing Steel*

4.6.1.1 The prestressing steel shall be any one of the following conforming to accepted standards [6-5B(7)]:

a) Plain hard-drawn steel wire (cold-drawn stress relieved wire),
b) Indented wire,
c) High tensile steel bar,
d) Uncoated stress relieved strand, and
e) Uncoated stress relieved low relaxation seven ply strand.

4.6.1.1.1 All prestressing steel shall be free from welded joints and splits, harmful scratches, surface flaws; rough, jagged and imperfect edges and other defects likely to impair its use in prestressed concrete.

4.6.1.2 *Mechanical properties*

Data in respect of modulus of elasticity, relaxation loss at 1 000 h at mean temperature of 20°C, minimum ultimate tensile strength, stress-strain curve, etc, shall necessarily be obtained from manufacturer. Prestressing steel shall be subjected to acceptance tests prior to actual use on the works. The modulus of elasticity value, as per acceptance tests, shall conform to the values assumed in the design which shall be within a range not more than 2.5 percent between the maximum and the minimum.

4.6.1.2.1 For design purposes, the minimum requirements given in the relevant Indian Standards may be adopted.

4.6.2 *Untensioned Steel*

4.6.2.1 The reinforcement used as untensioned steel shall be any of the following conforming to accepted standards [6-5B(8)]:

a) Mild steel and medium tensile steel bars.
b) High strength deformed steel bars.
c) Hard-drawn steel wire fabric.

4.6.2.2 All reinforcement shall be free from loose mill scales, loose rust and coats of paints, oil mud or any other substances which may destroy or reduce bond. Sand blasting or other treatment is recommended to clean reinforcement.

Special precautions like coating of reinforcement may be required for reinforced concrete elements in exceptional cases and for rehabilitation of structures. Specialist literature may be referred to in such cases. Reduction in design bond strength of coated bars shall be looked into.

4.6.2.3 The modulus of elasticity of steel shall be taken as 200 kN/mm^2. The characteristic yield strength of different steel shall be assumed as the minimum yield stress/0.2 percent proof stress specified in the relevant Indian Standard.

4.7 Storage of Materials

Storage of materials shall be as described in good practice [6-5B(9)].

5 CONCRETE

5.1 Grades

The concrete shall be in grades designated as per Table 1.

Table 1 Grade of Concrete

(*Clauses* 5.1, 8.2.2 *and* 20.1)

Sl No.	Grade Designation	Specified Characteristic Compressive Strength of 150 mm Size Cube at 28 Days N/mm^2
(1)	(2)	(3)
i)	M 30	30
ii)	M 35	35
iii)	M 40	40
iv)	M 45	45
v)	M 50	50
vi)	M 55	55
vii)	M 60	60
viii)	M 65	65
ix)	M 70	70
x)	M 75	75
xi)	M 80	80
xii)	M 85	85
xiii)	M 90	90
xiv)	M 95	95
xv)	M 100	100

NOTES

1 In the designation of concrete mix M refers to the mix and the number to the specified compressive strength of 150 mm size cube at 28 days, expressed in N/mm^2.

2 For pre-tensioned prestressed concrete, the grade of concrete shall be not less than M 40.

3 Except where specifically mentioned otherwise, for concrete grade greater than M 60, design parameters given in the Subsection may not be applicable and the values may be obtained from specialized literatures and experimental results.

5.1.1 The characteristic strength of concrete is defined as the strength of the concrete below which not more than 5 percent of the test results are expected to fall.

5.2 Properties of Concrete

5.2.1 *Increase in Strength with Age*

There is normally a gain of strength beyond 28 days. The quantum of increase depends upon the grade and type of cement, curing and environmental conditions, etc. The design should be based on 28 days characteristic strength of concrete unless there is an evidence to justify a higher strength for a particular structure due to age.

5.2.1.1 The rate of increase of compressive strength with age shall be based on actual investigations.

5.2.2 *Tensile Strength of Concrete*

The flexural and splitting tensile strength shall be obtained in accordance with accepted standards [6-5B(10)]. When the designer wishes to use an estimate of the flexural tensile strength from the compressive strength, the following formula may be used:

$$f_{cr} = 0.7\sqrt{f_{ck}}$$

where

f_{cr} = flexural tensile strength, in N/mm^2; and

f_{ck} = characteristic compressive strength of concrete, in N/mm^2.

5.2.3 *Elastic Deformation*

The modulus of elasticity is primarily influenced by the elastic properties of the aggregate and to a lesser extent by the conditions of curing and age of the concrete, the mix proportions and the type of cement. The modulus of elasticity is normally related to the compressive strength of concrete.

5.2.3.1 The modulus of elasticity for concrete may be assumed as follows:

$$E_c = 5\,000\sqrt{f_{ck}}$$

where

E_c = short term static modulus of elasticity, in N/mm^2 ; and

f_{ck} = characteristic compressive strength of concrete, in N/mm^2.

Actual measured values may differ by ±20 percent from the values obtained from the above expression.

5.2.4 *Shrinkage*

The total shrinkage of concrete depends upon the constituents of concrete, size of the member and environmental conditions. For a given humidity and temperature, the total shrinkage of concrete is most influenced by the total amount of water present in the concrete at the time of mixing and, to a lesser extent, by the cement content.

5.2.4.1 The total shrinkage strain is composed of two components, the autogenous shrinkage strain and the drying shrinkage strain.

The value of the total shrinkage strain, ε_{cs} is given by:

$$\varepsilon_{cs} = \varepsilon_{cd} + \varepsilon_{ca}$$

where

ε_{cs} = total shinkage strain;

ε_{cd} = drying shrinkage strain; and

ε_{ca} = autogenous shrinkage strain.

5.2.4.2 The autogenous shrinkage strain develops during hardening of concrete; the major part develops in the early days after casting. Autogenous shrinkage is a linear function of concrete strength. It should be considered specifically when new concrete is cast against hardened concrete.

In the absence of accurate field/laboratory data, the following values may be considered in design:

Grade of Concrete	*Autogenous Shrinkage* ($\varepsilon_{ca} \times 10^6$)
M 30	35
M 35	45
M 45	65
M 50	75
M 60	95

5.2.4.3 The drying shrinkage strain develops slowly, as it is a function of migration of the water through the hardened concrete.

The final value of the drying shrinkage strain, $\varepsilon_{cd,\infty}$ may be taken as equal to $k_h.\varepsilon_{cd}$ Values of ε_{cd} may be taken from the table given below for guidance. These values are expected mean values, with a coefficient of variation of about 30 percent.

f_{ck} MPa	*Unrestrained Drying Shrinkage Values* ($\varepsilon_{cd} \times 10^6$) *for Concrete with Portland Cement for Relative Humidity*	
	50 percent	80 percent
(1)	(2)	(3)
25	535	300
50	420	240
75	330	190

NOTE — The values for the other designated grades may be obtained by interpolation.

k_h is a coefficient depending on the notional size h_0, as given below:

h_0 mm	k_h
100	1.0
200	0.85
300	0.75
≥ 500	0.70

5.2.4.4 The development of autogenous shrinkage with time may be taken as:

$$\varepsilon_{ca}(t) = \beta_{as}(t).\varepsilon_{ca}$$

where

$\beta_{as}(t) = 1\text{-}\exp\left(-0.2\sqrt{t}\right)$ where, t is in days.

5.2.4.5 The development of the drying shrinkage strain in time may be taken as:

$$\varepsilon_{cd}(t) = \beta_{ds}(t, t_s).k_h.\varepsilon_{cd}$$

$$\beta_{ds}(t, t_s) = \frac{(t - t_s)}{(t - t_s) + 0.04\sqrt{h_0^3}}$$

where

t = age of the concrete at the moment considered, in days;

t_s = age of the concrete at the beginning of drying shrinkage, in days; normally this is at the end of curing; and

h_0 = notional size of the cross-section, in mm

= $2A_c/u$, where A_c is the concrete cross-sectional area and u is the perimeter of that part of the cross-section which is exposed to drying.

5.2.5 *Creep*

Creep of concrete depends, in addition to the factors listed in **5.2.4** on the stress in the concrete, age at loading and the duration of loading. As long as the stress in concrete does not exceed one-third of characteristic compressive strength, creep may be assumed to be proportional to the stress.

5.2.5.1 The creep coefficient

$$\phi(t, t_0) = \frac{\varepsilon_{cc}(t)}{\varepsilon_{ci}(t_0)}$$

where

$\varepsilon_{cc}(t)$ = creep strain at time $t > t_0$,

$\varepsilon_{ci}(t_0)$ = initial strain at loading, and

t_0 = initial time of loading.

The creep coefficient $\phi(t,t_0)$ is given by:

$$\phi(t,t_0)=\phi_0.\beta(t,t_0),$$

where

ϕ_0 = notional creep coefficient to which the creep co-efficient reaches asymptotically with time (this can be taken as value reached in 70 years), and

$\beta(t, t_0)$ = coefficient describing development of creep with time (*see* **5.2.5.2**).

The notional creep coefficient ϕ_0 is given by:

$$\phi_0=\phi_{RH}.\beta(f_{cm}).\beta(t_0)$$

where

ϕ_{RH} = factor to allow for the effect of relative humidity on the notional creep coefficient

$$= 1+\frac{1-RH/100}{0.1\sqrt[3]{h_0}} \text{ for } f_{ck}\le 45 \text{ MPa}$$

$$= \left[1+\frac{1-RH/100}{0.1\sqrt[3]{h_0}}.\alpha_1\right].\alpha_2 \text{ for } f_{ck}> 45 \text{ MPa}$$

RH = relative humidity of the ambient environment in percent;

h_0 = notional size of the member, in mm;

= $2A_c/u$;

A_c = cross-sectional area, and

u = perimeter of the member in contact with the atmosphere;

$\beta(f_{cm})$= factor to allow for the effect of concrete strength on the notional creep coefficient

$$=\frac{16.8}{\sqrt{f_{ck}+8}}$$

$\beta(t_0)$ = factor to allow for the effect of concrete age at loading on the notional creep coefficient

$$=\frac{1}{\left(0.1+t_0^{0.20}\right)}$$

Where end results are not sensitive to precise values calculated as given above, the values given in the table below can be considered as final creep coefficient for design for normal weight concrete of grades between M 30 and M 60, subject to condition that the compressive stress does not exceed $0.36 f_{ck}$ at the age of loading, and mean temperature of concrete is between 10°C and 20°C with seasonal variation between -20°C and 40°C. For temperature greater than 40°C the coefficient given may be increased by 10 percent in absence of accurate data.

Age at Loading t_0 (days)	*Creep Coefficient ϕ_o (70 yr, t_0) of an Ordinary Structural Concrete after 70 Years of Loading*					
	Under Dry Atmospheric Conditions (RH 50 Percent) Notional Size ($2A_c/u$)			Under Humid Atmospheric Conditions (Outdoor) (RH 80 Percent) Notional Size ($2A_c/u$)		
	50 mm	150 mm	600 mm	50 mm	150 mm	600 mm
(1)	(2)	(3)	(4)	(5)	(6)	(7)
1	5.8	4.8	3.9	3.8	3.4	3.0
7	4.1	3.3	2.7	2.7	2.4	2.1
28	3.1	2.6	2.1	2.0	1.8	1.6
90	2.5	2.1	1.7	1.6	1.5	1.3
365	1.9	1.6	1.3	1.2	1.1	1.0

5.2.5.2 The development of creep with time may be taken as $\phi(t,t_0)=\beta(t,t_0)\phi_0$

$$\beta(t,t_0)=\left[\frac{t-t_0}{\beta_H+(t-t_0)}\right]^{0.3}$$

where

t = age of concrete in days at the moment considered;

t_0 = age of concrete at loading, in days;

$(t-t_0)$ = duration of loading, in days; and

β_H = a coefficient depending on the relative humidity (RH in percent) and the notional member size (h_0 in mm).

$$= 1.5\left[1+\left(1.2\frac{RH}{RH_0}\right)^{18}\right]h_0+250\le 1\ 500$$

for $f_{ck}\le 45$ MPa

$$= 1.5\left[1+\left(1.2\frac{RH}{RH_0}\right)^{18}\right]h_0+250\alpha_3\le 1500\alpha_3$$

for $f_{ck}> 45$ MPa

where

RH = relative humidity expressed as percent.

RH_0 = 100 (that is, 100 percent relative humidity).

$\alpha_1, \alpha_2, \alpha_3$= coefficients to consider the influence of the concrete strength,

$$\alpha_1 = \left[\frac{45}{f_{ck}+8}\right]^{0.7}, \alpha_2 = \left[\frac{45}{f_{ck}+8}\right]^{0.2}, \alpha_3 = \left[\frac{45}{f_{ck}+8}\right]^{0.5}$$

5.2.6 *Thermal Expansion*

The coefficient of thermal expansion depends on nature of cement, the aggregate, the cement content, the relative humidity and the size of sections. The values of coefficient of thermal expansion for concrete with different aggregates may be taken as given below:

Type of Aggregate	*Coefficient of Thermal Expansion for Concrete / °C*
Quartzite	1.2 to 1.3 × 10^{-5}
Sandstone	0.9 to 1.2 × 10^{-5}
Granite	0.7 to 0.95 × 10^{-5}
Basalt	0.8 to 0.95 × 10^{-5}
Limestone	0.6 to 0.9 × 10^{-5}

6 WORKABILITY OF CONCRETE

The concrete mix proportions chosen should be such that the concrete is of adequate workability for the placing conditions of the concrete and can properly be compacted with the means available. Suggested ranges of values of workability of concrete are given in Part 6 'Structural Design, Section 5 Concrete, Subsection 5A Plain and Reinforced Concrete' of the Code.

7 DURABILITY OF CONCRETE

7.1 General

A durable concrete is one that meets predetermined expectations under the working environment (exposure) conditions during its service life. The materials and mix proportions specified and used should be such as to maintain its integrity and, if applicable, to protect embedded metal from corrosion.

7.1.1 One of the main characteristics influencing the durability of concrete is its permeability to the ingress of water, oxygen, carbon dioxide, chloride, sulphate and other potentially deleterious substances. Impermeability is governed by the constituents and workmanship used in making the concrete. With normal-weight aggregates a suitably low permeability is achieved by having an adequate cement content, sufficiently low free water/cement ratio, by ensuring complete compaction of the concrete, and by adequate curing.

The factors influencing durability include,

a) the environment;
b) the cover to embedded steel;
c) the type and quality of constituent materials;
d) the cement content and water-cement ratio of the concrete;
e) workmanship, to obtain full compaction and efficient curing; and
f) the shape and size of the member.

The degree of exposure anticipated for the concrete during its service life together with other relevant factors relating to mix composition, workmanship, design and detailing should be considered. The concrete mix to provide adequate durability under these conditions should be chosen taking account of the accuracy of current testing regimes for control and compliance as described in this Subsection.

7.2 Requirements for Durability

7.2.1 *Shape and Size* of *Member*

The shape or design details of exposed structures should be such as to promote good drainage of water and to avoid standing pools and rundown of water. Care should also be taken to minimize any cracks that may collect or transmit water. Adequate curing is essential to avoid the harmful effects of early loss of moisture. Member profiles and their intersections with other members shall be designed and detailed in a way to ensure easy flow of concrete and proper compaction during concreting.

Concrete is more vulnerable to deterioration due to chemical or climatic attack when it is in thin sections, in sections under hydrostatic pressure from one side only, in partially immersed sections and at corners and edges of elements. The life of the structure can be lengthened by providing extra cover to steel, by chamfering the corners or by using circular cross-sections or by using surface coatings which prevent or reduce the ingress of water, carbon dioxide or aggressive chemicals.

7.2.2 *Exposure Conditions*

7.2.2.1 *General environment*

The general environment to which the concrete will be exposed during its working life is classified into five levels of severity, that is, mild, moderate, severe, very severe and extreme as described in Table 2.

7.2.2.2 *Abrasion*

Abrasion of concrete surfaces results from friction, which may cause a grinding action; or by repetitive impact and overloading, which causes local crushing.

Abrasion resistant surfaces primarily involve consideration of surface finishing technique curing regime, aggregate characteristics and cement content. Compressive strength of concrete may also provide a relative indication of resistance.

Table 2 Environmental Exposure Conditions

(*Clause* 7.2.2.1)

Sl No. (1)	Environment (2)	Exposure Conditions (3)
i)	Mild	Concrete surfaces protected against weather or aggressive conditions, except those situated in coastal areas
ii)	Moderate	Concrete surfaces sheltered from severe rain or freezing whilst wet Concrete exposed to condensation and rain Concrete continuously under water Concrete in contact or buried under non-aggressive soil/ground water Concrete surfaces sheltered from saturated salt air in coastal area
iii)	Severe	Concrete surfaces exposed to severe rain, alternate wetting and drying or occasional freezing whilst wet or severe condensation Concrete completely immersed in sea water Concrete exposed to coastal environment
iv)	Very severe	Concrete surfaces exposed to sea water spray, corrosive fumes or severe freezing conditions whilst wet Concrete in contact with or buried under aggressive sub-soil/ground water
v)	Extreme	Surface of members in tidal zone and splash zone Members in direct contact with liquid/solid aggressive chemicals

Specialist literatures may be referred to for durability requirements of concrete surfaces exposed to abrasive action, for example in case of machinery and metal tyres.

7.2.2.3 *Freezing and thawing*

Where freezing and thawing actions under wet conditions exist, enhanced durability can be obtained by the use of suitable air entraining admixtures. When concrete lower than grade M 50 is used under these conditions, the mean total air content by volume of the fresh concrete at the time of delivery into the construction should be as follows:

Nominal Maximum Aggregate Size mm	*Entrained Air Percentage*
10	7 ± 1
20	5 ± 1
40	4 ± 1

Since air entrainment reduces the strength, suitable adjustments may be made in the mix design for achieving required strength.

7.2.2.4 *Exposure to sulphate attack*

Table 3 gives recommendations for the type of cement, maximum free water/cement ratio and minimum cement content, which are required at different sulphate concentrations in near actual ground water having *p*H of 6 to 9.

For the very high sulphate concentrations in Class 5 conditions, some form of lining such as polyethylene or polychloroprene sheet; or surface coating based on asphalt, chlorinated rubber, epoxy, or polyurethane materials should also be used to prevent access by the sulphate solution.

7.2.3 *Requirement of Concrete Cover*

7.2.3.1 The protection of the steel in concrete against corrosion depends upon an adequate thickness of good quality concrete.

7.2.3.2 The nominal cover to the reinforcement shall be provided as per **25.4** of Part 6 'Structural Design, Section 5 Concrete, Subsection 5A Plain and Reinforced Concrete' of the Code.

7.2.4 *Concrete Mix Proportions*

7.2.4.1 *General*

The free water cement ratio is an important factor in governing the durability of concrete and should always be the lowest value. Appropriate value for minimum cement content and the maximum free water-cement ratio are given in Table 4 for different exposure conditions. The minimum cement content and maximum water-cement ratio apply to 20 mm nominal maximum size aggregate. For other sizes of aggregate they should be changed as given in Table 5.

7.2.4.2 *Maximum cement content*

Cement content in excess of 450 kg/m^3 should not be used unless special consideration has been given in design to the increased risk of cracking due to drying shrinkage in thin sections, or to thermal stresses in thicker sections.

7.2.5 *Mix Constituents*

7.2.5.1 *General*

For concrete to be durable, careful selection of the mix and materials is necessary, so that deleterious constituents do not exceed the limits.

7.2.5.2 *Chlorides in concrete*

Whenever there is chloride in concrete there is an increased risk of corrosion of embedded steel. The higher the chloride content, or if subsequently exposed to warm moist conditions, the greater the risk of corrosion. All constituents may contain chlorides and concrete may be contaminated by chlorides from the external environment. To minimize the chances of deterioration of concrete from harmful chemical salts, the levels of such harmful salts in concrete coming from concrete materials, that is, cement, aggregates, water and admixtures, as well as by diffusion from the environment should be limited. The total amount of

Table 3 Requirements for Prestressed Concrete Exposed to Sulphate Attack

(*Clauses* 7.2.2.4 *and* 8.1.2)

Sl No.	Class	Concentration of Sulphates, Expressed as SO_3			Type of Cement	Dense, Fully Compacted Concrete, made with 20 mm Nominal Maximum Size Aggregates Complying with the Accepted Standard [6-5B(6)]	
		In Soil		In Ground Water			
		Total SO_3	SO_3 in 2:1 Water: Soil Extract			Minimum Cement Content kg/m³	Maximum Free Water-Cement Ratio
		Percent	g/ℓ	g/ℓ			
(1)	(2)	(3)	(4)	(5)	(6)	(7)	(8)
i)	1	Traces (<0.2)	Less than 1.0	Less than 0.3	Ordinary Portland cement or Portland slag cement or Portland pozzolana cement	280	0.55
ii)	2	0.2 - 0.5	1.0 - 1.9	0.3 - 1.2	Ordinary Portland cement or Portland slag cement or Portland pozzolana cement	330	0.50
					Supersulphated cement or sulphate resisting Portland cement	310	0.50
iii)	3	0.5 - 1.0	1.9 - 3.1	1.2 - 2.5	Supersulphated cement or sulphate resisting Portland cement	330	0.50
					Portland pozzolana cement or Portland slag cement	350	0.45
iv)	4	1.0 - 2.0	3.1 - 5.0	2.5 - 5.0	Supersulphated or sulphate resisting Portland cement	370	0.45
v)	5	More than 2.0	More than 5.0	More than 5.0	Sulphate resisting Portland cement or supersulphated cement with protective coatings	400	0.40

NOTES

1 Cement content given in this table is irrespective of grades of cement. Suitable adjustment may be made in the minimum cement content specified in case of use of aggregate other than 20 mm nominal maximum size.

2 Use of supersulphated cement is generally restricted where the prevailing temperature is above 40 °C.

3 Supersulphated cement gives an acceptable life provided that the concrete is dense and prepared with a water-cement ratio of 0.4 or less, in mineral acids, down to *p*H 3.5.

4 The cement contents given in col 7 of this table are the minimum recommended. For SO_3 contents near the upper limit of any class, cement contents above these minimum are advised.

5 For severe conditions, such as thin sections under hydrostatic pressure on one side only and sections partly immersed, considerations should be given to a further reduction of water-cement ratio.

6 Portland slag cement with slag content more than 50 percent exhibits better sulphate resisting properties.

7 Where chloride is encountered along with sulphates in soil or ground water, ordinary Portland cement with C_3A content from 5 to 8 percent shall be desirable to be used in concrete, instead of sulphate resisting cement.

acid soluble chloride content (as Cl) in the concrete at the time of placing shall be not more than 0.4 kg/m³ of concrete.

The total acid soluble chloride content should be calculated from the mix proportions and the measured chloride contents of each of the constituents. Wherever possible, the total chloride content of the concrete should be determined.

7.2.5.3 *Sulphates in concrete*

Sulphates are present in most cements and in some aggregates; excessive amounts of water-soluble sulphate from these or other mix constituents can cause expansion and disruption of concrete. To prevent this, the total water-soluble sulphate content of the concrete mix, expressed as SO_3 (where $SO_3 = 0.833\ SO_4$) should not exceed 4 percent by mass of the cement in the mix. The sulphate content should be calculated as the total from the various constituents of the mix.

7.2.5.4 *Alkali-aggregate reaction*

Some aggregates containing particular varieties of silica may be susceptible to attack by alkalis (Na_2O and K_2O) originating from cement or other sources, producing an expansive reaction which can cause cracking and disruption of concrete. Damage to concrete from this reaction will normally occur only when all the following are present together:

a) A high moisture level, within the concrete;
b) A cement with high alkali content, or another source of alkali; and
c) Aggregate containing an alkali reactive constituent.

Table 4 Minimum Cement Content, Maximum Water-Cement Ratio and Minimum Grade of Concrete for Different Exposures with Normal Weight Aggregates of 20 mm Nominal Maximum Size

(*Clauses* 7.2.4.1 *and* 8.1.2)

Sl No.	Exposure	Prestressed Concrete		
		Minimum Cement Content kg/m³	Maximum Free Water Cement Ratio	Minimum Grade of Concrete
(1)	(2)	(3)	(4)	(5)
i)	Mild	300	0.55	M 30
ii)	Moderate	300	0.50	M 30
iii)	Severe	320	0.45	M 30
iv)	Very severe	340	0.45	M 35
v)	Extreme	360	0.40	M 40

NOTES

1 Cement content prescribed in this table is irrespective of the grades and types of cement and it is inclusive of additions mentioned in **4.2**. The additions such as fly ash or ground granulated blast furnace slag may be taken into account in the concrete composition with respect to the cement content and water-cement ratio if the suitability is established and as long as the maximum amounts taken into account do not exceed the limit of pozzolana as specified in the accepted standard [6-5B(11)] and that of slag as specified in the accepted standard [6-5B(12)] beyond which these additions, though permitted, shall not be considered for these purposes.

2 The minimum cement content, maximum free water-cement ratio and minimum grade of concrete are individually related to exposure.

Table 5 Adjustments to Minimum Cement Contents for Aggregates Other than 20 mm Nominal Maximum Size

(*Clause* 7.2.4.1)

Sl No.	Nominal Maximum Aggregate Size mm	Adjustments to Minimum Cement Contents in Table 4 kg/m³
(1)	(2)	(3)
i)	10	+ 40
ii)	20	0
iii)	40	– 30

Where the service records of particular cement/aggregate combination are well established, and do not include any instances of cracking due to alkali-aggregate reaction, no further precautions should be necessary. When the materials are unfamiliar, precautions should take one or more of the following forms:

a) Use of non-reactive aggregate from alternate sources.

b) Use of low alkali ordinary Portland cement having total alkali content not more than 0.6 percent [as Na_2O equivalent (expressed as $Na_2O + 0.678\ K_2O$)]. Further advantage can be obtained by use of fly ash conforming to the accepted standard [6-5B(13)] or granulated blast furnace slag conforming to the accepted standard [6-5B(14)] as part replacement of ordinary Portland cement (having total alkali content as Na_2O equivalent not more than 0.6 percent), provided fly ash content is at least 20 percent or slag content is at least 50 percent.

c) Measures to reduce the degree of saturation of the concrete during service such as use of impermeable membranes.

d) Limiting the cement content in the concrete mix and thereby limiting total alkali content in the concrete mix. For more guidance specialist literatures may be referred.

7.2.6 *Concrete in Aggressive Soils and Water*

7.2.6.1 *General*

The destructive action of aggressive waters on concrete is progressive. The rate of deterioration decreases as the concrete is made stronger and more impermeable, and increases as the salt content of the water increases. Where structures are only partially immersed or are in contact with aggressive soils or waters on one side only, evaporation may cause serious concentrations of salts with subsequent deterioration, even where the original salt content of the soil or water is not high.

NOTE — Guidance regarding requirements for concrete exposed to sulphate attack is given in **7.2.2.4**.

7.2.6.2 *Drainage*

At sites where alkali concentrations are high or may become very high, the ground water should be lowered by drainage so that it will not come into direct contact with the concrete.

Additional protection may be obtained by the use of impermeable barriers.

7.2.7 *Compaction, Finishing and Curing*

Adequate compaction without segregation should be ensured by providing suitable workability and by employing appropriate placing and compacting equipment and procedures. Full compaction is particularly important in the vicinity of construction and movement joints and of embedded water bars and reinforcement.

Good finishing practices are essential for durable concrete.

Overworking the surface and the addition of water-cement to aid in finishing should be avoided; the resulting laitance will have impaired strength and durability and will be particularly vulnerable to freezing and thawing under wet conditions.

It is essential to use proper and adequate curing techniques to reduce the permeability of the concrete and enhance its durability by extending the hydration of the cement, particularly in its surface zone (*see also* provisions on curing under **13**).

8 CONCRETE MIX PROPORTIONING

8.1 Mix Proportion

The mix proportions shall be selected to ensure the workability of the fresh concrete and when concrete is hardened, it shall have the required strength, durability and surface finish.

8.1.1 The determination of the proportions of cement, aggregates and water to attain the required strengths shall be made by designing the concrete mix; such concrete shall be called 'Design mix concrete'.

8.1.2 *Information Required*

In specifying a particular grade of concrete, the following information shall be included:

a) Grade designation,
b) Type of cement,
c) Maximum nominal size of aggregates,
d) Minimum cement content (for design mix concrete),
e) Maximum water-cement ratio,
f) Workability,
g) Exposure conditions as per Tables 3 and 4,
h) Maximum temperature of concrete at the time of placing,
j) Method of placing, and
k) Degree of supervision.

8.1.2.1 In appropriate circumstances, the following additional information may be specified:

a) Type of aggregate,
b) Maximum cement content, and
c) Whether an admixture shall or shall not be used and the type of admixture and the conditions of use.

8.2 Design Mix Concrete

8.2.1 As the guarantor of quality of concrete used in the construction, the constructor shall carry out the mix design and the mix so designed (not the method of design) shall be approved by the employer within the limitations of parameters and other stipulations laid down by this section.

8.2.2 The mix shall be designed to produce the grade of concrete having the required workability and a characteristic strength not less than the appropriate values given in Table 1. The target mean strength of concrete mix should be equal to the characteristic strength plus 1.65 times the standard deviation.

8.2.3 Mix design done earlier not prior to one year may be considered adequate for later work provided there is no change in source and the quality of the materials.

8.2.4 *Standard Deviation*

The standard deviation for each grade of concrete shall be calculated separately.

8.2.4.1 *Standard deviation based on test strength of sample*

a) *Number of test results of samples* — The total number of test strength of samples required to constitute an acceptable record for calculation of standard deviation shall be not less than 30. Attempts should be made to obtain the 30 samples, as early as possible, when a mix is used for the first time.
b) *In case of significant changes in concrete* — When significant changes are made in the production of concrete batches (for example, changes in the materials used, mix design, equipment or technical control), the standard deviation value shall be separately calculated for such batches of concrete.
c) *Standard deviation to be brought up to date* — The calculation of the standard deviation shall be brought up to date after every change of mix design.

8.2.4.2 *Assumed standard deviation*

Where sufficient test results for a particular grade of concrete are not available, the value of standard deviation shall be assumed to be 5.0 N/mm^2 for design of mix in the first instance. As soon as the results of samples are available, actual calculated standard deviation shall be used and the mix designed properly.

9 PRODUCTION OF CONCRETE

9.1 Quality Assurance Measures

9.1.1 In order that the properties of the completed structure be consistent with the requirements and the assumptions made during the planning and the design, adequate quality assurance measures shall be taken. The construction should result in satisfactory strength, serviceability and long term durability so as to lower the overall life-cycle cost. Quality assurance in construction activity relates to proper design, use of adequate materials and components to be supplied by the producers, proper workmanship in the execution of works by the contractor and ultimately proper care

during the use of structure including timely maintenance and repair by the owner.

9.1.2 Quality assurance measures are both technical and organizational. Some common cases should be specified in a general Quality Assurance Plan which shall identify the key elements necessary to provide fitness of the structure and the means by which they are to be provided and measured with the overall purpose to provide confidence that the realized project will work satisfactorily in service fulfilling intended needs. The job of quality control and quality assurance would involve quality audit of both the inputs as well as the outputs. Inputs are in the form of materials for concrete; workmanship in all stages of batching, mixing, transportation, placing, compaction and curing; and the related plant, machinery and equipment; resulting in the output in the form of concrete in place. To ensure proper performance, it is necessary that each step in concreting which will be covered by the next step is inspected as the work proceeds (*see also* **17**).

9.1.3 Each party involved in the realization of a project should establish and implement a Quality Assurance Plan, for its participation in the project. Supplier's and subcontractor's activities shall be covered in the plan. The individual Quality Assurance Plans shall fit into the general Quality Assurance Plan. A Quality Assurance Plan shall define the tasks and responsibilities of all persons involved, adequate control and checking procedures, and the organization and maintaining adequate documentation of the building process and its results. Such documentation should generally include,

a) test reports and manufacturer's certificate for materials, concrete mix design details;
b) pour cards for site organization and clearance for concrete placement;
c) record of site inspection of workmanship, field tests;
d) non-conformance reports, change orders;
e) quality control charts; and
f) statistical analysis.

NOTE — Quality control charts are recommended wherever the concrete is in continuous production over considerable period.

9.2 Batching

To avoid confusion and error in batching, consideration should be given to using the smallest practical number of different concrete mixes on any site or in any one plant. In batching concrete, the quantity of both cement and aggregate shall be determined by mass; admixture, if solid, by mass; liquid admixture may however be measured in volume or mass; water shall be weighed or measured by volume in a calibrated tank {*see also* accepted standard [6-5B(15)]}.

For large and medium project sites the concrete shall be sourced from ready-mixed concrete plants or from on site or off site batching and mixing plants {*see* good practice [6-5B(16)]}.

9.2.1 The grading of aggregate should be controlled by obtaining the coarse aggregate in different sizes and blending them in the right proportions, the different sizes being stocked in separate stock-piles. The material should be stock-piled for several hours preferably a day before use. The grading of coarse and fine aggregate should be checked as frequently as possible, the frequency for a given job being determined by the engineer-in-charge to ensure that the specified grading is maintained.

9.2.2 The accuracy of the measuring equipment shall be within ±2 percent of the quantity of cement being measured and within ±3 percent of the quantity of aggregate, admixtures and water being measured.

9.2.3 Proportion/type and grading of aggregates shall be made by trial in such a way so as to obtain densest possible concrete.

9.2.4 It is important to maintain the water-cement ratio constant at its correct value. To this end, determination of moisture content in both fine and coarse aggregates shall be made as frequently as possible, the frequency for a given job being determined by the engineer-in-charge according to weather conditions. The amount of the added water shall be adjusted to compensate for any observed variations in the moisture contents. For the determination of moisture content in the aggregates, accepted standard [6-5B(17)] may be referred to. To allow for the variation in mass of aggregate due to variation in their moisture content, suitable adjustments in the masses of aggregates shall also be made.

9.2.5 No substitutions in materials used on the work or alterations in the established proportions, except as permitted in **9.2.4** shall be made without additional tests to show that the quality and strength of concrete are satisfactory.

9.3 Mixing

Concrete shall be mixed in a mechanical mixer {*see also* accepted standards [6-5B(18)]}. The mixers shall be fitted with water measuring (metering) devices. The mixing shall be continued until there is a uniform distribution of the materials and the mass is uniform in colour and consistency. If there is segregation after unloading from the mixer, the concrete should be remixed.

9.3.1 As a guidance, the mixing time shall be at least 2 min for conventional free fall mixers. For other types of more efficient mixers, manufacturers' recommendations shall be followed.

9.3.2 Workability should be checked at frequent intervals {*see* accepted standard [6-5B(19)]}.

9.3.3 Dosages of retarders, plasticizers and superplasticizers shall be restricted to 0.5, 1.0 and 2.0 percent respectively by mass of cementitious materials and unless a higher value is agreed upon between the manufacturer and the constructor based on performance test.

10 FORMWORK

10.1 The provisions of **10** of Part 6 'Structural Design, Section 5 Concrete, Subsection 5A Plain and Reinforced Concrete' of the Code shall generally apply. In addition, **10.1.1** shall also apply.

10.1.1 Moulds for pre-tension work shall be sufficiently strong and rigid to withstand, without distortion, the effects of placing and compacting concrete as well as those of prestressing in the case of manufacture by the individual mould process where the prestressing tendon is supported by the mould before transfer.

11 ASSEMBLY OF PRESTRESSING AND REINFORCING STEEL

11.1 Prestressing Steel

11.1.1 *Straightness*

11.1.1.1 The wire or strand, as supplied, shall be self-straightening when uncoiled.

11.1.1.2 In the case of high tensile alloy steel bars, any straightening shall be carried out by mechanical means. Bars shall not be bent when their temperature is less than 10°C.

11.1.1.3 In no case heat shall be applied to facilitate straightening or bending of prestressing steel.

11.1.2 *Arrangement and Positioning*

11.1.2.1 All prestressing steel shall be carefully and accurately located in the exact positions shown in the design drawings. The permissible tolerance in the location of the prestressing tendon shall be ±5 mm. Curves or bends in prestressing tendon required by the designer shall be gradual and the prestressing tendon shall not be forced around sharp bends exceeding 1 in 6 both in plan and elevation or be formed in any manner which is likely to set up undesirable secondary stresses. The minimum radius of curvature for curved cables shall be specified to ensure that bursting of side cover both perpendicular to the plane of curvature and in the plane of the ducts do not take place.

11.1.2.2 The relative position of prestressing steel in a cable shall be maintained by suitable means such as sufficiently rigid and adequately distributed spacers.

11.1.2.3 The internal cross-sectional area of duct shall generally be 2.5 to 3 times the nominal area of prestressing tendons to ensure free flow of grout.

11.1.2.4 The method of fixing and supporting the steel in the mould or the formwork shall be such that it is not displaced during the placing or compaction of the concrete or during tensioning of the steel

11.1.2.5 The type of fixtures used for positioning the steel shall be such that it does not give rise to friction greater than that assumed in the design.

11.1.3 *Jointing*

11.1.3.1 Coupling units and other similar fixtures used in conjunction with the prestressing steel shall have an ultimate tensile strength of not less than the individual strengths of the wires or bars being joined.

11.1.3.2 High tensile wire other than hard-drawn wire may be joined together by suitable means provided the strength of such joints is not less than the individual strengths of the wires being joined. Hard-drawn wire used in prestressed concrete work shall be continuous over the entire length of the tendon.

11.1.3.3 High tensile steel bars may be joined together by means of couplings, provided the strength of the coupling is such that in a test of destruction, the bar shall fail before the coupling.

11.1.3.4 Welding shall not be permitted in prestressing steel.

11.1.4 *Cutting*

11.1.4.1 All cutting to length and trimming of the ends of wires or strands shall be done by suitable mechanical cutters. Under factory conditions flame cutting may be permitted.

11.1.4.2 Bars shall preferably be ordered to the exact length required. Any trimming required shall be done only after the bar has been tensioned and the grout has set; it shall then be carried out in accordance with **11.1.4.1.**

11.1.5 *Protection of Prestressing Steel, Sheathing and Anchorages*

In all constructions of the post-tensioned type whether prestressing is subsequently bonded or not bonded with concrete, the prestressing steel, sheathing material forming ducts in concrete and anchorages shall be given adequate protection against corrosion at all stages of construction and during service life.

11.1.5.1 *Construction with unbonded steel embedded in concrete*

For protection of sheathing material forming ducts, the durability requirements shall be followed. Furthermore,

the internal surface of duct, prestressing steel and anchorage shall be protected by following methods in suitable combination depending upon severity of environment and extent of layers of protection considered desirable:

a) Coating of steel and duct by reactive metals like zinc (Zn) or zinc plus aluminium (Zn + Al) preferably applied by hot dipping method.
b) Use of non-corroding sheath material like high density polyethylene and fibre reinforced plastic.
c) Coating of steel by non-reactive materials like epoxy (factory applied).
d) Covering individual uncoated steel or coated steel strands/wires in sheaths formed by extrusion process in factory using non-corroding material like HDPE or similar. The space between sheathing and duct can be filled with corrosion inhibiting materials like grease and wax.
e) In case of large size prestressing units use of protective and replaceable corrosion inhibition material for grouting the ducts such as grease, wax polyurethane foam, wherein any corrosive trace elements are controlled to remain within acceptable limits. Systems for checking the efficacy of the method during service life and provisions for replacing/ making up loss of filler material shall be incorporated.
f) External parts of anchorages and projecting cables should be covered by suitable casing and protected by suitable material and method.

For selection of appropriate method, material specifications and installation process, etc, specialist literature should be referred to.

11.1.5.2 *Construction with unbonded steel and anchorages not embedded in concrete (external prestressing elements)*

The methods given in **11.1.5.1** shall be applicable for this type of construction also. In addition, the material, strength and environmental resistance of the ducts forming external enclosure shall provide adequate mechanical strength and stability against environmental attack, including solar radiation. The ducts should be strong enough to resist pressure from the grouting operations.

11.1.5.3 *Construction with post-tensioned bonded prestressing steel*

Internal prestressing sheathing material as well as prestressing steel is protected by dense alkaline concrete cover, which shall be of quality and thickness as specified. The steel inside ducts is best protected in long terms by cement grouts which are properly executed following recommendations given in **12**.

The protection by grouting can be further augmented by use of methods given below:

a) Use of coated steel using Zn, Zn + Al or epoxy.
b) Use of non-corroding impervious sheathing material like HDPE is beneficial. However, bond between sheathing and concrete and sheathing and grout shall be adequate as needed by design. This method is particularly suitable in presence of migrating water or variable drying/wetting condition of concrete of severe external penetration of corrosive agents.

External parts of anchorages and projecting cables should be covered by suitable casing and protected by suitable material and method.

11.1.5.4 *Protection during construction period*

a) The prestressing steel, sheathing and anchorages shall be manufactured, transported and stored at site in such a way as to provide them with adequate corrosion protection. Use of proper packaging and provision of externally applied passivating agents, oil films, etc, which is carried over in factory itself is recommended.
b) If prestressing steel/metallic sheathing material is left unprotected at site or embedded in concrete during construction period longer than two weeks, it shall be protected by flushing with oil/water mixture (for example cutting oil) with periodic re-flushing at not more than three months interval.
c) After stressing, the sheaths/steel shall be provided with permanent protection as soon as possible, preferably within one week. While providing protection by pressure grouting of cement care should be taken that the neighbouring cables are not penetrated by grout. In case of doubt such cables shall be grouted in immediate sequence before the earlier grout could have set. If the earlier stressed cables are not grouted to avoid this problem, they should be protected by periodic flushing by oil/water mixture as given in (b).

11.1.6 *Nominal Cover to Prestressing Steel*

11.1.6.1 *Nominal cover*

Nominal cover is the design depth of concrete cover. It is the dimension used in design and indicated in drawings.

11.1.6.2 *Nominal cover to meet the durability requirements*

11.1.6.2.1 Minimum values of the nominal cover which should be provided in post-tensioned work, where cables and large-sized bars are used, the minimum clear cover from sheathing/duct shall be at least 75 mm.

11.1.6.2.2 In pre-tensioned work, the cover of concrete measured from the outside of the prestressing tendon shall be as per Table 16 of Part 6 'Structural Design, Section 5 Concrete, Subsection 5A Plain and Reinforced Concrete' of the Code.

11.1.6.3 *Nominal cover to meet specified period of fire resistance*

Minimum values of nominal cover of normal-weight aggregate concrete to be provided to all reinforcement including links to meet specified period of fire resistance shall be as given in Table 16A of Part 6 'Structural Design, Section 5 Concrete, Subsection 5A Plain and Reinforced Concrete' of the Code.

11.1.7 *Spacing*

11.1.7.1 In the case of single wires used in pre-tension system, the minimum clear spacing shall not be less than the greater of the following:

a) 3 times diameter of wire, and
b) Nominal maximum size of aggregate plus 5 mm.

11.1.7.2 In the case of cables or large bars, the minimum clear spacing (measured between sheathings/ ducts, wherever used) shall not be less than the largest of the following:

a) 40 mm,
b) Maximum size of duct or bar, and
c) Nominal maximum size of aggregate plus 5 mm.

11.1.8 *Grouped Cables*

11.1.8.1 Cables or ducts may be grouped together vertically in groups of not more than two.

11.1.8.2 The minimum clear horizontal spacing between groups of cables or ducts of grouped cables shall be greater of the following:

a) 40 mm, and
b) Nominal maximum size of aggregate plus 5 mm

The vertical distance between groups shall not be less than 50 mm. In case there is possibility of obstruction of flow of concrete or in case of severe exposure condition, horizontal grouping should be avoided.

11.2 Sheathing Ducts

The sheathing ducts shall be either of mild steel as per **A-1** or HDPE as per **A-2**. They shall be in as long lengths as practical from handling and transportation considerations without getting damaged. They shall conform to the requirements specified in **A-3** and **A-4** and a test certificate shall be furnished by the manufacturer. The tests specified in **A-4** are to be performed as part of additional acceptance tests for prestressing systems employing corrugated HDPE sheathing ducts and are not meant for routine site testing purposes.

11.3 Untensioned Steel

11.3.1 Provisions for assembly of reinforcement given in Part 6 'Structural Design, Section 5 Concrete, Subsection 5A Plain and Reinforced Concrete' of the Code shall apply.

11.3.2 The requirements of cover and spacing between bars shall conform to Part 6 'Structural Design, Section 5 Concrete, Subsection 5A Plain and Reinforced Concrete' of the Code.

12 PRESTRESSING

12.1 Prestressing Equipment

12.1.1 *Tensioning Equipment*

12.1.1.1 The requirements of **12.1.1** shall apply to both the pre-tensioned and the post-tensioned methods of prestressing concrete except where specifically mentioned otherwise.

12.1.1.2 Prestressing steel may be tensioned by means of hydraulic or mechanical jacks.

The tension equipment shall be such that it facilitates measurement and control of application of force.

The tensioning equipment should be independently supported so that it does not induce any undesirable secondary stresses.

12.1.1.3 The anchorage provided for the temporary gripping of tendons on the tensioning equipment shall be secure and such as not to damage the tendon.

12.1.1.4 Devices attached to the tensioning equipment for measuring the applied force shall be such that they do not introduce errors exceeding 5 percent.

12.1.2 *Temporary Gripping Device*

Prestressing tendons may be gripped by wedges, yokes, double cones or any other approved type of gripping devices. The prestressing wires may be gripped singly or in groups. Gripping devices shall be such that in a tensile test, the wire or wires fixed by them would break before failure of the grip itself.

12.1.3 *Releasing Device*

The releasing device shall be so designed that during the period between the tensioning and release, the tension in the prestressing elements is fully maintained by positive means, such as external anchorages. The device shall enable the transfer of prestress to be carried out gradually so as to avoid large difference of tension between wires in a tendon, severe eccentricities of prestress or the sudden application of stress to the concrete.

12.1.4 *Anchorage Device*

12.1.4.1 The anchorage device may be patented or otherwise, which complies with the requirements laid down under **12.1.4.2** to **12.1.4.5**.

12.1.4.2 The anchoring device shall be strong enough to resist in all respects a force equal to at least the breaking strength of the prestressing tendon it anchors.

12.1.4.3 The anchorage shall transfer effectively and distribute, as evenly as possible, the entire force from the prestressing tendon to the concrete without inducing undesirable secondary or local stresses.

12.1.4.4 The anchorage shall be safe and secure against both dynamic and static loads as well as against impact (*see* Annex B).

12.1.4.5 The anchorage shall have provision for the introduction of a suitable protective medium, such as cement grout, for the protection of the prestressing steel unless alternative arrangements are made.

12.2 Procedure for Tensioning and Transfer

12.2.1 *Stressing*

12.2.1.1 The tensioning of prestressing tendons shall be carried out in a manner that will induce a smooth and even rate of increase of stress in the tendons. The prestressing shall be controlled by measuring both the force applied to the tendon and the elongation of the tendon.

Stressing schedule shall be incorporated in the design, which may include the following:

a) Details of equipment and procedure for applying prestress, specification of one end or simultaneous stressing from both ends of tendons, stressing in single stage or multiple stages, re-stressing for adjustment of force or for monitoring of force, if required, etc.

b) Calculated amount of tensile force and corresponding expected elongation of each tendon when methods described in (a) are followed.

c) Minimum requirements of strength of concrete at transfer (*see also* **15.2**), stressing sequence with respect to age of concrete or stage of construction, requirements with respect to grouting operations of neighbouring tendons.

d) Method(s) of measuring force and elongation.

e) Tolerances/limits of variation from design requirements stated in (a) and (b) beyond which reference should be made to the designer. In the absence of any specified provision provided by the designer method described in **12.2.1.3** may be adopted for acceptance.

f) Assumptions made in calculation of force-elongation relationship should be given. These include effective '*E*' value of tendon, cross sectional area of tendon, coefficient of friction and wobble factor between tendon and duct, assumed slip in anchoring devices if any, efficiency of prestressing jacks where force is measured indirectly by pressure gauges on jacks, corrections to elongation due to changes in gripping length beyond anchorages during stressing and any other relevant information.

12.2.1.2 Any slack in the prestressing tendon shall first be taken up by applying a small initial tension. The initial tension required to remove slackness shall be taken as the starting point for measuring elongation. Further increase of tension shall be carried out in suitable steps and corresponding elongations noted. The 'force-elongation' relationship shall be recorded in tabular and/or graphical form. The magnitude of initial effective elongation corresponding to initial tension applied to remove slackness shall be obtained from the recorded and linearized portion of measured tension-elongation relationship and added to the measured elongation to give the total elongation. Alternatively, the same correction can be carried out graphically as shown in Fig. 1.

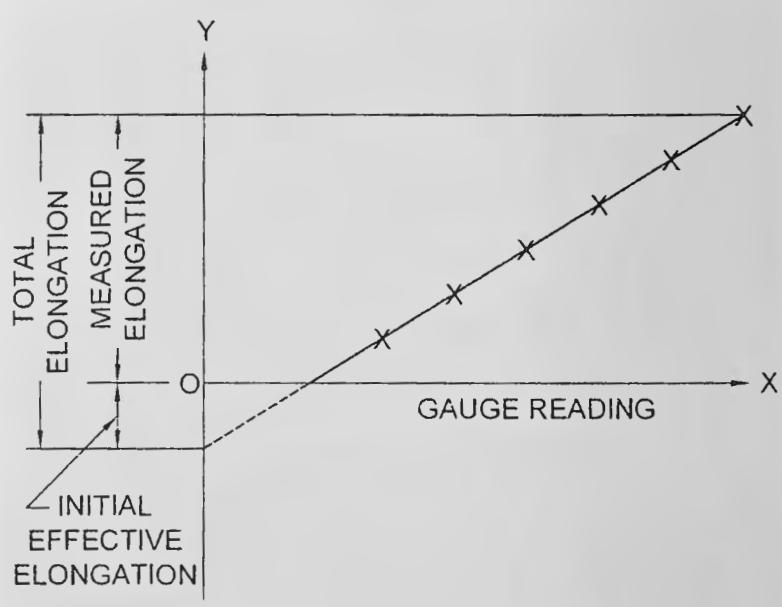

FIG. 1 DETERMINATION OF ACTUAL ELONGATION

12.2.1.3 In practice, the force and elongation of tendon may not exactly match with the expected values given in stressing schedule. In such cases either the force (or the elongation) will be achieved first and the other value lag behind. In such cases the force (or elongation) shall be further increased, but not exceeding 5 percent of the design value till the elongation (or force), which had lagged behind reaches the design value. If, even after reaching 5 percent extra value of the force (or elongation), the other lagged quantity does not reach the design value, reference should be made to the designer for review and corrective action.

12.2.1.4 When two or more prestressing wires or strands are to be tensioned simultaneously by the same tensioning apparatus, care shall be taken to ensure that all such tendons are of the same length from grip to grip.

12.2.1.5 The placement of tendons and the order of stressing and grouting shall be so arranged that the prestressing steel, when tensioned and grouted, does not adversely affect the adjoining ducts.

12.2.2 *Measurement of Prestressing Force*

12.2.2.1 The force induced in the prestressing tendon shall be determined by means of gauges attached to the tensioning apparatus as well as by measuring the extension of the steel. It is essential that both methods are used jointly so that the inaccuracies to which each is singly susceptible are minimized. Due allowance shall be made for the frictional losses in the tensioning apparatus.

12.2.2.2 All dynamometers and pressure gauges including master gauge shall be calibrated by an approved laboratory immediately prior to use and then at intervals not exceeding 3 months and true force determined from the calibration curve. Further, whenever there is a breakage of tendons, the calibration shall be carried out before reuse of the gauges. The pressure gauges shall be accurate within 2 percent of their full capacity.

12.2.2.3 In measuring the extension of prestressing steel, any slip which may occur in the gripping device shall be taken into consideration.

12.2.3 *Breakage of Wires*

The breakage of wires in anyone prestressed concrete member shall not exceed 2.5 percent during tensioning. If the breakages are more than 2.5 percent, it shall be examined and corrective actions taken. Wire breakages after anchorage, irrespective of percentage, shall not be condoned without special investigations.

12.2.4 *Transfer of Prestressing Force*

12.2.4.1 The transfer of the prestress shall be carried out gradually so as to avoid large differences of tension between wires in a tendon, severe eccentricities of prestressing force and the sudden application of stress to the concrete.

12.2.4.2 Where the total prestressing force in a member is built up by successive transfers to the force of a number of individual tendons on to the concrete, account shall be taken of the effect of the successive prestressing.

12.2.4.3 In the long line and similar methods of prestressing, when the transfer is made on several moulds at a time, care shall be taken to ensure that the prestressing force is evenly applied on all the moulds, and that the transfer of prestress to the concrete is uniform along the entire length of the tension line.

12.3 Grouting

The purpose of grouting is to provide permanent protection to the post-tensioned steel against corrosion and to develop bond between the prestressing steel and the surrounding structural concrete. The grout ensures encasement of steel in an alkaline environment for corrosion protection and by filling the duct space, it prevents water collection and freezing.

12.3.1 *Materials*

12.3.1.1 *Water*

Only clean potable water free from impurities conforming to **4.4** shall be permitted. No sea or creek water is to be permitted.

12.3.1.2 *Cement*

Cement used for preparation of grout shall be in accordance with **4.1**.

12.3.1.3 *Sand*

It is not recommended to use sand for grouting of prestressing tendons. In case the internal diameter of the ducts exceeds 150 mm, use of sand may be considered. Sand, if used, shall conform to the accepted standard [6-5B(6)] and shall pass through IS Sieve No. 150. The mass of sand in the grout shall not be more than 10 percent of the mass of cement, unless proper workability can be ensured by addition of suitable plasticizers.

12.3.1.4 *Chemical admixtures*

Chemical admixtures conforming to the accepted standard [6-5B(20)] may be used if tests have shown that their use improves the properties of grout, that is, increasing fluidity, reducing bleeding, entraining air or expanding the grout. Admixtures shall not contain chlorides, nitrates, sulphides, sulphites or any other products which are likely to damage the steel or grout.

When an expanding agent is used, the total unrestrained expansion shall not exceed 10 percent. Aluminium powder as an expanding agent is not recommended for grouting because its long term effects are not free from doubt.

12.3.1.5 *Sheathing*

For requirements of sheathing, **11.2** shall be referred.

12.3.1.6 *Grout openings or vents*

a) All ducts should have grout opening at both ends. For this purpose special openings should be provided where such openings are not available at end anchorages. For draped (curved) cables crown points should have a grout vent. For draped cables longer than 50 m grout vents or drain holes may be provided at or near the lowest points. It is a good practice to provide additional air vents at suitable intervals. All grout openings or vents should include provisions for preventing grout leakage.

b) Standard details of fixing couplers, inlets, outlets and air vents to the duct/anchorage shall be followed as recommended by the supplier of the system of prestressing.

Ducts should be securely fastened at close intervals. All unintended holes or openings in the duct shall be repaired prior to concrete placing. The joints of the couplers and the sheathing should be made water proof by use of tape or similar suitable system capable of giving leak proof joints. Grout openings and vents shall be securely anchored to the duct and to either the forms or to reinforcing steel to prevent displacement during concreting operations due to weight, buoyancy and vibrations.

Ducts require very careful handling as, being of thin metal, they are susceptible to leakage due to corrosion in transit or storage, by tearing ripping in handling particularly when placed adjoining to reinforcing steel, by pulling apart of joints while inserting tendons prior to concreting, or by accidental puncturing while drilling for form ties/inserts or by sparks from welding being done close by. Care shall be taken to avoid any damage by rough use of internal vibrator. Such local damage shall be repaired using tape to make it water tight to prevent ingress of slurry from the fresh concrete.

12.3.2 *Equipment*

12.3.2.1 *Grout colloidal mixer*

It is essential that the grout is maintained in a homogenous state and of uniform consistency by use of suitable agitator so that there is no separation of cement during entire grouting process. It is, therefore necessary that the grout be continuously mixed in a colloidal mixer with a minimum speed of 1 000 rpm and travel of discharge not exceeding 15 m/s.

12.3.2.2 *Grout pump*

The pump should be positive displacement type and should be capable of injecting the grout in a continuous operation and not by way of pulses. The grout pump shall be fitted with a pressure gauge to enable pressure of injection to be controlled. The minimum pressure at which grout should be pumped shall be 0.3 MPa and the grout pump shall have a relief arrangement for bypass of the grout in case of built up of pressure beyond 1 MPa. The capacity of the grout pump should be such as to achieve a forward speed of grout of around 5 to 10 m/min. The slower rates are preferable as they reduce the possibility of occurrence of voids. If the capacity of the pump is large, it is usual to grout two or more cables simultaneously through a common manifold.

Use of hand pumps for grouting is not recommended. Use of compressed air operated equipment for injection is prohibited as it is likely that there will be some air entrapped in grout.

12.3.2.3 *Water pump*

Before commencement of grouting, a stand by direct feed high pressure water pump should be available at site for an emergency.

In case of any problem in grouting the ducts, such pump shall immediately be connected to the duct and all grout flushed by use of high pressure water flushing. It is, therefore, necessary to have adequate storage of clean potable water for operation of the water pump for such emergencies.

12.3.2.4 *Grout screen*

The grouting equipment should contain a screen having a mesh size of IS Sieve No. 106 (IS Sieve No. 150, if sand is used). Prior to introduction into the grout pump, the grout should be passed through such screen. This screen should be easily accessible for inspection and cleaning.

12.3.2.5 *Connections and air vents*

Standard details of fixing inlets, outlets, and air vents to the sheathing and/or anchorage should be followed as recommended by specialist supplier of the system of prestressing. In general, all connections are to be of the 'Quick couple' type and at change of diameters suitable reducers are to be provided.

12.3.3 *Properties of the Grout*

Water-cement ratio should be as low as possible, consistent with workability. This ratio should not normally exceed 0.45.

The temperature of the grout after accounting for the ambient temperature of the structure shall not exceed 25°C.

Before grouting, the properties of the grout mix should be tested in a laboratory depending on the facilities available. Tests should be conducted for each job periodically. The recommended test is described below.

The compressive strength of 100 mm cubes of the grout shall be not less than 27 MPa at 28 days. Cubes shall be cured in a moist atmosphere for the first 24 h and subsequently in water. These tests shall be conducted in advance to ascertain the suitability of the grout mix.

Chlorides from all sources, that is, cement, water, sand, fillers and admixture should not exceed 0.1 percent by mass of the cement.

12.3.4 *Mixing of Grout*

Proportions of materials should be based on field trials made on the grout before commencement of grouting, but subject to the limits specified above. The materials should be measured by weight.

Water should be added to the mixer first, following by Portland cement and sand, if used. Admixture, if any, may be added as recommended by the manufacturer.

Mixing time depends upon the type of the mixer but will normally be between 2 and 3 min. However, mixing should be for such a duration as to obtain uniform and thoroughly blended grout, without excessive temperature increase or loss of expansive properties of the admixtures. The grout should be continuously agitated until it is injected.

Once mixed, no water shall be added to the grout to increase its fluidity.

Hand mixing is not permitted.

12.4 Grouting Operations

12.4.1 *General*

a) Grouting shall be carried out as early as possible but not later than 2 weeks of stressing a tendon. Whenever this stipulation cannot be complied with for unavoidable reasons, adequate temporary protection of the steel against corrosion by methods or products which will not impair the ultimate adherence of the injected grout should be ensured till grouting. The sealing of the anchorage ends after concreting is considered to be a good practice to prevent ingress of water. For structures in aggressive environment, sealing of the anchorage ends is mandatory.

b) Any traces of oil if applied to steel for preventing corrosion should be removed before grouting operation.

c) Ducts shall be flushed with water for cleaning as well as for wetting the surfaces of the duct walls. Water used for flushing should be of same quality as used for grouting. It may, however, contain about 1 percent of slaked lime or quick lime. All water should be drained through the lowest drain pipe or by blowing compressed air through the duct.

d) The water in the duct should be blown out with oil free compressed air.

   Blowing out water from duct for cables longer than 50 m draped up at both ends by compressed air is not effective, outlet/vent provided at or near the lowest point shall be used to drain out water from duct.

e) The connection between the nozzle of the injection pipe and duct should be such that air cannot be sucked in.

f) All outlet points including vent openings should be kept open prior to commencement of injection grout.

g) Before grouting, all air in the pump and hose should be expelled. The suction circuit of the pump should be air-tight.

12.4.2 *Injection of Grout*

a) After mixing, the grout shall be kept in continuous movement.

b) Injection of grout be continuous and should not be interrupted.

c) For vertical cable or cables inclined more than 60° to the horizontal injection shall be effected from the lowest anchorage or vent of the duct.

d) The method of injection shall ensure complete filling of the ducts. To verify this, it is advisable to compare the volume of the space to be filled by the injected grout with the quantity or grout actually injected.

e) Grouting should be commenced initially with a low pressure of injection of up to 0.3 MPa increasing it until the grout comes out at the other end. The grout may be allowed to flow freely from the other end until the consistency of the grout at this end is the same as that of the grout at the injection end. When the grout flows at the other end, it should be closed off and buildup of pressure commenced. Full injection pressure of about 0.5 MPa shall be maintained for at least 1 min before closing the injection pipe. It is a recommended practice to provide a stand pipe at the highest point of the tendon profile to hold all water displaced by sedimentation or bleeding. If

there is a buildup of pressure much in excess of 1 MPa without flow of grout coming at the other end, the grouting operation shall be discontinued and the entire duct flushed with high pressure water. Also, the bypass system indicated in **12.3.2.2** is essential for further safety.

f) In the case of cables draped downwards for example, in cantilever construction simultaneous injection from both ends may be adopted (*see* Fig. 2).

g) Grout not used within 30 min of mixing should be rejected.

h) Disconnection is facilitated if a short length of flexible tube connects the duct and injection pipe. This may be squeezed and cut off after the grout has hardened.

12.4.3 *Precautions and Recommendations for Effective Grouting*

a) In cold and frosty weather, injection should be postponed unless special precautions are taken. If frost is likely to occur within 48 h after injection, heat shall be applied to the member and maintained for at least 48 h after injection so that the temperature of the grout does not fall below 5°C. Prior to commencement of grout, care shall be taken to ensure that the duct is completely free of frost/ice by flushing with warm water but not with steam.

b) When the ambient temperature during the day is likely to exceed 40°C, grouting should be done in the early morning or late evening hours.

c) When the cables are threaded after concreting, the duct shall be temporarily protected during concreting by inserting a stiff rod or a rigid PVC pipe or any other suitable method.

d) During concreting, care shall be taken to ensure that the sheathing is not damaged.

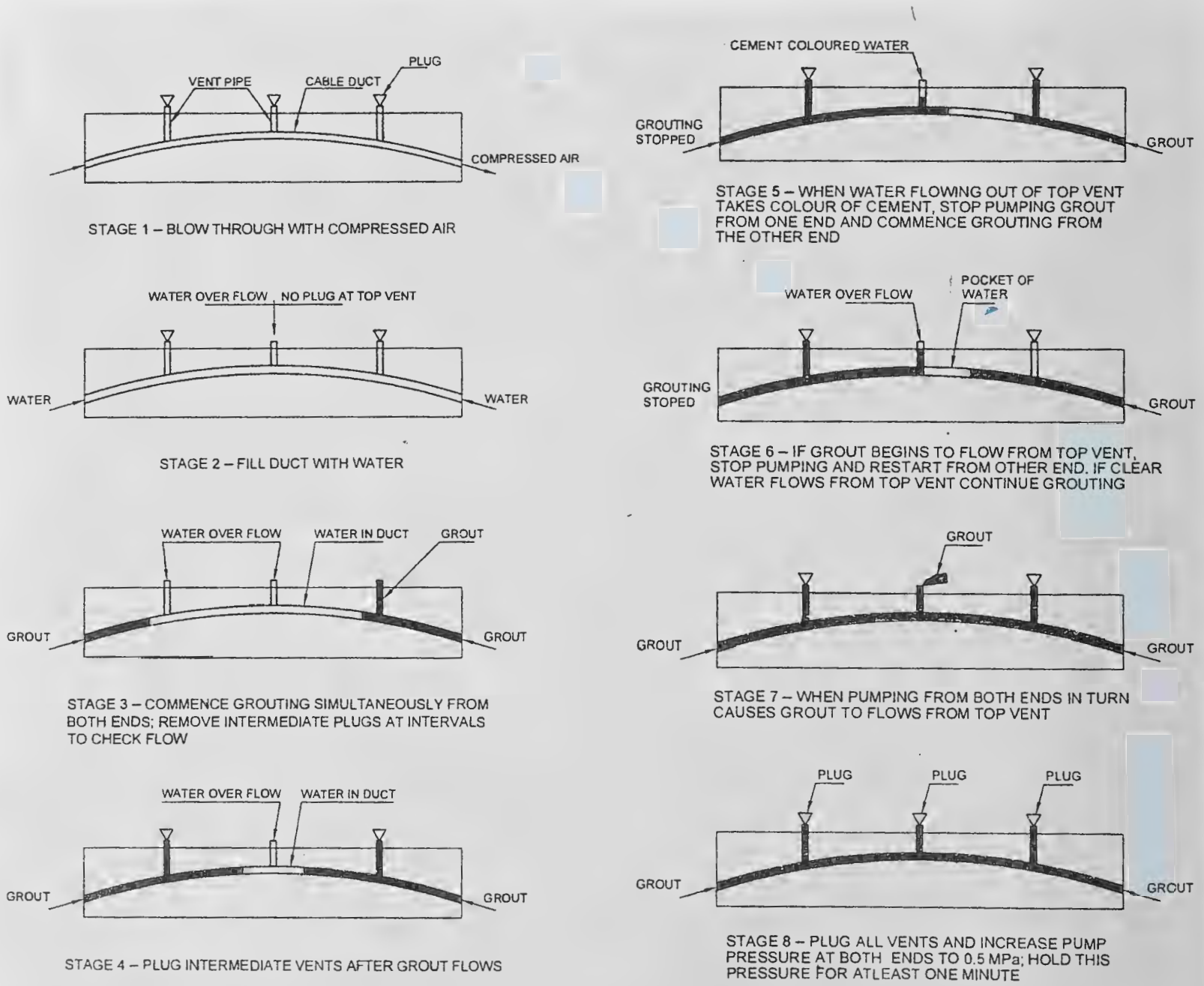

FIG. 2 PROCEDURE FOR GROUTING OF CABLES DRAPED DOWNWARDS

Needle vibrators shall be used with extreme care by well experienced staff only, to ensure the above requirements.

e) It is a good practice to move the cables in both directions during the concreting operations. This can easily be done by light hammering the ends of the wires/strands during concreting. It is also advisable that 3 h to 4 h after concreting the cable should be moved both ways through a distance of about 200 mm. With such movement, any leakage of mortar which has taken place in spite of all precautions loses bond with the cables, thus reducing the chance of blockages. This operation can also be done by fixing prestressing jacks at one end pulling the entire cable and then repeating the operation by fixing the jack at the other end.

f) The cables to be grouted should be separated by as much distance as possible.

g) In case of stage prestressing, cables tensioned in the first stage should not remain ungrouted till all cables are stressed. It is a good practice, while grouting any duct in stage prestressing, to keep all the remaining ducts filled up with water containing 1 percent lime or by running water through such ducts till the grout has set. After grouting the particular cable, the water in the other cables should be drained and removed with compressed air to prevent corrosion.

h) Care should be taken to avoid leaks from one duct to another at joints of precast members.

j) End faces where anchorages are located are vulnerable points of entry of water. They have to be necessarily protected with an effective barrier. Recesses should be packed with mortar concrete and should preferably be painted with water proof paint.

k) After grouting is completed, the projecting portion of the vents should be cut off and the face protected to prevent corrosion.

13 TRANSPORTING, PLACING, COMPACTING AND CURING

13.1 Provisions given Part 6 'Structural Design, Section 5 Concrete, Subsection 5A Plain and Reinforced Concrete' of the Code shall apply. In addition, the provisions given in **13.1.1** and **13.1.2** shall also apply.

13.1.1 *Jointing of Butted Assemblies*

13.1.2 The joints of butted assemblies shall be made of either cement grout or cement mortar or concrete. Cement grouting shall be used for joints up to 12 mm thick. For joints thicker than 12 mm and up to 75 mm, cement mortar shall be used. The mortar which may be made of one part cement and one-and-a-half parts sand shall be of a dry consistency and shall be packed hard in layers so that it rings true. Where joints exceeding 75 mm are encountered, the joint shall be made up of concrete. Use of epoxy may be permitted with the approval of engineer-in-charge.

13.1.2.1 The stressing operations may be carried out in case of mortar joints immediately after placing the mortar but the stress in the mortar shall not exceed 7.0 N/mm^2. In the case of grouted joints and concrete joints the allowable stress in the first 24 h after placing of the grout or concrete in the joint shall approximate as closely as possible to the strength of the grout or concrete used.

13.1.3 The holes for the prestressing tendons shall be accurately located and shall be in true alignment when the units are put together.

13.1.4 Full tensioning shall not be carried out until the strength of the concrete or mortar in the joint has reached twice the stress at transfer.

14 CONCRETING UNDER SPECIAL CONDITIONS

14.1 Work in Extreme Weather Conditions

During hot or cold weather, the concreting should be done as per the procedure set out in good practices [6-5B(21)].

15 SAMPLING AND STRENGTH TEST OF DESIGN CONCRETE MIX

15.1 The provisions given in **14.1** to **14.4** of Part 6 'Structural Design, Section 5 Concrete, Subsection 5A Plain and Reinforced Concrete' of the Code shall apply.

Samples from fresh concrete shall be taken as per accepted standard [6-5B(19)] and cubes shall be made, cured and tested at 28 days in accordance with the accepted standard [6-5B(22)].

15.2 In addition to the tests required as per Part 6 'Structural Design, Section 5 Concrete, Subsection 5A Plain and Reinforced Concrete' of the Code, additional cube tests should be conducted at appropriate intervals to ensure that the concrete strength in the member at transfer conforms to the design requirements.

16 ACCEPTANCE CRITERIA

The provisions of Part 6 'Structural Design, Section 5 Concrete, Subsection 5A Plain and Reinforced Concrete' of the Code shall apply.

17 INSPECTION AND TESTING OF STRUCTURES

The provision of Part 6 'Structural Design, Section 5

Concrete, Subsection 5A Plain and Reinforced Concrete' of the Code shall apply, except for the following:

a) The test load specified in **16.6.2** of Part 6 'Structural Design, Section 5 Concrete, Subsection 5A Plain and Reinforced Concrete' of the Code shall be limited to full dead load of the structure plus design imposed load.

b) For Type 1 and Type 2 structures (*see* **19.3.2**), if within 24 h of removal of the imposed load, the structure does not recover at least 85 percent of the deflection under imposed load, the test may be repeated after a lapse of 72 h. If the recovery is less than 90 percent, the structure shall be deemed to be unacceptable.

c) For Type 3 structures (*see* **19.3.2**), if within 24 h of the imposed load, the structure does not recover at least 75 percent of the deflection under imposed load, the test may be repeated after a lapse of 72 h. If the recovery is less than 80 percent, the structure shall be deemed to be unacceptable.

SECTION 5B (C) GENERAL DESIGN REQUIREMENTS

18 GENERAL DESIGN REQUIREMENTS

18.1 General

The general design requirements for design of prestressed concrete structures shall be as per **17** to **23** of Subsection 5A(C) of Part 6 'Structural Design, Section 5 Concrete, Subsection 5A Plain and Reinforced Concrete' of the Code except as modified and supplemented in **18.2** to **18.6.5.**

18.2 Effects of Prestress

The effects of prestress shall also be taken into account in assessing loads and forces.

18.3 Deductions for Prestressing Tendons

The deductions for prestressing tendons as in **18.3.1** shall be considered for the determination of area, centroid and moment of inertia of the cross-section.

18.3.1 In calculating area, centroid and moment of inertia of a cross-section, deduction (or addition in case of transformed area of tendons) for prestressing tendons shall be made as follows:

a) In the case of pre-tensioned members, where the prestressing tendons are single wires distributed on the cross-section or strands of wires of relatively small cross-sectional area, allowance for the prestressing tendons need not be made. Where allowance is made, it shall be on the basis of (m-1) times the area of the prestressing tendons, m being the modular ratio.

b) In the case of post-tensioned members, deductions shall invariably be made for prestressing tendons, cable ducts or sheaths and such other openings whether they are formed longitudinally or transversally. These deductions need not, however, be made for determining the effect of loads applied after the ducts, sheaths or openings have been grouted or filled with concrete. Where such deductions are not made, a transformed area equivalent to (m–1) times the area of the prestressing tendon shall be taken in calculation, m being the modular ratio.

NOTE — m shall be calculated as E_s/E_c; for values of E_s and E_c, *see* **4.6.1.2.1** and **5.2.3.1**, respectively. Wherever necessary, creep effects shall also be taken into consideration.

c) In case of multi-directional prestressing, loss of area due to presence of ungrouted ducts/ sheaths placed at an angle to the prestressing tendons under consideration may be made at full area (100 percent) of such ducts. In case, such ducts placed at an angle have been grouted prior to stressing of tendons 50 percent of area of such ducts can be considered as effectively available.

18.4 Instability During Erection

In evaluating the slenderness effects during lifting of slender members following factors require consideration:

a) Member geometry,

b) Location of lifting points,

c) Method of lifting, and

d) Tolerances in construction.

All beams, which are lifted on vertical or inclined slings, shall be checked for lateral stability and lateral moment on account of tilting of beam due to inaccuracies in location of lifting points, and due to the lateral bow.

For calculating the factor of safety against lateral instability (γ_i) references may be made to specialist literature; the factor shall not be less than two.

For determining the lateral moment due to tilting, realistic values which are not likely to be exceeded in practice shall be assumed for the eccentricity of lifting points and the lateral bow. The maximum tensile stress for $\gamma_i/(\gamma_i - 1)$ times the lateral moment due to tilting shall not exceed 1.5 N/mm^2.

18.5 Prestressing Requirements

18.5.1 *Maximum Initial Prestress*

At the time of initial tensioning, the maximum tensile

stress, f_{pi} immediately behind the anchorages shall not exceed 76 percent of the ultimate tensile strength, f_{pu} of the wire or bar or strand.

18.5.2 *Losses in Prestress*

While assessing the stresses in concrete and steel during tensioning operations and later in service, due regard shall be paid to all losses and variations in stress from creep of concrete, shrinkage of concrete, relaxation of steel, the shortening (elastic deformation) of concrete at transfer, and friction and slip of anchorage. Unless otherwise determined by actual tests, allowance for these losses shall be made in accordance with the values specified under **18.5.2.1** to **18.5.2.6**.

18.5.2.1 *Loss of prestress due to creep of concrete*

The loss of prestress due to creep of concrete under load shall be determined for all the permanently applied loads including the prestress.

The creep loss due to live load stresses, erection stresses and other stresses of short duration may be ignored. The loss of prestress due to creep of concrete is obtained as the product of the modulus of elasticity of the prestressing steel and the ultimate creep strain of the concrete fibre integrated along the line of centre of gravity of the prestressing tendon at the section at which creep loss is being calculated for bonded tendons. In case of unbonded tendons, the creep loss is a product of modulus of elasticity of prestressing steel and creep strain calculated by integrating and averaging creep stress along the line of centre of gravity between the anchorage points.

The total creep strain during any specific period shall be assumed for all practical purposes, to be the creep strain due to sustained stress equal to the average of the stresses at the beginning and end of the period.

18.5.2.2 *Loss of prestress due to shrinkage of concrete*

The loss of prestress due to shrinkage of concrete shall be the product of the modulus of elasticity of prestressing steel and the shrinkage strain of concrete calculated as per **5.2.4**.

18.5.2.3 *Loss* of *prestress due to relaxation* of *steel*

The relaxation losses in prestressing steels vary with type of steel, initial prestress, age, and temperature and, therefore, shall be determined from experiments. When experimental values are not available, the relaxation losses may be assumed as given in Table 6.

For long term relaxation losses, the values of relaxation losses given in Table 6 may be multiplied by 3.

For periods less than 1 000 h the value of relaxation loss (expressed as percent of 1 000 h value) shall be as shown below:

Time, h		1	5	20	100	200	500	1 000
Percent of Relaxation Loss at 1 000 h	for Normal Relaxation Steel	34	44	55	70	78	90	100
	for Low Relaxation Steel	37	47	57	72	79	90	100

For tendons at higher temperatures or subjected to large lateral loads, greater relaxation losses as specified by the engineer-in-charge shall be allowed for. No reduction in the value of the relaxation losses should be made for a tendon with a load equal to or greater than the relevant jacking force that has been applied for a short time prior to the anchoring of the tendon.

Table 6 Relaxation Losses for Prestressing Steel at 1 000 h at 20 ± 2 °C

(*Clause* 18.5.2.3)

Sl No.	Initial Stress	Relaxation Loss Percent	
		Normal Relaxation	Low Relaxation
(1)	(2)	(3)	(4)
i)	$0.5 f_p$	0	0
ii)	$0.6 f_p$	3.0	1.0
iii)	$0.7 f_p$	5.0	2.5
iv)	$0.8 f_p$	8.0	4.5

NOTE — f_p is the characteristic strength of prestressing steel.

18.5.2.4 *Loss of prestress due to elastic shortening of concrete*

This type of loss occurs when the prestressing tendons upon release from tensioning devices cause the concrete to be compressed. This loss is proportional to the modular ratio and initial stress in the concrete and shall be calculated as below, assuming that the tendons are located at their centroid:

a) For pretensioning, the loss of prestress in the tendons at transfer shall be calculated on a modular ratio basis using the stress in the adjacent concrete.

b) For members with post-tensioned tendons which are not stressed simultaneously, there is a progressive loss of prestress during transfer due to the gradual application of the prestressing forces. This loss of prestress should be calculated on the basis of half the product of the stress in the concrete adjacent to the tendons averaged along their lengths and the modular ratio. Alternatively, the loss of prestress may be exactly computed based on the sequence of tensioning.

18.5.2.5 *Loss of prestress due to slip in anchorage*

Any loss of prestress which may occur due to slip of wires during anchoring or due to the strain of anchorage shall be allowed for in the design.

18.5.2.6 *Loss of prestress due to friction*

The design shall take into consideration all losses in prestress that may occur during tensioning due to friction between the prestressing tendons and the surrounding concrete or any fixture attached to the steel or concrete.

For straight or moderately curved structures, with curved or straight cables, the value of prestressing force P_x at a distance x metre from tensioning end and acting in the direction of the tangent to the curve of the cable, shall be calculated as below:

$$P_x = P_0 e^{-(\mu\alpha + kx)}$$

where

P_0 = prestressing force in the prestressed steel at the tensioning end acting in the direction of the tangent to the force of the cable;

α = cumulative angle through which the tangent to the cable profile has turned between any two points under consideration, in radians;

μ = coefficient of friction in curve; and

k = coefficient for wobble effect.

The value of μ and k given below may be adopted for calculating the friction losses:

Type of High Tensile Steel (1)	*Type of Duct or Sheath* (2)	*Values Recommended to be Used in Design* k per metre (3)	μ (4)
Wire cables	Bright metals	0.009 1	0.25
	Galvanized	0.004 6	0.20
	Lead coated	0.004 6	0.18
Uncoated stress relieved strand	Bright metals	0.004 6	0.25
	Galvanized	0.003 0	0.20
	Lead coated	0.003 0	0.18
	Corrugated HDPE	0.002 0	0.17

18.6 Considerations Affecting Design Details

18.6.1 *Transmission Zone in Pre-Tensioned Members*

18.6.1.1 *Transmission length*

The considerations affecting the transmission length shall be as follows:

a) The transmission length depends on a number of variables, the most important being the strength of concrete at transfer, the size and type of tendon. the surface deformations of the tendon. The transmission length of the tendon towards the top of a unit is usually greater than that at the bottom.

b) The following values may be used, provided the concrete is well-compacted and detailing is as per the relevant provisions of this Section, and its strength at transfer is not less than 35 N/mm² and the tendon is released gradually:

1) For plain and indented wire : 100ϕ
2) For crimped wires : 65ϕ
3) Strands : 30ϕ

c) The development of stress in the tendon may be assumed to vary linearly along the length of the member.

NOTES

1 ϕ is the diameter of the tendon.

2 The transmission length may vary depending on the site conditions and therefore should be determined from tests carried out under the most unfavourable conditions.

18.6.2 *End Zone in Post-Tensioned Members*

18.6.2.1 *Bearing stress*

a) On the areas immediately behind external anchorages, the permissible unit bearing stress on the concrete, after accounting for losses due to elastic shortening and seating of anchorages, shall not exceed,

$$0.48 f_{ci} \sqrt{\frac{A_{br}}{A_{pun}}}$$

or $0.8 f_{ck}$, whichever is smaller, where f_{ci} is the cube strength at transfer, A_{br} is the bearing area and A_{pun} is the punching area.

b) During tensioning, the allowable bearing stress specified in (a) may be increased by 25 percent, provided that this temporary value does not exceed f_{ci}.

c) The effective punching area shall generally be the contact area of the anchorage devices which, if circular in shape, shall be replaced by a square of equivalent area. The bearing area shall be the maximum area of that portion of the member which is geometrically similar and concentric to the effective punching area.

d) Where a number of anchorages are used, the bearing area A_{br} shall not overlap. Where there is already a compressive stress prevailing over the bearing area, as in the case of anchorage placed in the body of a structure, the total stress shall not exceed the limiting values specified in (a), (b) and (e). For stage stressing of cables, the adjacent unstressed anchorages shall be neglected when determining the bearing area.

e) The bearing stress specified in (a) and (b) for permanent and temporary bearing stress may be increased suitably if adequate hoop reinforcement complying with manufacturer's recommendations is provided at the anchorages.

f) When the anchorages are embedded in concrete, the bearing stress shall be investigated after accounting for the surface friction between the anchorage and the concrete. The reinforcement details, concrete strength, cover and other dimensions shall conform to manufacturer's specification/ specialist literature.

18.6.2.2 *Bursting tensile forces*

a) The bursting tensile forces in the end blocks, or regions of bonded post-tensioned members, should be assessed on the basis of the tendon jacking load. For unbonded members, the bursting tensile forces should be assessed on the basis of the tendon jacking load or the load in the tendon at the limit state of collapse, whichever is greater (*see* Annex C).

The bursting tensile force, F_{bst} existing in an individual square end block loaded by a symmetrically placed square anchorage or bearing plate, may be derived from the equation below:

$$\frac{F_{bst}}{P_0} = 0.32 - 0.3\frac{y_{p0}}{y_0}$$

where

F_{bst} = bursting tensile force,

P_0 = load in the tendon assessed as above,

y_{p0} = side of loaded area, and

y_0 = side of end block.

b) The force F_{bst} will be distributed in a region extending from 0.1 y_0 to y_0 from the loaded face of the end block. Reinforcement provided to sustain the bursting tensile force may be assumed to be acting at its design strength (0.87 times characteristic strength of reinforcement) except that the stress should be limited to a value corresponding to a strain of 0.001 when the concrete cover to the reinforcement is less than 50 mm.

c) In rectangular end blocks, the bursting tensile forces in the two principal directions should be assessed on the basis of **18.6.2.2**. When circular anchorage or bearing plates are used, the side of the equivalent square area should be used. Where groups of anchorages or bearing plates occur, the end blocks should be divided into a series of symmetrically loaded prisms and each prism treated in the above manner. For designing end blocks having a cross section different in shape from that of the general cross section of the beam, reference should be made to specialist literature.

d) Compliance with the requirements of (a), (b) and (c) will generally ensure that bursting tensile forces along the load axis are provided for. Alternative methods of design which make allowance for the tensile strength of the concrete may be used, in which case reference should be made to specialist literature.

e) Consideration should also be given to the spalling tensile stresses that occur in end blocks where the anchorage or bearing plates are highly eccentric; these reach a maximum at the loaded face.

18.6.3 *Detailing* of *Reinforcement (Untensioned) in Prestressed Concrete*

18.6.3.1 The detailing of reinforcement in prestressed concrete shall generally conform to the requirements given in relevant clauses of Part 6 'Structural Design, Section 5 Concrete, Subsection 5A Plain and Reinforced Concrete' of the Code. In addition, the requirements of **18.6.3.2** and **18.6.3.3** shall be satisfied.

18.6.3.2 *Transverse reinforcement*

a) The amount and spacing of transverse reinforcement shall be governed by shear and torsion considerations. It is, however, desirable to provide transverse reinforcement in the web when the web is thin and cables are located in the web.

b) In the case of all members subjected to dynamic loading, webs shall be provided with transverse reinforcement, not less than 0.3 percent of the sectional area of the web in plan. This percentage of reinforcement may be reduced to 0.2 percent in members where the depth of the web is not more than four times the thickness of the web. These values may be reduced to 0.2 and 0.15 percent, respectively when high strength reinforcement is used.

c) In case of members not subjected to dynamic loading, reinforcement shall be provided when the depth of the web is more than 4 times the thickness. Such reinforcement shall not be less than 0.1 percent of the sectional area of the web in plan. The reinforcement shall be spaced

at a distance not greater than the clear depth of the web and the size of such reinforcement shall be as small as possible.

d) Reinforcement in the form of links or helix shall be provided perpendicular to the line of heavy compression or shock loading to resist the induced tensile stresses.

18.6.3.3 *Longitudinal reinforcement*

a) A minimum longitudinal reinforcement of 0.2 percent of the total concrete area shall be provided in all cases except in the case of pretensioned units of small sections. This reinforcement may be reduced to 0.15 percent in the case of high yield strength deformed reinforcement. The percentage of steel provided, both tensioned and untensioned taken together, should be sufficient so that when the concrete in the precompressed tensile zone cracks, the steel is in a position to take up the additional tensile stress transferred on to it by the cracking of the adjacent fibres of concrete and a sudden failure is avoided.

b) When the depth of the web exceeds 500 mm, longitudinal distribution reinforcement not less than 0.05 percent of the area of the web shall be provided on each face. The spacing of the individual bars of such reinforcement shall not exceed 200 mm.

c) All untensioned longitudinal reinforcement shall be restrained in the lateral direction.

18.6.4 *Continuity*

In the design of continuous prestressed concrete structures, due consideration shall be given to the effects of the support restraints on both the external moment and the moment due to prestressing.

18.6.5 *Butted Assembly*

Where a butted assembly is used, or where like conditions of abuttal are employed, proper provision shall be made to transfer all shear stresses. Wherever the shear stresses exceed the limits specified under **22.4**, this provision shall include keying of all abutting faces.

SECTION 5B (D) STRUCTURAL DESIGN: LIMIT STATE METHOD

19 SAFETY AND SERVICEABILITY REQUIREMENTS

19.1 Limit State Design

The structural design shall be based on limit state concepts. In this method of design, the structure shall be designed to withstand safely all loads liable to act on it throughout its life; it shall also satisfy the serviceability requirements, such as limitations on deflection, cracking and maximum compression. The acceptable limit for the safety and serviceability requirements before failure occurs is called a 'Limit State'. The aim of design is to achieve acceptable probabilities that the structure will not become unfit for the use for which it is intended, that is, it will not reach a limit state.

19.1.1 All relevant limit states shall be considered in design to ensure an adequate degree of safety and serviceability. In general, the structure shall be designed on the basis of the most critical limit state and shall be checked for other limit states.

19.1.2 For ensuring the specified objective, the design should be based on characteristic values for material strengths and applied loads, which take into account the variations in the material strengths and in the loads to be supported. The characteristic values should be based on statistical data if available; where such data are not available, they should be based on experience. The 'design values' are derived from the characteristic value through the use of partial safety factors, one for material strengths and the other for loads. In the absence of special considerations, these factors should have the values given in **20.4** according to the material, the type of loading and the limit state being considered.

19.2 Limit State of Collapse

The limit state of collapse of the structure or part of the structure could be assessed from rupture of one or more critical sections and from buckling due to elastic or plastic instability (including the effects of sway where appropriate) or overturning. The resistance to bending, shear, torsion and axial loads at every section shall not be less than appropriate value at that section produced by the probable most unfavourable combination of loads on the structure using the appropriate partial safety factors.

19.3 Limit States of Serviceability

19.3.1 *Limit State* of *Serviceability* : *Deflection*

The deflection of a structure or part thereof shall not adversely affect the appearance or functional requirements of the structure or finishes or partitions. The deflection shall generally be limited to the following:

a) The final deflection, due to all loads including the effects of temperature, creep and shrinkage and measured from the as-cast level of the supports of floors, roofs and all other horizontal members, should not normally exceed span/250.

b) The deflection including the effects of temperature, creep and shrinkage occurring after erection of partitions and the application of finishes should not normally exceed span/350 or 20 mm, whichever is less.

c) If finishes are to be applied to prestressed concrete members, the total upward deflection should not exceed span/300, unless uniformity of camber between adjacent units can be ensured.

19.3.2 *Limit State of Serviceability : Cracking*

Cracking of concrete shall not affect the appearance or durability of the structure. The criteria of limit state of cracking for the three types of prestressed concrete members shall be as follows:

a) For *Type* 1, no tensile stress.

b) For *Type* 2, tensile stresses are allowed but no visible cracking.

c) For *Type* 3, cracking is allowed, but should not affect the appearance or durability of the structure; the acceptable limits of cracking would vary with the type of structure and environment and will vary between wide limits and the prediction of absolute maximum width is not possible.

NOTE — For design of Type 3 members, as a guide, the following may be regarded as reasonable limits. The surface width of cracks should not, in general, exceed 0.1 mm for members exposed to a particularly aggressive environment such as the 'severe category' and not exceeding 0.2 mm for all other members.

19.3.3 The flexural tensile stress at any section of the structure, both at transfer and under the most unfavourable combination of design loads, shall satisfy the criteria for the corresponding type of structure.

19.3.4 *Limit State* of *Serviceability : Maximum Compression*

The compressive stresses both at transfer and under design loads shall be limited to the values given in **23.3** for all types of structures.

19.3.5 *Other Limit States*

Additional limit states such as limiting vibrations for human comforts shall be complied with to meet the functional requirements of such structures as may be applicable.

20 CHARACTERISTIC AND DESIGN VALUES AND PARTIAL SAFETY FACTORS

20.1 Characteristic Strength of Materials

The term 'characteristic strength' means that value of the strength of the material below which not more than 5 percent of the test results are expected to fall. The characteristic strength for concrete shall be in accordance with Table 1. The characteristic strength shall be assumed for prestressing steel and the characteristic strength for reinforcing steel shall be assumed as minimum yield/0.2 percent proof stress.

20.2 Characteristic Loads

The term 'characteristic load' means that value of load which has a 95 percent probability of not being exceeded during the life of the structure. Since data are not available to express loads in statistical terms, for the purpose of this Section, the dead load, imposed load, wind load, seismic forces and snow load as given in **2**, **3**, **4**, **5** and **6** of Part 6 'Structural Design, Section 1 Loads, Forces and Effects' of the Code shall be assumed as the characteristic loads.

20.3 Design Values

20.3.1 *Materials*

The design strength of the materials, f_d is given by:

$$f_d = \frac{f_m}{\gamma_m}$$

where

f_m = characteristic strength of the material (*see* **20.1**), and

γ_m = partial safety factor appropriate to the material and the limit state being considered (*see* **20.4**).

20.3.2 *Loads*

The design load, F_d is given by:

$$F_d = F\gamma_f$$

where

F = characteristic load (*see* **20.2**), and

γ_f = partial safety factor appropriate to the nature of loading and the limit state being considered (*see* **20.4**).

20.3.3 *Consequences* of *Attaining Limit State*

Where the consequences of a structure attaining a limit state are of a serious nature such as huge loss of life and disruption of the economy, higher values for γ_m and γ_f than those given under **20.4.1** and **20.4.2** may be applied.

20.4 Partial Safety Factors

20.4.1 *Partial Safety Factor* γ_m *for Material Strength*

20.4.1.1 When assessing the strength of a structure or structural member for the limit state of collapse, the values of partial safety factor γ_m should be taken as 1.5 for concrete and 1.15 for steel.

NOTE — γ_m values are already incorporated in the equations and tables given in this Section.

20.4.1.2 When assessing the deflection, the material properties such as modulus of elasticity of concrete should be taken as those associated with the characteristic strength of the material and safety factor shall not be applied.

20.4.2 *Partial Safety Factor* γ_f *for Loads*

The value of γ_f given in Table 7 shall normally be used.

21 ANALYSIS

21.1 Analysis of Structure

Methods of analysis as in Part 6 'Structural Design, Section 5 Concrete, Subsection 5A Plain and Reinforced Concrete' of the Code shall be used. The material strength to be assumed shall be characteristic values in the determination of elastic properties of members, irrespective of the limit state being considered. Redistribution of the calculated moments may be made as given in **21.1.1**.

21.1.1 *Redistribution of Moments in Continuous Beams and Frames*

The redistribution of moments may be carried out satisfying the following conditions:

a) Equilibrium between the internal forces and the external loads is maintained.

b) The ultimate moment of resistance provided at any section of a member is not less than 80 percent of the moment at that section obtained from an elastic maximum moment diagram covering all appropriate combinations of loads.

c) The elastic moment at any section in a member due to a particular combination of loads shall not be reduced by more than 20 percent of numerically largest moment given anywhere by the elastic maximum moment diagram for the particular member, covering all appropriate combination of loads.

d) At sections where the moment capacity after redistribution is less than that from the elastic maximum moment diagram, the following relationship shall be satisfied:

$$\frac{x_u}{d} + \frac{\delta_M}{100} \leq 0.6$$

where

x_u = depth of neutral axis,

d = effective depth, and

δ_M = percentage reduction in moment.

e) In structures in which the structural frame provides the lateral stability, the reduction in moment allowed by condition given in **21.1.1** (c) shall be restricted to 10 percent for structures over 4 storeys in height.

21.1.2 *Analysis of Slabs Spanning in Two Directions at Right Angles*

In general, the provisions of Part 6 'Structural Design, Section 5 Concrete, Subsection 5A Plain and Reinforced Concrete' of the Code shall apply.

22 LIMIT STATE OF COLLAPSE

22.1 Limit State of Collapse: Flexure

22.1.1 *Assumptions*

Design for the limit state of collapse in flexure shall be

Table 7 Values of Partial Safety Factor (γ_f) For Loads

(*Clause* 20.4.2)

Sl No.	Load Combination	Limit State of Collapse				Limit States of Serviceability			
		DL	IL	WL	P	DL	IL	WL	P
(1)	(2)	(3)	(4)	(5)	(6)	(7)	(8)	(9)	(10)
i)	DL + IL + P	1.5	1.5	—	1.0	1.0	1.0	—	1.1 or 0.9 [2]
ii)	DL + WL + P	1.5 or 0.9 [1]	—	1.5	1.0	1.0	—	1.0	1.1 or 0.9 [2]
iii)	DL + IL + WL + P	1.2	1.2	1.2	1.0	1.0	0.8	0.8	1.1 or 0.9 [2]

[1] This value is to be considered when stability against overturning or stress reversal is critical.

[2] The structure shall be checked both for upper characteristics values and lower characteristics value shown. The values are for post tensioning with bonded tendons. In case of pretensioning or unbonded tendons, it shall be taken as 1.05 or 0.95 instead of the above value.

NOTES

1 While considering earthquake effects, substitute EL for WL.

2 While assessing the long-term effects due to creep, the dead load and that part of the imposed load likely to be permanent may only be considered.

3 While verifying the limit state for stability, with external prestress where an increase of the value of prestress can be unfavourable, partial safety factor of 1.3 shall be used.

based on the assumptions given below:

a) Plane sections normal to the axis remain plane after bending.

b) The strain in the bonded reinforcement or bonded prestressing steel whether in tension or in compression is the same as that in the surrounding concrete.

c) The maximum strain in concrete at the outermost compression fibre is taken as 0.003 5 in bending.

d) The relationship between the compressive stress distribution in concrete and the strain in concrete may be assumed to be rectangle, trapezoid, parabola or any other shape which results in prediction of strength in substantial agreement with the results of tests. An acceptable stress-strain curve is given in Fig. 3. For design purposes, the compressive strength of concrete in the structure shall be assumed to be 0.67 times the characteristic strength. The partial safety factor $\gamma_m = 1.5$ shall be applied in addition to this.

NOTE — For the stress-strain curve in Fig. 3, the design stress block parameters for rectangular section are as follows (*see* Fig. 4):

Area of stress block $= 0.36 f_{ck} x_u$

Depth of centre of compressive force from the extreme fibre in compression $= 0.42 x_u$

where

f_{ck} = characteristic compressive strength of concrete, and

x_u = depth of neutral axis.

e) The tensile strength of the concrete is ignored.

f) The stresses in bonded prestressing tendons, whether initially tensioned or untensioned, and in additional reinforcement are derived from the representative stress-strain curve for the type of steel used given by the manufacturer or typical curves given in Fig. 5 for prestressing tendons and in Part 6 'Structural Design, Section 5 Concrete, Subsection 5A Plain and Reinforced Concrete' of the Code for reinforcement. For design purposes, the partial safety factor γ_m equal to 1.15 shall be applied. In addition, the tendon will have an initial prestrain due to prestress after all losses.

For members with permanently unbonded internal or externally prestressed tendons, the deformation of the whole member shall be taken into account for calculating strain and stress in the tendon at ultimate condition. In the absence of rigorous analysis, the strain in unbonded tendon shall be assumed not to increase above the initial value due to prestress after all losses.

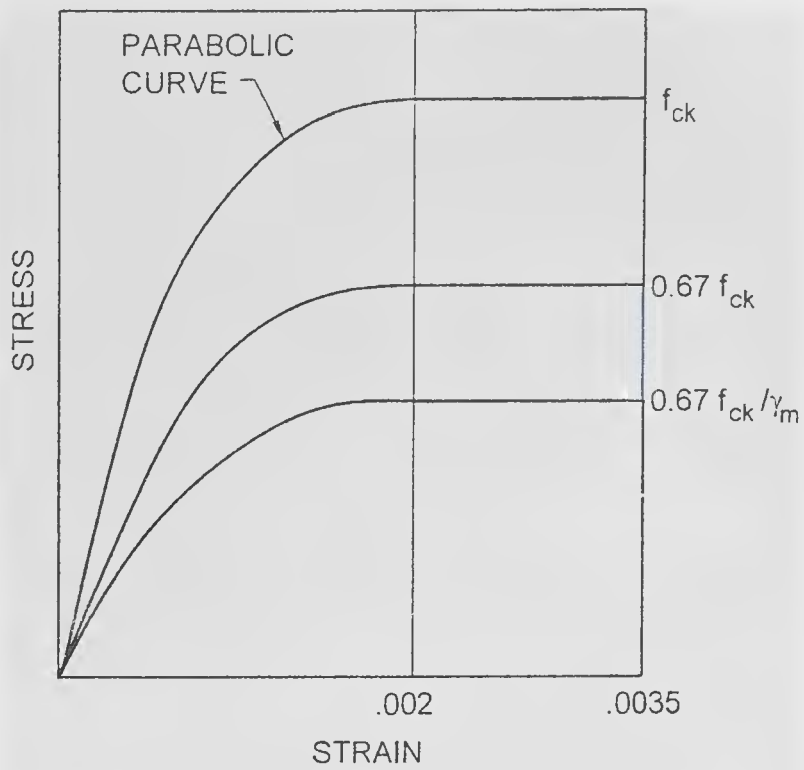

FIG. 3 STRESS STRAIN CURVE FOR CONCRETE

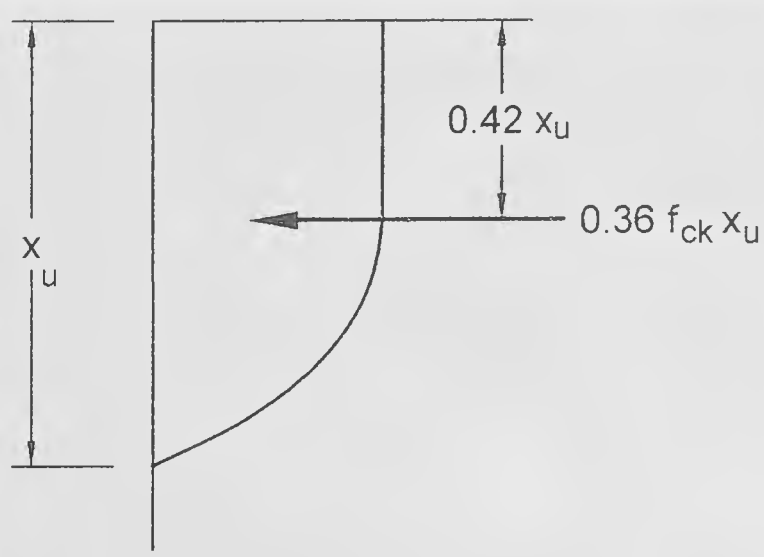

FIG. 4 STRESS BLOCK PARAMETERS

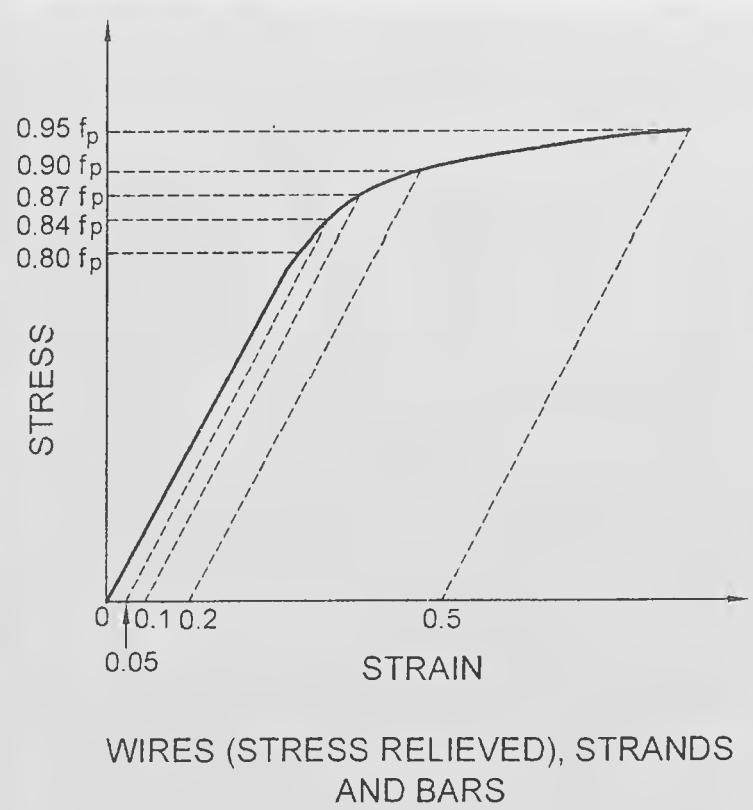

FIG. 5 REPRESENTATIVE STRESS STRAIN CURVES FOR PRESTRESSING STEEL

22.1.2 *Design Formulae*

In the absence of an analysis based on the assumptions given in **22.1.1,** the moment of resistance of rectangular sections and flanged sections in which the neutral axis lies within the flange may be obtained by the procedure given in Annex C.

For flanged sections in which the neutral axis lies outside the flange, the moment of resistance shall be determined using assumptions given in **22.1.1.**

22.2 Limit State of Collapse: Compression

Prestressed concrete compression members in framed structures, where the mean stress in the concrete section imposed by tendons is less than 2.5 N/mm^2, may be analysed as reinforced concrete compression members in accordance with Part 6 'Structural Design, Section 5 Concrete, Subsection 5A Plain and Reinforced Concrete' of the Code, in other cases specialist literature may be referred to.

22.3 Limit State of Collapse: Tension

Tensile strength of the tension members shall be used on the design strength (0.87 times characteristic strength of prestressing tendons) and the strength developed by any additional reinforcement. The additional reinforcement may usually be assumed to be acting at its design stress (0.87 times characteristic strength of reinforcement); in special cases it may be necessary to check the stress in the reinforcement using strain compatibility.

22.4 Limit State of Collapse: Shear

The ultimate shear resistance of the concrete along, V_c, should be considered at both conditions uncracked and cracked in flexure, the lesser value taken and, if necessary, shear reinforcement provided.

22.4.1 *Section Uncracked in Flexure*

The ultimate shear resistance of a section uncracked in flexure, $V_c = V_{co}$, is given by:

$$V_{co} = 0.67\, bD\, \sqrt{\left(f_t^2 + 0.5 f_{cp} f_t\right)}$$

where

b = breadth of the member which for T, I and L beams should be replaced by breadth of the rib b_w,

D = overall depth of the member,

f_t = maximum principal tensile given by $0.24\sqrt{f_{ck}}$ taken as positive where f_{ck} is the characteristic compressive strength of concrete, and

f_{cp} = compressive stress at centroidal axis due to prestress taken as positive.

Where the position of a duct coincides with the position of maximum principal tensile stress, for example, at or near the junction of flange and the web near a support, the value of b should be reduced by the 1.2 times the diameter of duct if ungrouted metallic ducts or, grouted or ungrouted plastic ducts are used or in case of unbonded tendons and by half the diameter of the duct if grouted metallic ducts are used.

In flanged members where the centroidal axis occurs in the flange, the principal tensile stress should be limited to 0.24 $\sqrt{f_{ck}}$ at the intersection of the flanged web; in this calculation, 0.8 of the stress due to prestress at this intersection may be used, in calculating V_{co}.

For a section uncracked in flexure and with inclined tendons or vertical prestress, the component of prestressing force normal to the longitudinal axis of the member may be added to V_{co}.

22.4.2 *Sections Cracked in Flexure*

The ultimate shear resistance of a section cracked in flexure, $V_c = V_{cr}$ is given by:

$$V_{cr} = \left(1 - 0.55\frac{f_{pe}}{f_p}\right)\zeta_c bd + M_0 \frac{V}{M}$$

where

f_{pe} = effective prestress after all losses have occurred, which shall not be taken as greater than $0.6 f_p$,

f_p = characteristic strength of prestressing steel,

ζ_c = ultimate shear stress capacity of concrete obtained from Table 8,

b = breadth of the member, which, for flanged sections, shall be taken as the breadth of the web (b_w),

d = distance from the extreme compression-fibre to the centroid of the tendons at the section considered,

M_0 = moment necessary to produce zero stress in the concrete at the depth, given by:

$$M_0 = 0.8 f_{pt} \frac{I}{y}$$

where f_{pt} is the stress due to prestress only at depth of d and distance y from the centroid of the concrete section which has second moment of area I, and

V and M = shear force and bending moment respectively, at the section considered due to ultimate loads.

V_{cr} should be taken as not less than $0.1bd\sqrt{f_{ck}}$

The value of V_{cr} calculated at a particular section may be assumed to be constant for a distance equal to $d/2$,

measured in the direction of increasing moment, from that particular section.

For a section cracked in flexure and with inclined tendons, the component of prestressing forces normal to the longitudinal axis of the member should be ignored.

Table 8 Design Shear Strength of Concrete, ζ_c, N/mm²

(*Clause* 22.4.2)

Sl No.	$100\frac{A_p}{bd}$	Concrete Grade		
		M 30	M 35	M 40 and above
(1)	(2)	(3)	(4)	(5)
i)	≤ 0.15	0.29	0.29	0.30
ii)	0.25	0.37	0.37	0.38
iii)	0.50	0.50	0.50	0.51
iv)	0.75	0.59	0.59	0.60
v)	1.00	0.66	0.67	0.68
vi)	1.25	0.71	0.73	0.74
vii)	1.50	0.76	0.78	0.79
viii)	1.75	0.80	0.82	0.84
ix)	2.00	0.84	0.86	0.88
x)	2.25	0.88	0.90	0.92
xi)	2.50	0.91	0.93	0.95
xii)	2.75	0.94	0.96	0.98
xiii)	3.00	0.96	0.99	1.01

NOTE — A_p is the area of prestressing tendon.

22.4.3 *Shear Reinforcement*

22.4.3.1 When V, the shear force due to the ultimate loads, is less than V_c, the shear force which can be carried by the concrete, minimum shear reinforcement should be provided in the form of stirrups such that:

$$\frac{A_{sv}}{bs_v} = \frac{0.4}{0.87 f_y}$$

where

A_{sv} = total cross-sectional area of stirrup legs effective in shear,

b = breadth of the member which for T, I and L beams should be taken as the breadth of the rib, b_w,

s_v = stirrup spacing along the length of the member, and

f_y = characteristic strength of the stirrup reinforcement which shall not be taken greater than 415 N/mm².

However, shear reinforcement need not be provided in the following cases:

a) Where V is less than 0.5 V_c, and

b) In members of minor importance.

22.4.3.2 When V exceeds V_c, shear reinforcement shall be provided such that:

$$\frac{A_{sv}}{s_v} = \frac{V - V_c}{0.87 f_y d_t}$$

In rectangular beams, at both corners in the tensile zone, a stirrup should pass around a longitudinal bar, a tendon or a group of tendons having a diameter not less than the diameter of the stirrup. The depth d_t is then taken as the depth from the extreme compression fibre either to the longitudinal bars or to the centroid of the tendons, whichever is greater.

The spacing of stirrups along a member should not exceed 0.75 d_t nor 4 times the web thickness for flanged members. When V exceeds 1.8 V_c, the maximum spacing should be reduced to 0.5 d_t. The lateral spacing of the individual legs of the stirrups provided at a cross-section should not exceed 0.75 d_t.

22.4.4 *Maximum Shear Forces*

In no circumstances should the shear force V, due to ultimate loads, exceed the appropriate values given in Table 9 multiplied by *bd*.

Table 9 Maximum Shear Stress

(*Clause* 22.4.4)

Concrete Grade	M 30	M 35	M 40	M 45	M 50	M 55 and Over
(1)	(2)	(3)	(4)	(5)	(6)	(7)
Maximum shear stress, N/mm²	3.5	3.7	4.0	4.3	4.6	4.8

22.5 Limit State of Collapse: Torsion

22.5.1 *General*

In general, where the torsional resistance or stiffness of members has not been taken into account in the analysis of the structure, no specific calculations for torsion will be necessary, adequate control in torsional cracking being provided by the required nominal shear reinforcement. Where the torsional resistance or stiffness of members is taken into account in the analysis, the members shall be designed for torsion.

22.5.2 *Application of Design Rules for Torsion*

The design rules laid down in **22.5.3** to **22.5.5** apply to,

a) beams of solid rectangular cross-section ($D > b$),

b) hollow rectangular beams with $D > b$ and with a wall thickness $t \geq b/4$, and

c) T-beams and I-beams.

In all these cases the average intensity of prestress in the concrete shall be less than $0.3 f_{ck}$.

22.5.3 *Longitudinal Reinforcement*

22.5.3.1 The longitudinal reinforcement shall be designed to resist an equivalent ultimate bending moment M_{e1} given by:

$$M_{e1} = M + M_t$$

where

M = applied ultimate bending moment at the cross-section acting in combination with T;

M_t = $T\sqrt{1+\frac{2D}{b}}$, the sign of M_t being the same as that of M;

D = overall depth of the beam; and

b = breadth of the member which for T and I beams shall be taken as the breadth of the web, b_w.

22.5.3.2 Where the numerical value of M is less than that of M_t, the member shall also be designed to withstand a moment M_{e2} given by:

$$M_{e2} = M_t - M$$

the moment M_{e2} being taken as acting in the opposite sense to the moment M.

22.5.3.3 Where the numerical value of M is less than or equal to that of M_t, the beam shall be designed to withstand an equivalent transverse bending moment M_{e3} (not acting simultaneously with M_{e1}), given by:

$$M_{e3} = M_t\left(1+\frac{x_1}{2e}\right)^2\left(\frac{1+\frac{2b}{D}}{1+\frac{2D}{b}}\right)$$

and acting about an axis at right angles to the axis of M, where x_1 is the smaller dimension of a closed hoop used as torsional shear reinforcement and e is as defined in **22.5.4.1.**

22.5.4 *Transverse Reinforcement*

22.5.4.1 *Torsional moment and shear carried by concrete*

The reduced torsional moment carried by the concrete T_{c1} is given by:

$$T_{c1} = T_c\left(\frac{e}{e+e_c}\right)$$

where

$$T_c = \sum 0.15b^2D\left(1-\frac{b}{3D}\right)\lambda_v\sqrt{f_{ck}}$$

$$e = \frac{T}{V}$$

$$e_c = \frac{T_c}{V_c}$$

$$\lambda_v = \sqrt{\left(1+12\frac{f_{cp}}{f_{ck}}\right)}$$

In the above expressions,

T_c = torsional moment carried by concrete;

b = breadth of the member, which for T and I beams shall be taken as the breadth of the web, b_w;

D = overall depth of beam;

f_{ck} = characteristic compressive strength of concrete;

T = torsional moment applied to a cross-section under ultimate load conditions;

V = shearing force at a cross-section calculated for the specified ultimate loads;

V_c = theoretical shear strength at a cross-section, assuming the most unfavourable conditions for inclined cracking, that is, smaller of V_{co} and V_{cr} (*see* **22.4.1** and **22.4.2**); and

f_{cp} = average intensity of effective prestress in concrete at this section.

22.5.4.2 The shear force carried by the concrete V_{c1} is given by:

$$V_{c1} = V_c\frac{e}{e+e_c}$$

where

V_c = smaller of V_{co} and V_{cr} obtained as in **22.4.1** and **22.4.2**.

22.5.4.3 *Design of transverse reinforcement*

The area of cross-section, A_{sv} of the closed stirrup enclosing the corner longitudinal bars shall be taken as the larger of the following two values:

$$A_{sv} = \frac{M_t s_v}{1.5b_1d_1f_y}, \text{ and}$$

$$A_{sv} = A_v + 2A_t$$

where

$$A_v = \frac{(V-V_{c1})s_v}{0.87f_yd_1}$$

$$A_t = \frac{(T-T_{c1})s_v}{0.87b_1d_1f_y}$$

In the above expressions,

M_t = as defined in **22.5.3.1**,

s_v = spacing of the stirrup reinforcement,

b_1 = centre-to-centre distance between corner bars in the direction of the width,

d_1 = centre-to-centre distance between corner bars in the direction of the depth,

f_y = characteristic strength of shear reinforcement,

V = as defined in **22.5.4.1**,

V_{c1} = as defined in **22.5.4.2**, and

T and T_{c1} = as defined in **22.5.4.1**.

22.5.4.4 *Minimum reinforcement*

The value of A_{sv} shall not be taken lesser than that given by:

$$\frac{A_{sv}}{bs_v} = \frac{0.4}{0.87 f_y}$$

There shall be at least one longitudinal bar not less than 12 mm in diameter in each corner of the stirrups.

22.5.5 *Distribution of Torsion Reinforcement*

When a member is designed for torsion, torsion reinforcement shall be provided as below:

a) All transverse reinforcement provided for torsion shall be in the form of closed stirrups perpendicular to the axis of the members;

b) The spacing, s_v, of the stirrups shall not exceed $(x_1 + y_1)/4$ or 200 mm, whichever is smaller, where x_1 and y_1 are respectively short and long dimensions of the stirrup;

c) Each end of the bar forming the stirrup shall be anchored in accordance with Part 6 'Structural Design, Section 5 Concrete, Subsection 5A Plain and Reinforced Concrete' of the Code; and

d) Torsional reinforcement shall be continued to a distance not less than $(D + b_w)$ beyond the point at which it is no longer than theoretically required, where D is the overall depth and b_w is the effective width of the web of a flanged member.

23 LIMIT STATE OF SERVICEABILITY

23.1 Limit State of Serviceability: Deflection

23.1.1 *Type 1 and Type 2 Members*

23.1.1.1 *Short-term deflection*

The instantaneous deflection due to design loads may be calculated using elastic analysis based on the uncracked section and the modulus of elasticity of concrete as given in **5.2.3**.

23.1.1.2 *Long-term deflection*

The total long-term deflection due to the prestressing force, dead load and any sustained imposed load may be calculated using elastic analysis, taking into account the effects of cracking and of creep and shrinkage (*see* **5.2.4** and **5.2.5**) Due allowance shall be made for the loss of prestress (*see* **18.5.2**) after the period considered. The deflections should comply with the limits given in **19.3.1**.

23.1.2 *Type 3 Members*

Where the permanent load is less than or equal to 25 percent of the design imposed load, the deflection may be calculated as in **23.1.1.1**. When the permanent load is more than 25 percent of the design imposed load, the vertical deflection limits for beams and slabs may generally be assumed to be satisfied provided that the span to effective depth ratios are not greater than the values obtained as below:

a) Basic values of span to effective depth ratios for spans up to 10 m:

Cantilever	:	7
Simply supported	:	20
Continuous	:	26

b) For spans above 10 m, the values in (a) may be multiplied by 10/(span in metres), except for cantilever in which case deflection calculations should be made.

23.2 Limit State of Serviceability: Cracking

In members made up of precast units, no tension shall be allowed at any stage at mortar or concrete joints. For a member which is free of joints, the tensile stress shall not exceed the values specified below for the 3 types of members:

a) *Type 1* — No tensile stress.

b) *Type 2* — The tensile stress shall not exceed 3 N/mm^2. However, where part of the service loads is temporary in nature, this value may be exceeded by 1.5 N/mm^2, provided under the permanent component of the service load the stress remains compressive.

c) *Type 3* — For Type 3 members in which cracking is permitted, it may be assumed that the concrete section is uncracked, and that hypothetical tensile stresses exist at the maximum size of cracks. The hypothetical tensile stresses for use in these calculations for members with either pre-tensioned or post-tensioned tendons are given in Table 10, modified by coefficients given in Fig. 6.

23.3 Limit State of Serviceability: Maximum Compression

23.3.1 *Maximum Stress Under Service Conditions*

Table 10 Hypothetical Flexural Tensile Stresses for Type 3 Members

[(*Clause* 23.2(c)]

Sl No.	Type of Tendons	Limiting Crack Width mm	Stress of Concrete for Grade				
			M 30	M 35	M 40	M 45	M 50 and above
(1)	(2)	(3)	(4)	(5)	(6)	(7)	(8)
i)	Pre-tensioned tendons	0.1	—	—	4.1	4.4	4.8
		0.2	—	—	5.0	5.4	5.8
ii)	Grouted post-tensioned tendons	0.1	3.2	3.6	4.1	4.4	4.8
		0.2	3.8	4.4	5.0	5.4	5.8
iii)	Pre-tensioned tendons distributed in the tensile zone and positioned close to the tension faces of concrete.	0.1	—	—	5.3	5.8	6.3
		0.2	—	—	6.3	6.8	7.3

NOTE — When additional reinforcement is distributed within the tension zone and positioned close to the tension face of concrete, the hypothetical tensile stresses may be increased by an amount which is proportional to the cross sectional areas of the additional reinforcement expressed as a percentage of the cross sectional area of the concrete. For 1 percent of additional reinforcement, the stress may be increased by 4 N/mm² for members with pre-tensioned and grouted post-tensioned tendons and by 3 N/mm² for other members. For other percentages of additional reinforcement the stresses may be increased in proportion excepting that the total hypothetical tensile stress shall not exceed 0.25 times the characteristic compressive strength of concrete.

23.3.1.1 *Compressive stress in flexure*

The maximum permissible compressive stress, prestress and service loads after deduction of the full losses in the specified prestress shall be determined by a straight line relation as in Fig. 7; but different stress limits shall apply to the concrete of the structure depending on whether it falls in a part of the section where the compressive stresses are not likely to increase in service (Zone I) or in part of the section where the compressive stresses are likely to increase in service (Zone II) (*see* Fig. 7).

For Zone I, the straight line relation of permissible stress shall be determined by the straight line joining a point given by a permissible stress of 0.41 f_{ck} for concrete of Grade M 30 to another point given by a permissible stress of 0.35 f_{ck} for concrete of Grade M 60.

For Zone II, the determining points of the graph shall be reduced to 0.34 f_{ck} and 0.27 f_{ck}, respectively.

23.3.1.2 *Stress in direct compression*

Except in the parts immediately behind the anchorage, the maximum stress in direct compression shall be limited to 0.8 times the permissible stress obtained from **23.3.1.1**.

23.3.2 *Maximum Stress at Transfer*

23.3.2.1 *Compressive stress in flexure*

The maximum permissible compressive stress due to bending and direct force at the time of transfer of prestress shall be determined from a graph in which a straight line joins a point given by 0.54 f_{ci} for a concrete of Grade M 30 to a second point giving a permissible stress of 0.37 f_{ci} for concrete of Grade M 60 (*see* Fig. 8A); f_{ci} being cube strength of concrete at transfer which in no case shall be less than half the corresponding characteristic compressive strength of concrete. These values apply to post-tensioned work; for pre-tensioned work the variation represented by Fig. 8B will apply.

NOTE — The strength of concrete at the time of transfer f_{ci} shall be established by tests carried out on cubes at the age of the concrete at transfer for such other major structures and in other cases, if more convenient, from the straight line graph, joining the characteristic compressive strength of concrete and cube strength at 7 days. The transfer of prestress shall be made only after the concrete has attained a strength of at least half the characteristic compressive strength of concrete.

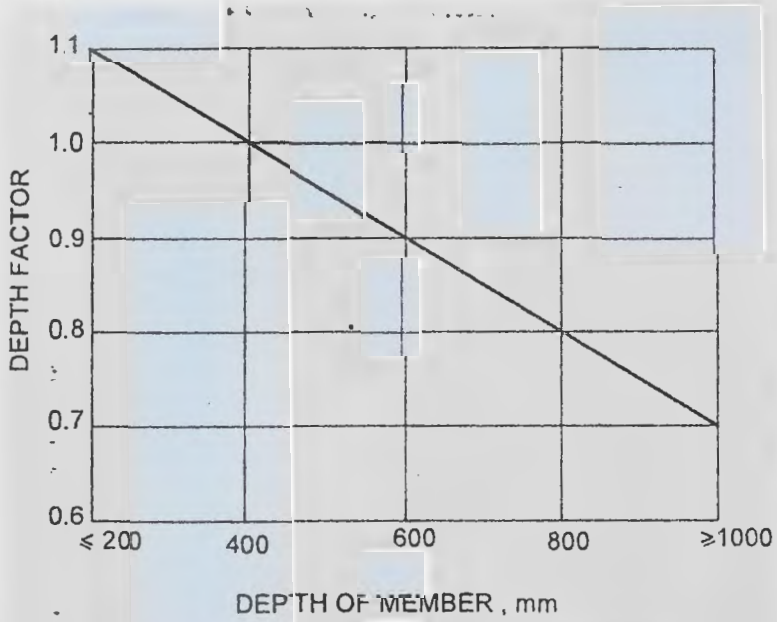

FIG. 6 DEPTH FACTORS FOR TENSILE STRESSES FOR TYPE 3 MEMBERS

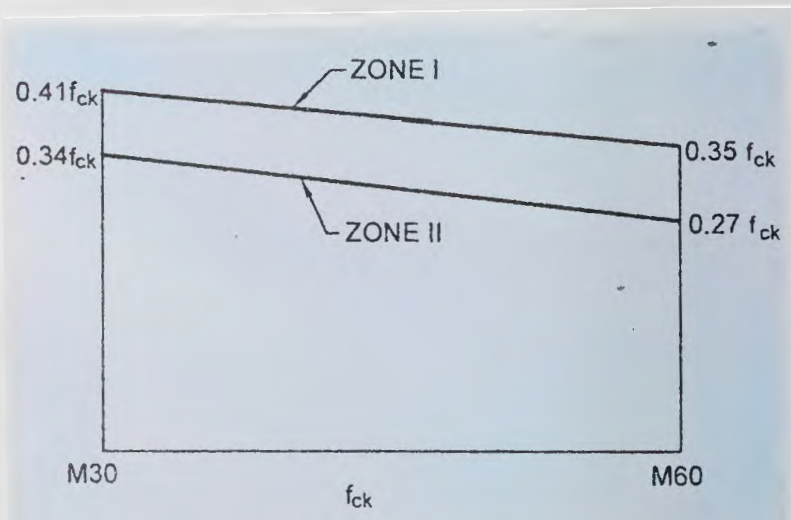

FIG. 7 COMPUTATION OF MAXIMUM PERMISSIBLE COMPRESSIVE STRESS IN FLEXURE DUE TO FINAL PRESTRESS

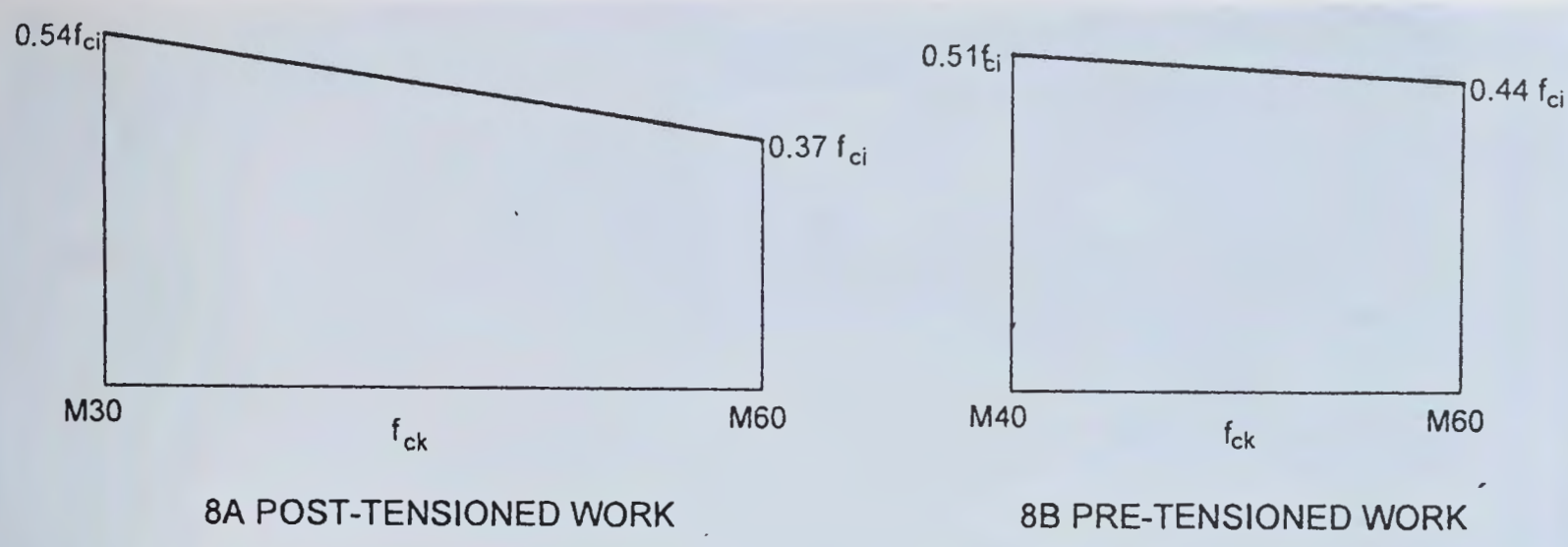

FIG. 8 COMPUTATION OF MAXIMUM PERMISSIBLE COMPRESSIVE STRESS IN FLEXURE AT TRANSFER

23.3.2.2 *Stress in direct compression*

Except in the parts immediately behind the anchorages, the maximum stress in direct compression shall be limited to 0.8 times the permissible stress obtained from **23.3.2.1**.

ANNEX A

(*Clause* 11.2)

SHEATHING DUCTS FOR PRESTRESSING

A-1 MILD STEEL SHEATHING DUCTS

Unless otherwise specified, the material shall be cold rolled cold annealed (CRCA) mild steel intended for mechanical treatment and surface refining but not for quench hardening or tempering.

The material shall be clean and free from rust and normally of bright metal finish. However, in case of use in aggressive environment galvanized or lead coated mild steel strips shall be adopted.

The thickness of metal sheathing shall not be less than 0.3 mm, 0.4 mm and 0.5 mm for sheathing ducts having internal diameter up to 50 mm, 75 mm and 90 mm, respectively. For bigger diameter of ducts, thickness of sheathing shall be based on recommendations of prestressing system supplier.

The sheathing shall conform to the requirements specified in **A-3** and a test certificate shall be furnished by the manufacturer.

The joints of all sheathing shall be water tight and conform to the provisions specified in **A-5**.

A-2 CORRUGATED HDPE SHEATHING DUCTS

Unless otherwise specified, the material for the ducts shall be high-density polyethylene with more than 2 percent carbon black to provide resistance to ultraviolet degradation and shall have the following properties:

Specific density	: 0.954 g/cm^3 at 23 °C
Yield stress	: 18.0 N/mm^2
Tensile strength	: 21.0 N/mm^2
Shore hardness *D*:	
a) 3 s	: 60
b) 15 s	: 58
Notch impact strength at:	
a) 23°C	: 10 kJ/m^2
b) 40°C	: 4 kJ/m^2
Coefficient of thermal expansion for 20°C – 80°C	: 1.50×10^{-4} /°C

The thickness of the wall shall be 2.3 ± 0.3 mm as manufactured and 1.5 mm after loss in the compression test, for duct size up to 160 mm outer diameter.

The ducts shall be corrugated on both sides. The ducts

shall transmit full tendon strength from the tendon to the surrounding concrete over a length not greater than 40 duct diameters.

These ducts shall be joined by adopting any one or more of the following methods, as convenient to suit the individual requirements of the location, subject to the satisfactory pressure tests, before adoption:

a) Screwing together with male and female threads.

b) Joining with thick walled HDPE shrink couplers with glue. This can also be used for connection with trumpet, etc.

c) Welding with electro fusion couplers.

The joints shall be able to withstand an internal pressure of 0.5 kg/cm^2 for 5 min as per test procedure given in **A-3**.

A-3 TESTS ON SHEATHING DUCTS

a) All tests specified below shall be carried out on the same sample in the order given below.

b) At least 3 samples for one lot of supply (not exceeding 7 000 m length) shall be tested.

A-3.1 Workability Test

A test sample 1 100 mm long is soldered to a fixed base plate with a soft solder (*see* Fig. 9). The sample is then bent to a radius of 1 800 mm alternately on either

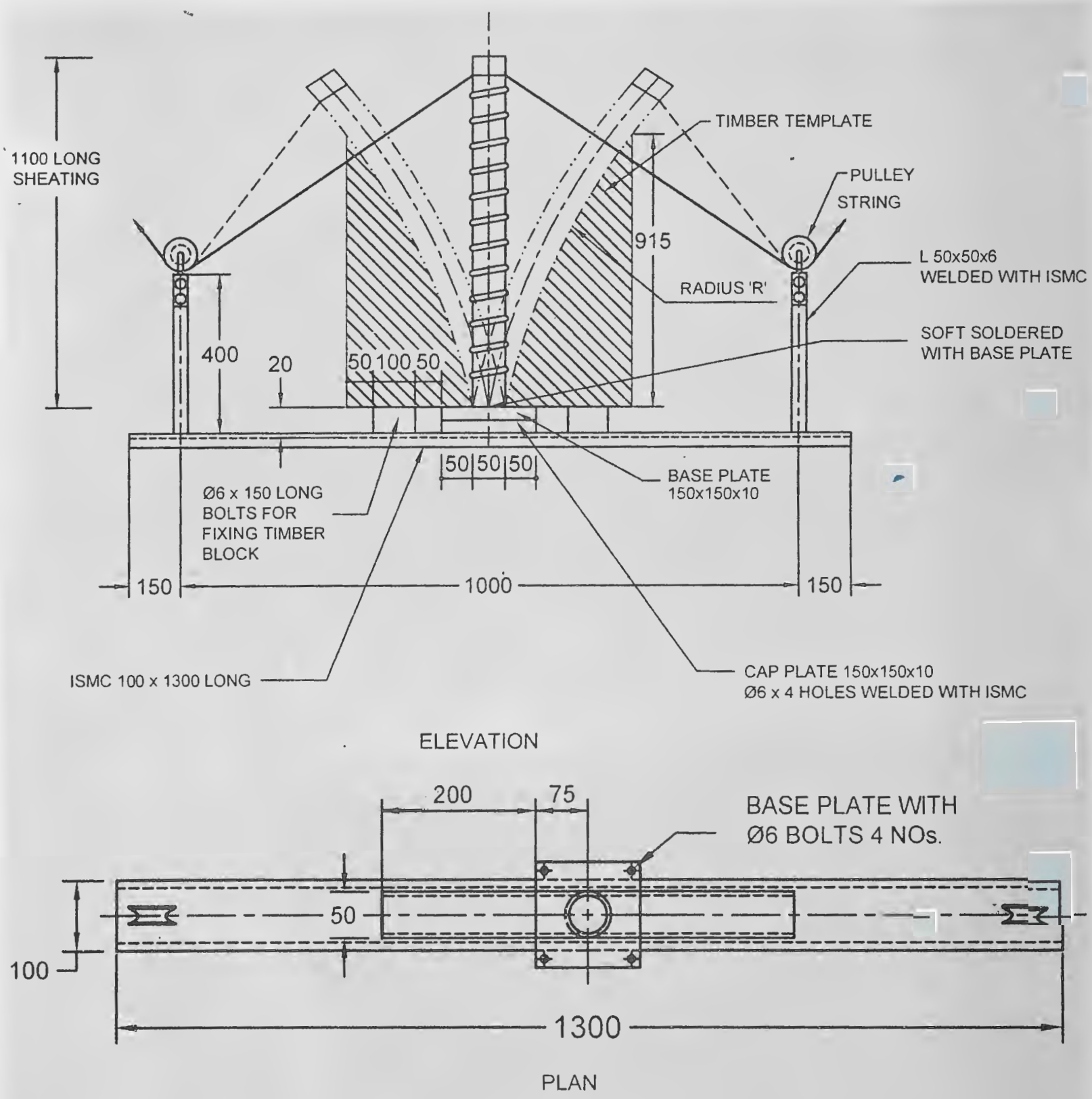

All dimensions in millimetres

FIG. 9 WORKABILITY TE.

side to complete 3 cycles. Thereafter, the sealing joints will be visually inspected to verify that no failure or opening has taken place.

A-3.2 Transverse Load Rating Test

The test ensures that stiffness of the sheathing is sufficient to prevent permanent distortion during site handling.

The sample is placed on a horizontal support 500 mm long so that the sample is supported at all points of outward corrugations.

A load as specified in the table below is applied gradually at the centre of the supported portion through a circular contact surface of 12 mm diameter:

Diameter of Sheathing mm	*Load* N
More than 25 up to 35	250
more than 35 up to 45	400
more than 45 up to 55	500
more than 55 up to 65	600
more than 65 up to 75	700
more than 75 up to 85	800
more than 85 up to 90	1 000

Couplers shall be placed so that the load is applied approximately at the centre of two corrugations (*see* Fig. 10). The load as specified below is applied in increments.

The sample is considered acceptable, if the permanent deformation is less than 5 percent.

A-3.3 Tension Load Test

The test specimen is subjected to a tensile load. The hollow core is filled with a wooden circular piece having a diameter of 95 percent of the inner diameter of the sample to ensure circular profile during test loading (*see* Fig. 11).

A coupler is screwed on and the sample loaded in increments, till specified load. If no deformation of the joints nor slippage of couplers is noticed, the test shall be considered satisfactory:

Diameter of Sheathing mm	*Load* N
more than 25 up to 35	300
more than 35 up to 45	500
more than 45 up to 55	800
more than 55 up to 65	1 100
more than 65 up to 75	1 400
more than 75 up to 85	1 600
more than 85 up to 90	1 800

A-3.4 Water Loss Test

The sample is sealed at one end. The sample is filled with water and after sealing, the end is connected to a system capable of applying a pressure of 0.05 MPa (*see* Fig. 12) and kept constant for 5 min; hand pump and pressure gauge or stand pipe system can be used.

The sample is accepted if the water loss does not exceed 1.5 percent of the volume. The volume is worked out as follows:

Another sample 500 mm long is sealed at one end and the volume of hollow space arrived at by pouring water from a measuring cylinder.

The computation of relative profile volume is worked out as follows:

$$\text{Relative profile volume} = \frac{V_p - \frac{\pi\phi^2 l}{4}}{\pi\phi l} \text{ cm}^3/\text{cm}^2$$

where

V_p = actual volume = $V_a - V_b$;

V_a = premeasured quantity of water in a measuring cylinder;

V_b = balance quantity of water left in the cylinder after completely filling of the test sample;

l = length of specimen; and

ϕ = internal diameter of sheathing.

A-4 TESTS ON CORRUGATED HDPE SHEATHING DUCTS

The additional acceptance tests for the prestressing systems employing corrugated HDPE ducts shall cover the following two tests.

A-4.1 Bond Test

A-4.1.1 The test is carried out to establish satisfactory bond characteristics between the tendon and concrete, in the ultimate condition. The test requires the following equipment:

a) Three similarly reinforced concrete beams with a HDPE duct of length equal to 40 times the duct diameter,

b) Prestressing tendon of adequate length for stressing and for embedding in the beam,

c) Tendon anchorage system,

d) Load cells and meters, and

e) Grout constituents.

A-4.1.2 *Method*

Cast an adequately reinforced beam to withstand the prestressing operation and of length to embed 40 times the diameter of duct to suit the tendon to be adopted. Introduce the strands of the tendon by spacing them parallel by means of ply-spacers as shown in Fig. 13

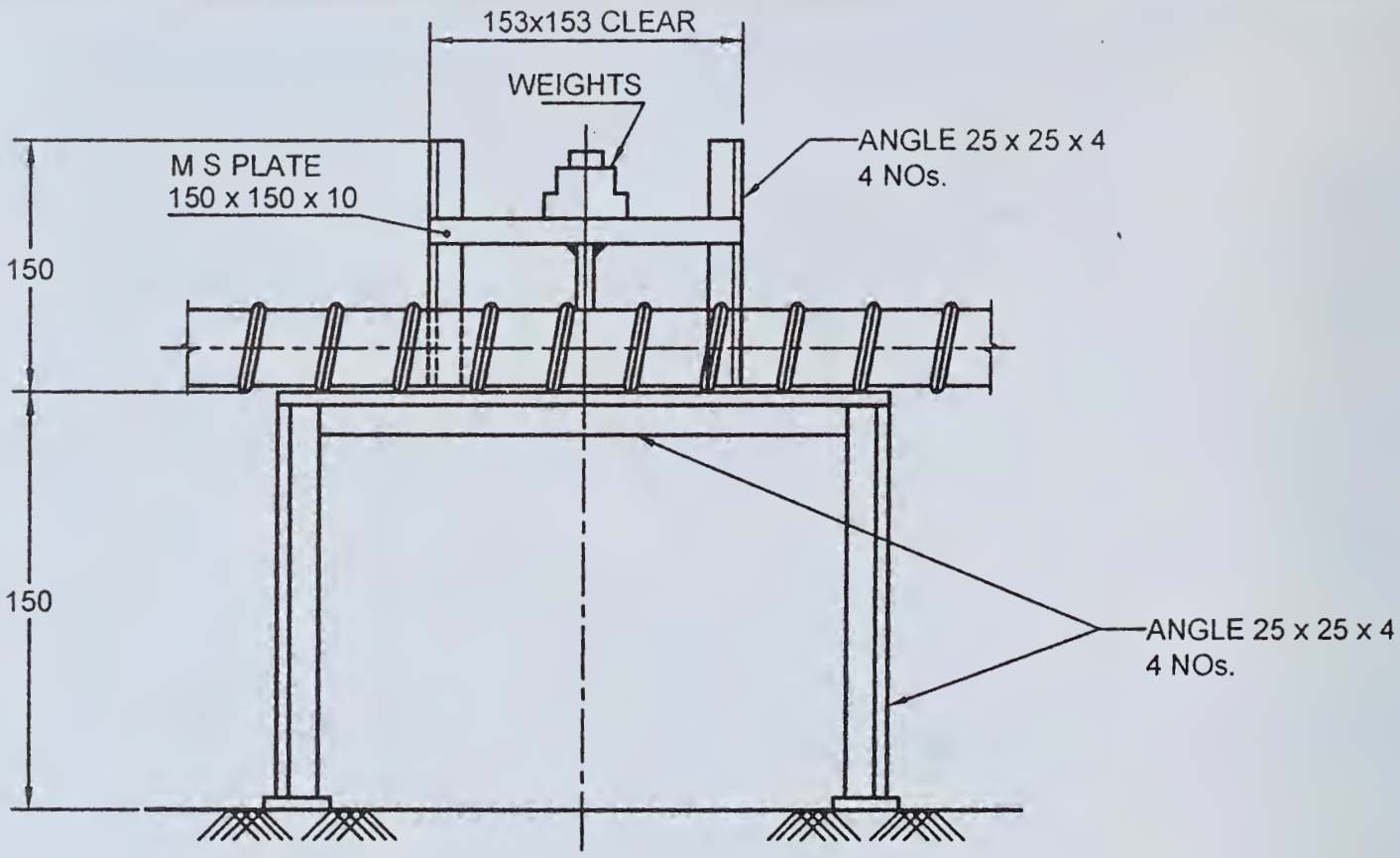

ELEVATION

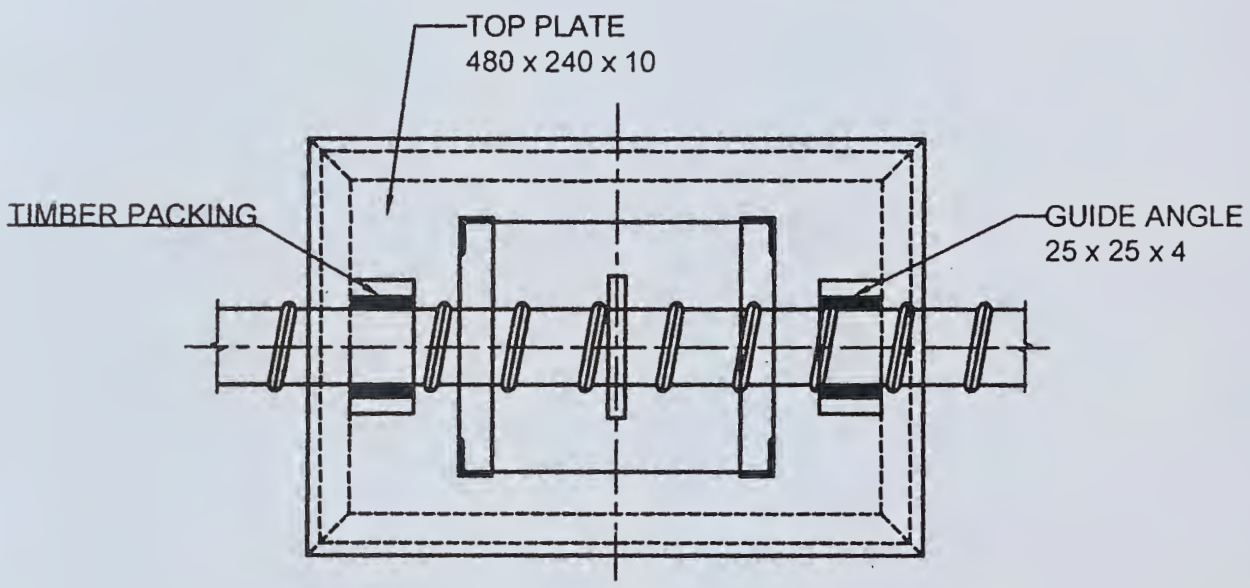

PLAN

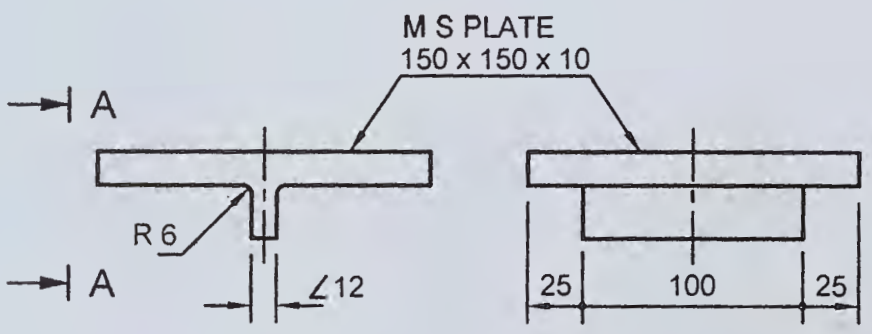

VIEW A-A

All dimensions in millimetres.

FIG. 10 TRANSVERSE LOAD RATING TEST

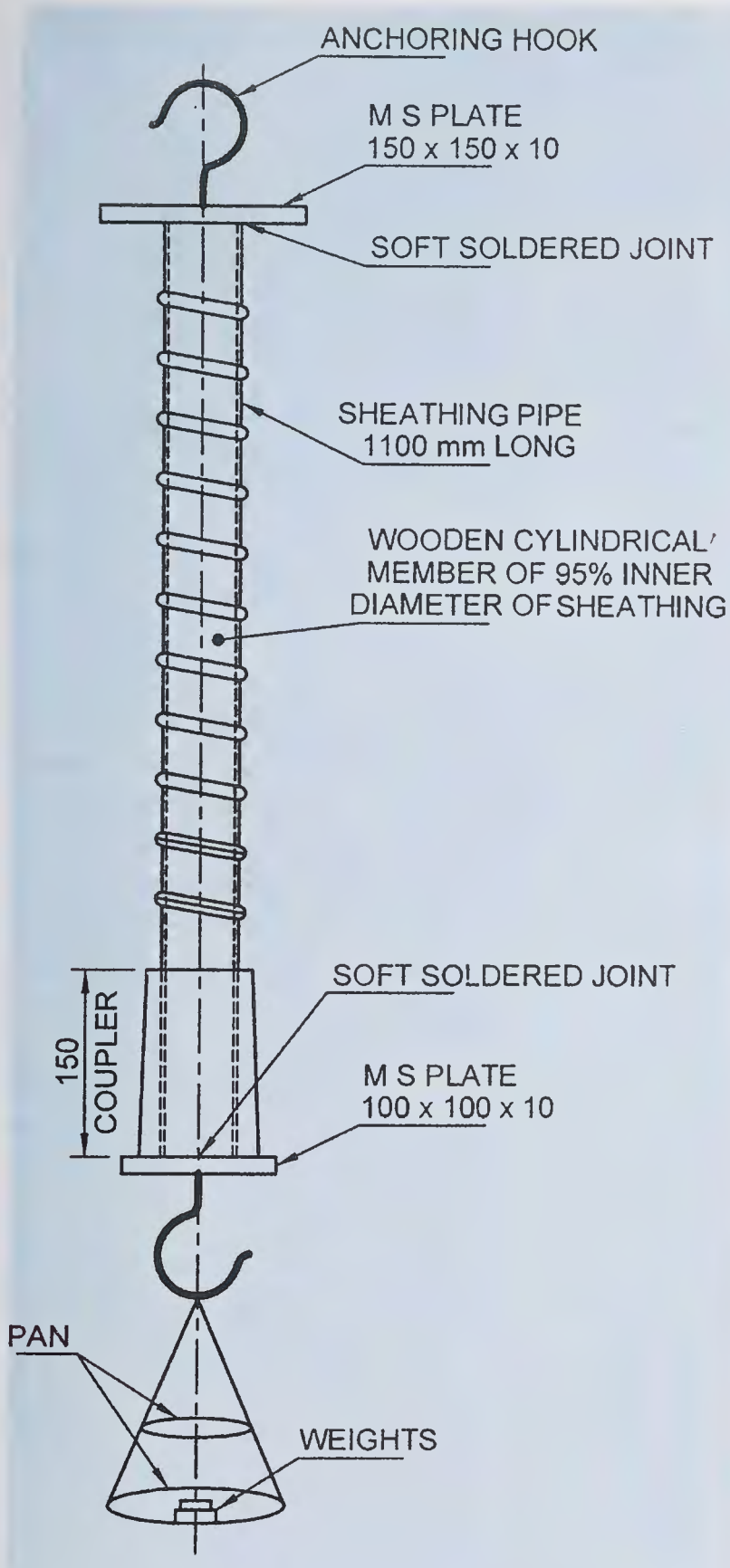

All dimensions in millimetres.

FIG. 11 TENSION LOAD TEST

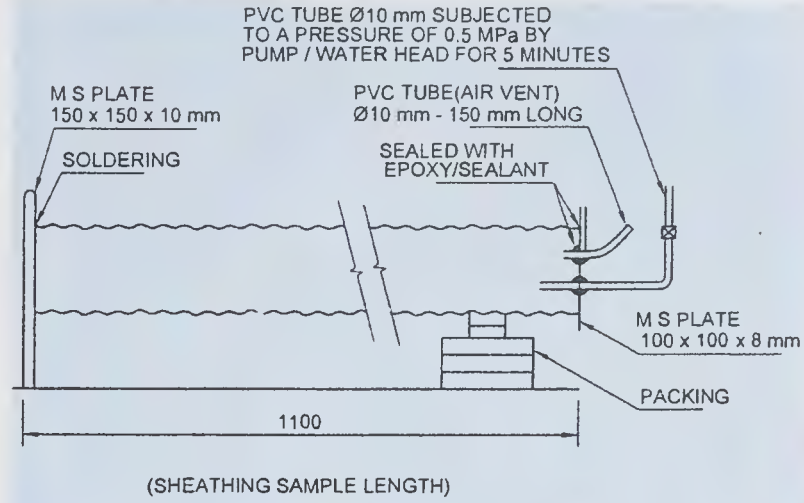

FIG. 12 TEST FOR WATER LOSS STUDY

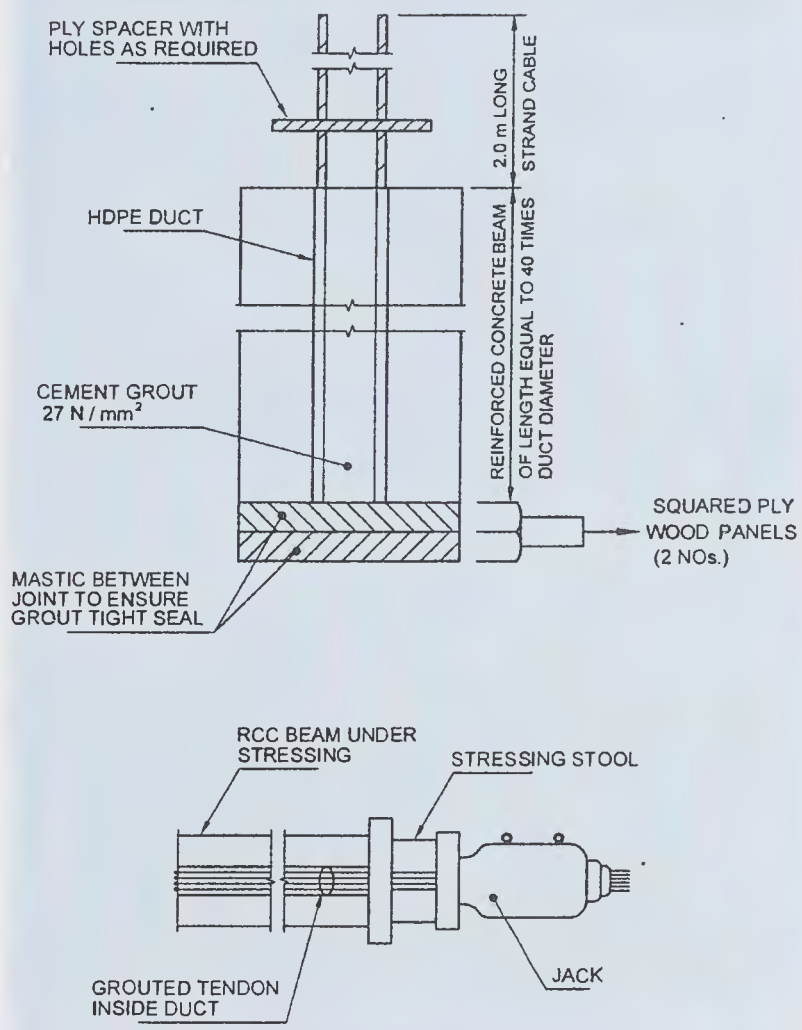

FIG. 13 BOND TEST ARRANGEMENT

and fill the duct with grout of strength not less than 27 N/mm^2. When the grout has attained the necessary strength, stress the tendon slowly increasing the load to the failure capacity. The failure capacity of the bond shall be at least equal to the anchorage efficiency or 0.95 of failure capacity of the tendon. At least 3 tests shall be carried out to ascertain the adequacy of the duct.

A-4.2 Compression Test for the Loss of Wall Thickness

A-4.2.1 The test is carried out to establish the wear and tear of the sheathing material and the rigidity of the duct surface against indentation and abrasion under concentrated line loading from the tendon constituents. The test requires the following equipment:

a) Three concrete blocks,
b) One 1 000 mm long strand forming the tendon,
c) A 3 MN press,
d) A loading beam of 300 mm length to transmit 5 kN load,
e) A rubber pad for placing between the press and the beam for uniform and constant load transfer,
f) A bearing plate with a mono strand jack to pull the strand under loaded condition, and
g) A digital caliper.

A-4.2.2 *Method*

Cast three concrete cubes of 300 mm size, of the same strength as a main structure, with half cut HDPE sheathing ducts embedded in it at the top as shown in Fig. 14. Care shall be exercised to ensure that the duct surface has uniform contact with concrete all around. Place the concrete block over the press with a 1 000 mm length of strand forming the tendon placed in the duct and apply the 5 kN uniform load gradually as shown. Pull the strand under the stressed condition by 200 mm across the duct. Repeat the test on all the 3 ducts so embedded. Measure the indentations formed in all the 3 ducts along the length of the strand, by means of digital caliper. The residual thickness of the duct shall not be less than 1.5 mm.

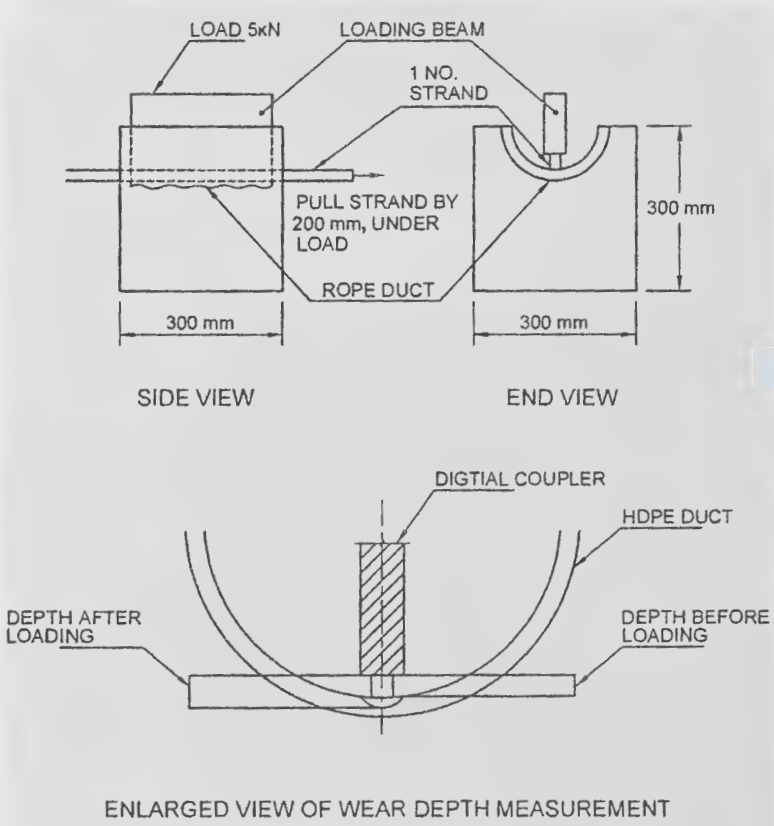

FIG. 14 COMPRESSION TEST ARRANGEMENT

A-5 SPECIFICATION FOR SHEATHING DUCT JOINTS

The sheathing ducts shall be of the spiral corrugated type. For major projects, the sheathing ducts should preferably be manufactured at the project site utilizing appropriate machines. With such an arrangement, long lengths of sheathing ducts may be used with consequent reduction in the number of joints and couplers.

Where sheathing duct joints are unavoidable, such joints shall be made cement slurry tight by the use of corrugated threaded sleeve couplers which can be tightly screwed on to the outer side of the sheathing ducts. A heat-shrink coupler could also be used if suitable.

Typical details of a sleeve coupler is shown in Fig. 15. The length of the coupler should not be less than 150 mm but should be increased upto 200 mm, wherever practicable. The joints between the ends of the coupler and the duct shall be sealed with adhesive sealing tape to prevent penetration of cement slurry during concreting. The couplers of adjacent ducts should be staggered wherever practicable. As far as possible, couplers should not be located in curved zones. The corrugated sleeve couplers are being conveniently manufactured using the sheath making machine with the next higher size of die set.

The heat-shrink coupler (*see* Fig. 16) is supplied in the form of bandage rolls which can be used for all diameters of sheathing ducts. The bandage is coated on the underside with a heat sensitive adhesive so that after heating the bandage material shrinks on to the sheathing duct and ensures formation of a leak proof joint, without the need for extra taping or support in the form of corrugated sleeve couplers. The heating is effected by means of a soft gas flame.

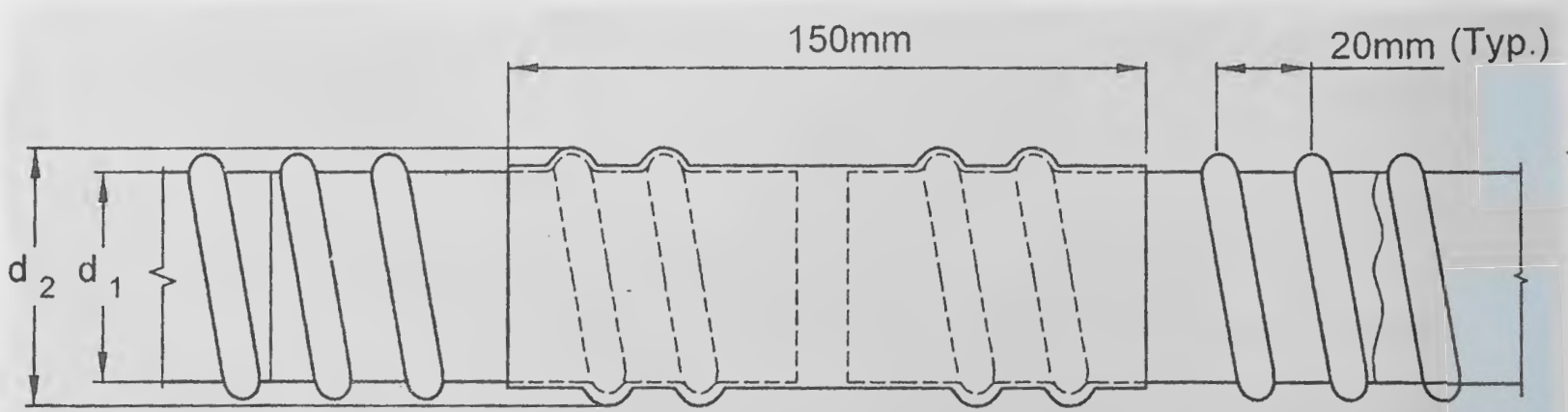

FIG. 15 TYPICAL DETAILS OF A SLEEVE COUPLER

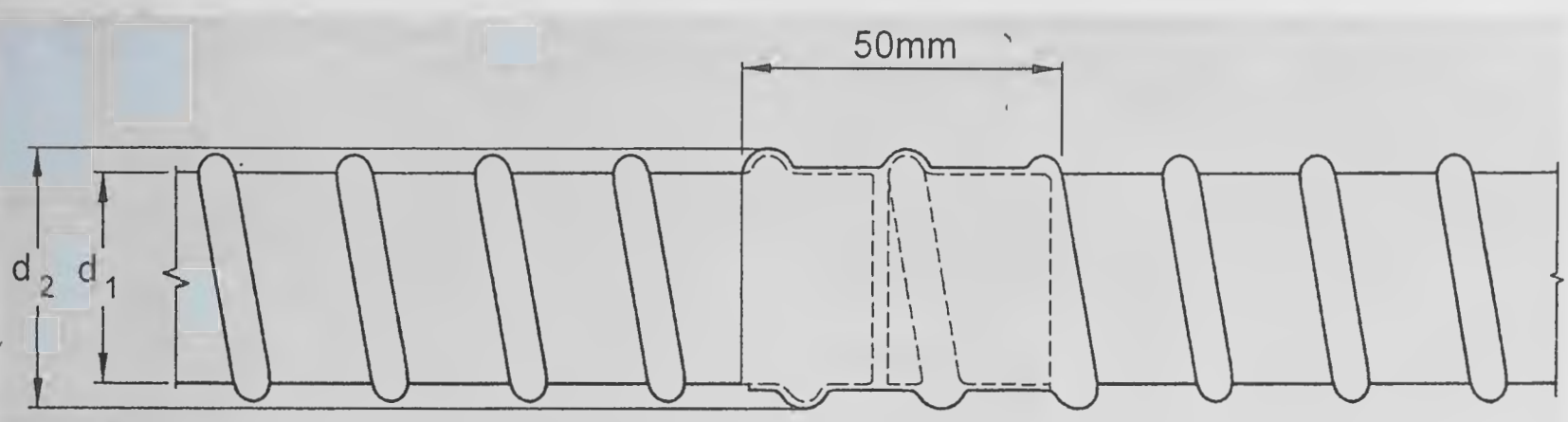

FIG. 16 TYPICAL DETAILS OF HEAT-SHRINK COUPLERE

ANNEX B

(*Clause* 12.1.4.4)

TESTING OF SYSTEMS WITH MECHANICAL ANCHORAGES

B-1 STATIC LOAD TEST WITH TENDON-ANCHORAGE ASSEMBLY

The aim of the test is to assess the performance of the tendon-anchorage assembly and to determine any decrease of the breaking load of the prestressing steel due to the influence of the anchorage. The test is also relevant for couplings.

B-1.1 Test Specimen

The tendon and anchorage to be tested should be assembled according to the envisaged application, using all the components necessary for anchoring the tendon. The geometrical configuration of the individual wires, strands or bars in the specimen should be identical to that of the actual tendon-anchorage assembly and so the following properties should be established:

a) Main geometrical and mechanical properties of the prestressing steel used in the test;
b) Actual mean breaking load;
c) Mean total elongation at maximum load;
d) Mean cross-section;
e) Surface characteristics, etc; and
f) Minimum of 3 single unit tensile tests.

Relevant geometrical and mechanical properties of anchorage components should also be determined. The free length of the individual wires, strands or bars in the specimen to be tested should be not less than 3.0 m.

If one grade of prestressing steel of the same type is to be used with the same type of anchorage, the tests should be performed using the grade with the highest characteristic tensile strength.

B-1.2 Test Procedure

The tendon specimen is mounted in a calibrated test rig or testing machine and should be stressed in increments of force corresponding to 20 percent, 40 percent, 60 percent and 80 percent of the characteristic tensile strength of the prestressing steel, f_p. In each increment the force is increased at a constant force rate corresponding to about 100 MPa per min. At the 80 percent level, the force is held constant for 1 h. Subsequently, the force is increased gradually to total failure.

The described test procedure is normally applicable to systems where the prestressing steel is connected to the anchorage before applying the stressing force. In systems where the prestressing level is locked in the anchorage after the stressing force has been applied, the above test procedure should be adapted as follows:

a) The tendon should be mounted in the test rig or testing machine, using an identical geometrical configuration of the individual wires, strands or bars in the specimen to that in the actual tendon-anchorage assembly.
b) The tendon should be stressed at one end with the equipment used on the construction site in steps as described to 80 percent of the characteristic tensile strength of prestressing steel, f_p.

c) After the tendon has been locked at this force, the further testing procedure should be as previously described.

The test can be carried out in the manner described in the first instance if it can be proved that locking the prestressing steel in anchorage after the stressing force has been applied has no significant influence on the behaviour of the tendon-anchorage assembly.

B-1.3 Measurements and Observations

The following measurements and observations should be made and recorded:

a) Relative force and time dependent displacement Δa of the prestressing steel with respect to the anchorage (*see* Fig. 17),
b) Relative force and time dependent displacement Δb between the individual components of the anchorage (*see* Fig. 17),
c) Deformation of the anchorage components,
d) Elongation of the tendon on free length up to failure,
e) Measured ultimate force F_{Tu}, and
f) Location and mode of failure.

B-1.4 Test Requirements

The test result should meet the following requirements:

a) Residual deformations of anchorage components after the test should confirm the reliability of the anchorage.
b) The increase in the displacements between the anchorage components as well as between the prestressing steel and anchorage components should not be disproportionate to the increase in tendon force.
c) The above relative displacements during the $0.8 f_{pk}$ load stage should stabilize within the first 30 min of the load duration of 1 h.
d) The mode of failure of tendon should be by the fracture of the prestressing steel. Failure of the tendon should not be induced by the failure of anchorage components.
e) The measured anchorage efficiency is:

$$\eta_A = \frac{F_{Tu}}{F_{pm}} \geq 0.95$$

where

F_{pm} = actual mean breaking load.

The total elongation in free length of the tendon under the load F_{Tu} should be not less than 2 percent.

B-2 DYNAMIC LOAD TEST WITH TENDON-ANCHORAGE ASSEMBLY

The aim of the test is to determine the capacity of the tendon-anchorage assembly under load fluctuations as an indication of the reliability and durability of the assembly.

B-2.1 Test Specimen

The type of specimen should correspond to the requirements of section **B-1.1**. If one grade of prestressing steel of the same type is to be used with the same type of anchorage, the tests should be performed with prestressing steel using the grade with the highest characteristic tensile strength.

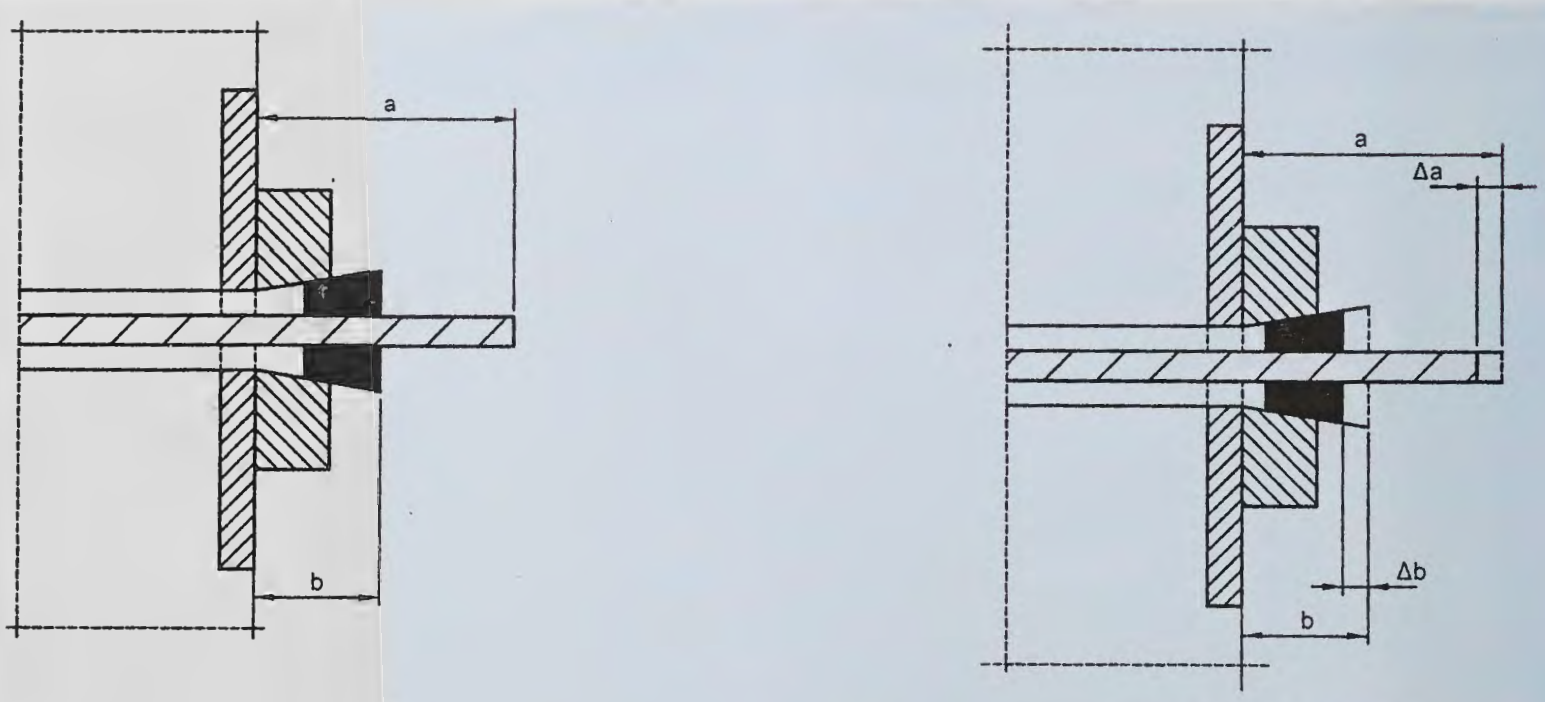

FIG. 17 DISPLACEMENTS DURING TESTING

Where the capacity of the testing machine to be used could be exceeded, the number of wires, strands or bars in the tendon-anchorage assembly to be tested may be reduced, provided that the prestressing steel units with the most severe angular deviation of tendon axis from the prescribed are included and that the test results are representative for the complete tendon.

B-2.2 Test Procedure

The test should be performed in a tensile testing machine with a pulsator at a constant force frequency of not more than 500 load cycles per min, and with a constant upper force of 65 percent of the characteristic strength of the prestressing steel. The range of forces, $\Delta f = F_{max} - F_{min}$ should be maintained at a constant level throughout testing.

The specimen should be tested in such a way that secondary oscillations are precluded. When assembling the specimen and fitting it in the testing machine, special care should be taken to ensure that the force is evenly distributed to all the tensile elements of the tendon. In the case of grouted tendons special devices may be used to avoid premature fretting failure of the prestressing steel remote from the anchorage.

B-2.3 Measurements and Observations

The following measurements and observations should be made and recorded:

a) Relative displacement between prestressing steel and individual anchorage components as well as between the anchorage components themselves, depending on load and on number of load cycles (*see* Fig. 17).

b) Examination of anchorage components and prestressing steel after test with respect to fatigue damage and deformation.

B-2.4 Steel Requirements

Each test result should meet the following requirements:

a) Fatigue failure of anchorage components should not occur.

b) The minimum fatigue strength of a post-tensioning system should be $\Delta\sigma_{p\,Min} = 80$ MPa.

The fatigue strength is defined as the stress range $\Delta\sigma_p$ which is endured for 2 million cycles without failure of 5 percent of the initial cross-section of the tested tendon at beginning of the test.

B-3 LOAD TRANSFER TEST

With the load transfer test, the transfer of the prestressing force from the mechanical anchorage and its components to the concrete should be verified.

B-3.1 Test Specimen

The test specimen is schematically depicted in Fig. 18. The specimen should contain those anchorage components which will also be embedded in the structural concrete. Their arrangement should comply with the practical application and with the prestressing contractor's specification.

The test specimen should be a concrete prism tested in axial compression.

The part of the specimen containing the anchorage should be provided with bursting reinforcement of the same size and configuration as specified for the particular system and tendon, respectively. Reinforcement may be used for the assembly of the bursting reinforcement. It should not be considered part of the technical approval, if the following conditions are not complied with:

a) Longitudinal bars have a total cross-section more than 200 mm².

b) Stirrups, that is, the secondary reinforcement, uniformly distributed along the height of specimen, should constitute more than 0.05 t steel per cubic metre of concrete.

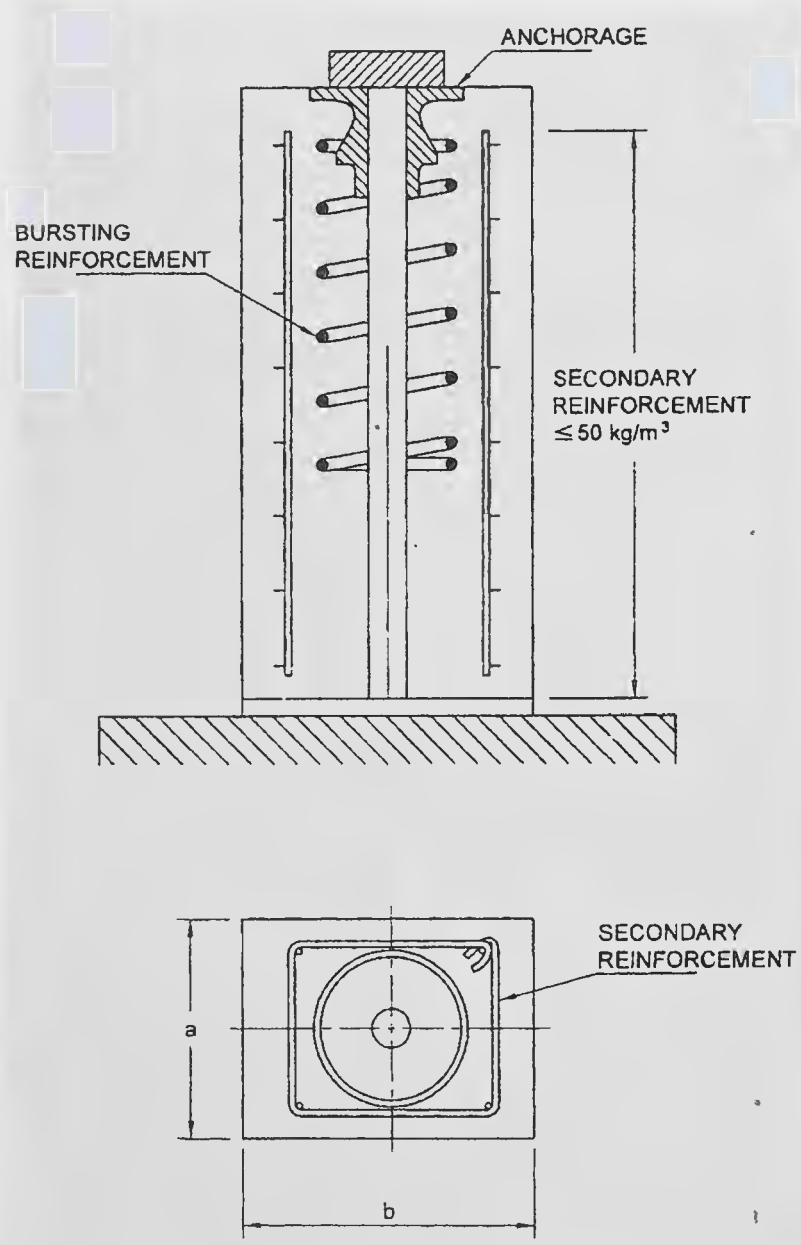

FIG. 18 TEST SPECIMEN FOR LOAD TRANSFER TEST

The concrete of the test specimen should correspond to the actual concrete used for prestressed concrete structures with respect to materials, composition, compaction and its characteristic strength f_{ck}. After casting, the specimen should be demoulded after one day and then moist-cured until testing. The cubes cast for the determination of compressive strength should be treated similarly.

B-3.2 Test Procedure

The specimen should be mounted in a calibrated test rig or testing machine. The load should be applied corresponding to actual loading conditions in the structure either by loading the tendon or by applying the force directly to the anchorage. The force is increased in increments of 20 percent from 0 percent up to 80 percent of the characteristic strength of the prestressing steel, f_p (*see* Fig. 19).

After reaching the load 0.8 f_p at least ten slow load cycles should be performed, with at least 0.8 f_p and 0.12 f_p being the upper and lower load limits, respectively. The necessary number of load cycles depends upon the stabilization of strain readings and crack widths as described below. Following cyclic loading, the specimen should be loaded incrementally to failure.

During cyclic loading, measurements should be taken at the upper and lower loads of several cycles in order to decide whether a satisfactory stabilization of strains and crack widths is being attained. Cyclic loading should be continued until stabilization is satisfactory (*see* **B-3.4**). Figure 19 shows the sequence of loading and measurements.

At the final test to failure the mean compressive strength ($f_{cm.e}$) of concrete of specimen should be:

$$f_{cm.e} \leq f_{ck.o} \text{ and } f_{cm.e} \leq 0.85 f_{ck}$$

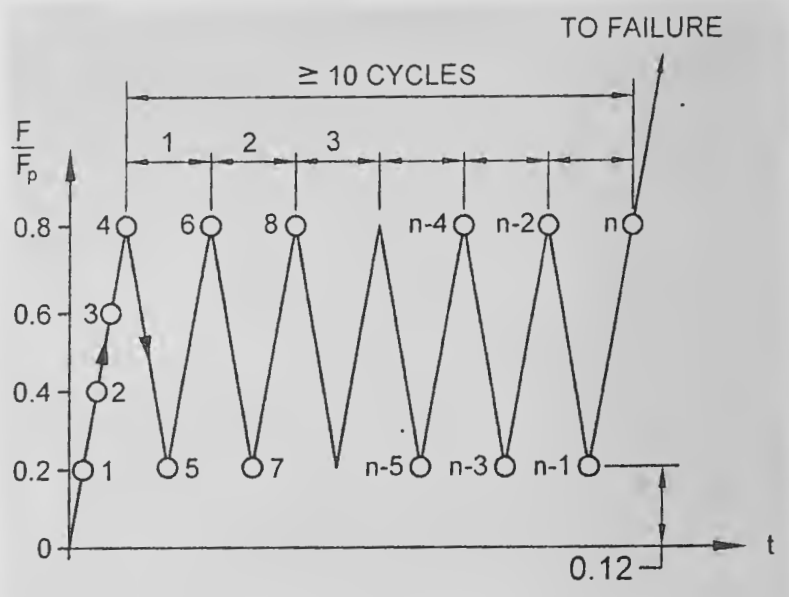

FIG. 19 PROCEDURE FOR THE LOAD TRANSFER TEST

B-3.3 Measurements and Observations

The following measurements and observations should be taken and recorded:

a) Longitudinal and transverse concrete strains on the side faces of the specimen in the region of maximum bursting effect under the upper and lower load at different times for increasing numbers of load cycles.

b) Formation, width and propagation of cracks on the side faces of the specimen, as mentioned above.

c) Visual inspection and/or measurement of deformation of anchorage components in contact with the concrete.

d) Location and mode of failure.

B-3.4 Requirements

Each specimen should meet the following requirements (*see* Fig. 20):

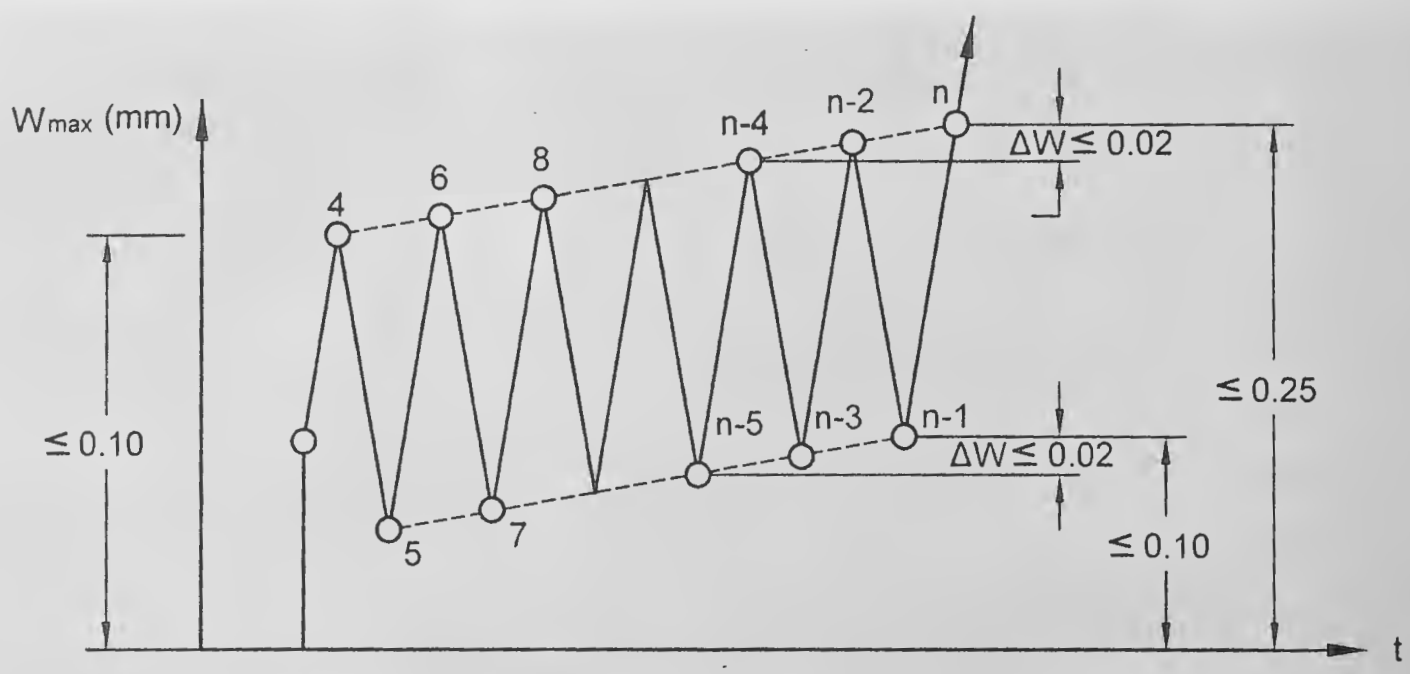

FIG. 20 REQUIREMENTS FOR CRACK WIDTHS

a) Crack width upon first attainment of upper force 0.8 (load point 4) should be ≤ 0.10 mm.

b) Crack width upon last attainment of lower force 0.12 (load point n-1) should be ≤ 0.10 mm.

c) Crack width upon final attainment of upper force 0.8 (load point n) should be ≤ 0.25 mm.

d) Readings of longitudinal and transverse strains should have stabilized during cyclic loading. The strains can be assumed to have stabilized if the increase of strain in last two load cycles is less than 5 percent.

e) Readings of crack widths should have stabilized during cyclic loading. The crack widths can be assumed to have stabilized if the crack width does not increase by 0.02 mm in the last two load cycles.

f) The measured failure load F_u shall meet each of the following requirements:

$$F_u \geq F_p \frac{f_{cm.e}}{f_{ck.o}} \text{ and } F_u \geq 1.1F_p$$

ANNEX C

(*Clauses* 18.6.2.2 *and* 22.1.2)

MOMENTS OF RESISTANCE FOR RECTANGULAR AND T-SECTIONS

C-1 The moment of resistance of rectangular sections or T-sections in which neutral axis lies within the flange may be obtained as follows:

$$M_u = f_{pb} A_{ps} (d - 0.42x_u)$$

where

M_u = moment of resistance of the section,

f_{pb} = tensile stress in the tendon at failure,

f_{pe} = effective prestress in tendon,

A_{ps} = area of pretensioning tendons in the tension zone,

d = effective depth to the centroid of the steel area, and

x_u = neutral axis depth.

For pre-tensioned members and for post-tensioned members with effective bond between the concrete and tendons, values of f_{pb} and x_u are given in Table 11. It shall be ensured that the effective prestress after all losses is not less than 0.45 f_{pu}, where f_{pu} is the characteristic tensile strength of tendon. Prestressing tendons in the compression zone should be ignored in the strength calculations when using this method.

Table 11 Conditions at the Ultimate Limit State for Rectangular Beams With Pre-Tensioned Tendons or With Post-Tensioned Tendons Having Effective Bond

(*Clause* C-1)

SI No.	$\frac{A_{ps} \cdot f_{pu}}{bd \cdot f_{ck}}$	Stress in Tendon as a Proportion of the Design Strength $\frac{f_{pb}}{0.87 \cdot f_{pu}}$		Ratio of the Depth of Neutral Axis to that of the Centroid of the Tendon in the Tension Zone x_u/d	
		Pre-Tensioning	Post-Tensioning with Effective Bond	Pre-Tensioning	Post-Tensioning with Effective Bond
(1)	(2)	(3)	(4)	(5)	(6)
i)	0.025	1.0	1.0	0.054	0.054
ii)	0.05	1.0	1.0	0.109	0.109
iii)	0.10	1.0	1.0	0.217	0.217
iv)	0.15	1.0	1.0	0.326	0.316
v)	0.20	1.0	0.95	0.435	0.414[1)]
vi)	0.25	1.0	0.90	0.542	0.488[1)]
vii)	0.30	1.0	0.85	0.655	0.558[1)]
viii)	0.40	0.9	0.75	0.783	0.653[1)]

[1)] The neutral axis depth in these cases is too low to provide the necessary elongation for developing 0.87 f_{pu} stress level. Hence, it is essential that the strength provided exceeds the required strength by 15 percent for these cases.

LIST OF STANDARDS

The following list records those standards which are acceptable as 'good practice' and 'accepted standards' in the fulfillment of the requirements of the Code. The latest version of a standard shall be adopted at the time of enforcement of the Code. The standards listed may be used by the Authority for conformance with the requirements of the referred clauses in the Code.

In the following list, the number appearing in the first column within parentheses indicates the number of the reference in this Subsection.

	IS No.	*Title*
(1)	4845 : 1968	Definitions and terminology relating to hydraulic cement
	6461	Glossary of terms relating to cement concrete:
	(Part 1) : 1972	Concrete aggregates
	(Part 2) : 1972	Materials (other than cement and aggregate)
	(Part 3) : 1972	Concrete reinforcement
	(Part 4) : 1972	Types of concrete
	(Part 5) : 1972	Formwork for concrete
	(Part 6) : 1972	Equipment, tools and plant
	(Part 7) : 1973	Mixing, laying, compaction, curing and other construction aspects
	(Part 8) : 1973	Properties of concrete
	(Part 9) : 1972	Structural aspects
	(Part 10) : 1973	Tests and testing apparatus
	(Part 11) : 1973	Prestressed concrete
	(Part 12) : 1973	Miscellaneous
(2)	269 : 2015	Specification for ordinary Portland cement (*sixth revision*)
	8041 : 1990	Specification for rapid hardening Portland cement (*second revision*)
	455 : 2015	Specification for Portland slag cement (*fifth revision*)
	1489	Specification for Portland pozzolana cement:
	(Part 1) : 2015	Fly ash based (*fourth revision*)
	(Part 2) : 2015	Calcined clay based (*fourth revision*)
	8043 : 1991	Specification for hydrophobic Portland cement (*second revision*)
	12600 : 1989	Specification for low heat Portland cement
	12330 : 1988	Specification for sulphate resisting Portland cement
(3)	12600 : 1989	Specification for low heat Portland cement
(4)	6452 : 1989	Specification for high alumina cement for structural use (*first revision*)
(5)	6909 : 1990	Specification for supersulphated cement (*first revision*)
(6)	383 : 2016	Specification for coarse and fine aggregates for concrete (*third revision*)
(7)	1785(Part 1) : 1983	Specification for plain hard drawn steel wire for prestressed concrete: Part 1 Cold drawn stress relieved wire (*second revision*)
	6003 : 2010	Specification for indented wire for prestressed concrete (*second revision*)
	2090 : 1983	Specification for high tensile steel bars used in prestressed concrete (*first revision*)
	6006 : 2014	Specification for uncoated stress relieved strand for prestressed concrete (*second revision*)
	14268 : 1995	Specification for uncoated stress relieved low relaxation seven ply strand for prestressed concrete
(8)	432 (Part 1) : 1982	Specification for mild steel and medium tensile steel bars and hard-drawn steel wire for concrete reinforcement: Part 1 Mild steel and medium tensile steel bars (*third revision*)
	1786 : 2008	Specification for high strength deformed steel bars and wire for concrete reinforcement (*fourth revision*)
	1566 : 1982	Specification for hard-drawn steel wire fabric for concrete reinforcement (*second revision*)
(9)	4082 : 1996	Recommendations on stacking and storage of construction materials and components at site (*second revision*)
(10)	516 : 1959	Method of test for strength of concrete
	5816 : 1999	Method of test for splitting tensile strength of concrete (*first revision*)
(11)	1489 (Part 1) : 2015	Specification for Portland pozzolana cement: Part 1 Fly ash based (*fourth revision*)
(12)	455 : 2015	Specification for Portland slag cement (*fifth revision*)

IS No.	*Title*
(13) 3812 (Part 1) : 2013	Specification for pulverized fuel ash: Part 1 For use as pozzolana in cement, cement mortar and concrete (*third revision*)
(14) 12089 : 1987	Specification for granulated slag for manufacture of Portland slag cement
(15) 4925 : 2004	Specification for concrete batching and mixing plant (*first revision*)
(16) 4926 : 2003	Code of practice for ready-mixed concrete (*second revision*)
(17) 2386 (Part 3) : 1963	Methods of test for aggregates for concrete: Part 3 Specific gravity, density, voids, absorption and bulking
(18) 1791 : 1985	General requirements for batch type concrete mixers (*second revision*)
12119 : 1987	General requirements for pan mixers for concrete
(19) 1199 : 1959	Methods of sampling and analysis of concrete
(20) 9103 : 1999	Specification for admixtures for concrete (*first revision*)
(21) 7861	Code of practice for extreme weather concreting:
(Part 1) : 1975	Recommended practice for hot weather concreting
(Part 2) : 1981	Recommended practice for cold weather concreting
(22) 516 : 1959	Method of test for strength of concrete

NATIONAL BUILDING CODE OF INDIA

PART 6 STRUCTURAL DESIGN

Section 6 Steel

BUREAU OF INDIAN STANDARDS

CONTENTS

FOREWORD ... 5

SECTION 6(a) GENERAL

1 SCOPE ... 7
2 TERMINOLOGY ... 7
3 SYMBOLS ... 11
4 UNITS ... 17
5 STANDARD DIMENSIONS, FORM AND WEIGHT ... 17
6 PLANS AND DRAWINGS ... 17
7 CONVENTION FOR MEMBER AXES ... 18

SECTION 6(b) MATERIALS

8 GENERAL ... 18

SECTION 6(c) GENERAL DESIGN REQUIREMENTS

9 GENERAL DESIGN REQUIREMENTS ... 19

SECTION 6(d) METHODS OF STRUCTURAL ANALYSIS

10 METHODS OF STRUCTURAL ANALYSIS ... 28

SECTION 6(e) LIMIT STATE DESIGN

11 LIMIT STATE DESIGN ... 33

SECTION 6(f) DESIGN OF TENSION MEMBERS

12 DESIGN OF TENSION MEMBERS ... 38

SECTION 6(g) DESIGN OF COMPRESSION MEMBERS

13 DESIGN OF COMPRESSION MEMBERS ... 40

SECTION 6(h) DESIGN OF MEMBERS SUBJECTED TO BENDING

14 DESIGN OF MEMBERS SUBJECTED TO BENDING ... 53

SECTION 6(j) MEMBER SUBJECTED TO COMBINED FORCES

15 MEMBER SUBJECTED TO COMBINED FORCES ... 68

SECTION 6(k) CONNECTIONS

16 CONNECTIONS ... 70

SECTION 6(m) WORKING STRESS DESIGN

17 WORKING STRESS DESIGN ... 82

SECTION 6(n) DESIGN AND DETAILING FOR EARTHQUAKE LOADS

18 DESIGN AND DETAILING FOR EARTHQUAKE LOADS ... 85

SECTION 6(p) FATIGUE

19 FATIGUE ... 89

SECTION 6(q) DESIGN ASSISTED BY TESTING

20 DESIGN ASSISTED BY TESTING ... 98

SECTION 6(r) DURABILITY

21 DURABILITY ...101

SECTION 6(s) FIRE RESISTANCE

22 FIRE RESISTANCE ...102

SECTION 6(t) FABRICATION AND ERECTION

23 FABRICATION AND ERECTION ...107
ANNEX A ANALYSIS AND DESIGN METHODS ...114
ANNEX B DESIGN AGAINST FLOOR VIBRATION ...115
ANNEX C DETERMINATION OF EFFECTIVE LENGTH OF COLUMNS ...116
ANNEX D ELASTIC LATERAL TORSIONAL BUCKLING ...121
ANNEX E CONNECTIONS ...124
ANNEX F GENERAL RECOMMENDATIONS FOR STEELWORK TENDERS AND CONTRACTS ...128
ANNEX G ...131

LIST OF STANDARDS ...132

FOREWORD

This Code (Part 6/Section 6) covers the structural design aspects of steel structures in buildings.

This Section covers the use of hot-rolled structural steel sections and steel tubes in buildings. It covers the design by limit state method and plastic theory, and also enables design by working stress method.

This Section is based on IS 800 : 2007 'Code of practice for general construction in steel (*third revision*)' and IS 806 : 1968 'Code of practice for use of steel tubes in general building construction (*first revision*)'.

This Section was first published in 1970 and was subsequently revised in 1983 and 2005. In the 2005 version, the detailed design provisions were not included as IS 800 : 1984 'Code of practice for general construction in steel (*second revision*)' was under revision at that time. This Section, therefore, then referred to the 1984 version of IS 800 with the remarks that the latest version would prevail, as and when published. It, however, covered the philosophical aspects of limit state design which was being introduced in the revision of IS 800. IS 800 was subsequently revised and published as IS 800 : 2007 and hence, became the prevailing version for use under this Section.

In the revision of IS 800 in 2007, in view of the development and production of new varieties of medium and high tensile structural steels in the country, the scope of the standard was modified permitting the use of any variety of structural steel provided the relevant provisions of the standard were satisfied. IS 800 : 2007 makes reference to the latest Indian Standards available for rivets, bolts and other fasteners. The standard is based on limit state method, reflecting the latest developments.

This revision of the Section is intended to bring it in line with the revised version of IS 800 : 2007 read with its Amendment No. 1 and to take care of further improvements and incorporations required. In this revision, therefore, the following major modifications have been made:

a) The table on tensile properties of structural steel products has been updated by including yield stress values of bolts of sizes 3.6 to 6.8 mm as per IS 1367 (Part 3) 'Mechanical properties of fasteners made of carbon steel and alloy steel – bolts, screws and studs (*fourth revision*)' and aligning the corresponding provisions of the table with those given in IS 2062 : 2011 'Hot rolled low, medium and high tensile structural steel (*seventh revision*)'.
b) Provisions relating to mechanical properties of structural steel have been elaborated.
c) Provisions related to effective wind pressure on exposed circular tube members have been included.
d) Provisions related to requirement of temperature stress analysis have been updated.
e) Provisions related to slender cross-sections have been updated, with the inclusion of two new figures on effective sections of slender members under pure and flexural compression.
f) The table on deflection limits has been suitably updated with respect to the load nomenclature of the load and their combinations.
g) The term 'imposed load' has been substituted for 'live load' in coherence with the use of terminology in other published standards.
h) Warping restraint conditions in the table on effective lengths for simply supported beams have been clarified.
j) The provision on assessment of conditions under which fatigue assessment is to be done, is covered comprehensively in **19.2.1.2** 'Necessity for Fatigue Assessment', which takes care of **13.5.1** of IS 800 : 2007 as well.
k) Provisions related to design of end panels in stiffened web panels have been updated.
m) Provisions related to design for earthquake loads relating to load and load combinations, response reduction factor for various types of frames, connections in the critical zones of frames, and bracing members have been updated.
n) The nominal bearing pressure between the column base plate and the support has been updated to bring

it line with the corresponding provisions of IS 456 : 2000 'Code of practice for plain and reinforced concrete (*fourth revision*)'.

p) Provisions related to design of single angle struts loaded through one leg have been revised.

q) Provisions related to non-ductile braced and moment resisting frames have been included.

r) Provisions on ductile designing with respect to column base connections have been updated.

s) Reference design conditions under fatigue for S-N curve have been modified.

t) Provisions on clearances related to fabrication procedures have been updated.

u) Sketches of the restraint conditions under table on effective lengths of single stepped columns have been updated.

w) Certain terminologies, symbols and figures have been updated based on the changes incorporated.

y) List of Indian Standards cross-referred in this Section has been updated.

The revised Section will enhance the confidence of designers, engineers, contractors, technical institutions, professional bodies and the industry and will open a new era in safe and economic construction in steel.

In the earlier versions of this Code, the provisions relating to the use of steel tubes in general building construction was based on IS 806 : 1968 'Code of practice for use of steel tubes in general building construction', which was complementary to IS 800. The design using tubular steel in structural applications may be carried using the limit state design provisions in this Section until IS 806 is revised as per limit state design method.

The design of cold-formed steel members is based on the provisions of IS 801 : 1975 'Code of practice for use of cold formed light gauge steel structural members in general building construction'. The standard is currently under revision to be based on the limit state design practice. Until the revised IS 801 is published, the cold formed steel members may be designed using the current IS 801, based on the working stress method.

All standards, whether given herein above or cross-referred to in the main text of this Section, are subject to revision. The parties to agreement based on this Section are encouraged to investigate the possibility of applying the most recent editions of the standards.

For the purpose of deciding whether a particular requirement of this Section is complied with, the final value, observed or calculated, expressing the result of a test or analysis, shall be rounded off in accordance with IS 2 : 1960 'Rules for rounding off numerical values (*revised*)'. The number of significant places retained in the rounded off value should be the same as that of the specified value in this Section.

NATIONAL BUILDING CODE OF INDIA

PART 6 STRUCTURAL DESIGN

Section 6 Steel

SECTION 6(a) GENERAL

1 SCOPE

1.1 This Code (Part 6/Section 6) covers the structural design aspects of steel structures in buildings. This Section applies to general construction using hot rolled steel sections and steel tubes joined using riveting, bolting and welding. Cold formed light gauge steel sections, etc, are covered in separate standards. This Section covers the design by limit state method and plastic theory, and also enables design by working stress method.

1.2 This Section gives only general guidance as regards to the various loads to be considered in design. For the actual loads, such as dead, live, snow, wind and earthquake loads and load combinations to be used, reference may be made to Part 6 'Structural Design, Section 1 Loads, Forces and Effects' of the Code.

1.3 Fabrication and erection requirements covered in this Section are general and the minimum necessary quality of material and workmanship consistent with assumptions in the design rules. The actual requirements may be further developed as per other standards or the project specification, the type of structure and the method of construction.

1.4 For seismic design, recommendations pertaining to steel frames only are covered in this section. For more detailed information on seismic design of other structural and non-structural components, reference may be made to **5** of Part 6 'Structural Design, Section 1 Loads, Forces and Effects' of the Code and other special publications on the subject.

2 TERMINOLOGY

For the purpose of this Section, the definitions given below shall apply.

2.1 Accidental Loads — Loads due to explosion, impact of vehicles, or other rare loads for which the structure is considered to be vulnerable as per the user.

2.2 Accompanying Load — Live (imposed) load acting along with leading imposed load but causing lower actions and/or deflections.

2.3 Action Effect or Load Effect — The internal force, axial, shear, bending or twisting moment, due to external actions and temperature loads.

2.4 Action — The primary cause for stress or deformations in a structure such as dead, live, wind, seismic or temperature loads.

2.5 Actual Length — The length between centre-to-centre of intersection points, with supporting members or the cantilever length in the case of a free standing member.

2.6 Beam — A member subjected predominantly to bending.

2.7 Bearing Type Connection — A connection made using bolts in 'snug-tight' condition, or rivets where the load is transferred by bearing of bolts or rivets against plate inside the bolt hole.

2.8 Braced Member — A member in which the relative transverse displacement is effectively prevented by bracing.

2.9 Brittle Cladding — Claddings, such as asbestos cement sheets which get damaged before undergoing considerable deformation.

2.10 Buckling Load — The load at which an element, a member or a structure as a whole, either collapses in service or buckles in a load test and develops excessive lateral (out of plane) deformation or instability.

2.11 Buckling Strength or Resistance — Force or moment, which a member can withstand without buckling.

2.12 Built-Up Section — A member fabricated by interconnecting more than one element to form a compound section acting as a single member.

2.13 Camber — Intentionally introduced pre-curving (usually upwards) in a system, member or any portion of a member with respect to its chord. Frequently, camber is introduced to compensate for deflections at a specific level of loads.

2.14 Characteristic Load (Action) — The value of specified load (action), above which not more than a specified percentage (usually 5 percent) of samples of corresponding load are expected to be encountered.

2.15 Characteristic Yield/Ultimate Stress — The minimum value of stress, below which not more than a specified percentage (usually 5 percent) of corresponding stresses of samples tested are expected to occur.

2.16 Column — A member in upright (vertical) position which supports a roof or floor system and predominantly subjected to compression.

2.17 Compact Section — A cross-section, which can develop plastic moment, but has inadequate plastic rotation capacity needed for formation of a plastic collapse mechanism of the member or structure.

2.18 Constant Stress Range — The amplitude between which the stress ranges under cyclic loading is constant during the life of the structure or a structural element.

2.19 Corrosion — An electrochemical process over the surface of steel, leading to oxidation of the metal.

2.20 Crane Load — Horizontal and vertical loads from cranes.

2.21 Cumulative Fatigue — Total damage due to fatigue loading of varying stress ranges.

2.22 Cut-Off Limit — The stress range, corresponding to the particular detail, below which cyclic loading need not be considered in cumulative fatigue damage evaluation (corresponds to 10^8 number of cycles in most cases).

2.23 Dead Loads — The self-weights of all permanent constructions and installations including the self-weight of all walls, partitions, floors, roofs, and other permanent fixtures acting on a member.

2.24 Deflection — It is the deviation from the standard position of a member or structure.

2.25 Design Life — Time period for which a structure or a structural element is required to perform its function without damage.

2.26 Design Load/Factored Load — A load value obtained by multiplying the characteristic load with the partial safety factor for loads.

2.27 Design Spectrum — Frequency distribution of the stress ranges from all the nominal loading events during the design life (stress spectrum).

2.28 Detail Category — Designation given to a particular detail to indicate the S-N curve to be used in fatigue assessment.

2.29 Discontinuity — A sudden change in cross-section of a loaded member, causing a stress concentration at the location.

2.30 Ductility — It is the property of the material or a structure indicating the extent to which it can deform beyond the limit of yield deformation before failure or fracture. The ratio of ultimate to yield deformation is usually termed as ductility.

2.31 Durability — It is the ability of a material to resist deterioration over long periods of time.

2.32 Earthquake Loads — The inertia forces produced in a structure due to the ground movement during an earthquake.

2.33 Edge Distance — Distance from the centre of a fastener hole to the nearest edge of an element measured perpendicular to the direction of load transfer.

2.34 Effective Lateral Restraint — Restraint that produces sufficient resistance to prevent deformation in the lateral direction.

2.35 Effective Length — Actual length of a member between points of effective restraints or effective restraint and free end, multiplied by a factor to take account of the end conditions in buckling strength calculations.

2.36 Elastic Cladding — Claddings, such as metal sheets that can undergo considerable deformation without damage.

2.37 Elastic Critical Moment — The elastic moment, which initiates lateral-torsional buckling of a laterally unsupported beam.

2.38 Elastic Design — Design, which assumes elastic behaviour of materials throughout the service load range.

2.39 Elastic Limit — It is the stress below which the material regains its original size and shape when the load is removed. In steel design, it is taken as the yield stress.

2.40 End Distance — Distance from the centre of a fastener hole to the edge of an element measured parallel to the direction of load transfer.

2.41 Erection Loads — The actions (loads and deformations) experienced by the structure exclusively during erection.

2.42 Erection Tolerance — Amount of deviation related to the plumbness, alignment, and level of the element as a whole in the erected position. The deviations are determined by considering the locations of the ends of the element.

2.43 Exposed Surface Area to Mass Ratio — The ratio of the surface area exposed to the fire (in mm^2) to the mass of steel (in kg).

NOTE — In the case of members with fire protection material applied, the exposed surface area is to be taken as the internal surface area of the fire protection material.

2.44 Fabrication Tolerance — Amount of deviation allowed in the nominal dimensions and geometry in fabrication activities, such as cutting to length, finishing of ends, cutting of bevel angles, etc.

2.45 Factor of Safety — The factor by which the yield stress of the material of a member is divided to arrive at the permissible stress in the material.

2.46 Fatigue — Damage caused by repeated fluctuations of stress, leading to progressive cracking of a structural element.

2.47 Fatigue Loading — Set of nominal loading events, cyclic in nature, described by the distribution of the loads, their magnitudes and the numbers of applications in each nominal loading event.

2.48 Fatigue Strength — The stress range for a category of detail, depending upon the number of cycles it is required to withstand during design life.

2.49 Fire Exposure Condition

a) *Three-sided fire exposure condition* — Steel member incorporated in or in contact with a concrete or masonry floor or wall (at least against on surface).

NOTES

1 Three-sided fire exposure condition is to be considered separately unless otherwise specified (*see* **22.10**).

2 Members with more than one face in contact with a concrete or masonry floor or wall may be treated as three-sided fire exposure.

b) *Four-sided fire exposure condition* — Steel member, which may be exposed to fire on all sides.

2.50 Fire Protection System — The fire protection material and its method of attachment to the steel member.

2.51 Fire Resistance — The ability of an element, component or structure, to fulfil for a stated period of time, the required stability, integrity, thermal insulation and/or other expected performance specified in a standard fire test.

2.52 Fire Resistance Level — The fire resistance grading period for a structural element or system, in minutes, which is required to be attained in the standard fire test.

2.53 Flexural Stiffness — Stiffness of a member against rotation as evaluated by the value of bending deformation moment required to cause a unit rotation while all other degrees of freedom of the joints of the member except the rotated one are assumed to be restrained.

2.54 Friction Type Connection — Connection effected by using pre-tensioned high strength bolts where shear force transfer is due to mobilization of friction between the connected plates due to clamping force developed at the interface of connected plates by the bolt pre-tension.

2.55 Gauge — The spacing between adjacent parallel lines of fasteners, transverse to the direction of load/stress.

2.56 Gravity Load — Loads arising due to gravitational effects.

2.57 Gusset Plate — The plate to which the members intersecting at a joint are connected.

2.58 High Shear — High shear condition is caused when the actual shear due to factored load is greater than a certain fraction of design shear resistance (*see* **15.2.2**).

2.59 Imposed (Live) Load — The load assumed to be produced by the intended use or occupancy including distributed, concentrated, impact, vibration and snow loads but excluding, wind, earthquake and temperature loads.

2.60 Instability — The phenomenon which disables an element, member or a structure to carry further load due to excessive deflection lateral to the direction of loading and vanishing stiffness.

2.61 Lateral Restraint for a Beam — *See* **2.34**.

2.62 Leading Imposed Load — Imposed load causing higher action and/or deflection.

2.63 Limit State — Any limiting condition beyond which the structure ceases to fulfill its intended function (*see also* **2.86**).

2.64 Live Load — *See* **2.59**.

2.65 Load — An externally applied force or action (*see also* **2.4**).

2.66 Main Member — A structural member, which is primarily responsible for carrying and distributing the applied load or action.

2.67 Mill Tolerance — Amount of variation allowed from the nominal dimensions and geometry, with respect to cross-sectional area, non-parallelism of flanges, and out of straightness such as sweep or camber, in a product, as manufactured in a steel mill.

2.68 Normal Stress — Stress component acting normal to the face, plane or section.

2.69 Partial Safety Factor — The factor normally greater than unity by which either the loads (actions) are multiplied or the resistances are divided to obtain the design values.

2.70 Period of Structural Adequacy under Fire — The time (t), in minutes, for the member to reach the limit state of structural inadequacy in a standard fire test.

2.71 Permissible Stress — When a structure is being designed by the working stress method, the maximum stress that is permitted to be experienced in elements, members or structures under the nominal/service load (action).

2.72 Pitch — The centre-to-centre distance between individual fasteners in a line, in the direction of load/stress.

2.73 Plastic Collapse — The failure stage at which sufficient number of plastic hinges have formed due to the loads (actions) in a structure leading to a failure mechanism.

2.74 Plastic Design — Design against the limit state of plastic collapse.

2.75 Plastic Hinge — A yielding zone with significant inelastic rotation, which forms in a member, when the plastic moment is reached at a section.

2.76 Plastic Moment — Moment capacity of a cross-section when the entire cross-section has yielded due to bending moment.

2.77 Plastic Section — Cross-section, which can develop a plastic hinge and sustain plastic moment over sufficient plastic rotation required for formation of plastic failure mechanism of the member or structure.

2.78 Poisson's Ratio — It is the absolute value of the ratio of lateral strain to longitudinal strain under uniaxial loading.

2.79 Proof Stress — The stress to which high strength friction grip (HSFG) bolts are pre-tensioned.

2.80 Proof Testing — The application of test loads to a structure, sub-structure, member or connection to ascertain the structural characteristics of only that specific unit.

2.81 Prototype Testing — Testing of structure, sub-structure, members or connections to ascertain the structural characteristics of that class of structures, sub-structures, members or connections that are nominally identical (full scale) to the units tested.

2.82 Prying Force — Additional tensile force developed in a bolt as a result of the flexing of a connection component such as a beam end plate or leg of an angle.

2.83 Rotation — The change in angle at a joint between the original orientation of two linear member and their final position under loading.

2.84 Secondary Member — Member which is provided for overall stability and or for restraining the main members from buckling or similar modes of failure.

2.85 Semi-Compact Section — Cross-section, which can attain the yield moment, but not the plastic moment before failure by plate buckling.

2.86 Serviceability Limit State — A limit state of acceptable service condition exceedance of which causes serviceability failure.

2.87 Shear Force — The in-plane force at any transverse cross-section of a straight member of a column or beam.

2.88 Shear Lag — The in plane shear deformation effect by which concentrated forces tangential to the surface of a plate gets distributed over the entire section perpendicular to the load over a finite length of the plate along the direction of the load.

2.89 Shear Stress — The stress component acting parallel to a face, plane or cross-section.

2.90 Slender Section — Cross-section in which the elements buckle locally before reaching yield moment.

2.91 Slenderness Ratio — The ratio of the effective length of a member to the radius of gyration of the Cross-section about the axis under consideration.

2.92 Slip Resistance — Limit shear that can be applied in a friction grip connection before slip occurs.

2.93 S-N Curve — The curve defining the relationship between the number of stress cycles to failure (N_{sc}) at a constant stress range (S_c), during fatigue loading of a structure.

2.94 Snow Load — Load on a structure due to the accumulation of snow and ice on surfaces such as roof.

2.95 Snug Tight — The tightness of a bolt achieved by a few impacts of an impact wrench or by the full effort of a person using a standard spanner.

2.96 Stability Limit State — A limit state corresponding to the loss of static equilibrium of a structure by excessive deflection transverse to the direction of predominant loads.

2.97 Stickability — The ability of the fire protection system to remain in place as the member deflects under load during a fire test.

2.98 Stiffener — An element used to retain or prevent the out-of-plane deformations of plates.

2.99 Strain — Deformation per unit length or unit angle.

2.100 Strain Hardening — The phenomenon of increase in stress with increase in strain beyond yielding.

2.101 Strength — Resistance to failure by yielding or buckling.

2.102 Strength Limit State — A limit state of collapse or loss of structural integrity.

2.103 Stress — The internal force per unit area of the original cross-section.

2.104 Stress Analysis — The analysis of the internal force and stress condition in an element, member or structure.

2.105 Stress Cycle Counting — Sum of individual stress cycles from stress history arrived at using any rational method.

2.106 Stress Range — Algebraic difference between two extremes of stresses in a cycle of loading.

2.107 Stress Spectrum — Histogram of stress cycles produced by a nominal loading event design spectrum, during design life.

2.108 Structural Adequacy for Fire — The ability of the member to carry the test load exposed to the standard fire test.

2.109 Structural Analysis — The analysis of stress, strain, and deflection characteristics of a structure.

2.110 Strut — A compression member, which may be oriented in any direction.

2.111 Sway — The lateral deflection of a frame.

2.112 Sway Member — A member in which the transverse displacement of one end, relative to the other is not effectively prevented.

2.113 Tensile Stress — The characteristic stress corresponding to rupture in tension, specified for the grade of steel in the appropriate Indian Standard, as listed in Table 1.

2.114 Test Load — The factored load, equivalent to a specified load combination appropriate for the type of test being performed.

2.115 Transverse — Direction along the stronger axes of the cross-section of the member.

2.116 Ultimate Limit State — The state which, if exceeded can cause collapse of a part or the whole of the structure.

2.117 Ultimate Stress — *See* **2.113**.

2.118 Wind Loads — Load experienced by member or structure due to wind pressure acting on the surfaces.

2.119 Yield Stress — The characteristic stress of the material in tension before the elastic limit of the material is exceeded, as specified in the appropriate Indian Standard, as listed in Table 1.

3 SYMBOLS

Symbols used in this section shall have the following meanings with respect to the structure or member or condition, unless otherwise defined elsewhere in this Section:

A — Area of cross-section

A_c — Area at root of threads

A_e — Effective cross-sectional area

A_{ef} — Reduced effective flange area

A_f — Total flange area

A_g — Gross cross-sectional area

A_{gf} — Gross cross-sectional area of flange

A_{go} — Gross cross-sectional area of outstanding (not connected) leg of a member

A_n — Net area of the total cross-section

A_{nb} — Net tensile cross-sectional area of bolt

A_{nc} — Net cross-sectional area of the connected leg of a member

A_{nf} — Net cross-sectional area of each flange

A_{no} — Net cross-sectional area of outstanding (not connected) leg of a member

A_{pb} — Nominal bearing area of bolt on any plate

A_q — Cross-sectional area of a bearing (load carrying) stiffener in contact with the flange

A_s — Tensile stress area

A_{sb} — Gross cross-sectional area of a bolt at the shank

A_{tg} — Gross sectional area in tension from the centre of the hole to the toe of the angle section/channel section, etc (Block shear failure, *see* **12.4**) perpendicular to the line of force

A_{tn} — Net sectional area in tension from the centre of the hole to the toe of the angle perpendicular to the line of force Block shear failure (*see* **12.4**)

A_v — Shear area

A_{vg} — Gross cross-sectional area in shear along the line of transmitted force (*see* **12.4**)

A_{vn} — Net cross-sectional area in shear along the line of transmitted force (*see* **12.4**)

a, b — Larger and smaller projection of the slab base beyond the rectangle circumscribing the column, respectively (*see* **13.4**)

a_o — Peak acceleration

a_1 — Unsupported length of individual elements being laced between lacing points

B — Length of side of cap or base plate of a column

b — Outstand/width of the element

b_1 — Stiff bearing length

b_e — Effective width of flange between pair of bolts

b_f — Width of the flange

b_i — Width of flange as an internal element

b_o — Width of flange outstand

b_p — Panel zone width between column flanges at beam-column junction

b_s — Shear lag distance

b_t — Width of tension field

b_w — Width of outstanding leg

C — Centre-to-centre longitudinal distance of battens

C_m — Coefficient of thermal expansion

c — Spacing of transverse stiffener

c_b — Moment amplification factor for braced member

c_m — Moment reduction factor for lateral torsional buckling strength calculation

c_s — Moment amplification factor for sway frame

D — Overall depth/diameter of the cross-section

d — Depth of web, nominal diameter

d_2 — Twice the clear distance from the compression flange angles, plates or tongue plates to the neutral axis

d_h — Diameter of a bolt/ rivet hole

d_o — Nominal diameter of the pipe column or the dimensions of the column in the depth direction of the base plate

d_p — Panel zone depth in the beam-column junction

E — Modulus of elasticity for steel

$E(T)$ — Modulus of elasticity of steel at T°C

$E(20)$ — Modulus of elasticity of steel at 20°C

E_p — Modulus of elasticity of the panel material

F_{cdw} — Buckling strength of un-stiffened beam web under concentrated load

F_d — Factored design load

F_n — Normal force

F_o — Minimum proof pretension in high strength friction grip bolts

F_{psd} — Bearing capacity of load carrying stiffener

F_q — Stiffener force

F_{qd} — Stiffener buckling resistance

F_{test} — Test load

$F_{test,a}$ — Load for acceptance test

$F_{test,Min}$ — Minimum test load from the test to failure

$F_{test,R}$ — Test load resistance

$F_{test,S}$ — Strength test load

F_w — Design capacity of the web in bearing

F_x — External load, force or reaction

F_{xd} — Buckling resistance of load carrying web stiffener

f — Actual normal stress range for the detail category

f_1 — Frequency for a simply supported one way system

f_2 — Frequency of floor supported on steel girder perpendicular to the joist

f_a — Calculated stress due to axial force at service load

f_{abc} — Permissible bending stress in compression at service load

f_{ac} — Permissible compressive stress at service load

f_{abt} — Permissible bending stress in tension at service load

f_{apb} — Permissible bearing stress of the bolt at service load

f_{asb} — Permissible stress of the bolt in shear at service load

f_{at} — Permissible tensile stress at service load

f_{atb} — Permissible tensile stress of the bolt at service load

f_{aw} — Permissible stress of the weld at service load

f_b — Actual bending stress at service load

f_{bc} — Actual bending stress in compression at service load

f_{bd} — Design bending compressive stress corresponding to lateral buckling

f_{br} — Actual bearing stress due to bending at service load

f_{bt} — Actual bending stress in tension at service load

f_{bs} — Permissible bending stress in column base at service load

f_c — Actual axial compressive stress at service load

f_{cc} — Elastic buckling stress of a column, Euler buckling stress

f_{cd} — Design compressive stress

$f_{cr,b}$ — Extreme fibre compressive stress

corresponding to elastic lateral buckling moment

f_e — Equivalent stress at service load

f_f — Fatigue stress range corresponding to 5×10^6 cycles of loading

f_{feq} — Equivalent constant amplitude stress

f_{fd} — Design normal fatigue strength

$f_{f,\,Max}$ — Highest normal stress range

f_{fn} — Normal fatigue stress range

f_{nw} — Normal stress in weld at service load

f_o — Proof stress

f_p — Actual bearing stress at service load

f_{pb} — Actual bearing stress in bending at service load

f_{psd} — Bearing strength of the stiffeners

f_r — Frequency

f_{sb} — Actual shear stress in bolt at service load

f_t — Actual tensile stress at service load

f_{tb} — Actual tensile stress of the bolt at service load

f_u — Characteristic ultimate tensile stress

f_{ub} — Characteristic ultimate tensile stress of the bolt

f_{um} — Average ultimate stress of the material as obtained from test

f_{up} — Characteristic ultimate tensile stress of the connected plate

f_v — Applied shear stress in the panel designed utilizing tension field action

f_w — Actual stress of weld at service load

f_{wd} — Design stress of weld at service load

f_{wn} — Nominal strength of fillet weld

f_x — Maximum longitudinal stress under combined axial force and bending

f_y — Characteristic yield stress

$f_y(T)$ — Yield stress of steel at T °C

$f_y(20)$ — Yield stress of steel at 20°C

f_{yb} — Characteristic yield stress of bolt

f_{yf} — Characteristic yield stress of flange

f_{ym} — Average yield stress as obtained from test

f_{yp} — Characteristic yield stress of connected plate

f_{yq} — Characteristic yield stress of stiffener material

f_{yw} — Characteristic yield stress of the web material

G — Modulus of rigidity for steel

g — Gauge length between centres of the holes perpendicular to the load direction, acceleration due to gravity

h — Depth of the section

h_b — Total height from the base to the floor level concerned

h_c — Height of the column

h_e — Effective thickness

h_f — Centre-to-centre distance of flanges

h_i — Thickness of fire protection material

h_L — Height of the lip

h_s — Storey height

h_y — Distance between shear centre of the two flanges of a cross-section

I — Moment of inertia of the member about an axis perpendicular to the plane of the frame

I_{fc} — Moment of inertia of the compression flange of the beam about the axis parallel to the web

I_{ft} — Moment of inertia of the tension flange of the beam about minor axis

I_q — Moment of inertia of a pair of stiffener about the centre of the web, or a single stiffener about the face of the web.

I_s — Second moment of inertia

I_{so} — Second moment of inertia of the stiffener about the face of the element perpendicular to the web

I_T — Transformed moment of inertia of the one way system (in terms of equivalent steel, assuming the concrete flange of width equal to the spacing of the beam to be effective)

I_t — St. Venant's torsion constant

I_w — Warping constant

I_y — Moment of inertia about the minor axis of the cross-section

I_z — Moment of inertia about the major axis of the cross-section

K_b — Effective stiffness of the beam and column

K_h — Reduction factor to account for the high strength friction grip connection bolts in oversized and slotted holes

KL — Effective length of the member

KL/r — Appropriate effective slenderness ratio of the section

KL/r_y — Effective slenderness ratio of the

section about the minor axis of the section

KL/r_z — Effective slenderness ratio of the section about the major axis of the section

$\left(\frac{KL}{r}\right)_o$ — Actual maximum effective slenderness ratio of the laced column

$\left(\frac{KL}{r}\right)_e$ — Effective slenderness ratio of the laced column accounting for shear deformation

K_v — Shear buckling coefficient

K_w — Warping restraint factor

k — Regression coefficient

k_{sm} — Exposed surface area to mass ratio

K_y, K_z, K_{LT} — Moment amplification factors (*see* **10.4.2**, **10.4.3.1**, **10.4.3.3** and **15.3.2.2**)

L — Actual length, unsupported length, length centre-to-centre distance of the intersecting members, cantilever length

L_c — Length of end connection in bolted and welded members, taken as the distance between outermost fasteners in the end connection, or the length of the end weld, measured along the length of the member

L_{LT} — Effective length for lateral torsional buckling

L_m — Maximum distance from the restraint to the compression flange at the plastic hinge to an adjacent restraint (limiting distance)

L_o — Length between points of zero moment (inflection) in the span

l — Centre-to-centre length of the supporting member

l_e — Distance between prying force and bolt centre line

l_g — Grip length of bolts in a connection

l_j — Length of the joint

l_s — Length between points of lateral support to the compression flange in a beam.

l_v — Distance from bolt centre line to the toe of fillet weld or to half the root radius for a rolled section

l_w — Length of weld

M — Bending moment

M_a — Applied bending moment

M_{cr} — Elastic critical moment corresponding to lateral torsional buckling of the beam

M_d — Design flexural strength

M_{dv} — Moment capacity of the section under high shear

M_{dy} — Design bending strength about the minor axis of the cross-section

M_{dz} — Design bending strength about the major axis of the cross-section

M_{eff} — Reduced effective moment

M_{fr} — Reduced plastic moment capacity of the flange plate

M_{fd} — Design plastic resistance of the flange alone

M_{nd} — Design bending strength under combined axial force and uniaxial moment

M_{ndy}, M_{ndz} — Design bending strength under combined axial force and the respective uniaxial moment acting alone

M_p — Plastic moment capacity of the section

M_{pb} — Moment in the beam at the intersection of the beam and column centre lines

M_{pc} — Moments in the column above and below the beam surfaces

M_{pd} — Plastic design strength

M_{pdf} — Plastic design strength of flanges only

M_q — Applied moment on the stiffener

M_s — Moment at service (working) load

M_{tf} — Moment resistance of tension flange

M_y — Factored applied moment about the minor axis of the cross-section

M_{yq} — Moment capacity of the stiffener based on its elastic modulus

M_z — Factored applied moment about the major axis of the cross-section

N — Number of parallel planes of battens

N_d — Design strength in tension or in compression

N_f — Axial force in the flange

N_{SC} — Number of stress cycles

n — Number of bolts in the bolt group/ critical section

n_e — Number of effective interfaces offering frictional resistance to slip

n_n — Number of shear planes with the threads intercepting the shear plane in the bolted connection

n_s — Number of shear planes without threads intercepting the shear plane in the bolted connection

P — Factored applied axial force

P_{cc} — Elastic buckling load

P_d — Design axial compressive strength

P_{dy}, P_{dz} — Design compression strength as governed by flexural buckling about the respective axis

P_e — Elastic Euler buckling load

P_{min} — Minimum required strength for each flange splice

P_r — Required compressive strength

P_s — Actual compression at service load

P_y — Yield strength of the cross-section under axial compression

p — Pitch length between centres of holes parallel to the direction of the load

p_s — Staggered pitch length along the direction of the load between lines of the bolt holes (*see* Fig. 5)

Q — Prying force

Q_a — Accidental load (Action)

Q_c — Characteristic loads (Action)

Q_d — Design load (Action)

Q_p — Permanent loads (Action)

Q_v — Variable loads (Action)

q — Shear stress at service load

R — Ratio of the mean compressive stress in the web (equal to stress at mid depth) to yield stress of the web; reaction of the beam at support

R_d — Design strength of the member at room temperature

R_i — Net shear in bolt group at bolt 'i'

R_r — Response reduction factor

R_{tf} — Flange shear resistance

R_u — Ultimate strength of the member at room temperature

r — Appropriate radius of gyration

r_1 — Minimum radius of gyration of the individual element being laced together

r_f — Ratio of the design action on the member under fire to the design capacity

r_{vv} — Radius of gyration about the minor axis (v-v) of angle section.

r_y — Radius of gyration about the minor axis

r_z — Radius of gyration about the major axis

S — Minimum transverse distance between the centroid of the rivet or bolt group or weld group

S_c — Constant stress range

S_d — Design strength

S_o — Original cross-sectional area of the test specimen

S_p — Spring stiffness

S_u — Ultimate strength

s_c — Anchorage length of tension field along the compression flange

s_t — Anchorage length of tension field along the tension flange

s_a — Actual stiffener spacing

T — Temperature, in degree Celsius; Factored tension

T_b — Applied tension in bolt

T_{cf} — Thickness of compression flange

T_d — Design strength under axial tension

T_{dg} — Yielding strength of gross section under axial tension

T_{dn} — Rupture strength of net section under axial tension

T_{db} — Design strength of bolt under axial tension, block shear strength at end connection

T_e — Externally applied tension

T_f — Factored tension force of friction type bolt

T_l — Limiting temperature of the steel

T_{nb} — Nominal strength of bolt under axial tension

T_{nd} — Design tension capacity

T_{ndf} — Design tension capacity of friction type bolt

T_{nf} — Nominal tensile strength of friction type bolt

T_s — Actual tension under service load

t — Thickness of element/angle, time in minutes

t_f — Thickness of flange

t_p — Thickness of plate

t_{pk} — Thickness of packing

t_q — Thickness of stiffener

t_s — Thickness of base slab

t_t — Effective throat thickness of welds

t_w — Thickness of web,

V — Factored applied shear force

V_b — Shear in batten plate

V_{bf} — Factored frictional shear force in friction type connection

V_{cr} — Critical shear strength corresponding to web buckling

V_d — Design shear strength

V_{db} — Block shear strength

V_{nb} — Nominal shear strength of bolt

V_{nbf} — Bearing capacity of bolt for friction type connection

V_p — Plastic shear resistance under pure shear

V_n — Nominal shear strength

V_{npb} — Nominal bearing strength of bolt

V_{nsb} — Nominal shear capacity of a bolt

V_{nsf} — Nominal shear capacity of bolt as governed by slip in friction type connection

V_s — Transverse shear at service load

V_{sb} — Factored shear force in the bolt

V_{sd} — Design shear capacity

V_{sdf} — Design shear strength in friction type bolt

V_{sf} — Factored design shear force of friction bolts

V_t — Applied transverse shear

V_{tf} — Shear resistance in tension field

W — Total load

w — Uniform pressure from below on the slab base due to axial compression under the factored load

w_{tf} — Width of tension field

x_t — Torsional index

Z_e — Elastic section modulus

Z_{ec} — Elastic section modulus of the member with respect to extreme compression fibre

Z_{et} — Elastic section modulus of the member with respect to extreme tension fibre

Z_p — Plastic section modulus

Z_v — Contribution to the plastic section modulus of the total shear area of the cross-section

y_g — Distance between point of application of the load and shear centre of the cross-section

y_s — Coordinate of the shear centre in respect to centroid

α — Imperfection factor for buckling strength in columns and beams

α_t — Coefficient of thermal expansion

β_M — Ratio of smaller to the larger bending moment at the ends of a beam column

β_{My}, β_{Mz} — Equivalent uniform moment factor for flexural buckling for y-y and z-z axes, respectively

β_{MLT} — Equivalent uniform moment factor for lateral torsional buckling

χ — Strength reduction factor to account for buckling under compression

χ_m — Strength reduction factor, χ, at f_{ym}

χ_{LT} — Strength reduction factor to account for lateral torsional buckling of beams

δ — Storey deflection

δ_L — Horizontal deflection of the bottom of storey due to combined gravity and notional load

δ_p — Load amplification factor

δ_u — Horizontal deflection of the top of storey due to combined gravity and notional load

ϕ — Inclination of the tension field stress in web

γ — Unit weight of steel

γ_f — Partial safety factor for load

γ_m — Partial safety factor for material

γ_{m0} — Partial safety factor against yield stress and buckling

γ_{m1} — Partial safety factor against ultimate stress

γ_{mb} — Partial safety factor for bolted connection with bearing type bolts

γ_{mf} — Partial safety factor for bolted connection with high strength friction grip bolts

γ_{ff} — Partial safety factor for fatigue load

γ_{mft} — Partial safety factor for fatigue strength

γ_{mv} — Partial safety factor against shear failure

γ_{mw} — Partial safety factor for strength of weld

ε — Yield stress ratio $(250 / f_y)^{1/2}$

λ — Non dimensional slenderness ratio

$$= \sqrt{f_y (KL/r)^2 / \pi^2 E} = \sqrt{f_y / f_{cc}}$$

$$= \sqrt{P_y / P_{cc}}$$

λ_{cr} — Elastic buckling load factor

λ_e — Equivalent slenderness ratio

λ_{LT} — Non-dimensional slenderness ratio in lateral bending

λ_{scr} — Elastic buckling load factor of each storey

μ — Poisson's ratio

μ_c — Correction factor

μ_f — Coefficient of friction (slip factor)

μ_r — Capacity reduction factor

θ — Ratio of the rotation at the hinge point to the relative elastic rotation of the far end of the beam segment containing plastic hinge

ρ — Unit mass of steel

τ — Actual shear stress range for the detail category

τ_b — Buckling shear stress

τ_{ab} — Permissible shear stress at the service load

$\tau_{cr,e}$ — Elastic critical shear stress

τ_f — Fatigue shear stress range

$\tau_{f,Max}$ — Highest shear stress range

τ_{fd} — Design shear fatigue strength

τ_{fn} — Fatigue shear stress range at N_{SC} cycle for the detail category

τ_v — Actual shear stress at service load

ψ — Ratio of the moments at the ends of the laterally unsupported length of a beam

Γ — Frame buckling load factor

NOTE — The subscripts y, z denote the y-y and z-z axes of the section, respectively. For symmetrical sections, y-y denotes the minor principal axis whilst z-z denotes the major principal axis (*see* 7).

4 UNITS

For the purpose of design calculations the following units are recommended:

a) Forces and loads, in kN, kN/m, kN/m^2;

b) Unit mass, in kg/m^3;

c) Unit weight, in kN/m^3;

d) Stresses and strengths, in N/mm^2 (MN/m^2 or MPa); and

e) Moments (bending, etc), in kNm.

For conversion of one system of units to another system, accepted standard [6-6(1)] may be referred.

5 STANDARD DIMENSIONS, FORM AND WEIGHT

The dimensions, form, weight, tolerances of all rolled shapes, all rivets, bolts, nuts, studs, and welds and other members used in any steel structure shall conform to accepted standards [6-6(2)], wherever applicable.

6 PLANS AND DRAWINGS

6.1 Plans, drawings and stress sheet shall be prepared according to accepted standards [6-6(3)].

6.1.1 *Plans*

The plans (design drawings) shall show the sizes, sections, and the relative locations of the various members. Floor levels, column centres, and offsets shall be dimensioned. Plans shall be drawn to a scale large enough to convey the information adequately. Plans shall indicate the type of construction to be employed; and shall be supplemented by such data on the assumed loads, shears, moments and axial forces to be resisted by all members and their connections, as may be required for the proper preparation of shop drawings. Any special precaution to be taken in the erection of structure, from the design consideration shall also be indicated in the drawing.

6.1.2 *Shop Drawings*

Shop drawings, giving complete information necessary for the fabrication of the component parts of the structure including the location, type, size, length and detail of all welds and fasteners shall be prepared in advance of the actual fabrication. They shall clearly distinguish between shop and field rivets, bolts and welds. For additional information to be included on drawings for designs based on the use of welding, reference shall be made to appropriate Indian Standards. Shop drawings shall be made in conformity with accepted standard [6-6(4)]. A marking diagram allotting distinct identification marks to each separate part of steel work shall be prepared. The diagram shall be sufficient to ensure convenient assembly and erection at site.

6.2 Symbols used for welding on plans and shop drawings shall be according to good practice [6-6(5)].

7 CONVENTION FOR MEMBER AXES

Unless otherwise specified convention used for member axes is as follows (*see* Fig. 1):

a) *x-x* along the member.

b) *y-y* an axis of the cross-section,

   1) perpendicular to the flanges, and

   2) perpendicular to the smaller leg in an angle section.

c) *z-z* an axis of the cross-section

   1) axis parallel to flanges, and

   2) axis parallel to smaller leg in angle section.

d) *u-u* major axis (when it does not coincide with *z-z* axis).

e) *v-v* minor axis (when it does not coincide with *y-y* axis).

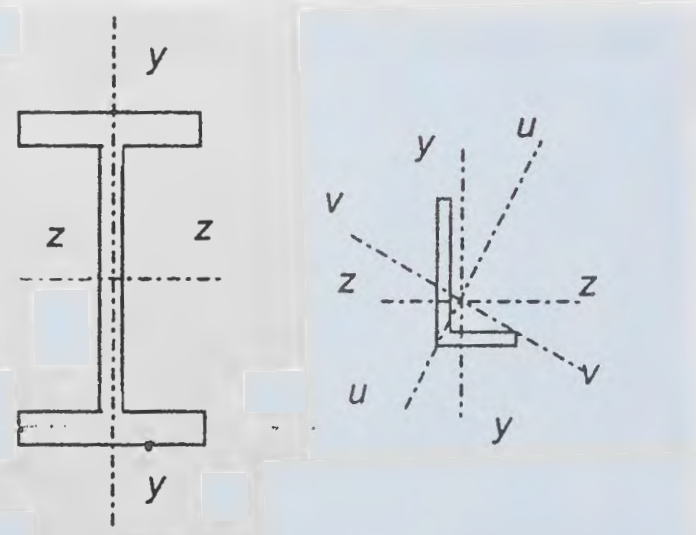

FIG. 1 AXES OF MEMBERS

SECTION 6(b) MATERIALS

8 GENERAL

8.1 The material properties given in this Section are nominal values, to be accepted as characteristic values in design calculations.

8.2 Structural Steel

8.2.1 The provisions in this Section are applicable to the steels commonly used in steel construction namely, structural mild steel and high tensile structural steel.

8.2.2 All the structural steel used in general construction, coming under the purview of this standard shall before fabrication conform to accepted standard [6-6(6)].

8.2.3 Structural steel other than those specified in **8.2.2** may also be used provided that the permissible stresses and other design provisions are suitably modified and the steel is also suitable for the type of fabrication adopted.

8.2.3.1 Steel that is not supported by mill test result may be used only in unimportant members and details, where their properties such as ductility and weldability would not affect the performance requirements of the members and the structure as a whole.

However, such steels may be used in structural system after confirming their quality by carrying out appropriate tests in accordance with the method specified in accepted standard [6-6(7)].

8.2.4 *Properties*

The properties of structural steel for use in design may be taken as given in **8.2.4.1** and **8.2.4.2**.

8.2.4.1 Physical properties of structural steel irrespective of its grade may be taken as:

a) Unit mass of steel, $\rho = 7\,850$ kg/m^3

b) Modulus of elasticity, $E = 2.0 \times 10^5$ N/mm^2 (MPa)

c) Poisson ratio, $\mu = 0.3$

d) Modulus of rigidity, $G = 0.769 \times 10^5$ N/mm^2 (MPa)

e) Coefficient of thermal expansion $\alpha_t = 12 \times 10^{-6}$/°C

8.2.4.2 *Mechanical properties of structural steel*

The principal mechanical properties of the structural steel important in design are the yield stress, f_y; the tensile or ultimate stress, f_u; the maximum percent elongation on a standard gauge length and notch toughness. Except for notch toughness, the other properties are determined by conducting tensile tests on samples cut from the plates, sections, etc, in accordance with accepted standard [6-6(7)]. Commonly used properties for the common steel products of different specifications are summarized in Table 1.

8.2.4.2.1 *Steel tubes*

Steel tubes used in building construction shall be hot finished tubes conforming to the requirements specified in accepted standard [6-6(8)].

8.2.4.2.2 Tubes made by other than hot finishing processes, or which have been subjected to cold working, shall be regarded as hot finished if they have subsequently been heat-treated and are supplied in the normalized conditions.

NOTE — Grade ERW YSt 22 tubes specified in accepted standard [6-6(8)] with a carbon content less than 0.30 percent, may be considered as hot finished for the purpose of **8.2.4.2.2**.

8.2.4.2.3 *Electrodes*

The electrodes used for welding steel tubes shall conform to the requirements of accepted standard [6-6(9)].

8.3 Rivets

8.3.1 Rivets shall be manufactured from steel conforming to accepted standard [6-6(10)]. They may also be manufactured from steel conforming to accepted standard [6-6(6)] provided that the steel meets the requirements given in accepted standard [6-6(11)].

8.3.2 Rivets shall conform to accepted standards [6-6(12)] as appropriate.

8.3.3 *High Tensile Steel Rivets*

High tensile steel rivets, shall be manufactured from steel conforming to accepted standard [6-6(13)].

8.4 Bolts, Nuts and Washers

Bolts, nuts and washers shall conform as appropriate, to accepted standards [6-6(14)]. The recommendations in good practice [6-6(15)] shall be followed.

8.5 Steel Casting

Steel casting shall conform to accepted standard [6-6(16)] or accepted standard [6-6(17)].

8.6 Welding Consumable

8.6.1 Covered electrodes shall conform to accepted standards [6-6(18)] or [6-6(19)], as appropriate.

8.6.2 Filler rods and wires for gas welding shall conform to accepted standard [6-6(20)].

8.6.3 The supply of solid filler wires for submerged arc welding of structural steels shall conform to accepted standard [6-6(21)].

8.6.4 The bare wire electrodes for submerged arc welding shall conform to accepted standard [6-6(22)]. The combination of wire and flux shall satisfy the requirements of accepted standard [6-6(22)].

8.6.5 Filler rods and bare electrodes for gas shielded metal arc welding shall conform to accepted standards [6-6(23)], as appropriate.

8.7 Other Materials

Other materials used in association with structural steel work shall conform to appropriate Indian standards.

SECTION 6(c) GENERAL DESIGN REQUIREMENTS

9 GENERAL DESIGN REQUIREMENTS

9.1 Basis for Design

9.1.1 *Design Objective*

The objective of design is the achievement of an acceptable probability that structures will perform satisfactorily for the intended purpose during the design life. With an appropriate degree of safety, they should sustain all the loads and deformations, during construction and use and have adequate resistance to certain expected accidental loads and fire. Structure should be stable and have alternate load paths to prevent disproportionate overall collapse under accidental loading.

9.1.2 *Methods of Design*

9.1.2.1 Structure and its elements shall normally, be designed by the limit state method. Account should be taken of accepted theories, experimental information and experience and the need to design for durability. Calculations alone may not produce safe, serviceable and durable structures. Suitable materials, quality control, adequate detailing and good supervision are equally important.

9.1.2.2 Where the limit states method cannot be conveniently adopted; the working stress design [*see* Section 6(m)] may be used.

9.1.3 *Design Process*

Structural design, including design for durability, construction and use should be considered as a whole. The realization of design objectives requires compliance with clearly defined standards for materials, fabrication, erection and in-service maintenance.

9.2 Loads and Forces

9.2.1 For the purpose of designing any element, member or a structure, the following loads (actions) and their effects shall be taken into account, where applicable, with partial safety factors and combinations (*see* **11.3.3**).

a) Dead loads;
b) Imposed loads (live load, crane load, snow load, dust load, wave load, earth pressures, etc);
c) Wind loads;
d) Earthquake loads;
e) Erection loads;
f) Accidental loads such as those due to blast, impact of vehicles, etc; and
g) Secondary effects due to contraction or expansion resulting from temperature changes, differential settlements of the structure as a whole or of its components, eccentric connections, rigidity of joints differing from design assumptions.

9.2.1.1 Dead loads should be assumed in design as specified in **2** of Part 6 'Structural Design, Section 1 Loads, Forces and Effects' of the Code.

Table 1 Tensile Properties of Structural Steel Products

(*Clauses* 2.113, 2.119 *and* 8.2.4.2)

Sl No.	Accepted Standard	Grade / Classification	Properties		
			Yield Stress MPa *Min*	Ultimate Tensile Stress MPa *Min*	Elongation Percent *Min*
(1)	(2)	(3)	(4)	(5)	(6)
i)	[6-6(24)]	O	—	—	—
		D	280	270-410	28
		DD	250	270-370	32
		EDD	220	270-350	35
ii)	[6-6(18)]	Ex40xx	330	410-540	16
		Ex41xx	330	410-540	20
		Ex42xx	330	410-540	22
		Ex43xx	330	410-540	24
		Ex44xx	330	410-540	24
		Ex50xx	360	510-610	16
		Ex51xx	360	510-610	18
		Ex52xx	360	510-610	18
		Ex53xx	360	510-610	20
		Ex54xx	360	510-610	20
		Ex55xx	360	510-610	20
		Ex56xx	360	510-610	20
iii)	[6-6(25)]	O	—	—	—
		D	—	240-400	25
		DD	—	260-390	28
		EDD	—	260-380	32
iv)	[6-6(26)]	3.6	180	330	25
		4.6	240	400	22
		4.8	320	420	—
		5.6	300	500	20
		5.8	400	520	—
		6.8	480	600	—
		8.8 ($d \leq 16$mm)	640 [1)]	800	12
		8.8 ($d > 16$mm)	660 [1)]	830	12
		9.8	720 [1)]	900	10
		10.9	940 [1)]	1 040	9
		12.9	1 100 [1)]	1 220	8
v)	[6-6(27)]	1	200	370	26
		1A	220	410	25
		2	230	430	24
		2A	250	460	22
		3	270	490	21
		3A	280	540	20
		4	320	620	15
		5	350	710	13
		6	370	740	10
vi)	[6-6(28)]		*d* or *t* ≤ 20	*d* or *t* > 20	
		S_t 37	220	200	360-440 26
		S_t 42	250	240	410-500 23

			t ≤16	*t* >16 and ≤40	*t* >40 and ≤60	*t* >60 and ≤100	*t* >100 and ≤350	*t* ≤60	*t* >60 and ≤100	*t* >100 and ≤350	*t* ≤60	*t* >60 and ≤350
vii)	[6-6(29)]	1	235	225	215	200	185	360-480	360-480	350-480	24	23
		2	265	255	245	215	200	410-530	410-530	400-530	22	21
		3	290	285	280	255	230	460-580	450-570	440-570	21	20

Table 1 — (*Concluded*)

(1)	(2)	(3)	(4)			(5)	(6)
			d or *t*				
			<20	20-40	> 40	410	23
viii)	[6-6(6)]	E250 (A, BR. B0, C)	250	240	230	430	22
		E275 (A, BR. B0, C)	275	265	255	440	22
		E300 (A. BR, B0, C)	300	290	280	490	22
		E350 (A, BR. B0, C)	350	330	320	540	20
		E410 (A, BR, B0, C)	410	390	380	570	20
		E450 (A. BR)	450	430	420		
			d or *t*				
			≤ 25	> 25 and ≤ 50			
ix)	[6-6(30)]	I	230	220		400-490	22
		II	235	235		400-490	22
		III	235	235		400-490	22
x)	[6-6(31)]	Grade 1	240			350-450	25
		Grade 2	245			360-450	34
xi)	[6-6(10)]	Annealed Condition	160			330 - 410	30
		As-Drawn Condition	190			410 - 490	20
xii)	[6-6(32)]	HFC 210/CDS 210/ERW210	210			330	20
		HFC 240/CDS 240/ERW240	240			410	18
		HFC 310/CDS 310/ERW310	310			450	15
xiii)	[6-6(33)]	1	170			290	30
		2	210			330	28
		3	240			410	25
		4	275			430	20
		5	310			490	15

NOTES

1 Percentage of elongation shall be taken over the gauge length of $5.65\sqrt{S_0}$, where S_0 = original cross-sectional area of the test specimen.

2 Abbreviations: O = Ordinary, D = Drawing, DD = Deep Drawing, EDD = Extra Deep Drawing.

[1] Stress at 0.2 percent non-proportional elongation, *Min.*

9.2.1.2 Imposed loads for different types of occupancy and function of structures shall be taken as recommended in **3** of Part 6 'Structural Design, Section 1 Loads, Forces and Effects' of the Code. Imposed loads arising from equipment, such as cranes and machines should be assumed in design as per manufacturers/suppliers data (*see* **9.5.4**). Snow load shall be taken as per in **6** of Part 6 'Structural Design, Section 1 Loads, Forces and Effects' of the Code.

9.2.1.3 Wind loads on structures shall be taken as per the provisions of **4** of Part 6 'Structural Design, Section 1 Loads, Forces and Effects' of the Code.

9.2.1.3.1 *Wind pressure*

In calculating the effective wind pressure on exposed circular tube members of a structure, the effective area shall be taken as 0.6 times the projected area of the member (*see* **4** of Part 6 'Structural Design, Section 1 Loads, Forces and Effects').

9.2.1.4 Earthquake loads shall be assumed as per the recommendations of **5** of Part 6 'Structural Design, Section 1 Loads, Forces and Effects' of the Code.

9.2.1.5 The erection loads and temperature effects shall be considered as specified in **9.3** and **9.4**, respectively.

9.3 Erection Loads

All loads required to be carried by the structure or any part of it due to storage or positioning of construction material and erection equipment, including all loads due to operation of such equipment shall be considered as erection loads. Proper provision shall be made,

including temporary bracings, to take care of all stresses developed during erection. Dead load, wind load and also such parts of the imposed load as would be imposed on the structure during the period of erection shall be taken as acting together with the erection loads. The structure as a whole and all parts of the structure in conjunction with the temporary bracings shall be capable of sustaining these loads during erection.

9.4 Temperature Effects

9.4.1 Expansion and contraction due to changes in temperature of the members and elements of a structure shall be considered and adequate provision made for such effect.

9.4.2 The temperature range varies for different localities and under different diurnal and seasonal conditions. The absolute maximum and minimum temperatures, which may be expected in different localities of the country, may be obtained from the India Meteorological Department and used in assessing the maximum variations of temperature for which provision for expansion and contraction has to be made in the structure.

9.4.3 The range of variation in temperature of the building materials may be appreciably greater or lesser than the variation of air temperature and is influenced by the condition of exposure and the rate at which the materials composing the structure absorb or radiate heat. This difference in temperature variations of the material and air shall be given due consideration. The effect of differential temperature within an element or member, due to part exposure to direct sunlight shall also be considered.

9.4.4 The coefficient of thermal expansion for steel is as given in **8.2.4.1**(e).

9.5 Load Combinations

9.5.1 Load combinations for design purposes shall be those that produce maximum forces and effects and consequently maximum stresses and deformations. The following combination of loads with appropriate partial safety factors (*see* Table 4) may be considered:

a) Dead load + Imposed load,

b) Dead load + Imposed load + Wind or Earthquake load,

c) Dead load + Wind or Earthquake load, and

d) Dead load + Erection load.

NOTE — In the case of structures supporting cranes, imposed loads shall include the crane effects as given in **9.5.4**.

9.5.2 Wind load and earthquake loads shall not be assumed to act simultaneously. The effect of each shall be considered separately.

9.5.3 The effect of cranes to be considered under imposed loads shall include the vertical loads, eccentricity effects induced by the vertical loads, impact factors, lateral (surge) and the longitudinal (horizontal) thrusts, not acting simultaneously, across and along the crane rail, respectively [*see* 3 of Part 6 'Structural Design, Section 1 Loads, Forces and Effects' of the Code].

9.5.4 The crane loads and their combinations to be considered shall be as indicated by the customer. In the absence of any specific indications, the load combinations shall be in accordance with the provisions in 3 of Part 6 'Structural Design, Section 1 Loads, Forces and Effects' of the Code or as given below:

a) Vertical loads with full impact from one loaded crane or two cranes in case of tandem operation, together with vertical loads without impact from as many loaded cranes as may be positioned for maximum effect, along with maximum horizontal thrust from one crane only or two in case of tandem operation;

b) Loads as specified in **9.5.4** (a), subject to cranes in maximum of any two bays of the building cross-section shall be considered for multi-bay multi-crane gantries;

c) The longitudinal thrust on a crane track rail shall be considered for a maximum of two loaded cranes on the track; and

d) Lateral thrust (surge) and longitudinal thrust acting across and along the crane rail, respectively shall be assumed not to act simultaneously. The effect of each force, shall however be investigated separately.

9.5.5 While investigating the effect of earthquake forces, the resulting effect from dead loads of all cranes parked in each bay, positioned to cause maximum effect shall be considered.

9.5.6 The crane runway girders supporting bumpers shall be checked for bumper impact loads also, as specified by the manufacturers.

9.5.7 Stresses developed due to secondary effects such as handling; erection, temperature and settlement of foundations, if any, shall be appropriately added to the stresses calculated from the combination of loads stated in **9.5.1**, with appropriate partial safety factors.

9.6 Geometrical Properties

9.6.1 *General*

The geometrical properties of the gross and the effective cross-sections of a member or part thereof, shall be calculated on the following basis:

a) The properties of the gross cross-section shall be calculated from the specified size of the

member or part thereof or read from appropriate table.

b) The properties of the effective cross-section shall be calculated by deducting from the area of the gross cross-section, the following:

1) The sectional area in excess of effective plate width, in case of slender sections (*see* **9.7.2**).

2) The sectional areas of all holes in the section except for parts in compression. In case of punched holes, hole size 2 mm in excess of the actual diameter may be deducted.

9.7 Classification of Cross-Sections

9.7.1 Plate elements of a cross-section may buckle locally due to compressive stresses. The local buckling can be avoided before the limit state is achieved by limiting the width to thickness ratio of each element of a cross-section subjected to compression due to axial force, moment or shear.

9.7.1.1 When plastic analysis is used, the members shall be capable of forming plastic hinges with sufficient rotation capacity (ductility) without local buckling, to enable the redistribution of bending moment required before formation of the failure mechanism.

9.7.1.2 When elastic analysis is used, the member shall be capable of developing the yield stress under compression without local buckling.

9.7.2 On basis of the above, four classes of sections are defined as follows:

a) *Class 1 (Plastic)* — Cross-sections, which can develop plastic hinges and have the rotation capacity required for failure of the structure by formation of plastic mechanism. The width to thickness ratio of plate elements shall be less than that specified under Class 1 (Plastic), in Table 2.

b) *Class 2 (Compact)* — Cross-sections, which can develop plastic moment of resistance, but have inadequate plastic hinge rotation capacity for formation of plastic mechanism, due to local buckling. The width to thickness ratio of plate elements shall be less than that specified under Class 2 (Compact), but greater than that specified under Class 1 (Plastic), in Table 2.

c) *Class 3 (Semi-compact)* — Cross-sections, in which the extreme fiber in compression can reach yield stress, but cannot develop the plastic moment of resistance, due to local buckling. The width to thickness ratio of plate elements shall be less than that specified under Class 3 (Semi-compact), but greater than that specified under Class 2 (Compact), in Table 2.

d) *Class 4 (Slender)* — Cross-sections in which the elements buckle locally even before reaching yield stress. The width to thickness ratio of plate elements shall be greater than that specified under Class 3 (Semi-compact), in Table 2. In such cases, the effective sections for design shall be calculated either by following the provisions of good practice [6-6(34)] to account for the post-local-buckling strength or by conservatively deducting width of the compression plate element in excess of the semi-compact section limit (*see* Fig. 2B and Fig. 2C).

The design of slender web elements in flexural members may be done as given in **14.2.1.1** for flexure and **14.4.2.2** for shear.

When different elements of a cross-section fall under different classes, the section shall be classified as governed by the most critical element.

The maximum value of limiting width to thickness ratios of elements for different classifications of sections are given in Fig. 2A. The effective section in case of class 4 (slender elements) may be conservatively taken as shown in Fig. 2B and Fig. 2C.

9.7.3 *Types of Elements*

a) *Internal elements* — These are elements attached along both longitudinal edges to other elements or to longitudinal stiffeners connected at suitable intervals to transverse stiffeners; for example web of I-section and flanges and web of box section.

b) *Outside elements or outstands* — These are elements attached along only one of the longitudinal edges to an adjacent element, the other edge being free to displace out of plane, for example flange overhang of an I-section, stem of T-section and legs of an angle section.

c) *Tapered elements* — These may be treated as flat elements having average thickness as defined in accepted standard [6-6(35)].

The design of slender compression element (Class 4) considering the strength beyond elastic local buckling of element is outside the scope of this section. Reference may be made to in good practice [6-6(34)] for such design provisions. The design of slender web elements may be made as given in **14.2.1.1** for flexure and **14.4.2.2** for shear.

9.7.4 *Compound Elements in Built-up Section* (*see* Fig. 2)

In case of compound elements consisting of two or more elements bolted or welded together, the limiting width

to thickness ratios as in Table 2 should be considered on basis of the following:

a) Outstanding width of compound element (b_c) to its own thickness.

b) The internal width of each added plate between the lines of welds or fasteners connecting it to the original section to its own thickness.

c) Any outstand of the added plates beyond the line of welds or fasteners connecting it to original section to its own thickness.

9.8 Maximum Effective Slenderness Ratio

9.8.1 The maximum effective slenderness ratio. KL/r; values of a beam, strut or tension member shall not exceed those given in Table 3. 'KL' is the effective length of the member and 'r' is appropriate radius of

Table 2 Limiting Width to Thickness Ratio

(*Clauses* 9.7.2 *and* 9.7.4)

Sl No.	Compression Element			Ratio	Class of Section		
					Class 1 Plastic	Class 2 Compact	Class-3 Semi-Compact
(1)	(2)			(3)	(4)	(5)	(6)
i)	Outstanding element of compression flange	Rolled section		b/t_f	9.4ε	10.5ε	15.7ε
		Welded section		b/t_f	8.4ε	9.4ε	13.6ε
ii)	Internal element of compression flange	Compression due to bending		b/t_f	29.3ε	33.5ε	42ε
		Axial compression		b/t_f	42ε	42ε	
iii)	Web of an I, H or box section	Neutral axis at mid-depth		d/t_w	84ε	105ε	126ε
		Generally	If r_1 is negative	d/t_w	$\frac{84\varepsilon}{1+r_1}$ but ≥ 42ε	$\frac{105.0\varepsilon}{1+r_1}$	$\frac{126.0\varepsilon}{1+2\ r_2}$ but ≥ 42ε
			If r_1 is positive	d/t_w		$\frac{105.0\varepsilon}{1+1.5r_1}$ but ≥ 42ε	
		Axial compression		d/t_w	42ε	42ε	42ε
iv)	Web of a channel			d/t_w	42ε	42ε	42ε
v)	Angle, compression due to bending (Both criteria should be satisfied)			b/t d/t	9.4ε 9.4 ε	10.5ε 10.5ε	15.7ε 15.7ε
vi)	Single angle, or double angles with the components separated, axial compression (All three criteria should be satisfied)			b/t d/t $(b+d)/t$	15.7ε 15.7ε 25ε	15.7ε 15.7ε 25ε	15.7ε 15.7ε 25ε
vii)	Outstanding leg of an angle in contact back-to-back in a double angle member			d/t	9.4ε	10.5ε	15.7ε
viii)	Outstanding leg of an angle with its back in continuous contact with another component			d/t	9.4ε	10.5ε	15.7ε
ix)	Stem of a T-section, rolled or cut from a rolled I-or H-section			d/t	8.4ε	9.4ε	18.9ε
x)	Circular hollow tube, including welded tube subjected to: a) moment			D/t	$42\varepsilon^2$	$52\varepsilon^2$	$146\varepsilon^2$
	b) axial compression			D/t	Not applicable		$88\varepsilon^2$

NOTES

1 Elements which exceed semi-compact limits are to be taken as of slender Cross-section

2 $\varepsilon = (250 / f_y)^{1/2}$

3 Webs shall be checked for shear buckling in accordance with **14.4.2** when $d/t > 67\varepsilon$. Where, b is the width of the element may be taken as clear distance between lateral supports or between lateral support and free edge, as appropriate, t is the thickness of element, d is the depth of the web. D is the outer diameter of the element (*see* Fig 2, **9.7.3** and **9.7.4**).

4 Different elements of a cross-section can be in different classes. In such cases the section is classified based on the least favourable classification.

5 The stress ratio r_1 and r_2 are defined as:

$$r_1 = \frac{\text{Actual average axial stress (negative, if tensile)}}{\text{Design compressive stress of web alone}}$$

$$r_2 = \frac{\text{Actual average axial stress (negative, if tensile)}}{\text{Design compressive stress of overall section}}$$

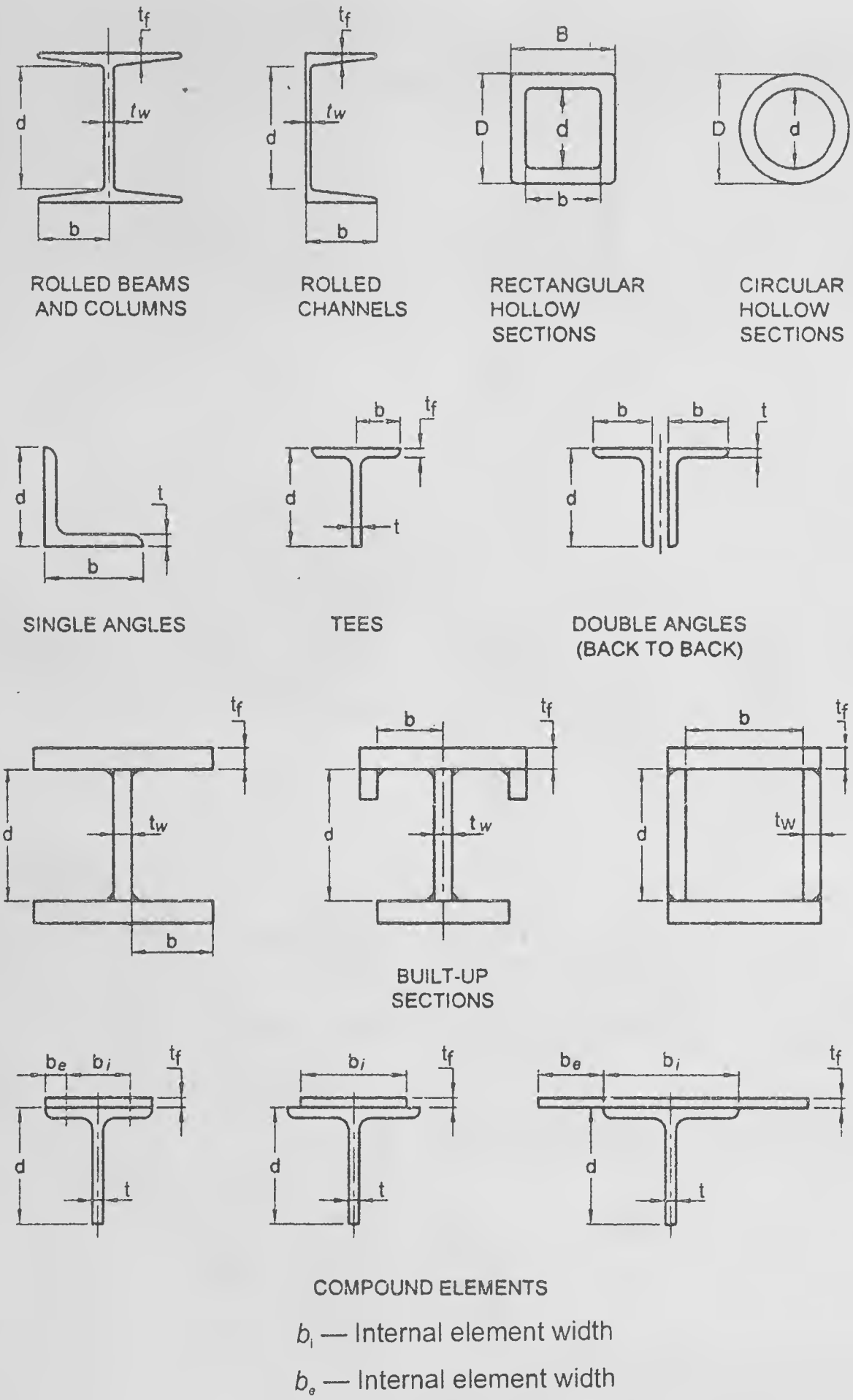

b_i — Internal element width

b_e — Internal element width

2A DIMENSIONS OF SECTIONS

FIG. 2 CLASSIFICATION OF SECTIONS — (*Continued*)

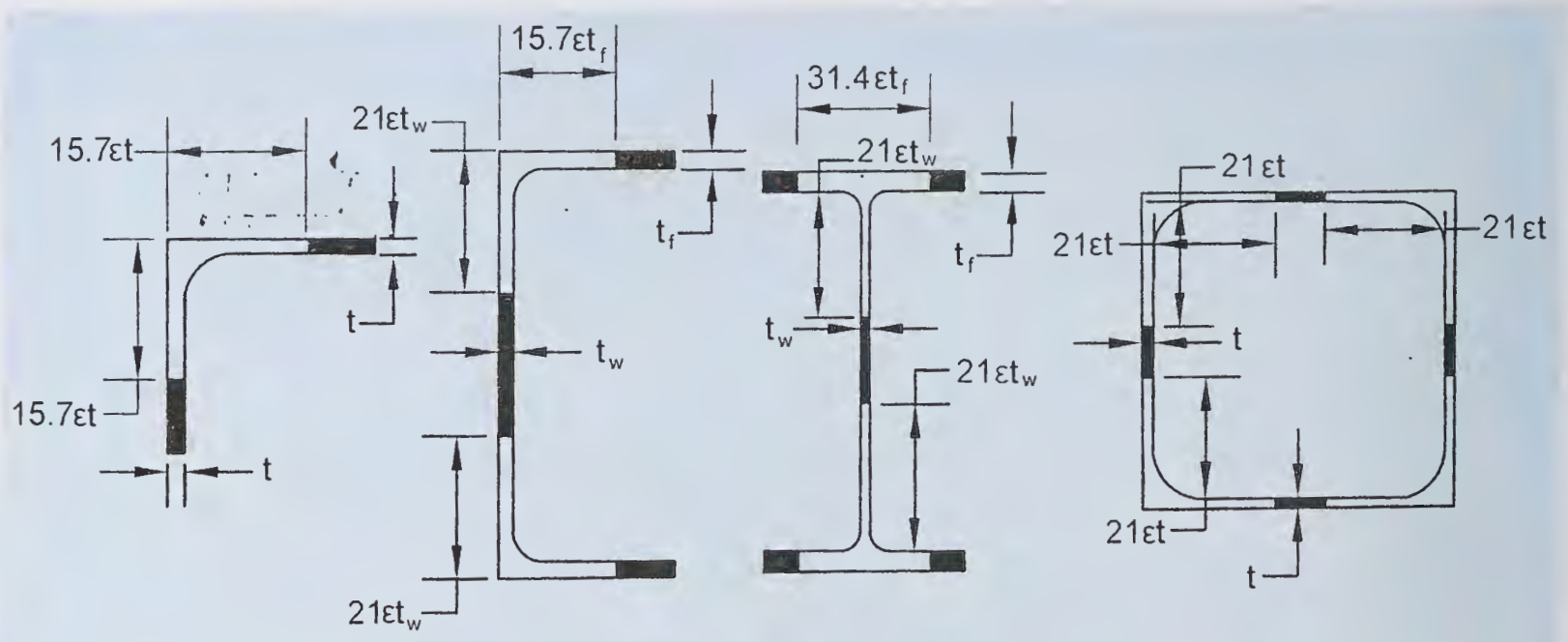

2B EFFECTIVE SECTION OF SLENDER MEMBERS UNDER COMPRESSION, PURE

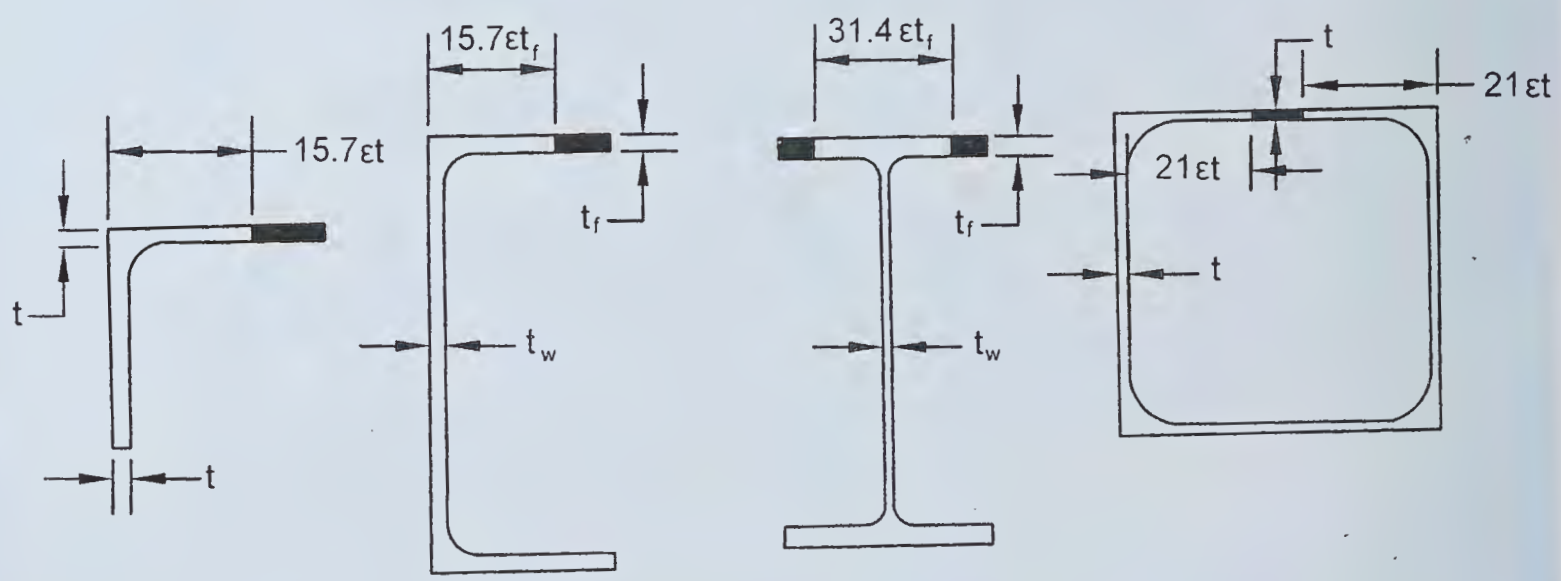

2C EFFECTIVE SECTION OF SLENDER MEMBERS UNDER COMPRESSION, FLEXURAL

FIG. 2 CLASSIFICATION OF SECTIONS

gyration based on the effective section as defined in **9.6.1**.

9.9 Resistance to Horizontal Forces

9.9.1 In designing the steel frame work of a building, provision shall be made (by adequate moment connections or by a system of bracing) to effectively transmit to the foundations all the horizontal forces, giving due allowance for the stiffening effect of the walls and floors, where applicable.

9.9.2 When the walls, or walls and floors and/or roofs are capable of effectively transmitting all the horizontal forces directly to the foundations, the structural steel framework may be designed without considering the effect of wind or earthquake.

9.9.3 Wind and earthquake forces are reversible and therefore call for rigidity and strength under force reversal in both longitudinal and transverse directions. To resist torsional effects of wind and earthquake forces, bracings in plan should be provided and integrally connected with the longitudinal and transverse bracings, to impart adequate torsional resistance to the structure.

9.9.3.1 In shed type steel mill buildings, adequate bracings shall be provided to transfer the wind or earthquake loads from their points of action to the appropriate supporting members. Where the connections to the interior columns or frames are designed such that the wind or earthquake loads will not be transferred to the interior columns, the exterior columns or frames shall be designed to resist the total wind or earthquake loads. Where the connections to the interior columns and frames are designed such that the wind or earthquake effects are transferred to the interior columns also, and where adequate rigid diaphragm action can be mobilized as in the case of the cast-in place RC slab, both exterior and interior

Table 3 Maximum Values of Effective Slenderness Ratios

(*Clause* 9.8.1)

Sl No.	Member	Maximum Effective Slenderness Ratio *KL/r*
(1)	(2)	(3)
i)	A member carrying compressive loads resulting from dead loads and imposed loads	180
ii)	A tension member in which a reversal of direct stress occurs due to loads other than wind or seismic forces	180
iii)	A member subjected to compression forces resulting only from combination with wind/earthquake actions, provided the deformation of such member does not adversely affect the stress in any part of the structure	250
iv)	Compression flange of a beam against lateral torsional buckling	300
v)	A member normally acting as a tie in a roof truss or a bracing system not considered effective when subject to possible reversal of stress into compression resulting from the action of wind or earthquake forces[1)]	350
vi)	Members always under tension[1)] (other than pre-tensioned members)	400

[1)] Tension members, such as bracings, pre-tensioned to avoid sag, need not satisfy the maximum slenderness ratio limits.

columns and frames may be designed on the assumption that the wind or earthquake load is divided among them in proportion to their relative stiffness. Columns also should be designed to withstand the net uplifting effect caused by excessive wind or earthquake. Additional axial forces arising in adjacent columns due to the vertical component of bracings or due to frame action shall also be accounted for.

9.9.3.2 Earthquake forces are proportional to the seismic mass as defined in **5** of Part 6 'Structural Design, Section 1 Loads, Forces and Effects' of the Code. Earthquake forces should be applied at the centre of gravity of all such components of mass and their transfer to the foundation should be ensured. Other construction details, stipulated in good practice [6-6(36)] should also be followed.

9.9.3.3 In buildings where high-speed travelling cranes are supported or where a building or structure is otherwise subjected to vibration or sway, triangulated bracing or rigid portal systems shall be provided to reduce the vibration or sway to an acceptable minimum.

9.9.4 *Foundations*

The foundations of a building or other structures shall be designed to provide the rigidity and strength that has been assumed in the analysis and design of the superstructure.

9.9.5 *Eccentrically Placed Loads*

Where a wall, or other gravity load, is placed eccentrically upon the flange of a supporting steel beam, the beam and its connections shall be designed for torsion, unless the beam is restrained laterally in such a way as to prevent the twisting of the beam.

9.10 Expansion Joints

Expansion joints in case of low-rise buildings shall comply with **9.10.1** to **9.10.4**. For requirement of expansion joints in high-rise buildings, specialist literature shall be referred to.

9.10.1 In view of the large number of factors involved in deciding the location, spacing and nature of expansion joints, the decision regarding provision of expansion joints shall be left to the discretion of the designer.

9.10.2 Structures in which marked changes in plan dimensions take place abruptly, shall be provided with expansion joints at the section where such changes occur. Expansion joints shall be so provided that the necessary movement occurs with minimum resistance at the joint. The gap at the expansion joint should be such that,

a) it accommodates the expected expansion/contraction due to seasonal and diurnal variation of temperature; and

b) it avoids pounding of adjacent units under earthquake. The structure adjacent to the joint should preferably be supported on separate columns but not necessarily on separate foundations.

9.10.3 The details as to the length of a structure where expansion joints have to be provided may be determined after taking into consideration various factors such as temperature, exposure to weather and structural design. The provisions in **9.10.3.1** to **9.10.3.3** are given as general guidance.

9.10.3.1 If one bay of longitudinal bracing is provided at the centre of the building or building section, the length of the building section may be restricted to 180 m in case of covered buildings and 120 m in case of open gantries (*see* Fig. 3).

9.10.3.2 If more than one bay of longitudinal bracing is provided near the centre of the building/section, the maximum centre line distance between the two lines of bracing may be restricted to 50 m for covered buildings (and 30 m for open gantries) and the maximum distance between the centre of the bracing to the nearest expansion joint/end of building or section may be restricted to 90 m (60 m in case of open gantries). The maximum length of the building section thus may be

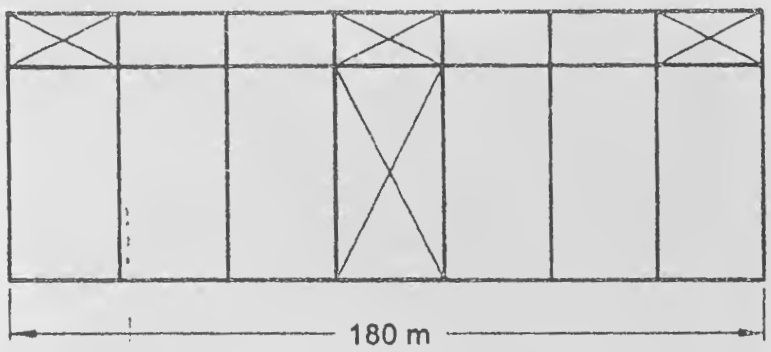

END OF COVERED BUILDING/SECTION

FIG. 3 MAXIMUM LENGTH OF BUILDING WITH ONE BAY OF BRACING

restricted to 230 m for covered buildings (150 m for open gantries). Beyond this, suitable expansion joints shall be provided (*see* Fig. 4).

9.10.3.3 The maximum width of the covered building section should preferably be restricted to 150 m beyond which suitable provisions for the expansion joint may be made.

9.10.4 When the provisions of these sections are met for a building or open structure made only of steel frame with elastic steel claddings, the stress analysis due to temperature is not required. However, for buildings with steel concrete composite construction, specialist literature may be referred to decide on thermal stress design.

SECTION 6(d) METHODS OF STRUCTURAL ANALYSIS

10 METHODS OF STRUCTURAL ANALYSIS

10.1 Methods of Determining Action Effects

10.1.1 *General*

For the purpose of complying with the requirements of the limit states of stability, strength and serviceability specified in Section 6(e), effects of design actions on a structure and its members and connections, shall be determined by structural analysis using the assumptions of **10.2** and **10.3** and one of the following methods of analysis:

a) Elastic analysis in accordance with **10.4**,
b) Plastic analysis in accordance with **10.5**,
c) Advanced analysis in accordance with Annex A, or
d) Dynamic analysis in accordance with **5** of Part 6 'Structural Design, Section 1 Loads, Forces and Effects' of the Code.

The design action effects for design basis earthquake loads shall be obtained only by an elastic analysis. The maximum credible earthquake loads shall be assumed to correspond to the load at which significant plastic hinges are formed in the structure and the corresponding effects shall be obtained by plastic or advanced analysis. More information on analysis and design to resist earthquake is given in Section 6(n) and **5** of Part 6 'Structural Design, Section 1 Loads, Forces and Effects' of the Code.

10.1.2 *Non-Sway and Sway Frames*

For the purpose of analysis and design, the structural frames are classified as non-sway and sway frames as given below:

a) *Non-sway frame* — One in which the transverse displacement of one end of the member relative to the other end is effectively prevented. This applies to triangulated frames and trusses or to frames where in-plane stiffness is provided by bracings, or by shear walls, or by floor slabs and roof decks secured horizontally to walls or to bracing systems parallel to the plane of loading and bending of the frame.
b) *Sway frame* — One in which the transverse displacement of one end of the member relative to the other end is not effectively prevented. Such members and frames occur in structures which depend on flexural action

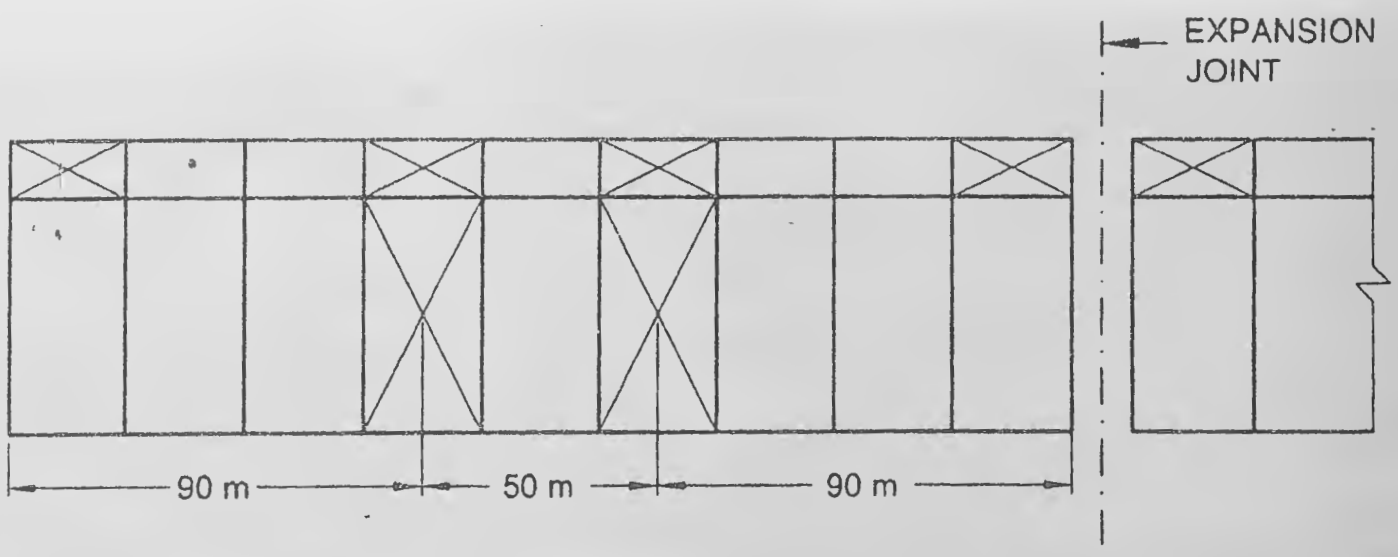

FIG. 4 MAXIMUM LENGTH OF COVERED BUILDING/SECTION WITH TWO BAYS OF BRACINGS

of members to resist lateral loads and sway, as in moment resisting frames.

c) A rigid jointed multi-storey frame may be considered as a non-sway frame if in every individual storey, the deflection d, over a storey height h_s due to the notional horizontal loading given in **10.3.6** satisfies the following criteria:

1) For clad frames, when the stiffening effect of the cladding is not taken into account in the deflection calculations:

$$\delta \leq \frac{h_s}{2\ 000}$$

2) For unclad frame or clad frames, when the stiffening effect of the cladding is taken into account in the deflection calculations:

$$\delta \leq \frac{h_s}{4\ 000}$$

3) A frame, which when analysed considering all the lateral supporting system does not comply with the above criteria, should be classified as a sway frame, even if it is braced or otherwise laterally stiffened.

10.2 Forms of Construction Assumed for Structural Analysis

10.2.1 The effects of design action in the members and connections of a structure shall be determined by assuming singly or in combination of the following forms of construction (*see* **16.6.1**).

10.2.1.1 *Rigid construction*

In rigid construction, the connections between members (beam and column) at their junction shall be assumed to have sufficient rigidity to hold the original angles between the members connected at a joint unchanged under loading.

10.2.1.2 *Semi-rigid construction*

In semi-rigid construction, the connections between members (beam and column) at their junction may not have sufficient rigidity to hold the original angles between the members at a joint unchanged, but shall be assumed to have the capacity to furnish a dependable and known degree of flexural restraint. The relationship between the degree of flexural restraint and the level of the load effects shall be established by any rational method or based on test results (*see* Annex E).

10.2.1.3 *Simple construction*

In simple construction, the connections between members (beam and column) at their junction will not resist any appreciable moment and shall be assumed to be hinged.

10.2.2 *Design of connections*

The design of all connections shall be consistent with the form of construction, and the behaviour of the connections shall not adversely affect any other part of the structure beyond what is allowed for in design. Connections shall be designed in accordance with Section 6(k).

10.3 Assumptions in Analysis

10.3.1 The structure shall be analysed in its entirety except as follows:

a) Regular building structures, with orthogonal frames in plan, may be analysed as a series of parallel two-dimensional sub-structures (part of a structure), the analysis being carried out in each of the two directions, at right angles to each other, except when there is significant load redistribution between the sub-structures (part of a structure). For earthquake loading three dimensional analysis may be necessary to account for effects of torsion and also for multi-component earthquake forces (*see* 5 of Part 6 'Structural Design, Section 1 Loads, Forces and Effects' of the Code).

b) For vertical loading in a multi-storey building structure, provided with bracing or shear walls to resist all lateral forces, each level thereof, together with the columns immediately above and below, may be considered as a substructure, the columns being assumed fixed at the ends remote from the level under consideration.

c) Where beams at a floor level in a multi-bay building structure are considered as a substructure (part of a structure), the bending moment at the support of the beam due to gravity loads may be determined based on the assumption that the beam is fixed at the far end support, one span away from the span under consideration, provided that the floor beam is continuous beyond that support point.

10.3.2 *Span Length*

The span length of a flexural member in a continuous frame system shall be taken as the centre-to-centre distance between the supports.

10.3.3 *Arrangements of Imposed Loads in Buildings*

For building structures, the various arrangements of imposed loads considered for the analysis, shall include at least the following:

a) Where the loading pattern is fixed, the arrangement concerned.

b) Where the imposed load is variable and not greater than three-quarters of the dead load, the imposed load may be taken to be acting on all spans.

c) Where the imposed load is variable and exceeds three-quarters of the dead load, arrangements of imposed load acting on the floor under consideration shall include the following cases:

   1) Imposed load on alternate spans,
   2) Imposed load on two adjacent spans, and
   3) Imposed load on all the spans.

10.3.4 *Base Stiffness*

In the analysis of all structures the appropriate base stiffness about the axis under consideration shall be used. In the absence of the knowledge of the pedestal and foundation stiffness, the following may be assumed:

a) When the column is rigidly connected to a suitable foundation, the stiffness of the pedestal shall be taken as the stiffness of the column above base plate. However, in case of very stiff pedestals and foundations the column may be assumed as fixed at base.

b) When the column is nominally connected to the foundation, a pedestal stiffness of 10 percent of the column stiffness may be assumed.

c) When an actual pin or rocker is provided in the connection between the steel column and pedestal, the column is assumed as hinged at base and the pedestal and foundation may be appropriately designed for the reactions from the column.

d) In case of (a) and (b), the bottom of the pedestal shall be assumed to have the following boundary condition in the absence of any detailed procedure based on theory or tests:

   1) When the foundation consist of a group of piles with a pile cap, raft foundation or an isolated footing resting on rock or very hard soil, the pedestal shall be assumed to be fixed at the level of the bottom of footing or at the top of pile cap.
   2) When the foundation consists of an isolated footing resting on other soils, pedestal shall be assumed to be hinged at the level of the bottom of footing.
   3) When the pedestal is supported by a single pile, which is laterally surrounded by soil providing passive resistance, the pile shall be assumed to be fixed at a depth of 5 times the diameter of the pile below the ground level in case of compact ground or the top level of compact soil in case of poor soil overlying compact soil.
   4) When the column is founded into rock, it may be assumed to be fixed at the interface of the column and rock.

10.3.5 *Simple Construction*

Bending members may be assumed to have their ends connected for shear only and to be free to rotate. In triangulated structures, axial forces may be determined by assuming that all members are pin connected. The eccentricity for stanchion and column shall be assumed in accordance with **13.3.3**.

10.3.6 *Notional Horizontal Loads*

To analyse a frame subjected to gravity loads, considering the sway stability of the frame, notional horizontal forces should be applied. These notional horizontal forces account for practical imperfections and should be taken at each level as being equal to 0.5 percent of factored dead load plus vertical imposed loads applied at that level. The notional load should not be applied along with other lateral loads such as wind and earthquake loads in the analysis.

10.3.6.1 The notional forces should be applied on the whole structure, in both orthogonal directions, in one direction at a time, at roof and all floor levels or their equivalent. They should be taken as acting simultaneously with factored gravity loads.

10.3.6.2 The notional force should not be,

a) applied when considering overturning or overall instability;
b) combined with other horizontal (lateral) loads;
c) combined with temperature effects, and
d) taken to contribute to the net shear on the foundation.

10.3.6.3 The sway effect using notional load under gantry load case need not be considered if the ratio of height to lateral width of the building is less than unity.

10.4 Elastic Analysis

10.4.1 *Assumptions*

Individual members shall be assumed to remain elastic under the action of the factored design loads for all limit states.

The effect of haunching or any variation of the cross-section along the axis of a member shall be considered, and where significant, shall be taken into account in the determination of the member stiffness.

10.4.2 *First-Order Elastic Analysis*

10.4.2.1 In a first-order elastic analysis, the equilibrium of the frame in the undeformed geometry is considered, the changes in the geometry of the frame due to the loading are not accounted for, and changes in the effective stiffness of the members due to axial force are neglected. The effects of these on the first-order bending moments shall be allowed for by using one of the methods of moment amplification of **10.4.3.2** or **10.4.3.3** as appropriate. Where the moment amplification factor K_y, K_z, calculated in accordance with **10.4.3.2** or **10.4.3.3** as appropriate, is greater than 1.4, a second-order elastic analysis in accordance with Annex A shall be carried out.

10.4.3 *Second-Order Elastic Analysis*

10.4.3.1 The analysis shall allow for the effects of the design loads acting on the structure and its members in their displaced and deformed configuration. These second-order effects shall be taken into account by using either:

a) A first-order elastic analysis with moment amplification in accordance with **10.4.2**, provided the moment amplification factors, K_y and K_z are not greater than 1.4; or

b) A second-order elastic analysis in accordance with Annex A.

10.4.3.2 *Moment amplification for members in non-sway frames*

For a member with zero axial compression or a member subject to axial tension, the design bending moment is that obtained from the first-order analysis for factored loads, without any amplification.

For a braced member with a design axial compressive force P_d as determined by the first-order analysis, the design bending moment shall be calculated considering moment amplification as in **15.3.2.2**.

10.4.3.3 *Moment amplification for members in sway frames*

The design bending moment shall be calculated as the product of moment amplification factor [*see* **15.3.2.2** (K_y, K_z)] and the moment obtained from the first-order analysis of the sway frame, unless analysis considering second order effects is carried out (*see* **10.4.3**).

10.4.3.4 The calculated bending moments from the first order elastic analysis may be modified by redistribution up to 15 percent of the peak calculated moment of the member under factored load, provided that,

a) the internal forces and moments in the members of the frame are in equilibrium with applied loads.

b) all the members in which the moments are reduced shall belong to plastic or compact section classification (*see* **9.7**).

10.5 Plastic Analysis

10.5.1 *Application*

The effects of design action throughout or on part of a structure may be determined by a plastic analysis, provided that the requirements of **10.5.2** are met. The distribution of design action effects shall satisfy equilibrium and the boundary conditions.

10.5.2 *Requirements*

When a plastic method of analysis is used, all of the following conditions shall be satisfied, unless adequate ductility of the structure and plastic rotation capacity of its members and connections are established for the design loading conditions by other means of evaluation:

a) The yield stress of the grade of the steel used shall not exceed 450 MPa.

b) The stress-strain characteristics of the steel shall not be significantly different from those obtained for steels complying with the accepted standard [6-6(6)] or equivalent and shall be such as to ensure complete plastic moment redistribution. The stress-strain diagram shall have a plateau at the yield stress, extending for at least six times the yield strain. The ratio of the tensile strength to the yield stress specified for the grade of the steel shall not be less than 1.2. The elongation on a gauge length complying with the accepted standard [6-6(6)] shall not be less than 15 percent; and the steel shall exhibit strain-hardening capability. Steels conforming to the accepted standard [6-6(6)] shall be deemed to satisfy the above requirements.

c) The members used shall be hot-rolled or fabricated using hot-rolled plates and sections.

d) The cross-section of members not containing plastic hinges should be at least that of compact section (*see* **9.7.2**), unless the members meet the strength requirements from elastic analysis.

e) Where plastic hinges occur in a member, the proportions of its Cross-section should not exceed the limiting values for plastic section given in **9.7.2**.

f) The cross-section should be symmetrical about its axis perpendicular to the axis of the plastic hinge rotation.

g) The members shall not be subject to impact loading, requiring fracture assessment or

fluctuating loading, requiring a fatigue assessment [*see* Section 6(p)].

10.5.2.1 *Restraints*

If practicable, torsional restraint (against lateral buckling) should be provided at all plastic hinge locations. Where not feasible, the restraint should be provided within a distance of $D/2$ of the plastic hinge location, where D is the total depth of section.

The torsional restraint requirement at a section as above, need not be met at the last plastic hinge to form, provided it can be clearly identified.

Within a member containing a plastic hinge, the maximum distance L_m from the restraint at the plastic hinge to an adjacent restraint should be calculated by any rational method or the conservative method given below, so as to prevent lateral buckling.

Conservatively L_m (in mm) may be taken as:

$$L_m \leq \frac{38\ r_y}{\left[\frac{f_c}{130} + \left(\frac{f_y}{250}\right)^2 \left(\frac{x_t}{40}\right)^2\right]^{1/2}}$$

where

f_c = actual compressive stress on the cross-section due to axial load, in N/mm^2,

f_y = yield stress, in N/mm^2;

r_y = radius of gyration about the minor axis, in mm;

x_t = torsional index, $x_t = 1.132\ (AI_w/I_yI_t)0.5$;

A = area of cross-section; and

I_w, I_y, I_t = warping constant, second moment of the cross-section about the minor axes and St. Venant's torsion constant, respectively.

Where the member has unequal flanges, r_y should be taken as the lesser of the values of the compression flange only or the whole section.

Where the cross-section of the member varies within the length L_m, the maximum value of r_y and the minimum value of x_t should be used.

The spacing of restraints to member lengths not containing a plastic hinge should satisfy the recommendations of section on lateral buckling strength of beams (*see* **14.2.2**). Where the restraints are placed at the limiting distance L_m, no further checks are required.

10.5.2.2 *Stiffeners at plastic hinge locations*

Web stiffeners should be provided where a concentrated load, which exceeds 10 percent of the shear capacity of the member, is applied within $D/2$ of a plastic hinge location, (*see* **14.2.1.2**). The stiffener should be provided within a distance of half the depth of the member on either side of the hinge location and be designed to carry the applied load in accordance with **14.7.4**. If the stiffeners are flat plates, the outstand width to the thickness ratio, b/t, should not exceed the values given in the plastic section (*see* **9.7** and Table 2). Where other sections are used, the ratio $\left(\frac{I_{so}}{I_t}\right)^{1/2}$, should not exceed the values given for plastic section (for simple outstand, as in **9.7**);

where

I_{so} = second moment of area of the stiffener about the face of the element perpendicular to the web; and

I_t = St. Venant's torsion constant of the stiffener.

10.5.2.3 The frame shall be adequately supported against sway and out-of-plane buckling, by bracings, moment resisting frame or an independent system such as shear wall.

10.5.2.4 *Fabrication restriction*

Within a length equal to the member depth, on either side of a plastic hinge location, the following restrictions should be applied to the tension flange and noted in the design drawings. Holes, if required, should be drilled or else punched 2 mm undersize and reamed. All sheared or hand flame cut edges should be finished smooth by grinding, chipping or planning.

10.5.3 *Assumptions in Analysis*

The design action effects shall be determined using a rigid-plastic analysis.

It shall be permissible to assume full strength or partial strength connections, provided the capacities of these are used in the analysis, and provided that,

a) In a full strength connection, the moment capacity of the connection shall be not less than that of the member being connected;

b) In a partial strength connection, the moment capacity of the connection may be less than that of the member being connected: and

c) In both cases the behavior of the connection shall be such as to allow all plastic hinges necessary for the collapse mechanism to develop, and shall be such that the required plastic hinge rotation does not exceed the rotation capacity at any of the plastic hinges in the collapse mechanism.

In the case of building structures, it is not normally necessary to consider the effect of alternating plasticity.

10.5.4 *Second-Order Elastic Analysis*

Any second-order effects of the loads acting on the structure in its deformed configuration may be neglected, provided the following are satisfied:

a) For clad frames, provided the stiffening effects of masonry infill wall panels or diaphragms of profiled wall panel is not taken into account, and where elastic buckling load factor, λ_{cr} (*see* **10.6**) satisfies $\lambda_{cr}/\lambda_p \geq 10$.

   If $10 > \lambda_{cr}/\lambda_p \geq 4.6$ the second-order effects may be considered by amplifying the design load effects obtained from plastic analysis by a factor $\delta_p = \{0.9\ \lambda_{cr} /(\lambda_{cr}-1)\}$.

   If $\lambda_{cr}/\lambda_p < 4.6$, second-order elasto-plastic analysis or second order elastic analysis (*see* **10.4.3**) is to be carried out.

b) for unclad frames or for clad frames where the stiffening effects of masonry infill or diaphragms of profiled wall panel is taken into account, where elastic buckling load factor, λ_{cr} (*see* **10.6**) satisfies $\lambda_{cr}/\lambda_p \geq 20$.

   If $20 > \lambda_{cr}/\lambda_p \geq 5.75$ the second-order effects may be considered by amplifying the design load effects obtained from plastic analysis by a factor $\delta_p = \{0.9\ \lambda_{cr} /(\lambda_{cr}-1)\}$.

   If $\lambda_{cr}/\lambda_p < 5.75$, second-order elasto-plastic analysis or second-order elastic analysis (*see* **10.4.3**) shall be carried out.

10.6 Frame Buckling Analysis

10.6.1 The elastic buckling load factor (λ_{cr}) shall be the ratio of the elastic buckling load set of the frame to the design load set for the frame, and shall be determined in accordance with **10.6.2**.

NOTE — The value of λ_{cr} depends on the load set and has to be evaluated for each possible set of load combination.

10.6.2 *In-Plane frame buckling*

The elastic buckling load factor (λ_{cr}) of a rigid-jointed frame shall be determined by using:

a) One of the approximate methods of **10.6.2.1** and **10.6.2.2**, or

b) A rational elastic buckling analysis of the whole frame.

10.6.2.1 *Regular non-sway frames* (*see* **10.1.2**)

In a rectangular non-sway frame with regular loading and negligible axial forces in the beams, the Euler buckling stress f_{cc}, for each column shall be determined in accordance with **13.1.2.1**. The elastic buckling load factor (λ_{cr}) for the whole frame shall be taken as the lowest of the ratio of (f_{cc}/f_{cd}) for all the columns, where f_{cd} is the axial compressive stress in the column from the factored load analysis.

10.6.2.2 *Regular sway frames*

In a rectangular sway frame with regular loading and negligible axial forces in the beams, the buckling load, P_{cc}, for each column shall be determined as $P_{cc} = A f_{cc}$ where f_{cc} is the elastic buckling stress of the column in the plane of frame, obtained in accordance with **13.1.2.1**. The elastic buckling load factor λ_{cr}, for the whole frame shall be taken as the lowest of all the ratios, λ_{scr}, calculated for each storey of the building, as given below:

$$\lambda_{scr} = \frac{\sum (P_{cc}/L)}{\sum (P/L)}$$

where

P = member axial force from the factored load analysis, with tension taken as negative, and

L = column length and the summation includes all columns in the plane frame within a storey.

SECTION 6(e) LIMIT STATE DESIGN

11 LIMIT STATE DESIGN

11.1 Basis for Design

11.1.1 In the limit state design method, the structure shall be designed to withstand safely all loads likely to act on it throughout its life. It shall not suffer total collapse under accidental loads such as from explosions or impact or due to consequences of human error to an extent beyond the local damages. The objective of the design is to achieve a structure that will remain fit for use during its life with acceptable target reliability. In other words, the probability of a limit state being reached during its lifetime should be very low. The acceptable limit for the safety and serviceability requirements before failure occurs is called a limit state. In general, the structure shall be designed on the basis of the most critical limit state and shall be checked for other limit states.

11.1.2 Steel structures are to be designed and constructed to satisfy the design requirements with regard to stability, strength, serviceability, brittle fracture, fatigue, fire, and durability such that they meet the following:

a) Remain fit with adequate reliability and be able to sustain all actions (loads) and other influences experienced during construction and use;

b) Have adequate durability under normal maintenance;

c) Do not suffer overall damage or collapse disproportionately under accidental events

like explosions, vehicle impact or due to consequences of human error to an extent beyond local damage. The potential for catastrophic damage shall be limited or avoided by appropriate choice of one or more of the following:

1) Avoiding, eliminating or reducing exposure to hazards, which the structure is likely to sustain.
2) Choosing structural forms, layouts and details and designing such that,
   i) the structure has low sensitivity to hazardous conditions; and
   ii) the structure survives with only local damage even after serious damage to any one individual element by the hazard;
3) Choosing suitable material, design and detailing procedure, construction specifications, and control procedures for shop fabrication and field construction as relevant to the particular structure.

The following conditions may be satisfied to avoid a disproportionate collapse:

a) The building should be effectively tied together at each principal floor level and each column should be effectively held in position by means of continuous ties (beams) nearly orthogonal, except where the steel work supports only cladding weighing not more than 0.7 kN/m^2 along with imposed and wind loads. These ties shall be steel members such as beams, which may be designed for other purposes, steel bar reinforcement anchoring the steel frame to concrete floor or steel mesh reinforcement in composite slab with steel profiled sheeting directly connected to beam with shear connectors. These steel ties and their end connections should be capable of resisting factored tensile force not less than the factored dead and imposed loads acting on the floor area tributary to the tie nor less than 75 kN. Such connection of ties to edge column should also be capable of resisting 1 percent of the maximum axial compression in the column at the level due to factored dead and imposed loads. All column splices should be capable of resisting a tensile force equal to the largest of a factored dead and imposed load reaction from a single floor level located between that column splice and the next column splice below that splice. Lateral load system to resist notional horizontal loads prescribed in **10.3.6** should be distributed throughout the building in nearly orthogonal directions so that no substantial portions is connected at only one point to such a system. Precast concrete or other heavy floor or roof units should be effectively anchored in the direction of their span either to each other over the support or directly to the support.

b) Where the above conditions to tie the columns to the floor adequately are not satisfied each storey of the building should be checked to ensure that disproportionate collapse would not precipitate by the notional removal, one at a time, of each column.

c) Where each floor is not laterally supported by more than one system, check should be made at each storey by removing one such lateral support system at a time to ensure that disproportionate collapse would not occur. The collapse is considered disproportionate, if more than 15 percent of the floor or roof area of 70 m^2 collapse at that level and at one adjoining level either above or below it, under a load equal to 1.05 or 0.9 times the dead load, 0.33 times temporary or full imposed load of permanent nature (as in storage buildings) and 0.33 times wind load acting together.

11.1.3 Structures designed for unusual or special functions shall comply with any other relevant additional limit state considered appropriate to that structure.

11.1.4 Generally structures and elements shall be designed by limit state method. Where limit state method cannot be conveniently adopted, working stress design [*see* Section 6(m)] may be used.

11.2 Limit State Design

11.2.1 For achieving the design objectives, the design shall be based on characteristic values for material strengths and applied loads (actions), which take into account the probability of variations in the material strengths and in the loads to be supported. The characteristic values shall be based on statistical data, if available. Where such data is not available, these shall be based on experience. The design values are derived from the characteristic values through the use of partial safety factors, both for material strengths and for loads. In the absence of special considerations, these factors shall have the values given in this Section according to the material, the type of load and the limit state being considered. The reliability of design is ensured by satisfying the requirement:

$$\text{Design action} \leq \text{Design strength}$$

11.2.2 Limit states are the states beyond which the structure no longer satisfies the performance requirements specified. The limit states are classified as:

a) Limit state of strength; and

b) Limit state of serviceability.

11.2.2.1 The limit states of strength are those associated with failures (or imminent failure), under the action of probable and most unfavourable combination of loads on the structure using the appropriate partial safety factors, which may endanger the safety of life and property. The limit state of strength includes,

a) loss of equilibrium of the structure as a whole or any of its parts or components.

b) loss of stability of the structure (including the effect of sway where appropriate and overturning) or any of its parts including supports and foundations.

c) failure by excessive deformation, rupture of the structure or any of its parts or components.

d) fracture due to fatigue.

e) brittle fracture.

11.2.2.2 The limit state of serviceability includes,

a) deformation and deflections, which may adversely affect the appearance or effective use of the structure or may cause improper functioning of equipment or services or may cause damages to finishes and non-structural members.

b) vibrations in the structure or any of its components causing discomfort to people, damages to the structure, its contents or which may limit its functional effectiveness. Special consideration shall be given to systems susceptible to vibration, such as large open floor areas free of partitions to ensure that such vibrations are acceptable for the intended use and occupancy (*see* Annex B).

c) repairable damage or crack due to fatigue.

d) corrosion, durability, and

e) fire.

11.3 Actions

The actions (loads) to be considered in design include direct actions (loads) experienced by the structure due to self weight, external actions, etc, and imposed deformations such as that due to temperature and settlements.

11.3.1 *Classification of Actions*

Actions are classified by their variation with time as given below:

a) *Permanent actions* (Q_p) — Actions due to self-weight of structural and non-structural components, fittings, ancillaries, and fixed equipment, etc.

b) *Variable actions* (Q_v) — Actions due to construction and service stage loads such as imposed (live) loads (crane loads, snow loads, etc.), wind loads, and earthquake loads, etc.

c) *Accidental actions* (Q_a) — Actions expected due to explosions, and impact of vehicles, etc.

11.3.2 *Characteristic Actions (Loads)*

11.3.2.1 The characteristic actions, Q_c, are the values of the different actions that are not expected to be exceeded with more than 5 percent probability, during the life of the structure and they are taken as,

a) the self-weight, in most cases calculated on the basis of nominal dimensions and unit weights (*see* **2** of Part 6 'Structural Design, Section 1 Loads, Forces and Effects' of the Code).

b) the variable loads, values of which are specified in relevant standard (*see* Part 6 'Structural Design, Section 1 Loads, Forces and Effects' of the Code).

c) the upper limit with a specified probability (usually 5 percent) not exceeding during some reference period (design life).

d) specified by client, or by designer in consultation with client, provided they satisfy the minimum provisions of the relevant loading standard.

11.3.2.2 The characteristic values of accidental loads generally correspond to the value specified by relevant code, standard or client. The design for accidental load is generally not required in building unless it is required by client or approving authority in which case, generally recommendation in **11.1.2** (c) or specialist literature shall be followed.

11.3.3 *Design Actions*

The design action, Q_d, is expressed as $Q_d = \sum_k \gamma_{fk} Q_{ck}$

where

λ_{fk} = partial safety factor for different loads k, given in Table 4 to account for,

a) possibility of unfavourable deviation of the load from the characteristic value,

b) possibility of inaccurate assessment of the load,

c) uncertainty in the assessment of effects of the load, and

d) uncertainty in the assessment of the limit states being considered.

Table 4 Partial Safety Factors for Loads, γ_f, for Limit States

(*Clauses* 9.5.1 *and* 11.3.3)

Sl No.	Combination	Limit State of Strength					Limit State of Serviceability			
		DL	IL [1]		WL/EL	AL	DL	IL [1]		WL/EL
			Leading	Accompanying				Leading	Accompanying	
(1)	(2)	(3)	(4)	(5)	(6)	(7)	(8)	(9)	(10)	
i)	DL+IL+CL	1.5	1.5	1.05	—	—	1.0	1.0	1.0	—
ii)	DL+IL+CL+	1.2	1.2	1.05	0.6	—	1.0	0.8	0.8	0.8
	WL/EL	1.2	1.2	0.53	1.2					
iii)	DL+WL/EL	1.5 (0.9) [2]	—	—	1.5	—	1.0	—	—	1.0
iv)	DL+ER	1.2 (0.9) [2]	1.2	—	—	—	—	—	—	—
v)	DL+IL+AL	1.0	0.35	0.35	—	1.0	—	—	—	—

[1] When action of different imposed loads is simultaneously considered, the leading imposed load shall be considered to be the one causing the higher load effects in the member/section.

[2] This value is to be considered when the dead load contributes to stability against overturning is critical or the dead load causes reduction in stress due to other loads.

Abbreviations:

DL = Dead load, IL = Imposed load (Live load), WL = Wind load, CL = Crane load (Vertical/Horizontal), AL = Accidental load, ER = Erection load, EL = Earthquake load.

NOTE — The effects of actions (loads) in terms of stresses or stress resultants may be obtained from an appropriate method of analysis as in **10**.

The loads or load effects shall be multiplied by the relevant γ_f factors, given in Table 4, to get the design loads or design load effects.

11.4 Strength

The ultimate strength calculation may require consideration of the following:

a) Loss of equilibrium of the structure or any part of it, considered as a rigid body, and

b) Failure by excessive deformation, rupture or loss of stability of the structure or any part of it including support and foundation.

11.4.1 *Design Strength*

The design strength, S_d, is obtained as given below from ultimate strength, S_u and partial safety factors for materials, γ_m given in Table 5.

$$S_d = S_u / \gamma_m$$

where partial safety factor for materials, γ_m account for,

a) possibility of unfavourable deviation of material strength from the characteristic value;

b) possibility of unfavourable variation of member sizes;

c) possibility of unfavourable reduction in member strength due to fabrication and tolerances; and

d) uncertainty in the calculation of strength of the members.

Table 5 Partial Safety Factor for Materials, γ_m

(*Clause* 11.4.1)

Sl No.	Definition	Partial Safety Factor	
(1)	(2)	(3)	
i)	Resistance, governed by yielding, γ_{m0}	1.10	
ii)	Resistance of member to buckling, γ_{m0}	1.10	
iii)	Resistance, governed by ultimate stress, γ_{m1}	1.25	
iv)	Resistance of connection:	*Shop Fabrications*	*Field Fabrications*
	a) Bolts-Friction Type, γ_{mf}	1.25	1.25
	b) Bolts-Bearing Type, γ_{mb}	1.25	1.25
	c) Rivets, γ_{mr}	1.25	1.25
	d) Welds, γ_{mw}	1.25	1.50

11.5 Factors Governing the Ultimate Strength

11.5.1 *Stability*

Stability shall be ensured for the structure as a whole and for each of its elements. This should include, overall frame stability against overturning and sway, as given in **11.5.1.1** and **11.5.1.2**.

11.5.1.1 *Stability against overturning*

The structure as a whole or any part of it shall be designed to prevent instability due to overturning, uplift or sliding under factored load as given below:

a) The actions shall be divided into components aiding instability and components resisting instability.

b) The permanent and variable actions and their effects causing instability shall be combined using appropriate partial safety factors for loads as per the limit state requirements. to obtain maximum destabilizing effect.

c) The permanent actions (loads) and effects contributing to resistance shall be multiplied with a partial safety factor 0.9 and added together with design resistance (after multiplying with appropriate partial safety factor). Variable actions and their effects contributing to resistance shall be disregarded.

d) The resistance effect shall be greater than or equal to the destabilizing effect. Combination of imposed and dead loads should be such as to cause most severe effect on overall stability.

11.5.1.2 *Sway stability*

The whole structure, including portions between expansion joints, shall be adequately stiff against sway. To ensure this, in addition to designing for applied horizontal loads, a separate check should be carried out for notional horizontal loads such as given in **10.3.6** to evaluate the sway under gravity loads.

11.5.2 *Fatigue*

Generally fatigue need not be considered unless a structure or element is subjected to numerous significant fluctuations of stress. Stress changes due to fluctuations in wind loading normally need not be considered. Fatigue design shall be in accordance with Section 6(p). When designing for fatigue, the partial safety factor for load, γ_f, equal to unity shall be used for the load causing stress fluctuation and stress range.

11.5.3 *Plastic Collapse*

Plastic analysis and design may be used. if the requirement specified under the plastic method of analysis (*see* **10.5**) are satisfied.

11.6 Limit State of Serviceability

Serviceability limit state is related to the criteria governing normal use. Serviceability limit state is limit state beyond which the service criteria specified below. are no longer met:

a) Deflection limit,

b) Vibration limit,

c) Durability consideration. and

d) Fire resistance.

Unless specified otherwise (*see* Table 4). partial safety factor for loads, γ_f, of value equal to unity shall be used for all loads leading to serviceability limit states to check the adequacy of the structure under serviceability limit states.

11.6.1 *Deflection*

The deflection under serviceability loads of a building or a building component should not impair the strength of the structure or components or cause damage to finishing. Deflections are to be checked for the most adverse but realistic combination of service loads and their arrangement, by elastic analysis, using partial safety factors in Table 4 for loads, as required, in Table 6. Table 6 gives recommended limits of deflections for certain structural members and systems. In Table 6, imposed load should include all post construction loads including superimposed dead loads. Circumstances may arise where greater or lesser values would be more appropriate, depending upon the nature of material in element to be supported (vulnerable to cracking or not) and intended use of the structure, as required by client.

11.6.1.1 Where the deflection due to the combination of dead load and imposed load is likely to be excessive, consideration should be given to pre-camber the beams, trusses and girders. The value of desired camber shall be specified in design drawing. Generally, for spans greater than 25 m, a camber approximately equal to the deflection due to dead loads plus half the imposed load may be used. The deflection of a member shall be calculated without considering the impact factor or dynamic effect of the loads on deflection. Roofs, which are very flexible. shall be designed to withstand any additional load that is likely to occur as a result of ponding of water or accumulation of snow or ice.

11.6.2 *Vibration*

Suitable provisions in the design shall be made for the dynamic effects of imposed loads, impact loads and vibration due to machinery operating loads. In severe cases possibility of resonance, fatigue or unacceptable vibrations shall be investigated. Unusually flexible structures (generally the height to effective width of lateral load resistance system exceeding 5:1) shall be investigated for lateral vibration under dynamic wind loads. Structures subjected to large number of cycles of loading shall be designed against fatigue failure, as specified in Section 6(p). Floor vibration effect shall be considered using specialist literature (*see* Annex B).

11.6.3 *Durability*

Factors that affect the durability of the buildings, under conditions relevant to their intended life. are listed below:

a) Environment,

b) Degree of exposure,

c) Shape of the member and the structural detail,

d) Protective measure, and

e) Ease of maintenance.

Table 6 Deflection Limits

(*Clause* 11.6.1)

Type of Building (1)	Deflection (2)	Design Load (3)	Member (4)	Supporting (5)	Maximum Deflection
Industrial buildings	Vertical	Imposed load and wind load	Purlins and Girts	Elastic cladding	Span / [redacted]
				Brittle cladding	Span / 180
		Imposed load	Simple span	Elastic cladding	Span / 240
				Brittle cladding	Span / 300
		Imposed load	Cantilever span	Elastic cladding	Span / 120
				Brittle cladding	Span / 150
		Imposed load, wind load and crane load	Rafter supporting	Profiled metal sheeting	Span / 180
				Plastered sheeting	Span / 240
		Crane load (Manual operation)	Gantry	Wheels of crane	Span / 500
		Crane load (Electric operation up to 50 t)	Gantry	Wheels of crane	Span / 750
		Crane load (Electric operation over 50 t)	Gantry	Wheels of crane	Span / 1 000
	Lateral	No cranes (due to wind)	Column	Elastic cladding	Height / 150
				Masonry/Brittle cladding	Height / 240
		Crane load and wind load	Gantry (lateral)	Crane (absolute)	Span / 400
				Relative displacement between rails supporting wheels of crane	10 mm
		Crane load and wind load	Column/frame	Gantry (Elastic cladding)	Height / 200
				Gantry (Brittle cladding; cab operated)	Height / 400
Other buildings	Vertical	Imposed load	Floor and roof	Elements not susceptible to cracking	Span / 300
				Elements susceptible to cracking	Span / 360
		Imposed load	Cantilever	Elements not susceptible to cracking	Span / 150
				Elements susceptible to cracking	Span / 180
	Lateral	Wind load	Building	Elastic cladding	Height / 300
				Battle cladding	Height / 500
		Wind load	Inter-storey drift	—	Store[redacted]

11.6.3.1 The durability of steel structures shall be ensured by following recommendations in Section 6(r). Specialist literature may be referred to for more detailed and additional information in design for durability.

11.6.4 *Fire Resistance*

Fire resistance of a steel member is a function of its mass, its geometry, and the actions to which it is subjected, its structural support condition, fire protection measures adopted and the fire to which it is exposed. Design provisions to resist fire are briefly discussed in Section 6(s). Specialist literature may be referred to for more detailed information in design of fire resistance of steel structures.

SECTION 6(f) DESIGN OF TENSION MEMBERS

12 DESIGN OF TENSION MEMBERS

12.1 Tension Members

Tension members are linear members in which axial forces act to cause elongation (stretch). Such members can sustain loads up to the ultimate load, at which stage they may fail by rupture at a critical section. However, if the gross area of the member yields over a major portion of its length before the rupture load is reached, the member may become non-functional due to excessive elongation. Plates and other rolled sections in tension may also fail by block shear of end bolted regions (*see* **12.4.1**).

The factored design tension T, in the members shall satisfy the following requirement:

$$T < T_d$$

where

T_d = design strength of the member.

The design strength of a member under axial tension, T_d, is the lowest of the design strength due to yielding of gross section, T_{dg}; rupture strength of critical section, T_{dn}; and block shear T_{db}, given in **12.2**, **12.3** and **12.4**, respectively.

12.2 Design Strength Due to Yielding of Gross Section

The design strength of members under axial tension, T_{dg}, as governed by yielding of gross section, is given by:

$$T_{dg} = A_g f_y / \gamma_{m0}$$

where

f_y = yield stress of the material,

A_g = gross area of Cross-section, and

γ_{m0} = partial safety factor for failure in tension by yielding (*see* Table 5).

12.3 Design Strength Due to Rupture of Critical Section

12.3.1 *Plates*

The design strength in tension of a plate, T_{dn}, as governed by rupture of net cross-sectional area, A_n, at the holes is given by:

$$T_{dn} = 0.9\, A_n f_u / \gamma_{m1}$$

where

γ_{m1} = partial safety factor for failure at ultimate stress (*see* Table 5),

f_u = ultimate stress of the material, and

A_n = net effective area of the member given by.

$$A_n = \left[b - nd_h + \sum \frac{p_{si}^2}{4g_i} \right] t$$

where

b, t = width and thickness of the plate, respectively,

d_h = diameter of the bolt hole (2 mm in addition to the diameter of the hole, in case of directly punched holes),

g = gauge length between the bolt holes, as shown in Fig. 5,

p_s = staggered pitch length between line of bolt holes, as shown in Fig. 5,

n = number of bolt holes in the critical section, and

i = subscript for summation of all the inclined legs.

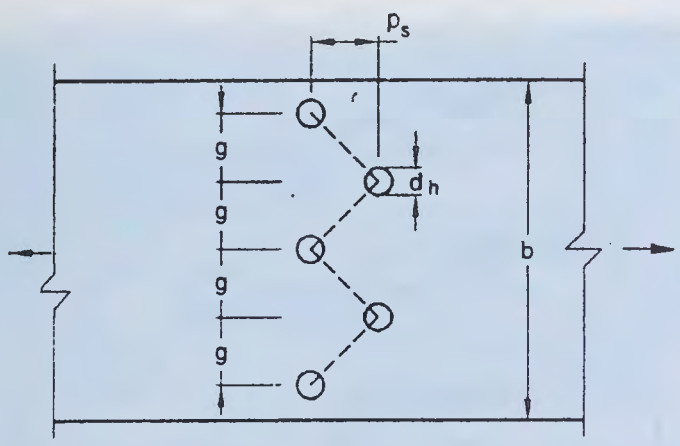

FIG. 5 PLATES WITH BOLTS HOLES IN TENSION

12.3.2 *Threaded Rods*

The design strength of threaded rods in tension, T_{dn}, as governed by rupture is given by:

$$T_{dn} = 0.9\, A_n f_u / \gamma_{m1}$$

where

A_n = net root area at the threaded section.

12.3.3 *Single Angles*

The rupture strength of an angle connected through one leg is affected by shear lag. The design strength, T_{dn}, as governed by rupture at net section is given by:

$$T_{dn} = 0.9\, A_{nc} f_u / \gamma_{m1} + \beta\, A_{go} f_y / \gamma_{m0}$$

where

$$\beta = 1.4 - 0.076\,(w/t)\,(f_y/f_u)\,(b_s/L_c) \le (0.9 f_u \gamma_{m0} / f_y \gamma_{m1}) \ge 0.7$$

where

w = outstand leg width,

b_s = shear lag width, as shown in Fig. 6, and

L_c = length of the end connection, that is the distance between the outermost bolts in the end joint measured along the load direction or length of the weld along the load direction.

For preliminary sizing, the rupture strength of net section may be approximately taken as:

$$T_{dn} = \alpha\, A_n f_u / \gamma_{m1}$$

where

α = 0.6 for one or two bolts, 0.7 for three bolts and 0.8 for four or more bolts along the length in the end connection or equivalent weld length,

A_n = net area of the total cross-section,

A_{nc} = net area of the connected leg,

A_{go} = gross area of the outstanding leg, and

t = thickness of the leg.

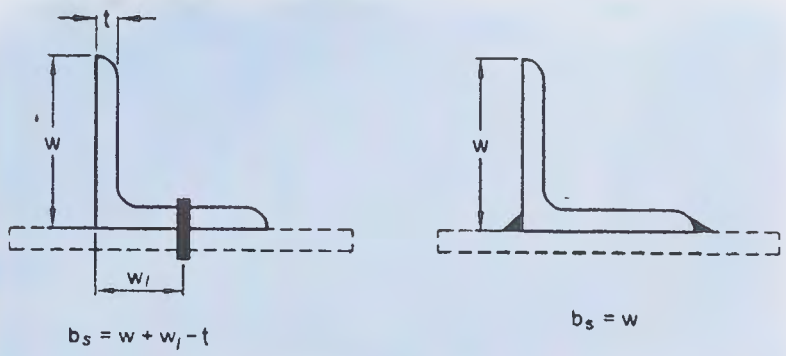

FIG. 6 ANGLES WITH SINGLE LEG CONNECTIONS

12.3.4 *Other Section*

The rupture strength, T_{dn}, of the double angles, channels, I-sections and other rolled steel sections, connected by one or more elements to an end gusset is also governed by shear lag effects. The design tensile strength of such sections as governed by tearing of net section may also be calculated using equation in **12.3.3**, where b is calculated based on the shear lag distance, b_s, taken

from the farthest edge of the outstanding leg to the nearest bolt/weld line in the connected leg of the cross-section.

12.4 Design Strength Due to Block Shear

The strength as governed by block shear at an end connection of plates and angles is calculated as given in **12.4.1**.

12.4.1 *Bolted Connections*

The block shear strength, T_{db} of connection shall be taken as the smaller of,

$$T_{db} = [A_{vg} f_y / (\sqrt{3}\,\gamma_{m0}) + 0.9 A_{tn} f_u / \gamma_{m1}]$$

or

$$T_{db} = [0.9 A_{vn} f_u / (\sqrt{3}\,\gamma_{m1}) + A_{tg} f_y / \gamma_{m0}]$$

where

A_{vg}, A_{vn} = minimum gross and net area in shear along bolt line parallel to external force, respectively (1-2 and 3-4 as shown in Fig. 7A and 1-2 as shown in Fig. 7B),

A_{tg}, A_{tn} = minimum gross and net area in tension from the bolt hole to the toe of the angle, end bolt line, perpendicular to the line of force, respectively (2-3 as shown in Fig. 7B), and

f_u, f_y = ultimate and yield stress of the material, respectively.

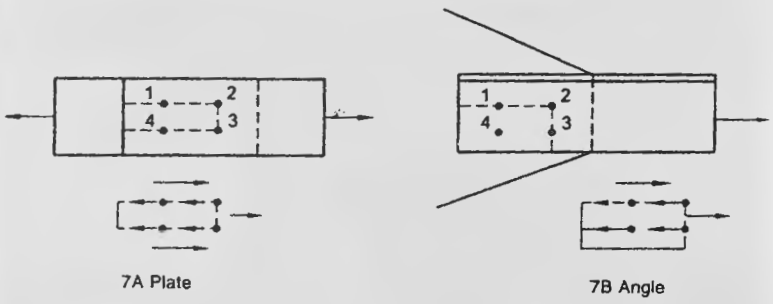

FIG. 7 BLOCK SHEAR FAILURE

12.4.2 *Welded Connection*

The block shear strength, T_{db} shall be checked for welded end connections by taking an appropriate section in the member around the end weld, which can shear off as a block.

SECTION 6(g) DESIGN OF COMPRESSION MEMBERS

13 DESIGN OF COMPRESSION MEMBERS

13.1 Design Strength

13.1.1 Common hot rolled and built-up steel members used for carrying axial compression, usually fail by flexural buckling. The buckling strength of these members is affected by residual stresses, initial bow and accidental eccentricities of load. To account for all these factors, the strength of members subjected to axial compression is defined by buckling class a, b, c, or d as given Table 7.

13.1.2 The factored design compression, P in members shall satisfy the following requirement:

$$P < P_d$$

where

$P_d = A_e f_{cd}$

where

A_e = effective sectional area as defined in **13.3.2**, and

f_{cd} = design compressive stress, obtained as per **13.1.2.1**.

13.1.2.1 The design compressive strength, f_{cd}, of axially loaded compression members shall be calculated using the following equation:

$$f_{cd} = \frac{f_y / \gamma_{m0}}{\phi + \left[\phi^2 - \lambda^2\right]^{0.5}} = \chi f_y / \gamma_{m0} \le f_y / \gamma_{m0}$$

where

$\phi = 0.5[1 + \alpha(\lambda - 0.2) + \lambda^2]$

λ = non-dimensional effective slenderness ratio

$$= \sqrt{f_y / f_{cc}} = \sqrt{f_y \left(KL/r\right)^2 / \pi^2 E}$$

f_{cc} = Euler buckling stress $= \dfrac{\pi^2 E}{(KL/r)^2}$

where

KL/r = effective slenderness ratio or ratio of effective length, KL to appropriate radius of gyration, r;

α = imperfection factor given in Table 7;

χ = stress reduction factor (*see* Table 8) for different buckling class, slenderness ratio and yield stress

$$= \frac{1}{\left[\phi + \left(\phi^2 - \lambda^2\right)^{0.5}\right]}$$

γ_{m0} = partial safety factor for material strength.

NOTE — Calculated values of design compressive stress, f_{cd} for different buckling classes are given in Table 9.

13.1.2.2 The classification of different sections under different buckling class a, b, c or d, is given in Table 10.

The stress reduction factor χ, and the design compressive stress f_{cd}, for different buckling class, yield stress, and effective slenderness ratio is given in Table 8 for convenience. The curves corresponding to different buckling class are presented in non-dimensional form, in Fig. 8.

Table 7 Imperfection Factor, α

(*Clauses* 13.1.1 *and* 13.1.2.1)

Buckling Class	a	b	c	d
(1)	(2)	(3)	(4)	(5)
α	0.21	0.34	0.49	0.76

13.2 Effective Length of Compression Members

13.2.1 The effective length *KL,* is calculated from the actual length *L*, of the member, considering the rotational and relative translational boundary conditions at the ends. The actual length shall be taken as the length from centre-to-centre of its intersections with the supporting members in the plane of the buckling deformation. In the case of a member with a free end, the free standing length from the centre of the intersecting member at the supported end, shall be taken as the actual length.

13.2.2 *Effective Length*

Where the boundary conditions in the plane of buckling can be assessed, the effective length, *KL* can be calculated on the basis of Table 11. Where frame analysis does not consider the equilibrium of a framed structure in the deformed shape (second-order analysis or advanced analysis), the effective length of compression members in such cases can be calculated using the procedure given in **C-1**. The effective length of stepped column in single storey buildings can be calculated using the procedure given in **C-2**.

13.2.3 *Eccentric Beam Connection*

In cases where the beam connections are eccentric in plan with respect to the axes of the column, the same conditions of restraint as in concentric connection shall be deemed to apply, provided the connections are carried across the flange or web of the columns as the case may be, and the web of the beam lies within, or in direct contact with the column section. Where practical difficulties prevent this, the effective length shall be taken as equal to the distance between points of restraint, in non-sway frames.

13.2.4 *Compression Members in Trusses*

In the case of bolted, riveted or welded trusses and braced frames, the effective length, *KL*, of the compression members shall be taken as 0.7 to 1.0 times the distance between centres of connections, depending on the degree of end restraint provided. In the case of members of trusses, buckling in the plane perpendicular to the plane of the truss, the effective length, *KL* shall be taken as the distance between the centers of intersection. The design of angle struts shall be as specified in **13.5**.

13.3 Design Details

13.3.1 *Thickness of Plate Elements*

Classification of members on the basis of thickness of

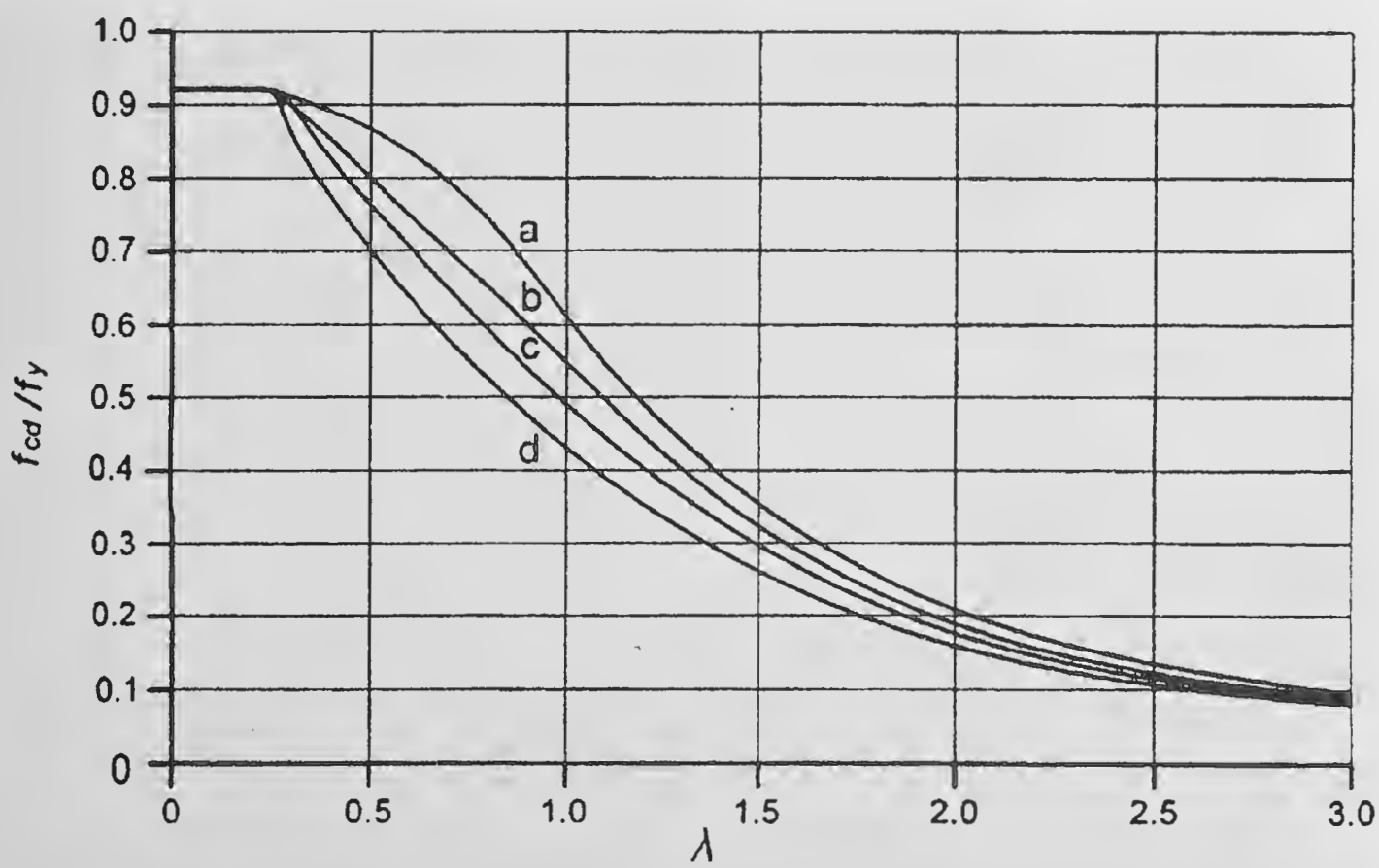

FIG. 8 COLUMN BUCKLING CURVES

Table 8 (a) Stress Reduction Factor, χ for Column Buckling Class a

(*Clauses* 13.1.2.1 *and* 13.1.2.2)

KL/r	Yield Stress, f_y (MPa)																		
↓	200	210	220	230	240	250	260	280	300	320	340	360	380	400	420	450	480	510	540
10	1.000	1.000	1.000	1.000	1.000	1.000	1.000	1.000	1.000	1.000	1.000	1.000	1.000	1.000	1.000	1.000	1.000	1.000	1.000
20	1.000	0.999	0.998	0.997	0.995	0.994	0.993	0.993	0.990	0.988	0.986	0.984	0.983	0.981	0.979	0.977	0.975	0.972	0.970
30	0.977	0.975	0.974	0.972	0.970	0.969	0.967	0.965	0.961	0.957	0.954	0.951	0.948	0.946	0.943	0.938	0.934	0.930	0.925
40	0.952	0.949	0.947	0.944	0.942	0.939	0.937	0.934	0.926	0.921	0.916	0.911	0.906	0.901	0.896	0.888	0.881	0.873	0.865
50	0.923	0.919	0.915	0.911	0.908	0.904	0.900	0.896	0.884	0.876	0.867	0.859	0.851	0.842	0.834	0.820	0.807	0.794	0.780
60	0.888	0.883	0.877	0.871	0.865	0.859	0.853	0.847	0.828	0.816	0.803	0.790	0.777	0.763	0.750	0.730	0.710	0.690	0.671
70	0.846	0.837	0.829	0.820	0.811	0.803	0.794	0.785	0.758	0.740	0.722	0.703	0.686	0.668	0.651	0.626	0.602	0.579	0.557
80	0.793	0.781	0.769	0.757	0.746	0.734	0.722	0.710	0.675	0.653	0.631	0.610	0.589	0.570	0.551	0.525	0.501	0.478	0.458
90	0.730	0.715	0.700	0.685	0.671	0.657	0.643	0.628	0.590	0.565	0.542	0.520	0.500	0.481	0.463	0.439	0.416	0.396	0.377
100	0.661	0.644	0.627	0.610	0.594	0.579	0.564	0.549	0.510	0.486	0.463	0.443	0.424	0.407	0.390	0.368	0.348	0.331	0.314
110	0.591	0.573	0.555	0.538	0.522	0.507	0.492	0.478	0.440	0.418	0.397	0.379	0.362	0.346	0.332	0.312	0.295	0.279	0.265
120	0.525	0.507	0.489	0.473	0.458	0.443	0.429	0.416	0.381	0.361	0.343	0.326	0.311	0.297	0.284	0.267	0.252	0.238	0.226
130	0.466	0.448	0.432	0.416	0.402	0.388	0.376	0.364	0.332	0.314	0.298	0.283	0.269	0.257	0.246	0.231	0.217	0.206	0.195
140	0.413	0.397	0.382	0.368	0.355	0.342	0.331	0.320	0.291	0.275	0.260	0.247	0.235	0.224	0.214	0.201	0.189	0.179	0.170
150	0.368	0.353	0.339	0.326	0.314	0.303	0.293	0.283	0.257	0.243	0.229	0.218	0.207	0.197	0.189	0.177	0.166	0.157	0.149
160	0.329	0.316	0.303	0.291	0.280	0.270	0.261	0.252	0.229	0.215	0.204	0.193	0.184	0.175	0.167	0.157	0.147	0.139	0.132
170	0.296	0.283	0.272	0.261	0.251	0.242	0.233	0.225	0.204	0.192	0.182	0.172	0.164	0.156	0.149	0.140	0.131	0.124	0.117
180	0.267	0.255	0.245	0.235	0.226	0.218	0.210	0.203	0.184	0.173	0.163	0.155	0.147	0.140	0.134	0.125	0.118	0.111	0.105
190	0.242	0.231	0.222	0.213	0.205	0.197	0.190	0.183	0.166	0.156	0.147	0.140	0.133	0.126	0.121	0.113	0.106	0.100	0.095
200	0.220	0.210	0.202	0.193	0.186	0.179	0.172	0.166	0.151	0.142	0.134	0.127	0.120	0.115	0.109	0.102	0.096	0.091	0.086
210	0.201	0.192	0.184	0.177	0.170	0.163	0.157	0.152	0.137	0.129	0.122	0.115	0.110	0.104	0.099	0.093	0.087	0.083	0.078
220	0.184	0.176	0.169	0.162	0.155	0.149	0.144	0.139	0.126	0.118	0.111	0.106	0.100	0.095	0.091	0.085	0.080	0.075	0.071
230	0.170	0.162	0.155	0.149	0.143	0.137	0.132	0.128	0.115	0.108	0.102	0.097	0.092	0.088	0.083	0.078	0.073	0.069	0.065
240	0.157	0.149	0.143	0.137	0.132	0.127	0.122	0.118	0.106	0.100	0.094	0.089	0.085	0.081	0.077	0.072	0.068	0.064	0.060
250	0.145	0.138	0.132	0.127	0.122	0.117	0.113	0.109	0.098	0.092	0.087	0.082	0.078	0.074	0.071	0.066	0.062	0.059	0.056

Table 8 (b) Stress Reduction Factor, χ for Column Buckling Class b

(*Clauses* 13.1.2.1 *and* 13.1.2.2)

KL/r	Yield Stress, f_y (MPa)																		
↓	200	210	220	230	240	250	260	280	300	320	340	360	380	400	420	450	480	510	540
10	1.000	1.000	1.000	1.000	1.000	1.000	1.000	1.000	1.000	1.000	1.000	1.000	1.000	1.000	1.000	1.000	1.000	1.000	1.000
20	1.000	0.998	0.996	0.994	0.993	0.991	0.990	0.986	0.983	0.981	0.978	0.975	0.972	0.970	0.967	0.963	0.960	0.956	0.953
30	0.963	0.961	0.958	0.955	0.953	0.950	0.948	0.943	0.938	0.933	0.929	0.924	0.920	0.915	0.911	0.904	0.898	0.892	0.886
40	0.925	0.921	0.917	0.913	0.909	0.906	0.902	0.895	0.887	0.880	0.873	0.866	0.859	0.852	0.845	0.835	0.825	0.815	0.805
50	0.883	0.877	0.872	0.866	0.861	0.855	0.850	0.839	0.829	0.818	0.808	0.798	0.787	0.777	0.767	0.752	0.737	0.722	0.708
60	0.835	0.827	0.820	0.812	0.805	0.798	0.790	0.775	0.761	0.746	0.732	0.718	0.704	0.691	0.677	0.657	0.638	0.620	0.602
70	0.781	0.771	0.761	0.751	0.742	0.732	0.722	0.703	0.685	0.667	0.649	0.632	0.615	0.599	0.584	0.561	0.540	0.520	0.502
80	0.721	0.709	0.697	0.685	0.673	0.661	0.650	0.627	0.606	0.585	0.566	0.547	0.529	0.512	0.496	0.474	0.453	0.434	0.416
90	0.657	0.643	0.629	0.615	0.602	0.589	0.576	0.552	0.530	0.508	0.488	0.470	0.452	0.436	0.421	0.400	0.380	0.363	0.346
100	0.593	0.577	0.562	0.548	0.534	0.520	0.507	0.483	0.461	0.440	0.421	0.403	0.387	0.372	0.358	0.339	0.321	0.306	0.291
110	0.531	0.515	0.500	0.485	0.471	0.458	0.445	0.422	0.401	0.381	0.364	0.348	0.333	0.319	0.306	0.289	0.274	0.260	0.247
120	0.474	0.458	0.443	0.429	0.416	0.403	0.391	0.370	0.350	0.332	0.316	0.301	0.288	0.276	0.265	0.249	0.236	0.223	0.212
130	0.423	0.408	0.394	0.380	0.368	0.356	0.345	0.325	0.307	0.291	0.276	0.263	0.251	0.240	0.230	0.217	0.204	0.194	0.184
140	0.378	0.364	0.350	0.338	0.327	0.316	0.306	0.287	0.271	0.256	0.243	0.231	0.221	0.211	0.202	0.190	0.179	0.169	0.161
150	0.339	0.325	0.313	0.302	0.291	0.281	0.272	0.255	0.241	0.227	0.215	0.205	0.195	0.186	0.178	0.167	0.158	0.149	0.142
160	0.305	0.292	0.281	0.271	0.261	0.252	0.243	0.228	0.215	0.203	0.192	0.182	0.174	0.166	0.158	0.149	0.140	0.133	0.126
170	0.275	0.264	0.253	0.244	0.235	0.227	0.219	0.205	0.193	0.182	0.172	0.163	0.155	0.148	0.142	0.133	0.125	0.118	0.112
180	0.249	0.239	0.229	0.220	0.212	0.205	0.198	0.185	0.174	0.164	0.155	0.147	0.140	0.133	0.128	0.120	0.113	0.106	0.101
190	0.227	0.217	0.208	0.200	0.193	0.186	0.179	0.168	0.157	0.148	0.140	0.133	0.127	0.121	0.115	0.108	0.102	0.096	0.091
200	0.207	0.198	0.190	0.183	0.176	0.169	0.163	0.153	0.143	0.135	0.128	0.121	0.115	0.110	0.105	0.098	0.092	0.087	0.083
210	0.190	0.182	0.174	0.167	0.161	0.155	0.149	0.140	0.131	0.123	0.117	0.110	0.105	0.100	0.096	0.090	0.084	0.080	0.075
220	0.174	0.167	0.160	0.154	0.148	0.142	0.137	0.128	0.120	0.113	0.107	0.101	0.096	0.092	0.088	0.082	0.077	0.073	0.069
230	0.161	0.154	0.147	0.141	0.136	0.131	0.126	0.118	0.111	0.104	0.098	0.093	0.088	0.084	0.080	0.075	0.071	0.067	0.063
240	0.149	0.142	0.136	0.131	0.126	0.121	0.117	0.109	0.102	0.096	0.091	0.086	0.082	0.078	0.074	0.070	0.065	0.062	0.058
250	0.138	0.132	0.126	0.121	0.117	0.112	0.108	0.101	0.095	0.089	0.084	0.080	0.076	0.072	0.069	0.064	0.060	0.057	0.054

Table 8 (c) Stress Reduction Factor, χ for Column Buckling Class c

(*Clauses* 13.1.2.1 *and* 13.1.2.2)

KL/r	Yield Stress, f_y (MPa)																		
↓	200	210	220	230	240	250	260	280	300	320	340	360	380	400	420	450	480	510	540
10	1.000	1.000	1.000	1.000	1.000	1.000	1.000	1.000	1.000	1.000	1.000	1.000	1.000	1.000	1.000	1.000	1.000	1.000	1.000
20	0.999	0.997	0.994	0.992	0.990	0.987	0.985	0.981	0.976	0.972	0.968	0.964	0.961	0.957	0.953	0.948	0.943	0.938	0.933
30	0.948	0.944	0.941	0.937	0.933	0.930	0.926	0.920	0.913	0.907	0.901	0.895	0.889	0.883	0.877	0.869	0.861	0.853	0.845
40	0.896	0.891	0.885	0.880	0.875	0.870	0.866	0.856	0.847	0.838	0.829	0.820	0.812	0.803	0.795	0.783	0.771	0.760	0.748
50	0.841	0.834	0.827	0.821	0.814	0.807	0.801	0.788	0.776	0.763	0.752	0.740	0.729	0.717	0.706	0.690	0.675	0.660	0.645
60	0.783	0.774	0.765	0.757	0.748	0.740	0.732	0.716	0.700	0.685	0.670	0.656	0.642	0.628	0.615	0.596	0.578	0.561	0.544
70	0.722	0.711	0.700	0.690	0.680	0.670	0.660	0.641	0.623	0.605	0.588	0.572	0.557	0.542	0.528	0.508	0.489	0.471	0.454
80	0.659	0.646	0.634	0.622	0.611	0.600	0.589	0.568	0.548	0.529	0.512	0.495	0.479	0.464	0.450	0.430	0.412	0.395	0.379
90	0.596	0.583	0.569	0.557	0.544	0.533	0.521	0.499	0.479	0.460	0.443	0.426	0.411	0.397	0.383	0.365	0.348	0.332	0.318
100	0.536	0.522	0.508	0.495	0.483	0.471	0.459	0.438	0.418	0.400	0.384	0.368	0.354	0.341	0.328	0.311	0.296	0.282	0.269
110	0.480	0.466	0.453	0.440	0.428	0.416	0.405	0.385	0.366	0.349	0.333	0.319	0.306	0.294	0.283	0.268	0.254	0.242	0.230
120	0.430	0.416	0.403	0.391	0.379	0.368	0.358	0.339	0.321	0.306	0.291	0.278	0.267	0.256	0.246	0.232	0.220	0.209	0.199
130	0.385	0.372	0.360	0.348	0.337	0.327	0.317	0.299	0.283	0.269	0.256	0.244	0.234	0.224	0.215	0.203	0.192	0.182	0.173
140	0.346	0.333	0.322	0.311	0.301	0.291	0.282	0.266	0.251	0.238	0.227	0.216	0.206	0.197	0.189	0.178	0.168	0.160	0.152
150	0.311	0.300	0.289	0.279	0.269	0.261	0.252	0.237	0.224	0.212	0.202	0.192	0.183	0.175	0.168	0.158	0.149	0.141	0.134
160	0.281	0.270	0.260	0.251	0.242	0.234	0.227	0.213	0.201	0.190	0.180	0.172	0.164	0.156	0.150	0.141	0.133	0.126	0.120
170	0.255	0.245	0.236	0.227	0.219	0.212	0.205	0.192	0.181	0.171	0.162	0.154	0.147	0.140	0.134	0.126	0.119	0.113	0.107
180	0.232	0.223	0.214	0.206	0.199	0.192	0.186	0.174	0.164	0.155	0.147	0.139	0.133	0.127	0.121	0.114	0.107	0.102	0.096
190	0.212	0.203	0.195	0.188	0.181	0.175	0.169	0.158	0.149	0.140	0.133	0.126	0.120	0.115	0.110	0.103	0.097	0.092	0.087
200	0.194	0.186	0.179	0.172	0.166	0.160	0.154	0.144	0.136	0.128	0.121	0.115	0.110	0.105	0.100	0.094	0.089	0.084	0.079
210	0.178	0.171	0.164	0.158	0.152	0.146	0.141	0.132	0.124	0.117	0.111	0.105	0.100	0.096	0.092	0.086	0.081	0.076	0.072
220	0.164	0.157	0.151	0.145	0.140	0.135	0.130	0.122	0.114	0.108	0.102	0.097	0.092	0.088	0.084	0.079	0.074	0.070	0.066
230	0.152	0.145	0.140	0.134	0.129	0.124	0.120	0.112	0.105	0.099	0.094	0.089	0.085	0.081	0.077	0.073	0.068	0.065	0.061
240	0.141	0.135	0.129	0.124	0.120	0.115	0.111	0.104	0.098	0.092	0.087	0.082	0.078	0.075	0.071	0.067	0.063	0.060	0.056
250	0.131	0.125	0.120	0.115	0.111	0.107	0.103	0.096	0.090	0.085	0.081	0.076	0.073	0.069	0.066	0.062	0.058	0.055	0.052

Table 8 (d) Stress Reduction Factor, χ for Column Buckling Class d

(*Clauses* 13.1.2.1 *and* 13.1.2.2)

KL/r	Yield Stress, f_y (MPa)																		
↓	200	210	220	230	240	250	260	280	300	320	340	360	380	400	420	450	480	510	540
10	1.000	1.000	1.000	1.000	1.000	1.000	1.000	1.000	1.000	1.000	1.000	1.000	1.000	1.000	1.000	1.000	1.000	1.000	1.000
20	0.999	0.995	0.991	0.988	0.984	0.980	0.977	0.970	0.964	0.958	0.952	0.946	0.940	0.935	0.930	0.922	0.915	0.908	0.901
30	0.922	0.916	0.911	0.906	0.901	0.896	0.891	0.881	0.872	0.863	0.855	0.847	0.839	0.831	0.823	0.813	0.802	0.792	0.782
40	0.848	0.841	0.834	0.828	0.821	0.815	0.808	0.796	0.784	0.773	0.762	0.751	0.741	0.731	0.721	0.707	0.694	0.681	0.668
50	0.777	0.768	0.760	0.752	0.744	0.736	0.728	0.713	0.699	0.685	0.672	0.659	0.647	0.635	0.624	0.608	0.592	0.577	0.563
60	0.707	0.697	0.687	0.678	0.668	0.659	0.651	0.634	0.617	0.602	0.587	0.573	0.560	0.547	0.535	0.517	0.501	0.486	0.471
70	0.640	0.629	0.618	0.607	0.597	0.587	0.578	0.559	0.542	0.526	0.510	0.496	0.482	0.469	0.456	0.439	0.423	0.408	0.394
80	0.576	0.564	0.553	0.542	0.531	0.521	0.511	0.492	0.474	0.458	0.442	0.428	0.414	0.402	0.390	0.373	0.358	0.344	0.330
90	0.517	0.505	0.493	0.482	0.471	0.461	0.451	0.432	0.415	0.399	0.384	0.370	0.357	0.345	0.334	0.319	0.304	0.292	0.280
100	0.464	0.451	0.440	0.428	0.418	0.408	0.398	0.380	0.363	0.348	0.334	0.321	0.309	0.298	0.288	0.274	0.261	0.249	0.239
110	0.416	0.404	0.392	0.381	0.371	0.361	0.352	0.335	0.319	0.305	0.292	0.281	0.270	0.259	0.250	0.237	0.226	0.215	0.206
120	0.373	0.361	0.350	0.340	0.330	0.321	0.313	0.297	0.282	0.269	0.257	0.246	0.236	0.227	0.219	0.207	0.197	0.187	0.179
130	0.336	0.325	0.314	0.305	0.295	0.287	0.279	0.264	0.251	0.239	0.228	0.218	0.209	0.200	0.193	0.182	0.173	0.164	0.157
140	0.303	0.292	0.283	0.274	0.265	0.257	0.250	0.236	0.224	0.213	0.203	0.194	0.185	0.178	0.171	0.161	0.153	0.145	0.138
150	0.274	0.264	0.255	0.247	0.239	0.231	0.224	0.212	0.201	0.190	0.181	0.173	0.165	0.159	0.152	0.144	0.136	0.129	0.123
160	0.249	0.240	0.231	0.223	0.216	0.209	0.203	0.191	0.181	0.171	0.163	0.155	0.149	0.142	0.137	0.129	0.122	0.116	0.110
170	0.227	0.218	0.210	0.203	0.196	0.190	0.184	0.173	0.164	0.155	0.147	0.140	0.134	0.128	0.123	0.116	0.110	0.104	0.099
180	0.207	0.199	0.192	0.185	0.179	0.173	0.167	0.157	0.149	0.141	0.134	0.127	0.122	0.116	0.111	0.105	0.099	0.094	0.089
190	0.190	0.183	0.176	0.169	0.164	0.158	0.153	0.144	0.136	0.128	0.122	0.116	0.111	0.106	0.101	0.095	0.090	0.085	0.081
200	0.175	0.168	0.162	0.156	0.150	0.145	0.140	0.132	0.124	0.118	0.112	0.106	0.101	0.097	0.093	0.087	0.082	0.078	0.074
210	0.161	0.155	0.149	0.143	0.138	0.134	0.129	0.121	0.114	0.108	0.102	0.097	0.093	0.089	0.085	0.080	0.075	0.071	0.068
220	0.149	0.143	0.138	0.133	0.128	0.123	0.119	0.112	0.105	0.100	0.094	0.090	0.086	0.082	0.078	0.074	0.069	0.066	0.062
230	0.138	0.133	0.128	0.123	0.118	0.114	0.110	0.104	0.097	0.092	0.087	0.083	0.079	0.075	0.072	0.068	0.064	0.061	0.058
240	0.129	0.123	0.119	0.114	0.110	0.106	0.103	0.096	0.090	0.085	0.081	0.077	0.073	0.070	0.067	0.063	0.059	0.056	0.053
250	0.120	0.115	0.110	0.106	0.102	0.099	0.095	0.089	0.084	0.079	0.075	0.071	0.068	0.065	0.062	0.058	0.055	0.052	0.049

Table 9 (a) Design Compressive Stress, f_{cd} (MPa) For Column Buckling Class a

(*Clause* 13.1.2.1)

KL/r	Yield Stress, f_y (MPa)																		
↓	200	210	220	230	240	250	260	280	300	320	340	360	380	400	420	450	480	510	[redacted]
10	182	191	200	213	218	227	236	255	273	291	309	327	345	364	382	409	436	464	491
20	182	191	200	208	217	226	235	252	270	287	305	322	339	357	374	400	425	451	476
30	178	186	195	203	212	220	229	245	262	279	295	311	328	344	360	384	408	431	454
40	173	181	189	197	205	213	221	237	253	268	283	298	313	328	342	363	384	405	425
50	168	176	183	191	198	205	213	227	241	255	268	281	294	306	318	336	352	368	383
60	162	169	175	182	189	195	202	214	226	237	248	258	268	278	286	299	310	320	329
70	154	160	166	171	177	182	188	197	207	215	223	230	237	243	249	256	263	268	274
80	144	149	154	158	163	167	171	178	184	190	195	199	204	207	210	215	219	222	225
90	133	137	140	143	146	149	152	157	161	164	168	170	173	175	177	179	182	184	185
100	120	123	125	128	130	132	133	136	139	141	143	145	146	148	149	151	152	153	154
110	107	109	111	112	114	115	116	118	120	121	123	124	125	126	127	128	129	129	130
120	95.5	96.7	97.9	98.9	100	101	101	103	104	105	106	107	107	108	109	109	110	110	111
130	84.6	85.5	86.3	87	87.7	88.3	88.8	89.8	90.6	91.3	92.0	92.5	93.0	93.5	93.9	94.4	94.9	95.3	95.7
140	75.2	75.8	76.4	76.9	77.4	77.8	78.2	78.9	79.5	80.0	80.5	80.9	81.3	81.6	81.9	82.3	82.6	83.0	83.2
150	67.0	67.4	67.9	68.2	68.6	68.9	69.2	69.7	70.2	70.6	70.9	71.2	71.5	71.8	72.0	72.3	72.6	72.9	73.1
160	59.9	60.3	60.6	60.9	61.1	61.4	61.6	62.0	62.4	62.7	62.9	63.2	63.4	63.6	63.8	64.0	64.3	64.5	64.6
170	53.8	54.1	54.3	54.6	54.8	55.0	55.1	55.5	55.7	56.0	56.2	56.4	56.6	56.7	56.9	57.1	57.3	57.4	57.6
180	48.6	48.8	49.0	49.2	49.3	49.5	49.6	49.9	50.1	50.3	50.5	50.6	50.8	50.9	51.0	51.2	51.3	51.5	51.6
190	44.0	44.2	44.3	44.5	44.6	44.7	44.9	45.1	45.3	45.4	45.6	45.7	45.8	45.9	46.0	46.2	46.3	46.4	46.5
200	40.0	40.2	40.3	40.4	40.5	40.7	40.7	40.9	41.1	41.2	41.3	41.4	41.5	41.6	41.7	41.8	41.9	42.0	42.1
210	36.6	36.7	36.8	36.9	37.0	37.1	37.2	37.3	37.4	37.6	37.7	37.8	37.8	37.9	38.0	38.1	38.2	38.3	38.3
220	33.5	33.6	33.7	33.8	33.9	34.0	34.0	34.2	34.3	34.4	34.5	34.5	34.6	34.7	34.7	34.8	34.9	35.0	35.0
230	30.8	30.9	31.0	31.1	31.2	31.2	31.3	31.4	31.5	31.6	31.6	31.7	31.8	31.8	31.9	31.9	32.0	32.1	32.1
240	28.5	28.5	28.6	28.7	28.7	28.8	28.8	28.9	29.0	29.1	29.1	29.2	29.3	29.3	29.4	29.4	29.5	29.5	29.6
250	26.3	26.4	26.5	26.5	26.6	26.6	26.7	26.7	26.8	26.9	26.9	27.0	27.0	27.1	27.1	27.2	27.2	27	[redacted]

Table 9 (b) Design Compressive Stress, f_{cd} (MPa) for Column Buckling Class b

(*Clause* 13.1.2.1)

KL/r	Yield Stress, f_y (MPa)																		
↓	200	210	220	230	240	250	260	280	300	320	340	360	380	400	420	450	480	510	540
10	182	191	200	209	218	227	236	255	273	291	309	327	345	364	382	409	436	464	491
20	182	190	199	208	217	225	234	251	268	285	302	319	336	353	369	394	419	443	468
30	175	183	192	200	208	216	224	240	256	271	287	302	318	333	348	370	392	414	435
40	168	176	183	191	198	206	213	228	242	256	270	283	297	310	323	342	360	378	395
50	161	167	174	181	188	194	201	214	226	238	250	261	272	283	293	308	322	335	347
60	152	158	164	170	176	181	187	197	207	217	226	235	243	251	259	269	279	287	295
70	142	147	152	157	162	166	171	179	187	194	201	207	213	218	223	230	236	241	246
80	131	135	139	143	147	150	154	160	165	170	175	179	183	186	190	194	198	201	204
90	120	123	126	129	131	134	136	141	144	148	151	154	156	159	161	163	166	168	170
100	108	110	112	114	116	118	120	123	126	128	130	132	134	135	137	139	140	142	143
110	96.5	98.3	100	101	103	104	105	107	109	111	112	114	115	116	117	118	119	121	121
120	86.2	87.5	88.6	89.7	90.7	91.7	92.5	94.1	95.4	96.6	97.7	98.6	100	100	101	102	103	104	104
130	76.9	77.8	78.7	79.5	80.3	81.0	81.6	82.7	83.7	84.6	85.4	86.1	86.8	87.3	87.9	88.6	89.2	89.8	90.3
140	68.7	69.4	70.1	70.7	71.3	71.8	72.3	73.1	73.9	74.6	75.2	75.7	76.2	76.6	77.1	77.6	78.1	78.5	78.9
150	61.6	62.1	62.6	63.1	63.6	64.0	64.3	65.0	65.6	66.1	66.6	67.0	67.4	67.7	68.1	68.5	68.9	69.2	69.5
160	55.4	55.8	56.2	56.6	56.9	57.3	57.5	58.1	58.5	59.0	59.3	59.7	60.0	60.3	60.5	60.9	61.2	61.5	61.7
170	50.0	50.3	50.7	51.0	51.2	51.5	51.7	52.2	52.5	52.9	53.2	53.5	53.7	53.9	54.1	54.4	54.7	54.9	55.1
180	45.3	45.6	45.9	46.1	46.3	46.5	46.7	47.1	47.4	47.7	47.9	48.1	48.3	48.5	48.7	48.9	49.2	49.3	49.5
190	41.2	41.5	41.7	41.9	42.1	42.2	42.4	42.7	42.9	43.2	43.4	43.6	43.7	43.9	44.0	44.2	44.4	44.6	44.7
200	37.6	37.8	38.0	38.2	38.3	38.5	38.6	38.9	39.1	39.3	39.5	39.6	39.8	39.9	40.0	40.2	40.3	40.5	40.6
210	34.5	34.7	34.8	35.0	35.1	35.2	35.3	35.5	35.7	35.9	36.0	36.2	36.3	36.4	36.5	36.6	36.8	36.9	37.0
220	31.7	31.9	32.0	32.1	32.2	32.3	32.4	32.6	32.8	32.9	33.0	33.1	33.2	33.3	33.4	33.6	33.7	33.8	33.9
230	29.2	29.4	29.5	29.6	29.7	29.8	29.9	30.0	30.1	30.3	30.4	30.5	30.6	30.7	30.7	30.8	30.9	31.0	31.1
240	27.1	27.2	27.3	27.3	27.4	27.5	27.6	27.7	27.8	27.9	28.0	28.1	28.2	28.3	28.3	28.4	28.5	28.6	28.7
250	25.1	25.2	25.3	25.3	25.4	25.5	25.6	25.7	25.8	25.9	26.0	26.0	26.1	26.2	26.2	26.3	26.4	26	[redacted]

Table 9 (c) Design Compressive Stress, f_{cd} (MPa) for Column Buckling Class c

(*Clause* 13.1.2.1)

KL/r	Yield Stress, f_y, (MPa)																		
↓	200	210	220	230	240	250	260	280	300	320	340	360	380	400	420	450	480	510	540
10	182	191	200	209	218	227	236	255	273	291	309	327	345	364	382	409	436	464	491
20	182	190	199	207	216	224	233	250	266	283	299	316	332	348	364	388	412	435	458
30	172	180	188	196	204	211	219	234	249	264	278	293	307	321	335	355	376	395	415
40	163	170	177	184	191	198	205	218	231	244	256	268	280	292	304	320	337	352	367
50	153	159	165	172	178	183	189	201	212	222	232	242	252	261	270	282	295	306	317
60	142	148	153	158	163	168	173	182	191	199	207	215	222	228	235	244	252	260	267
70	131	136	140	144	148	152	156	163	170	176	182	187	192	197	202	208	213	218	223
80	120	123	127	130	133	136	139	145	149	154	158	162	165	169	172	176	180	183	186
90	108	111	114	116	119	121	123	127	131	134	137	140	142	144	146	149	152	154	156
100	97.5	100	102	104	105	107	109	112	114	116	119	120	122	124	125	127	129	131	132
110	87.3	89.0	90.5	92.0	93.3	94.6	95.7	97.9	100	102	103	104	106	107	108	110	111	112	113
120	78.2	79.4	80.6	81.7	82.7	83.7	84.6	86.2	87.6	88.9	90.1	91.1	92.1	93.0	93.8	94.9	95.9	96.8	97.6
130	70.0	71.0	71.9	72.8	73.5	74.3	75.0	76.2	77.3	78.3	79.2	80.0	80.7	81.4	82.0	82.9	83.6	84.3	84.9
140	62.9	63.6	64.4	65.0	65.6	66.2	66.7	67.7	68.6	69.3	70.0	70.7	71.2	71.8	72.3	72.9	73.5	74.1	74.6
150	56.6	57.2	57.8	58.3	58.8	59.2	59.7	60.4	61.1	61.7	62.3	62.8	63.3	63.7	64.1	64.6	65.1	65.5	65.9
160	51.1	51.6	52.1	52.5	52.9	53.3	53.6	54.2	54.8	55.3	55.7	56.1	56.5	56.9	57.2	57.6	58.0	58.4	58.7
170	46.4	46.8	47.1	47.5	47.8	48.1	48.4	48.9	49.3	49.8	50.1	50.5	50.8	51.1	51.3	51.7	52.0	52.3	52.6
180	42.2	42.5	42.8	43.1	43.4	43.6	43.9	44.3	44.7	45.0	45.3	45.6	45.8	46.1	46.3	46.6	46.9	47.1	47.3
190	38.5	38.8	39.0	39.3	39.5	39.7	39.9	40.3	40.6	40.9	41.1	41.4	41.6	41.8	42.0	42.2	42.5	42.7	42.9
200	35.3	35.5	35.7	35.9	36.1	36.3	36.5	36.8	37.0	37.3	37.5	37.7	37.9	38.1	38.2	38.4	38.6	38.8	39.0
210	32.4	32.6	32.8	33.0	33.1	33.3	33.4	33.7	33.9	34.1	34.3	34.5	34.7	34.8	34.9	35.1	35.3	35.4	35.6
220	29.9	30.1	30.2	30.4	30.5	30.6	30.8	31.0	31.2	31.4	31.5	31.7	31.8	31.9	32.1	32.2	32.4	32.5	32.6
230	27.6	27.8	27.9	28.0	28.2	28.3	28.4	28.6	28.8	28.9	29.1	29.2	29.3	29.4	29.5	29.7	29.8	29.9	30.0
240	25.6	25.7	25.9	26.0	26.1	26.2	26.3	26.4	26.6	26.7	26.9	27.0	27.1	27.2	27.3	27.4	27.5	27.6	27.7
250	23.8	23.9	24.0	24.1	24.2	24.3	24.4	24.5	24.7	24.8	24.9	25.0	25.1	25.2	25.3	25.4	25.5	25.6	25.7

Table 9 (d) Design Compressive Stress, f_{cd} (MPa) for Column Buckling Class d

(*Clause* 13.1.2.1)

KL/r	Yield Stress, f_y (MPa)																		
↓	200	210	220	230	240	250	260	280	300	320	340	360	380	400	420	450	480	510	540
10	182	191	200	209	218	227	236	255	273	291	309	327	345	364	382	409	436	464	491
20	182	190	198	206	215	223	231	247	263	279	294	310	325	340	355	377	399	421	442
30	168	175	182	189	197	204	211	224	238	251	264	277	290	302	314	332	350	367	384
40	154	161	167	173	179	185	191	203	214	225	235	246	256	266	275	289	303	316	328
50	141	147	152	157	162	167	172	182	191	199	208	216	224	231	238	249	258	268	277
60	129	133	137	142	146	150	154	161	168	175	182	188	193	199	204	212	219	225	231
70	116	120	124	127	130	133	137	142	148	153	158	162	167	171	174	180	184	189	193
80	105	108	111	113	116	118	121	125	129	133	137	140	143	146	149	153	156	159	162
90	94.1	96.4	98.6	101	103	105	107	110	113	116	119	121	123	126	128	130	133	135	137
100	84.3	86.2	87.9	89.6	91.1	92.6	94.0	96.7	99.1	101	103	105	107	108	110	112	114	116	117
110	75.6	77.0	78.4	79.7	81.0	82.1	83.2	85.3	87.1	88.8	90.4	91.8	93.1	94.4	95.5	97.1	98.5	100	101
120	67.8	69.0	70.1	71.1	72.1	73.0	73.9	75.5	77.0	78.3	79.5	80.6	81.7	82.6	83.5	84.7	85.8	86.9	87.8
130	61.0	62.0	62.8	63.7	64.5	65.2	65.9	67.2	68.3	69.4	70.4	71.2	72.1	72.8	73.5	74.5	75.4	76.2	76.9
140	55.0	55.8	56.5	57.2	57.8	58.4	59.0	60.0	61.0	61.8	62.6	63.3	64.0	64.6	65.2	66.0	66.7	67.3	67.9
150	49.8	50.4	51.0	51.6	52.1	52.6	53.1	53.9	54.7	55.4	56.0	56.6	57.2	57.7	58.1	58.8	59.3	59.9	60.4
160	45.2	45.7	46.2	46.7	47.1	47.5	47.9	48.6	49.3	49.9	50.4	50.9	51.3	51.7	52.1	52.7	53.1	53.6	54.0
170	41.2	41.6	42.1	42.4	42.8	43.1	43.5	44.1	44.6	45.1	45.5	45.9	46.3	46.7	47.0	47.4	47.8	48.2	48.6
180	37.7	38.0	38.4	38.7	39.0	39.3	39.6	40.1	40.5	41.0	41.3	41.7	42.0	42.3	42.6	43.0	43.3	43.6	43.9
190	34.5	34.9	35.2	35.4	35.7	35.9	36.2	36.6	37.0	37.4	37.7	38.0	38.2	38.5	38.7	39.1	39.4	39.6	39.9
200	31.8	32.0	32.3	32.5	32.8	33.0	33.2	33.6	33.9	34.2	34.5	34.7	35.0	35.2	35.4	35.7	35.9	36.2	36.4
210	29.3	29.6	29.8	30.0	30.2	30.4	30.5	30.9	31.2	31.4	31.7	31.9	32.1	32.3	32.5	32.7	32.9	33.1	33.3
220	27.1	27.3	27.5	27.7	27.9	28.0	28.2	28.5	28.7	29.0	29.2	29.4	29.6	29.7	29.9	30.1	30.3	30.5	30.6
230	25.2	25.3	25.5	25.7	25.8	26.0	26.1	26.4	26.6	26.8	27.0	27.1	27.3	27.5	27.6	27.8	27.9	28.1	28.2
240	23.4	23.6	23.7	23.9	24.0	24.1	24.2	24.5	24.7	24.8	25.0	25.2	25.3	25.4	25.5	25.7	25.9	26.0	26.1
250	21.8	22.0	22.1	22.2	22.3	22.5	22.6	22.8	22.9	23.1	23.2	23.4	23.5	23.6	23.7	23.9	24.0	24.1	24.2

Table 10 Buckling Class of Cross-Sections

(*Clause* 13.1.2.2)

Cross-Section (1)	Limits (2)	Buckling About Axis (3)	Buckling Class (4)
Rolled I-Sections 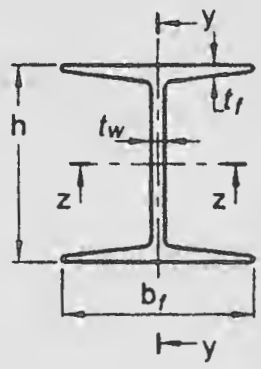	$h/b_f > 1.2$:		
	$t_f \leq 40$ mm	*z-z*	a
		y-y	b
	40 mm < $t_f \leq 100$ mm	*z-z*	b
		y-y	c
	$h/b_f \leq 1.2$:		
	$t_f \leq 100$ mm	*z-z*	b
		y-y	c
	$t_f > 100$ mm	*z-z*	d
		y-y	d
Welded I-Section 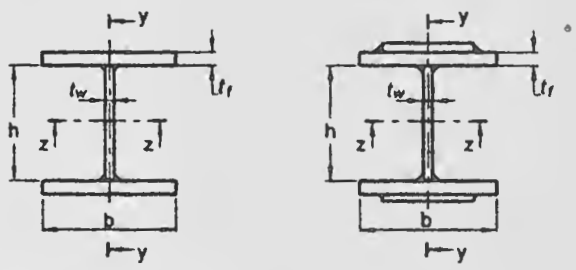	$t_f \leq 40$ mm	*z-z*	b
		y-y	c
	$t_f > 40$ mm	*z-z*	c
		y-y	d
Hollow Section	Hot rolled	Any	a
	Cold formed	Any	b
Welded Box Section 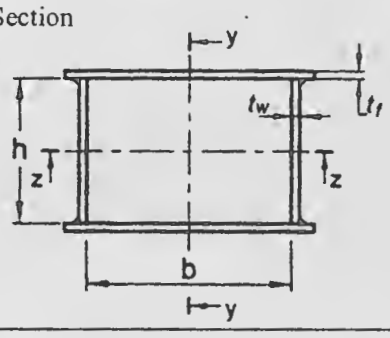	Generally (except as below)	Any	b
	Thick welds and		
	$b/t_f < 30$	*z-z*	c
	$h/t_w < 30$	*y-y*	c
Channel, Angle, T and Solid Sections		Any	b
Built-up Member 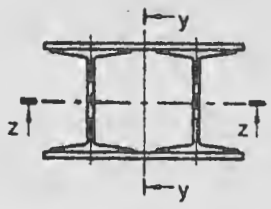		Any	c

Table 11 Effective Length of Prismatic Compression Members

(*Clause* 13.2.2)

Boundary Conditions				Schematic Representation	Effective Length
At One End		At the Other End			
Translation (1)	Rotation (2)	Translation (3)	Rotation (4)	(5)	(6)
Restrained	Restrained	Free	Free		2.0*L*
Restrained	Free	Free	Restrained		
Restrained	Free	Restrained	Free		1.0*L*
Restrained	Restrained	Free	Restrained		1.2*L*
Restrained	Restrained	Restrained	Free		0.8*L*
Restrained	Restrained	Restrained	Restrained		0.65*L*

NOTE — *L* is the unsupported length of the compression member (*see* **13.2.1**).

constituent plate elements shall satisfy the width-thickness ratio requirements specified in Table 2.

13.3.2 *Effective Sectional Area, A_e*

Except as modified in **9.7.2** (Class 4), the gross sectional area shall be taken as the effective sectional area for all compression members fabricated by welding, bolting and riveting so long as the section is semi-compact or better. Holes not fitted with rivets, bolts or pins shall be deducted from gross area to calculate effective sectional area.

13.3.3 *Eccentricity for Stanchions and Columns*

13.3.3.1 For the purpose of determining the stress in a stanchion or column section, the beam reactions or similar loads shall be assumed to be applied at an eccentricity of 100 mm from the face of the section or at the center of bearing whichever dimension gives the greater eccentricity, and with the exception of the following two cases:

a) In the case of cap connection, the load shall be assumed to be applied at the face of the column or stanchion section or at the edge of packing, if used towards the span of the beam.

b) In the case of a roof truss bearing on a cap, no eccentricity be taken for simple bearings without connections capable of developing any appreciable moment. In case of web member connection with face, actual eccentricity is to be considered.

13.3.3.2 In continuous columns, the bending moments due to eccentricities of loading on the columns at any floor may be divided equally between the columns above and below that floor level, provided that the moment of inertia of one column section, divided by its effective length does not exceed 1.5 times the corresponding value of the other column. Where this ratio is exceeded, the bending moment shall be divided in proportion to the moment of inertia of the column sections divided by their respective effective lengths.

13.3.4 *Splices*

13.3.4.1 Where the ends of compression members are prepared for bearing over the whole area, they shall be spliced to hold the connected members accurately in position, and to resist bending or tension, if present. Such splices should maintain the intended member stiffness about each axis. Splices should be located as close to the point of inflection as possible. Otherwise their capacity should be adequate to carry magnified moment (*see* **15.3.2.2**). The ends of compression members faced for bearing shall invariably be machined to ensure perfect contact of surfaces in bearing.

13.3.4.2 Where such members are not faced for complete bearing, the splices shall be designed to transmit all the forces to which the members are subjected.

13.3.4.3 Wherever possible, splices shall be proportioned and arranged so that the centroidal axis of the splice coincides as nearly as possible with the centroidal axes of the members being jointed, in order to avoid eccentricity; but where eccentricity is present in the joint, the resulting stress shall be accounted for.

13.4 Column Bases

13.4.1 *General*

Column bases should have sufficient stiffness and strength to transmit axial force, bending moments and shear forces at the base of the columns to their foundation without exceeding the load carrying capacity of the supports. Anchor bolts and shear keys should be provided wherever necessary. Shear resistance at the proper contact surface between steel base and concrete/grout may be calculated using a friction coefficient of 0.45.

The nominal bearing pressure between the base plate and the support below may be determined on the basis of linearly varying distribution of pressure. The maximum bearing pressure on concrete under the limit states design load should not exceed the bearing strength equal to $0.45 f_{ck}\left[\sqrt{(A_1/A_2)}\right]$ and $0.9 f_{ck}$, whichever is smaller, where f_{ck} is the smaller of characteristic cube strength of concrete or bedding material, A_1 is the area of concrete pedestal on which the base plate is sitting, and A_2 is the surface area of the steel base plate transferring the load to the concrete pedestal.

13.4.1.1 If the size of the base plate is larger than that required to limit the bearing pressure on the base support, an equal projection c of the base plate beyond the face of the column and gusset may be taken as effective in transferring the column load as given in Fig. 9, such that bearing pressure on the effective area does not exceed bearing capacity of concrete base.

13.4.2 *Gusseted Bases*

For stanchion with gusseted bases, the gusset plates, angle cleats, stiffeners, fastenings, etc, in combination with the bearing area of the shaft, shall be sufficient to take the loads, bending moments and reactions to the base plate without exceeding specified strength. All the bearing surfaces shall be machined to ensure perfect contact.

13.4.2.1 Where the ends of the column shaft and the gusset plates are not faced for complete bearing, the welds, fastenings connecting them to the base plate shall be sufficient to transmit all the forces to which the base is subjected.

13.4.2.2 *Column and base plate connections*

Where the end of the column is connected directly to the base plate by means of full penetration butt welds, the connection shall be deemed to transmit to the base all the forces and moments to which the column is subjected.

13.4.3 *Slab Bases*

Columns with slab bases need not be provided with gussets, but sufficient fastenings shall be provided to retain the parts securely in place and to resist all moments and forces, other than direct compression, including those arising during transit, unloading and erection.

13.4.3.1 The minimum thickness, t_s, of rectangular slab bases, supporting columns under axial compression shall be:

$$t_s = \sqrt{2.5w(a^2 - 0.3b^2)\gamma_{m0} / f_y} > t_f$$

where

w = uniform pressure from below on the slab base under the factored load axial compression;

a, b = larger and smaller projection, respectively of the slab base beyond the rectangle circumscribing the column; and

t_f = flange thickness of compression member.

When only the effective area of the base plate is used as in **13.4.1.1**, c^2 may be used in the above equation (*see* Fig. 9) instead of $(a^2 - 0.3b^2)$.

13.4.3.2 When the slab does not distribute the column load uniformly, due to eccentricity of the load etc, special calculation shall be made to show that the base is adequate to resist the moment due to the non-uniform pressure from below.

13.4.3.3 Bases for bearing upon concrete or masonry need not be machined on the underside.

13.4.3.4 In cases where the cap or base is fillet welded directly to the end of the column without boring and shouldering, the contact surfaces shall be machined to give a perfect bearing and the welding shall be sufficient to transmit the forces as required in **13.4.3**. Where full strength butt welds are provided, machining of contact surfaces is not required.

13.5 Angle Struts

13.5.1 *Single Angle Struts*

The compression in single angles may be transferred either concentrically to its centroid through the end connections or eccentrically by connecting one of its legs to a gusset or adjacent member.

13.5.1.1 *Concentric loading*

When a single angle is concentrically loaded in compression, the design strength may be evaluated using **13.1.2**, by calculating the non-dimensional slenderness ratio, λ_{vv}, for buckling about the minor axis, *v-v*, as given by:

$$\lambda_{vv} = \frac{\left(\dfrac{l_{vv}}{r_{vv}}\right)}{\varepsilon\sqrt{\dfrac{\pi^2 E}{250}}}$$

l_{vv} = Laterally unsupported length preventing translation normal to the minor axis

r_{vv} = radius of gyration of the angle section about the minor axis

13.5.1.2 *Loaded through one leg*

The design strength of single angle members loaded in compression through one of its legs is affected by flexural torsional buckling and bending. The design compressive strength of such eccentrically loaded angle members, *in lieu of* a more exact second order design under combined bending axial compression, may be evaluated approximately as given below.

The design compressive strength, of single angles loaded through gusset connection to one leg parallel to the *a-a* axis (*a-a* axis being either the *z-z* or the *y-y* axis, depending on which leg is connected to the gusset) of the member may be calculated as:

$$f_{cde} = K_f \chi_{aa} f_y / \gamma_{m0}$$

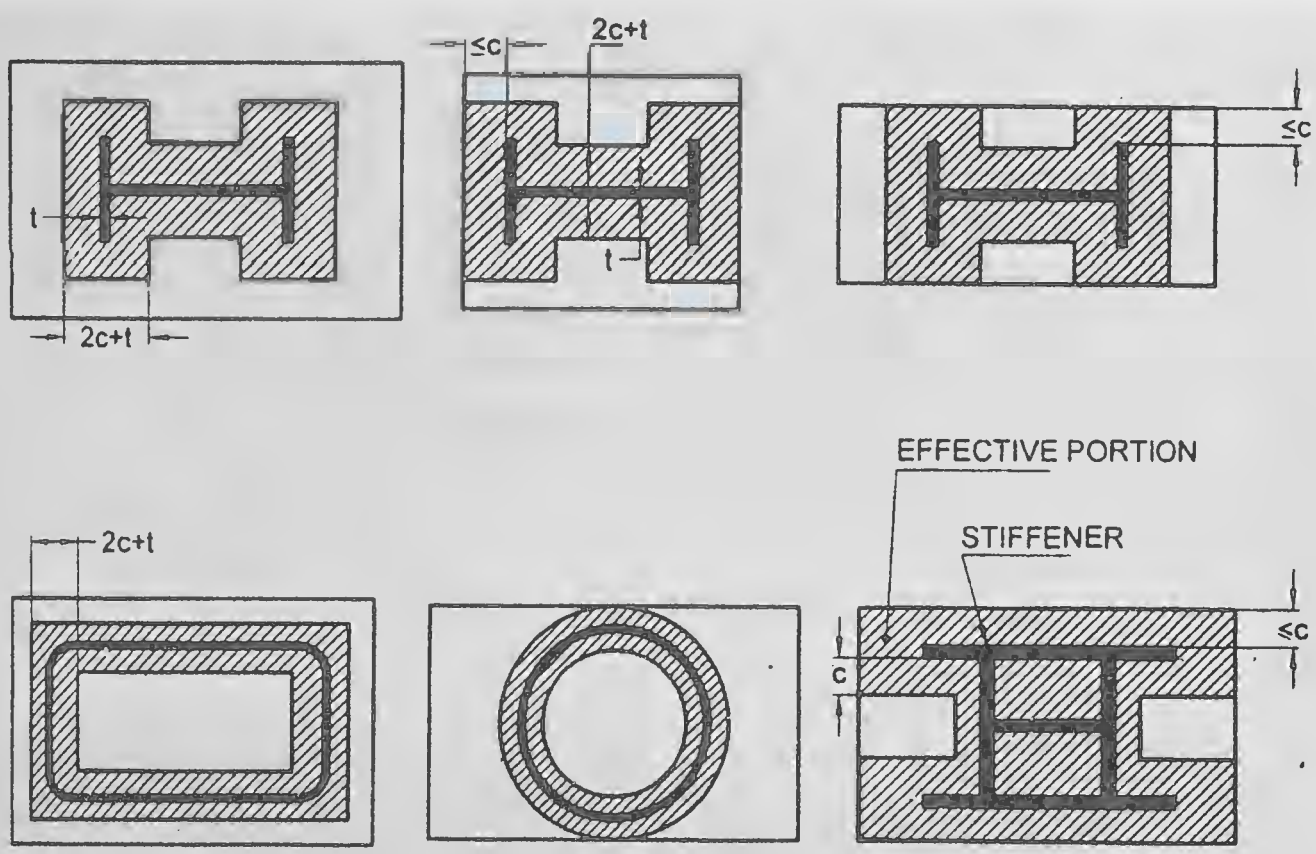

FIG. 9 EFFECTIVE AREA OF BASE PLATE

where

χ_{aa} = Stress reduction factor (*see* Table 8) for buckling class 'b', calculated as per **13.1.12.1**, using the non-dimensional slenderness ratio, λ_{aa}.

$$K_f = k_1 + k_2\lambda_{aa} + k_3\lambda_f,$$

where

K_f = modification factor to account for eccentric end connection

k_1, k_2, k_3 = constants depending upon the end condition, as given in Table 12,

$$\lambda_{aa} = \frac{\left(\frac{l_{aa}}{r_{aa}}\right)}{\varepsilon\sqrt{\frac{\pi^2 E}{250}}}$$

$$\lambda_{\varphi} = \frac{(b_1 + b_2)/2t}{\varepsilon\sqrt{\frac{\pi^2 E}{250}}}$$

l_{aa} = centre-to-centre length of the lateral support preventing translation of the member perpendicular to *a-a* axis (*a-a* axis being either the *z-z* or the *y-y* axis, depending on which leg is connected to the gusset),

r_{aa} = radius of gyration of the angle member about the *a-a* axis (*a-a* axis being either the *z-z* or the *y-y* axis, depending on which leg is connected to the gusset), parallel to the plane of the end gusset plates,

b_1, b_2 = width of the connected and outstanding legs of the angle, respectively.

t = thickness of the leg, and

ε = yield stress ratio, $\sqrt{\frac{250}{f_y}}$, f_y being in MPa

Table 12 Constants k_1, k_2, and k_3

(*Clause* 13.5.1.2)

Sl No.	End Connection	Gusset/ Connecting Member Fixity[1)]	k_1	k_2	k_3
(1)	(2)	(3)	(4)	(5)	(6)
i)	Fully welded or connected with two or more bolts	Fixed	0.798	0.563	-2.072
		Hinged	0.401	0.420	-1.040
ii)	Single bolt	Fixed	0.418	0.547	-1.400
		Hinged	0.374	0.415	-2.072

[1)] In-plane rotational restraint provided to the gusset by the supporting member. For partial restraint, k_f can be interpolated between the results for fixed and hinged cases.

13.5.2 *Double Angle Struts*

13.5.2.1 For double angle discontinuous struts, connected back to back, on opposite sides of the gusset or a section, by not less than two bolts or rivets in line along the angles at each end, or by the equivalent in welding, the load may be regarded as applied axially. The effective length, *KL*, in the plane of end gusset shall be taken as between 0.7 and 0.85 times the distance between intersections, depending on the degree of the restraint provided. The effective length, *KL*, in the plane perpendicular to that of the end gusset, shall be taken as equal to the distance between centers of intersections. The calculated average compressive stress shall not exceed the values based on **13.1.2**. The angles shall be connected together over their lengths so as to satisfy the requirements of **13.8** and **16.2.5**.

13.5.2.2 Double angle discontinuous struts connected back-to-back, to one side of a gusset or section by one or more bolts or rivets in each angle, or by the equivalent in welding, shall be designed in accordance with **13.5.1** and the angles shall be connected together over their lengths so as to satisfy the requirements of **13.8** and **16.2.5**.

13.5.3 *Continuous Members*

Double angle continuous struts such as those forming the flanges, chords or ties of trusses or trussed girders, or the legs of towers shall be designed as axially loaded compression members, and the effective length shall be taken in accordance with **13.2.4**.

13.5.4 *Combined Stresses*

In addition to axial loads, if the struts carry loads which cause transverse bending, the combined bending and axial stresses shall be checked in accordance with **14.3**. For determining the permissible axial and bending stresses, the effective length shall be taken in accordance with the **13.2** and **14.3**.

13.6 Laced Columns

13.6.1 *General*

13.6.1.1 Members comprising two main components laced and tied, should where practicable, have a radius of gyration about the axis perpendicular to the plane of lacing not less than the radius of gyration about the axis parallel to the plane of lacing [*see* Fig.10A and Fig. 10B].

13.6.1.2 As far as practicable, the lacing system shall be uniform throughout the length of the column.

13.6.1.3 Except for tie plates as specified in **13.7**, double laced systems [*see* Fig. 10B] and single laced systems [*see* Fig. 10A] on opposite sides of the main components shall not be combined with cross members (ties) perpendicular to the longitudinal axis of the strut [*see* Fig. 10C], unless all forces resulting from deformation of the strut members are calculated and provided for in the design of lacing and its fastenings.

13.6.1.4 Single laced systems, on opposite faces of the components being laced together shall preferably be in the same direction so that one is the shadow of the other, instead of being mutually opposed in direction.

13.6.1.5 The effective slenderness ratio, $(KL/r)_e$, of laced columns shall be taken as 1.05 times the $(KL/r)_0$, the actual maximum slenderness ratio, in order to account for shear deformation effects.

13.6.2 *Width of Lacing Bars*

In bolted/riveted construction, the minimum width of lacing bars shall be three times the nominal diameter of the end bolt/rivet.

13.6.3 *Thickness of Lacing Bars*

The thickness of flat lacing bars shall not be less than one-fortieth of its effective length for single lacings and one-sixtieth of the effective length for double lacings.

13.6.3.1 Rolled sections or tubes of equivalent strength may be permitted instead of flats, for lacings.

13.6.4 *Angle of Inclination*

Lacing bars, whether in double or single systems, shall be inclined at an angle not less than 40° nor more than 70° to the axis of the built-up member.

13.6.5 *Spacing*

13.6.5.1 The maximum spacing of lacing bars, whether connected by bolting, riveting or welding, shall also be such that the maximum slenderness ratio of the components of the main member (a_1/r_1), between consecutive lacing connections is not greater than 50 or 0.7 times the most unfavourable slenderness ratio of the member as a whole, whichever is less, where a_1 is the unsupported length of the individual member between lacing points, and r_1 is the minimum radius of gyration of the individual member being laced together.

13.6.5.2 Where lacing bars are not lapped to form the connection to the components of the members, they shall be so connected that there is no appreciable interruption in the triangulation of the system.

13.6.6 *Design of Lacings*

13.6.6.1 The lacing shall be proportioned to resist a total transverse shear, V_t, at any point in the member, equal to at least 2.5 percent of the axial force in the member and shall be divided equally among all transverse-lacing systems in parallel planes.

13.6.6.2 For members carrying calculated bending stress due to eccentricity of loading, applied end moments and/or lateral loading, the lacing shall be proportioned to resist the actual shear due to bending, in addition to that specified in **13.6.6.1**.

13.6.6.3 The slenderness ratio, KL/r, of the lacing bars shall not exceed 145. In bolted/riveted construction, the effective length of lacing bars for the determination of the design strength shall be taken as the length between the inner end fastener of the bars for single lacing, and as 0.7 of this length for double lacings effectively connected at intersections. In welded construction, the effective lengths shall be taken as 0.7 times the distance between the inner ends of welds connecting the single lacing bars to the members.

NOTE — The required section for lacing bars as compression/tension members shall be determined by using the appropriate design stresses, f_{cd} subject to the requirements in **13.6.3** to **13.6.6** and T_d in **12.1**.

13.6.7 *Attachment to Main Members*

The bolting, riveting or welding of lacing bars to the main members shall be sufficient to transmit the force calculated in the bars. Where welded lacing bars overlap the main members, the amount of lap measured along either edge of the lacing bar shall be not less than four times the thickness of the bar or the thickness of the element of the members to which it is connected,

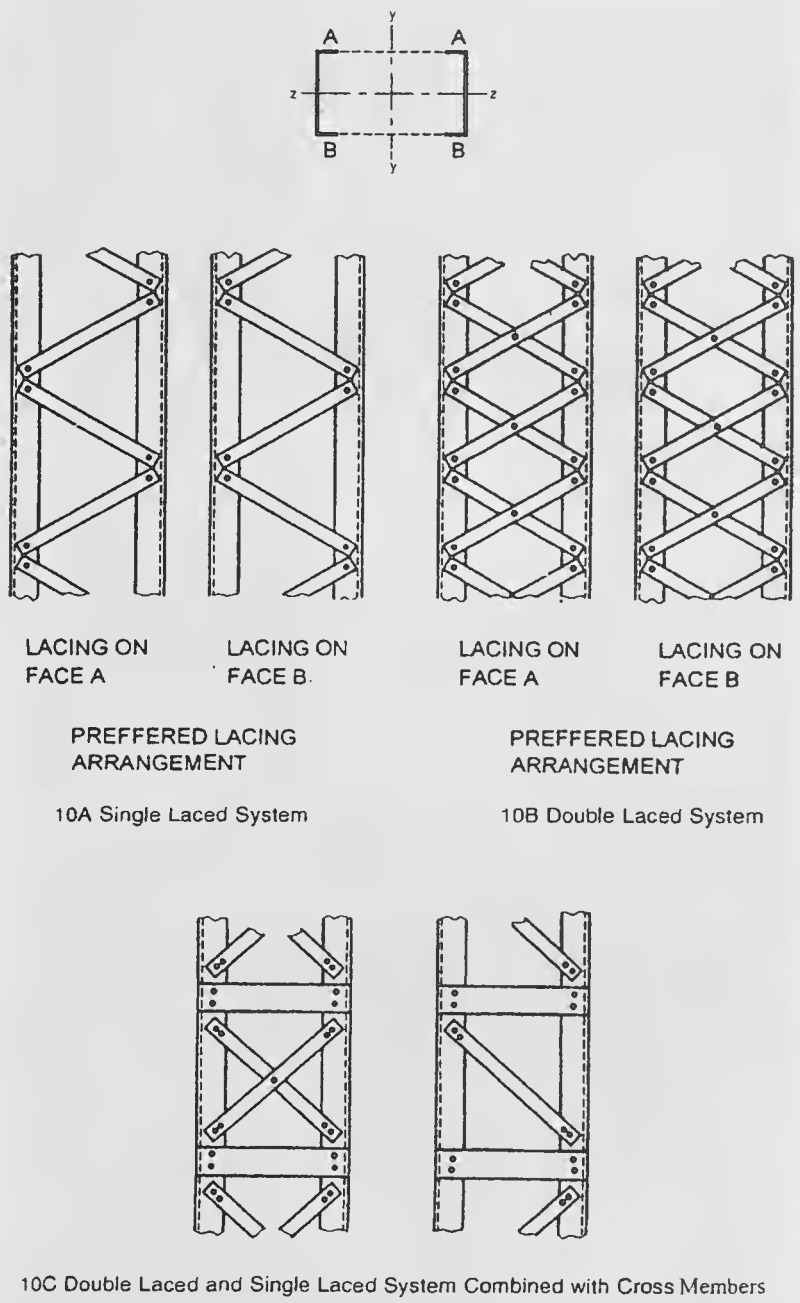

FIG. 10 TOP RESTRAINT CONDITIONS

whichever is less. The welding should be sufficient to transmit the load in the bar and shall, in any case, be provided along each side of the bar for the full length of lap.

13.6.8 *End Tie Plates*

Laced compression members shall be provided with tie plates as per **13.7** at the ends of lacing systems and at intersection with other members/stays and at points where the lacing systems are interrupted.

13.7 Battened Columns

13.7.1 *General*

13.7.1.1 Compression members composed of two main components battened should preferably have the individual members of the same cross-section and symmetrically disposed about their major axis. Where practicable, the compression members should have a radius of gyration about the axis perpendicular to the plane of the batten not less than the radius of gyration about the axis parallel to the plane of the batten (*see* Fig. 11).

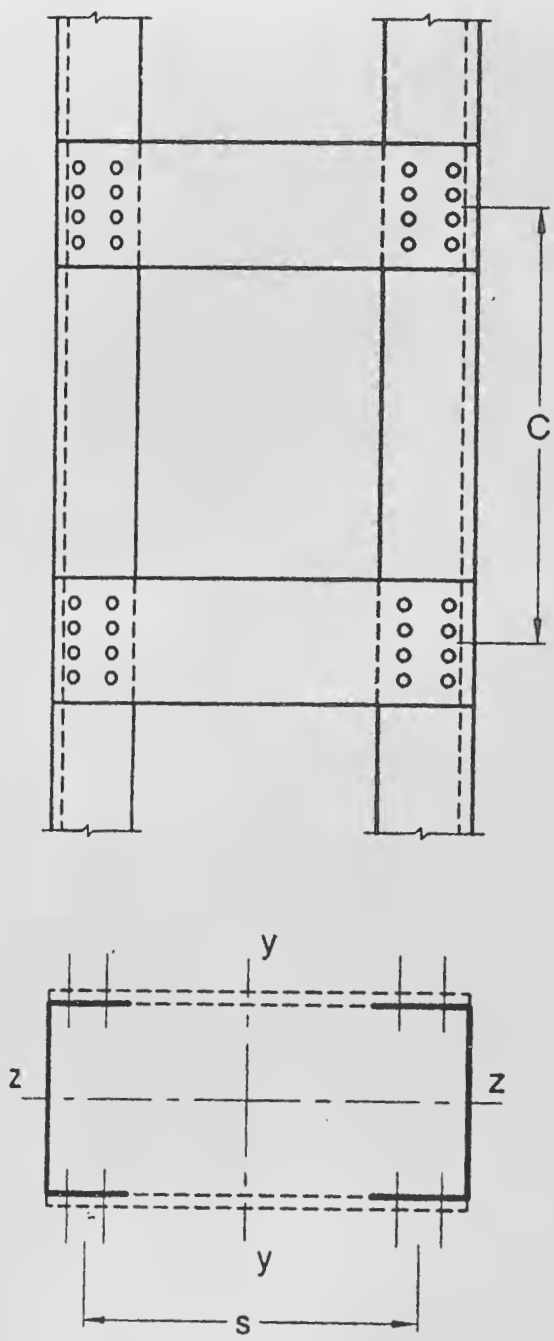

FIG. 11 BATTEN COLUMN SECTION

13.7.1.2 Battened compression members, not complying with the requirements specified in this Section or those subjected to eccentricity of loading, applied moments or lateral forces in the plane of the battens (*see* Fig. 11), shall be designed according to the exact theory of elastic stability or empirically, based on verification by tests.

NOTE — If the column section is subjected to eccentricity or other moments about an axis perpendicular to battens, the battens and the column section should be specially designed for such moments and shears.

13.7.1.3 The battens shall be placed opposite to each other at each end of the member and at points where the member is stayed in its length and as far as practicable, be spaced and proportioned uniformly throughout. The number of battens shall be such that the member is divided into not less than three bays within its actual length from centre-to-centre of end connections.

13.7.1.4 The effective slenderness ratio $(KL/r)_e$ of battened columns, shall be taken as 1.1 times the $(KL/r)_0$, the maximum actual slenderness ratio of the column, to account for shear deformation effects.

13.7.2 *Design of Battens*

13.7.2.1 *Battens*

Battens shall be designed to carry the bending moments and shear forces arising from transverse shear force V_t equal to 2.5 percent of the total axial force on the whole compression member, at any point in the length of the member, divided equally between parallel planes of battens. Battened member carrying calculated bending moment due to eccentricity of axial loading, calculated end moments or lateral loads parallel to the plane of battens, shall be designed to carry actual shear in addition to the above shear. The main members shall also be checked for the same shear force and bending moments as for the battens.

Battens shall be of plates, angles, channels, or I-sections and at their ends shall be riveted. bolted or welded to the main components so as to resist simultaneously a shear $V_b = V_t C/NS$ along the column axis and a moment $M = V_t C/2N$ at each connection,

where

V_t = transverse shear force as defined above;

C = distance between centre-to-centre of battens, longitudinally;

N = number of parallel planes of battens; and

S = minimum transverse distance between the centroid of the rivet/bolt group/welding connecting the batten to the main member.

13.7.2.2 *Tie plates*

Tie plates are members provided at the ends of battened

and laced members, and shall be designed by the same method as battens. In no case shall a tie plate and its fastenings be incapable of carrying the forces for which the lacing or batten has been designed.

13.7.2.3 *Size*

When plates are used for battens. the end battens and those at points where the member is stayed in its length shall have an effective depth, longitudinally, not less than the perpendicular distance between the centroids of the main members. The intermediate battens shall have an effective depth of not less than three quarters of this distance, but in no case shall the effective depth of any batten be less than twice the width of one member, in the plane of the battens. The effective depth of a batten shall be taken as the longitudinal distance between outermost bolts, rivets or welds at the ends. The thickness of batten or the tie plates shall be not less than one fiftieth of the distance between the innermost connecting lines of rivets, bolts or welds, perpendicular to the main member.

13.7.2.4 The requirement of bolt size and thickness of batten specified above does not apply when angles, channels or I-sections are used for battens with their legs or flanges perpendicular to the main member. However, it should be ensured that the ends of the compression members are tied to achieve adequate rigidity.

13.7.3 *Spacing of Battens*

13.7.3.1 In battened compression members where the individual members are not specifically checked for shear stress and bending moments, the spacing of battens, centre-to-centre of its end fastenings, shall be such that the slenderness ratio (KL/r) of any component over that distance shall be not greater than 50 nor greater than 0.7 times the slenderness ratio of the member as a whole about its z-z axis (parallel to the battens).

13.7.4 *Attachment to Main Members*

13.7.4.1 *Welded connections*

Where tie or batten plates overlap the main members, the amount of lap shall be not less than four times the thickness of the plate. The length of weld connecting each edge of the batten plate to the member shall, in aggregate, be not less than half the depth of the batten plate. At least one-third of the weld shall be placed at each end of this edge. The length of weld and depth of batten plate shall be measured along the longitudinal axis of the main member.

In addition, the welding shall be returned along the other two edges of the plates transversely to the axis of the main member for a length not less than the minimum lap specified above.

13.8 Compression Members Composed of Two Components Back-to-Back

13.8.1 Compression members composed of two angles. channels. or tees back-to-back in contact or separated by a small distance, shall be connected together by riveting, bolting or welding so that the ratio of most unfavorable slenderness of each member between the intermediate connections is not greater than 40 or 0.6 times the most unfavourable ratio of slenderness of the strut as a whole, whichever is less [*see* Section 6(k)].

13.8.2 In no case shall the ends of the strut be connected together with less than two rivets or bolts or their equivalent in welding, and there shall be not less than two additional connections in between, spaced equidistant along the length of the strut. Where the members are separated back-to-back, the rivets or bolts through these connections shall pass through solid washers or packing in between. Where the legs of the connected angles or the connected tees are 125 mm wide or more, or where webs of channels are 150 mm wide or over, not less than two rivets or bolts shall be used in each connection, one on line of each gauge mark.

13.8.3 Where these connections are made by welding, solid packing shall be used to effect the jointing unless the members are sufficiently close together to permit direct welding, and the members shall be connected by welding along both pairs of edges of the main components.

13.8.4 The rivets, bolts or welds in these connections shall be sufficient to carry the shear force and moments, if any, specified for battened struts (*see* **13.7.3**), and in no case shall the rivets or bolts be less than 16 mm diameter for members up to and including 10 mm thick; 20 mm diameter for members up to and including 16 mm thick; and 22 mm diameter for members over 16 mm thick.

13.8.4.1 Compression members connected by such riveting, bolting or welding shall not be subjected to transverse loading in a plane perpendicular to the riveted, bolted or welded surfaces.

13.8.5 Where the components are in contact back-to-back, the spacing of the rivets, bolts or intermittent welds shall not exceed the maximum spacing for compression members as given in Section 6(m).

SECTION 6(h) DESIGN OF MEMBERS SUBJECTED TO BENDING

14 DESIGN OF MEMBERS SUBJECTED TO BENDING

14.1 General

Members subjected to predominant bending shall have adequate design strength to resist bending moment, shear force, and concentrated forces imposed upon and their combinations. Further, the members shall satisfy

the deflection limitation presented in Section 6(e), as serviceability criteria. Member subjected to other forces in addition to bending or biaxial bending shall be designed in accordance with Section 6(j).

14.1.1 *Effective Span of Beams*

The effective span of a beam shall be taken as the distance between the centres of the supports, except where the point of application of the reaction is taken as eccentric at the support, when it shall be permissible to take the effective span as the length between the assumed lines of the reactions.

14.2 Design Strength in Bending (Flexure)

The design bending strength of beam, adequately supported against lateral torsional buckling (laterally supported beam) is governed by the yield stress (*see* **14.2.1**). When a beam is not adequately supported against lateral buckling (laterally un-supported beams) the design bending strength may be governed by lateral torsional buckling strength (*see* **14.2.2**).

The factored design moment, M at any section, in a beam due to external actions, shall satisfy

$$M \leq M_d$$

where

M_d = design bending strength of the section, calculated as given in **14.2.1.2**.

14.2.1 *Laterally Supported Beam*

A beam may be assumed to be adequately supported at the supports, provided the compression flange has full lateral restraint and nominal torsional restraint at supports supplied by web cleats, partial depth end plates, fin plates or continuity with the adjacent span. Full lateral restraint to compression flange may be assumed to exist if the frictional or other positive restraint of a floor connection to the compression flange of the member is capable of resisting a lateral force not less than 2.5 percent of the maximum force in the compression flange of the member. This may be considered to be uniformly distributed along the flange, provided gravity loads constitute the dominant loading on the member and the floor construction is capable of resisting this lateral force.

The design bending strength of a section which are not susceptible to web buckling under shear before yielding (where $d/t_w \leq 67e$) shall be determined according to **14.2.1.2**.

14.2.1.1 *Section with webs susceptible to shear buckling before yielding*

When the flanges are plastic, compact or semi-compact but the web is susceptible to shear buckling before yielding (*see* **14.4.2.1**), the design bending strength shall be calculated using one of the following methods:

a) The bending moment and axial force acting on the section may be assumed to be resisted by flanges only and the web is designed only to resist shear (*see* **14.4**).

b) The bending moment and axial force acting on the section may be assumed to be resisted by the whole section. In such a case, the web shall be designed for combined shear and normal stresses using simple elastic theory in case of semi-compact webs and simple plastic theory in the case of compact and plastic webs.

14.2.1.2 When the factored design shear force does not exceed 0.6 V_d, where V_d is the design shear strength of the cross-section (*see* **14.4**), the design bending strength, M_d shall be taken as:

$$M_d = \beta_b Z_p f_y / \gamma_{m0}$$

To avoid irreversible deformation under serviceability loads, M_d shall be less than 1.2 $Z_e f_y / \gamma_{m0}$ in case of simply supported and 1.5 $Z_e f_y / \gamma_{m0}$ in case of cantilever beams;

where

β_b = 1.0 for plastic and compact sections;

= Z_e / Z_p for semi-compact sections;

Z_p, Z_e = plastic and elastic section moduli of the cross-section, respectively;

f_y = yield stress of the material; and

γ_{m0} = partial safety factor (*see* **11.4.1**).

14.2.1.3 When the design shear force (factored), V exceeds $0.6V_d$, where V_d is the design shear strength of the cross-section (*see* **14.4**) the design bending strength, M_d shall be taken as:

$$M_d = M_{dv}$$

where

M_{dv} = design bending strength under high shear as defined in **15.2**.

14.2.1.4 *Holes in the tension zone*

a) The effect of holes in the tension flange, on the design bending strength need not be considered if

$$(A_{nf} / A_{gf}) \geq (f_y/f_u)\,(\gamma_{m1}/\gamma_{m0})/0.9$$

where

A_{nf}/A_{gf} = ratio of net to gross area of the flange in tension;

f_y/f_u = ratio of yield and ultimate stress of the material; and

γ_{m1}/γ_{m0} = ratio of partial safety factors

against ultimate to yield stress (*see* **11.4.1**).

When the A_{nf}/A_{gf} does not satisfy the above requirement, the reduced effective flange area, A_{ef} satisfying the above equation may be taken as the effective flange area in tension, instead of A_{gf}.

b) The effect of holes in the tension region of the web on the design flexural strength need not be considered, if the limit given in **14.2.1.4**(a) above is satisfied for the complete tension zone of the cross-section, comprising the tension flange and tension region of the web.

c) Fastener holes in the compression zone of the cross-section need not be considered in design bending strength calculation, except for oversize and slotted holes or holes without any fastener.

14.2.1.5 *Shear lag effects*

The shear lag effects in flanges may be disregarded provided:

a) For outstand elements (supported along one edge), $b_o \leq L_o/20$; and

b) For internal elements (supported along two edges), $b_i \leq L_o/10$.

where

L_o = length between points of zero moment (inflection) in the span,

b_o = width of the flange with outstand, and

b_i = width of the flange as an internal element

Where these limits are exceeded, the effective width of flange for design strength may be calculated using specialist literature, or conservatively taken as the value satisfying the limit given above.

14.2.2 *Laterally Unsupported Beams*

Resistance to lateral torsional buckling need not be checked separately (member may be treated as laterally supported, *see* **14.2.1**) in the following cases:

a) Bending is about the minor axis of the section,

b) Section is hollow (rectangular/ tubular) or solid bars, and

c) In case of major axis bending, λ_{LT} (as defined herein) is less than 0.4.

The design bending strength of laterally unsupported beam as governed by lateral torsional buckling is given by:

$$M_d = \beta_b Z_p f_{bd}$$

where

β_b = 1.0 for plastic and compact sections;

= Z_e/Z_p for semi-compact sections;

Z_p, Z_e = plastic section modulus and elastic section modulus with respect to extreme compression fibre;

f_{bd} = design bending compressive stress, obtained as given below [*see* Tables 13(a) and 13(b)];

f_{bd} = $c_{LT} f_y/\gamma_{m0}$; and

χ_{LT} = bending stress reduction factor to account for lateral torsional buckling, given by:

$$\chi_{LT} = \frac{1}{\left\{\phi_{LT} + \left[\phi_{LT}^2 - \lambda_{LT}^2\right]^{0.5}\right\}} \leq 1.0$$

$$\phi_{LT} = 0.5\left[1 + \alpha_{LT}(\lambda_{LT} - 0.2) + \lambda_{LT}^2\right]$$

α_{LT}, the imperfection parameter is given by:

α_{LT} = 0.21 for rolled steel section

α_{LT} = 0.49 for welded steel section

The non-dimensional slenderness ratio, l_{LT}, is given by:

$$\lambda_{LT} = \sqrt{\beta_b Z_p f_y / M_{cr}} \leq \sqrt{1.2 Z_e f_y / M_{cr}}$$

$$= \sqrt{f_y / f_{cr,b}}$$

where

M_{cr} = elastic critical moment calculated in accordance with **14.2.2.1**, and

$f_{cr,b}$ = extreme fibre bending compressive stress corresponding to elastic lateral buckling moment (*see* **14.2.2.1** and Table 14).

14.2.2.1 *Elastic lateral torsional buckling moment*

In case of simply supported, prismatic members with symmetric cross-section, the elastic lateral buckling moment, M_{cr}, can be determined from:

$$M_{cr} = \sqrt{\left\{\left(\frac{\pi^2 EI_y}{(L_{LT})^2}\right)\left[GI_t + \frac{\pi^2 EI_w}{(L_{LT})^2}\right]\right\}} = \beta_b Z_p f_{cr,b}$$

$f_{cr,b}$ of non-slender rolled steel sections in the above equation may be approximately calculated from the values given in the Table 14, which has been prepared using the following equation:

$$f_{cr,b} = \frac{1.1\pi^2 E}{(L_{LT}/r_y)^2}\left[1 + \frac{1}{20}\left(\frac{L_{LT}/r_y}{h_f/t_f}\right)^2\right]^{0.5}$$

Table 13(a) Design Bending Compressive Stress Corresponding to Lateral Buckling, f_{bd}, $\alpha_{LT} = 0.21$)

(*Clause* 14.2.2)

$f_{cr,b}$	f_y																		
	200	210	220	230	240	250	260	280	300	320	340	360	380	400	420	450	480	510	540
10 000	181.8	190.9	200	209.1	218.2	227.3	236.4	254.5	272.7	290.9	309.1	327.3	345.5	363.6	381.8	409.1	436.4	463.6	490.9
8 000	181.8	190.9	200	209.1	218.2	227.3	236.4	254.5	272.7	290.9	309.1	327.3	345.5	363.6	381.8	409.1	436.4	463.6	490.9
6 000	181.8	190.9	200	209.1	218.2	227.3	236.4	254.5	272.7	290.9	309.1	327.3	345.5	363.6	381.8	409.1	436.4	463.6	490.9
4 000	181.8	190.9	200	209.1	218.2	227.3	236.4	254.5	272.7	290.9	309.1	327.3	345.5	363.6	381.8	409.1	436.4	463.6	490.9
2 000	181.8	190.9	200	209.1	218.2	227.3	236.4	254.5	272.7	290.9	309.1	327.3	345.5	363.6	381.8	409.1	436.4	463.6	490.9
1 000	169.1	179.5	186	196.5	202.9	209.1	219.8	229.1	245.5	261.8	275.1	291.3	300.5	323.6	332.2	355.9	370.9	384.8	412.4
900	169.1	179.5	186	194.5	200.7	204.5	215.1	231.6	242.7	258.9	272	291.3	300.5	316.4	328.4	339.5	366.5	380.2	392.7
800	167.3	177.5	184	190.3	196.4	206.8	212.7	224	240	258.9	268.9	284.7	293.6	301.8	324.5	335.5	349.1	370.9	387.8
700	163.6	171.8	182	188.2	192	202.3	208	226.5	237.3	250.2	259.6	278.2	286.7	294.5	305.5	327.3	340.4	352.4	363.3
600	161.8	168	176	181.9	194.2	197.7	203.3	218.9	226.4	244.4	253.5	261.8	276.4	287.3	294	306.8	322.9	333.8	343.6
500	161.8	166.1	172	179.8	185.5	188.6	200.9	208.7	218.2	232.7	244.2	248.7	259.1	269.1	274.9	286.4	296.7	301.4	314.2
450	158.2	164.2	168	173.5	183.3	186.4	191.5	206.2	215.5	224	231.8	242.2	248.7	258.2	263.5	274.1	279.3	292.1	294.5
400	150.9	162.3	166	169.4	174.5	184.1	186.7	196	204.5	215.3	222.5	229.1	238.4	243.6	248.2	257.7	261.8	264.3	274.9
350	147.3	152.7	162	165.2	170.2	172.7	179.6	188.4	193.6	200.7	210.2	212.7	221.1	225.5	229.1	233.2	240	241.1	245.5
300	143.6	147	152	154.7	161.5	163.6	167.8	175.6	182.7	186.2	194.7	196.4	196.9	203.6	206.2	212.7	213.8	217.9	220.9
250	134.5	137.5	142	144.3	148.4	152.3	153.6	160.4	163.6	165.8	170	173.5	179.6	178.2	179.5	184.1	183.3	185.5	191.5
200	121.8	124.1	126	129.6	130.9	134.1	134.7	137.5	141.8	142.5	145.3	147.3	148.5	149.1	152.7	151.4	152.7	153	157.1
150	101.8	103.1	104	104.5	106.9	106.8	108.7	109.5	111.8	113.5	114.4	114.5	117.5	116.4	118.4	118.6	117.8	120.5	122.7
100	74.5	76.4	76	77.4	76.4	77.3	78	78.9	79.1	78.5	80.4	81.8	79.5	80	80.2	81.8	82.9	83.5	83.5
90	67.3	68.7	70	69	69.8	70.5	70.9	71.3	70.9	72.7	74.2	72	72.5	72.7	72.5	73.6	74.2	74.2	73.6
80	61.8	63	62	62.7	63.3	63.6	63.8	63.6	65.5	64	64.9	65.5	65.6	65.5	64.9	65.5	65.5	64.9	68.7
70	54.5	55.4	56	56.5	56.7	56.8	56.7	56	57.3	58.2	58.7	58.9	58.7	58.2	57.3	57.3	56.7	60.3	58.9
60	47.3	47.7	48	48.1	48	50	49.6	48.4	49.1	49.5	49.5	49.1	48.4	50.9	49.6	49.1	52.4	51	49.1
50	40	40.1	40	41.8	41.5	40.9	40.2	40.7	40.9	40.7	43.3	42.5	41.5	43.6	42	40.9	43.6	41.7	44.2
40	32.7	32.5	32	33.5	32.7	34.1	33.1	33.1	32.7	34.9	34	32.7	34.5	32.7	34.4	32.7	34.9	32.5	34.4
30	25.5	24.8	26	25.1	26.2	25	26	25.5	24.5	26.2	24.7	26.2	24.2	25.5	26.7	24.5	26.2	27.8	24.5
20	16.4	17.2	18	16.7	17.5	18.2	16.5	17.8	16.4	17.5	18.5	16.4	17.3	18.2	19.1	16.4	17.5	18.5	19.6
10	9.1	9.5	8	8.4	8.7	9.1	9.5	7.6	8.2	8.7	9.3	9.8	10.4	7.3	7.6	8.2	8.7	9.3	9.8

Table 13(b) Design Bending Compressive Stress Corresponding to Lateral Buckling, f_{bd}, $\alpha_{LT} = 0.49$)

(*Clause* 14.2.2)

$f_{cr,b}$	f_y																		
	200	210	220	230	240	250	260	280	300	320	340	360	380	400	420	450	480	510	540
10 000	181.8	190.9	200.0	209.1	218.2	227.3	236.4	254.5	272.7	290.9	309.1	327.3	345.5	363.6	381.8	409.1	436.4	463.6	490.9
8 000	181.8	190.9	200.0	209.1	218.2	227.3	236.4	254.5	272.7	290.9	309.1	327.3	345.5	363.6	381.8	409.1	436.4	463.6	490.9
6 000	181.8	190.9	200.0	209.1	218.2	227.3	236.4	254.5	272.7	290.9	309.1	327.3	345.5	363.6	381.8	409.1	436.4	463.6	490.9
4 000	181.8	190.9	200.0	209.1	218.2	227.3	236.4	254.5	272.7	290.9	309.1	327.3	345.5	363.6	381.8	409.1	436.4	463.6	490.9
2 000	181.8	190.9	200.0	209.1	218.2	227.3	236.4	254.5	272.7	290.9	309.1	327.3	345.5	363.6	381.8	409.1	436.4	463.6	490.9
1 000	160.0	164.2	170.0	179.8	185.5	190.9	196.2	211.3	220.9	235.6	247.3	255.3	266.0	280	290.2	302.7	318.5	329.2	343.6
900	154.5	164.2	170.0	173.5	183.3	188.6	193.8	203.6	218.2	226.9	238.0	252.0	262.5	269.1	282.5	290.5	305.5	319.9	333.8
800	152.7	158.5	168.0	171.5	176.7	181.8	191.5	201.1	210.0	224.0	234.9	242.2	252.2	258.2	271.1	282.3	296.7	306	319.1
700	150.9	154.6	160.0	169.4	172.4	177.3	182.0	196	207.3	215.3	222.5	232.4	238.4	247.3	259.6	270	279.3	292.1	304.4
600	145.5	150.8	154.0	161.0	168.0	172.7	177.3	188.4	193.6	203.6	213.3	222.5	228	236.4	244.4	253.6	261.8	273.5	274.9
500	140.0	145.1	150.0	154.7	159.3	161.4	167.8	175.6	185.5	192	200.9	206.2	214.2	218.2	225.3	229.1	240	245.7	250.4
450	134.5	141.3	144.0	148.5	152.7	156.8	160.7	168	177.3	186.2	191.6	196.4	203.8	210.9	213.8	220.9	231.3	236.5	235.6
400	129.1	135.5	138.0	142.2	148.4	150	153.6	162.9	169.1	174.5	182.4	183.3	193.5	196.4	202.4	208.6	209.5	217.9	220.9
350	123.6	129.8	132.0	135.9	139.6	143.2	148.9	152.7	158.2	162.9	170	173.5	176.2	181.8	183.3	192.3	196.4	199.4	206.2
300	118.2	122.2	126.0	129.6	130.9	134.1	137.1	142.5	147.3	154.2	157.6	157.1	162.4	167.3	168	175.9	178.9	180.8	181.6
250	109.1	112.6	116.0	117.1	120.0	122.7	125.3	129.8	130.9	136.7	139.1	140.7	145.1	149.1	148.9	151.4	152.7	157.6	157.1
200	98.2	101.2	102.0	104.5	104.7	109.1	108.7	112	117.3	119.3	120.5	121.1	124.4	127.3	126	130.9	130.9	129.8	132.5
150	83.6	84.0	86.0	87.8	89.5	88.6	89.8	91.6	95.5	96.0	95.8	98.2	100.2	101.8	103.1	102.3	104.7	106.6	103.1
100	63.6	63.0	64.0	64.8	65.5	65.9	66.2	68.7	68.2	69.8	71.1	68.7	69.1	72.7	72.5	73.6	74.2	74.2	73.6
90	58.2	57.3	60.0	58.5	61.1	61.4	61.5	61.1	62.7	64.0	64.9	65.5	65.6	65.5	64.9	65.5	65.5	64.9	68.7
80	52.7	53.5	54.0	54.4	54.5	54.5	54.4	56	57.3	58.2	58.7	58.9	58.7	58.2	61.1	61.4	61.1	60.3	58.9
70	47.3	47.7	48.0	48.1	48.0	50.0	49.6	50.9	49.1	49.5	52.5	52.4	51.8	50.9	53.5	53.2	52.4	55.6	54.0
60	41.8	42.0	42.0	41.8	43.6	43.2	42.5	43.3	43.6	43.6	43.3	45.8	44.9	47.3	45.8	45.0	48.0	46.4	49.1
50	36.4	36.3	36.0	35.5	37.1	36.4	37.8	38.2	38.2	37.8	37.1	39.3	38.0	40.0	38.2	40.9	39.3	37.1	39.3
40	29.1	30.5	30.0	29.3	30.5	29.5	30.7	30.5	30.0	32.0	30.9	32.7	31.1	32.7	30.5	32.7	30.5	32.5	34.4
30	23.6	22.9	22.0	23.0	24.0	22.7	23.6	22.9	24.5	23.3	24.7	22.9	24.2	25.5	22.9	24.5	26.2	23.2	24.5
20	16.4	15.3	16.0	16.7	15.3	15.9	16.5	15.3	16.4	17.5	15.5	16.4	17.3	18.2	15.3	16.4	17.5	18.5	14.7
10	9.1	7.6	8.0	8.4	8.7	9.1	9.5	7.6	8.2	8.7	9.3	9.8	6.9	7.3	7.6	8.2	8.7		

Table 14 Critical Stress, $f_{cr,b}$

(*Clause* 14.2.2.1)

L_{LT}/r_y	h_f/t_f														
	8	10	12	14	16	18	20	25	30	35	40	50	60	80	100
10	22551.2	22255.1	22092.6	21994.1	21929.8	21885.7	21854.0	21805.4	21779.0	21763.1	21752.7	21740.5	21733.8	21727.2	21724.2
20	6220.5	5947.9	5794.5	5700.0	5637.8	5594.7	5563.8	5515.8	5489.7	5473.8	5463.5	5451.4	5444.8	5438.2	5435.1
30	3149.3	2905.9	2764.6	2676.0	2616.7	2575.3	2545.3	2498.5	2472.8	2457.1	2447.0	2434.9	2428.3	2421.7	2418.6
40	2036.1	1821.2	1693.0	1610.8	1555.1	1515.8	1487.0	1441.7	1416.5	1401.1	1391.0	1379.0	1372.5	1365.9	1362.8
50	1492.9	1303.2	1187.3	1111.8	1059.9	1022.7	995.3	951.7	927.1	912.0	902.0	890.2	883.7	877.1	874.2
60	1178.0	1009.5	905.0	835.6	787.4	752.4	726.4	684.6	660.9	646.1	636.4	624.7	618.2	611.7	608.7
70	973.9	823.2	728.5	664.8	620.1	587.4	562.9	522.9	500.0	485.5	476.0	464.4	458.0	451.7	448.7
80	831.3	695.4	609.2	550.7	509.1	478.4	455.3	417.2	395.1	381.2	371.8	360.5	354.1	347.7	344.7
90	725.9	602.6	523.6	469.5	430.9	402.2	380.4	344.2	322.9	309.3	300.2	289.1	282.8	276.5	273.5
100	644.7	532.0	459.3	409.3	373.2	346.4	325.8	291.4	270.9	257.7	248.8	237.9	231.8	225.5	222.5
110	580.4	476.6	409.3	362.9	329.2	303.9	284.5	251.8	232.1	219.3	210.8	200.1	194.0	187.8	184.8
120	527.9	431.9	369.5	326.0	294.5	270.7	252.3	221.2	202.4	190.1	181.6	171.2	165.2	159.1	156.2
130	484.3	395.0	336.8	296.1	266.5	244.1	226.7	197.1	179.0	167.1	158.8	148.6	142.8	136.7	133.9
140	447.6	364.2	309.5	271.5	243.4	222.3	205.8	177.5	160.2	148.7	140.7	130.8	125.0	119.0	116.2
150	416.0	337.8	286.6	250.6	224.2	204.2	188.4	161.5	144.8	133.7	126.0	116.3	110.6	104.7	101.9
160	388.7	315.2	266.8	232.8	207.8	188.8	173.9	148.2	132.0	121.3	113.9	104.3	98.8	93.0	90.1
170	364.9	295.4	249.6	217.5	193.7	175.6	161.4	136.7	121.3	111.0	103.6	94.4	89.0	83.2	80.4
180	343.9	278.0	234.6	204.1	181.5	164.2	150.6	127.1	112.2	102.2	95.2	86.0	80.7	75.0	72.3
190	325.2	262.6	221.3	192.3	170.7	154.2	141.2	118.6	104.3	94.6	87.8	79.0	73.7	68.1	65.3
200	308.3	248.8	209.6	181.7	161.2	145.4	133.0	111.3	97.5	88.1	81.4	72.8	67.8	62.2	59.5
210	293.3	236.5	198.9	172.4	152.7	137.6	125.7	104.8	91.5	82.4	75.9	67.5	62.6	57.1	54.5
220	279.5	225.3	189.3	163.9	145.1	130.6	119.1	99.0	86.2	77.4	71.2	62.9	58.1	52.7	50.1
230	267.1	215.2	180.7	156.3	138.2	124.3	113.3	93.9	81.5	72.9	66.9	58.9	54.1	48.8	46.2
240	255.8	205.8	172.8	149.4	132.0	118.6	108.0	89.3	77.2	69.0	63.1	55.3	50.6	45.4	42.8
250	245.3	197.3	165.6	143.0	126.3	113.4	103.2	85.1	73.5	65.5	59.7	52.1	47.5	42.4	39.8
260	235.7	189.5	159.0	137.3	121.1	108.7	98.8	81.3	70.1	62.3	56.7	49.3	44.8	39.7	37.2
270	226.8	182.3	152.8	131.9	116.3	104.3	94.7	77.9	67.0	59.4	53.9	46.8	42.2	37.3	34.8
280	218.6	175.7	147.2	126.9	111.9	100.2	91.1	74.7	64.1	56.8	51.5	44.4	40.0	35.2	32.7
290	210.9	169.4	141.9	122.3	107.8	96.6	87.7	71.8	61.5	54.3	49.2	42.2	38.1	33.2	30.8
300	203.8	163.7	137.1	118.1	104.1	93.2	84.5	69.1	59.1	52.1	47.1	40.4	36.2	31.5	29.0

The following simplified equation may be used in the case of prismatic members made of standard rolled I-sections and welded doubly symmetric I-sections, for calculating the elastic lateral buckling moment, M_{cr} (*see* Table 14).

$$M_{cr} = \frac{\pi^2 E I_y h_f}{2L_{LT}^2}\left[1+\frac{1}{20}\left(\frac{L_{LT}/r_y}{h_f/t_f}\right)^2\right]^{0.5}$$

where

I_t = torsional constant $\sum b_i t_i^3/3$ for open section;

I_w = warping constant;

I_y, r_y = moment of inertia and radius of gyration, respectively about the weaker axis;

L_{LT} = effective length for lateral torsional buckling (*see* **14.3**);

h_f = centre-to-centre distance between flanges; and

t_f = thickness of the flange.

M_{cr} for different beam sections, considering loading, support condition, and asymmetric section, shall be more accurately calculated using the method given in Annex D. The above equations for calculating M_{cr} may be conservatively used for channel sections.

14.3 Effective Length for Lateral Torsional Buckling

14.3.1 For simply supported beams and girders of span length, L, where no lateral restraint to the compression flanges is provided, but where each end of the beam is restrained against torsion, the effective length L_{LT} of the lateral buckling to be used in **14.2.2.1** shall be taken as in Table 15.

In simply supported beams with intermediate lateral restraints against lateral torsional buckling, the effective length for lateral torsional buckling, L_{LT} to be used in **14.2.2.1**, shall be taken as the length of the relevant segment in between the lateral restraints. In the case of intermediate partial lateral restraints, the effective length, L_{LT} shall be taken as equal to 1.2 times the length of the relevant segment in between the partial lateral restraints.

Restraint against torsional rotation at supports in these beams may be provided by,

a) web or flange cleats, or

b) bearing stiffeners acting in conjunction with the bearing of the beam, or

c) lateral end frames or external supports providing lateral restraint to the compression flanges at the ends, or

d) their being built into walls.

Table 15 Effective Length for Simply Supported Beams, L_{LT}

(*Clause* 14.3.1)

Sl No.	Conditions of Restraint at Supports		Loading Condition	
	Torsional restraint	Warping Restraint	Normal	Destabilizing
(1)	(2)	(3)	(4)	(5)
i)	Fully restrained	Both flanges fully restrained	0.70 L	0.85 L
ii)	Fully restrained	Only compression flange fully restrained	0.75 L	0.90 L
iii)	Fully restrained	Both flanges partially restrained	0.80 L	0.95 L
iv)	Fully restrained	Only compression flange partially restrained	0.85 L	1.00 L
v)	Fully restrained	No restraint in both flanges	1.00 L	1.20 L
vi)	Partially restrained by bottom flange support connection	No restraint in both flanges	1.0 L+ 2D	1.2 L+2D
vii)	Partially restrained by bottom flange bearing support	No restraint in both flanges	1.2 L+ 2D	1.4 L+2D

NOTES

1 Torsional restraint prevents rotation about the longitudinal axis.

2 Warping restraint prevents rotation of the flange in its plane.

3 D is the overall depth of the beam.

4 In case of continuous beams, L shall be taken as the distance between points of inflection, and the restraint conditions at the points of inflection should be considered.

14.3.2 For beams, which are provided with members giving effective lateral restraint to the compression flange at intervals along the span, in addition to the end torsional restraint required in **14.3.1**, the effective length for lateral torsional buckling shall be taken as the distance, centre-to-centre of the restraint members in the relevant segment under normal loading condition and 1.2 times this distance, where the load is not acting on the beam at or above the shear centre and towards the shear centre, so as to have destabilizing effect during lateral torsional buckling deformation.

14.3.3 For cantilever beams of projecting length L, the effective length L_{LT} to be used in **14.2.2.1** shall be taken as in Table 16 for different support conditions.

14.3.4 Where a member is provided intermediate lateral supports to improve the lateral buckling strength, these restraints should have sufficient strength and stiffness to prevent lateral movement of the compression flange at that point, relative to the end supports. The intermediate lateral restraints should be either connected to an appropriate bracing system capable of transferring the restraint force to the effective lateral support at the ends of the member, or should be connected to an independent robust part of the structure capable of transferring the restraint force. Two or more parallel member requiring such lateral restraint shall not be simply connected together assuming mutual dependence for the lateral restraint.

The intermediate lateral restraints should be connected to the member as close to the compression flange as practicable. Such restraints should be closer to the shear centre of the compression flange than to the shear centre of the section. However, if torsional restraint preventing relative rotation between the two flanges is provided, the intermediate lateral restraint may be connected at any appropriate level.

For beams which are provided with members giving effective lateral restraint at intervals along the span, the effective lateral restraint shall be capable of resisting a force of 2.5 percent of the maximum force in the compression flange taken as divided equally between the points at which the restraint members are provided. Further, each restraint point should be capable of resisting 1 percent of the maximum force in the compression flange.

14.3.4.1 In a series of such beams, with solid webs, which are connected together by the same system of restraint members, the sum of the restraining forces required shall be taken as 2.5 percent of the maximum flange force in one beam only.

14.3.4.2 In the case of a series of latticed beams, girders or roof trusses which are connected together by the same system of restraint members, the sum of the restraining forces required shall be taken as 2.5 percent of the maximum force in the compression flange plus 1.25 percent of this force for every member of the series other than the first, up to a maximum total of 7.5 percent.

14.3.5 Purlins adequately restrained by sheeting need not be normally checked for the restraining forces required by rafters, roof trusses or portal frames that carry predominately roof loads provided there is bracing of adequate stiffness in the plane of rafters or roof sheeting which is capable of acting as a stressed skin diaphragm.

14.3.6 In case of beams with double curvature bending, adequate direct lateral support to the compression flange in the hogging moment region may be provided as given above for simply supported beam. The effect of support to the tension (top) flange in the hogging moment region on lateral restraint to the compression flange may be considered as per specialist literature.

14.4 Shear

The factored design shear force, V, in a beam due to external actions shall satisfy

$$V \leq V_d$$

where

V_d = design strength

= V_n/γ_{m0}

where

γ_{m0} = partial safety factor against shear failure (*see* **11.4.1**).

The nominal shear strength of a cross-section, V_n, may be governed by plastic shear resistance (*see* **14.4.1**) or strength of the web as governed by shear buckling (*see* **14.4.2**).

14.4.1 The nominal plastic shear resistance under pure shear is given by:

$$V_n = V_p$$

where

$$V_p = \frac{A_v f_{yw}}{\sqrt{3}}$$

A_v = shear area; and

f_{yw} = yield strength of the web.

14.4.1.1 The shear area may be calculated as given below:

a) I-and channel sections:

Major Axis Bending:

Hot-rolled : $h\, t_w$

Welded : $d\, t_w$

Minor Axis Bending:

Hot-rolled or welded : $2b\, t_f$

b) Rectangular hollow sections of uniform thickness:

Loaded parallel to depth (h) : $A\, h/(b+h)$

Loaded parallel to width (b) : $A\, b/(b+h)$

c) Circular hollow tubes of uniform thickness : $2A/\pi$

d) Plates and solid bars : A

where

A = cross-section area,

b = overall breadth of tubular section, breadth of I-section flanges,

d = clear depth of the web between flanges,

h = overall depth of the section,

t_f = thickness of the flange, and

t_w = thickness of the web.

NOTE — Fastener holes need not be accounted for in plastic design shear strength calculation provided that:

$$A_{vn} \geq (f_y / f_u)(\gamma_{m1}/\gamma_{m0})\, A_v/0.9$$

If A_{vn} does not satisfy the above condition, the effective shear area may be taken as that satisfying the above limit. Block shear failure criteria may be verified at the end connections. Section 6(j) may be referred to for design strength under combined high shear and bending.

14.4.2 *Resistance to Shear Buckling*

14.4.2.1 Resistance to shear buckling shall be verified as specified, when

$d/t_w > 67\varepsilon_w$ for a web without stiffeners, and

$> 67\varepsilon_w \sqrt{\dfrac{K_v}{5.35}}$ for a web with stiffeners

where

K_v = shear buckling coefficient (*see* **14.4.2.2**), and

$\varepsilon_w = \sqrt{250 / f_{yw}}$

14.4.2.2 *Shear buckling design methods*

The nominal shear strength, V_n, of webs with or without intermediate stiffeners as governed by buckling may be evaluated using one of the following methods:

a) *Simple post-critical method* — The simple post critical method, based on the shear buckling strength can be used for webs of I-section girders, with or without intermediate transverse stiffener, provided that the web has transverse stiffeners at the supports. The nominal shear strength is given by:

$$V_n = V_{cr}$$

where

V_{cr} = shear force corresponding to web buckling

= $A_v \tau_b$

where

τ_b = shear stress corresponding to web buckling, determined as follows:

1) when $\lambda_w \leq 0.8$, $\tau_b = f_{yw} / \sqrt{3}$

2) when $0.8 < \lambda_w < 1.2$,

$$\tau_b = \left[1 - 0.8(\lambda_w - 0.8)\right]\left(f_{yw}/\sqrt{3}\right)$$

3) when $\lambda_w \geq 1.2$, $\tau_b = f_{yw}/\left(\sqrt{3}\, \lambda_w^2\right)$

where

λ_w = Non-dimensional web slenderness ratio for shear buckling stress, given by:

$$\lambda_w = \sqrt{f_{yw} / (\sqrt{3}\, \tau_{cr,e})}$$

$t_{cr,e}$ = elastic critical shear stress of the web

$$= \frac{K_v \pi^2 E}{12\left(1-\mu^2\right)\left[d/t_w\right]^2}$$

where

μ = Poisson's ratio, and

K_v = 5.35 when transverse stiffeners are provided only at supports

= $4.0 + 5.35 /(c/d)^2$ for $c/d < 1.0$

= $5.35 + 4.0 /(c/d)^2$ for $c/d \geq 1.0$

where c, d are the spacing of transverse stiffeners and depth of the web, respectively.

b) *Tension field method* — The tension field method, based on the post-shear buckling strength, may be used for webs with intermediate transverse stiffeners, in addition to the transverse stiffeners at supports, provided the panels adjacent to the panel under tension field action, or the end posts provide anchorage for the tension fields and if $c/d \geq 1.0$, where c, d are the spacing of transverse stiffeners and depth of the web, respectively.

In the tension field method, the nominal shear resistance, V_n, is given by:

$$V_n = V_{tf}$$

where

$$V_{tf} = \left[A_v \tau_b + 0.9 w_{tf} t_w f_v \sin\phi\right] \leq V_p$$

where

τ_b = shear stress corresponding to buckling of web **14.4.2.2**(a);

f_v = yield strength of the tension field obtained from $\left[f_{yw}^2 - 3\tau_b^2 + \psi^2\right]^{0.5} - \psi$;

ψ = $1.5\ \tau_b \sin 2\phi$;

ϕ = inclination of the tension field nearly

$$= \tan^{-1}\frac{\left(\frac{d}{c}\right)}{1.5};$$

w_{tf} = width of the tension field, given by:

= $d \cos\phi - (c - s_c - s_t) \sin\phi$;

f_{yw} = yield stress of the web;

d = depth of the web;

c = spacing of transverse stiffeners in the web; and

s_c, s_t = anchorage lengths of tension field along the compression and tension flange, respectively, obtained from:

$$s = \frac{2}{\sin\phi}\left[\frac{M_{fr}}{f_{yw} t_w}\right]^{0.5} \leq c$$

where

M_{fr} = reduced plastic moment capacity of the respective flange plate (disregarding any edge stiffener) after accounting for the axial force, N_f in the flange, due to overall bending and any external axial force in the cross-section, and is calculated as :

$$M_{fr} = 0.25 b_f t_f^2 f_{yf}\left[1 - \left\{N_f / \left(b_f t_f f_{yf} / \gamma_{m0}\right)\right\}^2\right]$$

where

b_f, t_f = width and thickness of the relevant flange, respectively; and

f_{yf} = yield stress of the flange.

14.5 Stiffened Web Panels

14.5.1 *End Panels Design* (*see Fig.12*)

The girders in which the interior panel (panel A) is designed using tension field action, the end panels shall be designed using only simple post critical method, according to **14.4.2.2**(a).

Additionally, the end panel along with the stiffeners should be checked as a beam spanning between the flanges to resist a shear force, R_{tf}, and a moment, M_{tf}, due to tension field forces as given in **14.5.3**. Further, end stiffener should be capable of resisting the reaction plus a compressive force due to the moment, equal to M_{tf} [*see* Fig. (12)].

14.5.2 *End Panels Designed Using Tension Field Action* (*see Fig. 13 and Fig. 14*)

The end panel (Panel A) shall be designed according to **14.4.2.2**(b).

Additionally it should be provided with an end post consisting of a single or double stiffener (*see* Fig. 13 and Fig. 14), satisfying the following.

a) *Single stiffener* (*see Fig. 13*) — The top of the end post should be rigidly connected to the flange using full strength welds.

The end post should be capable of resisting the reaction plus a moment from the anchor forces equal to 2/3 M_{tf} due to tension field forces, where M_{tf} is obtained from **14.5.3**. The width and thickness of the end post are not to exceed the width and thickness of the flange.

b) *Double stiffener* (*see Fig. 14*) — The end post should be checked as a beam spanning between the flanges of the girder and capable

Table 16 Effective Length, L_{LT} for Cantilever of Length, L

(*Clause* 14.3.3)

Restraint Condition		Loading Conditions	
At Support	At top	Normal	Destabilizing
(2)	(3)	(4)	(5)
a) Continuous, with lateral restraint to top flange 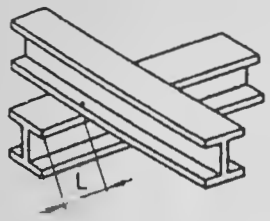	i) Free ii) Lateral restraint to top flange iii) Torsional restraint iv) Lateral and torsional restraint	3.0L 2.7L 2.4L 2.1L	7.5L 7.5L 4.5L 3.6L
b) Continuous, with partial torsional restraint 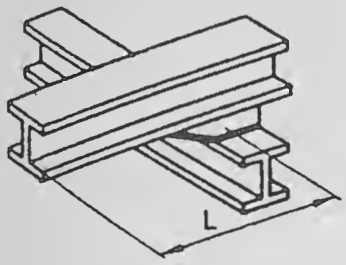	i) Free ii) Lateral restraint to top flange iii) Torsional restraint iv) Lateral and torsional restraint	2.0L 1.8L 1.6L 1.4L	5.0L 5.0L 3.0L 2.4L
c) Continuous, with lateral and torsional restraint 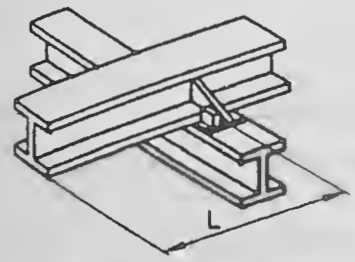	i) Free ii) Lateral restraint to top flange iii) Torsional restraint iv) Lateral and torsional restraint	1.0L 0.9L 0.8L 0.7L	2.5L 2.5L 1.5L 1.2L
d) Restrained laterally, torsionally and against rotation on plan 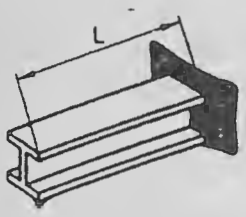	i) Free ii) Lateral restraint to top flange iii) Torsional restraint iv) Lateral and torsional restraint	0.8L 0.7L 0.6L 0.5L	1.4L 1.4L 0.6L 0.5L

Top restraint conditions

i) Free	ii) Lateral restraint to top flange	iii) Torsional restraint	iv) Lateral and torsional restraint
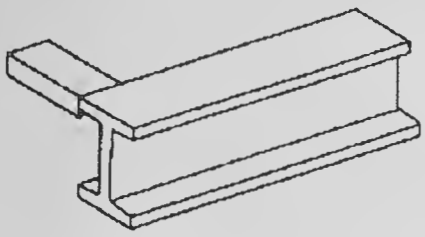	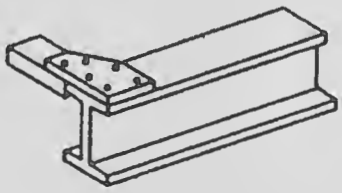	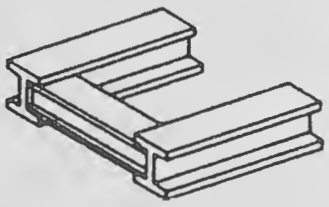	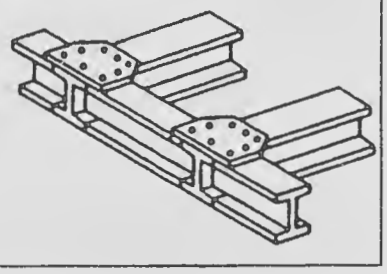

of resisting a shear force R_{tf} and a moment, M_{tf} due to the tension field forces as given in **14.5.3**.

14.5.3 *Anchor Forces*

The resultant longitudinal shear, R_{tf}, and a moment M_{tf} from the anchor of tension field forces are evaluated as given below:

$$R_{tf} = \frac{H_q}{2} \text{ and } M_{tf} = \frac{H_q d}{10}$$

where

$$H_q = 1.25V_p \left(1 - \frac{V_{cr}}{V_p}\right)^{1/2}$$

$$V_p = \frac{dtf_y}{\sqrt{3}}$$

d = web depth,

If the actual factored shear force, V in the panel designed using tension field approach is less than the shear strength, V_{tf} as given in **14.4.2.2**(b), then the values of H_q may be reduced by the ratio $\frac{V - V_{cr}}{V_{tf} - V_{cr}}$

where

V_{tf} = basic shear strength for the panel utilizing tension field action as given in **14.4.2.2**(b), and

V_{cr} = critical shear strength for the panel designed utilizing tension field action as given in **14.4.2.2**(a).

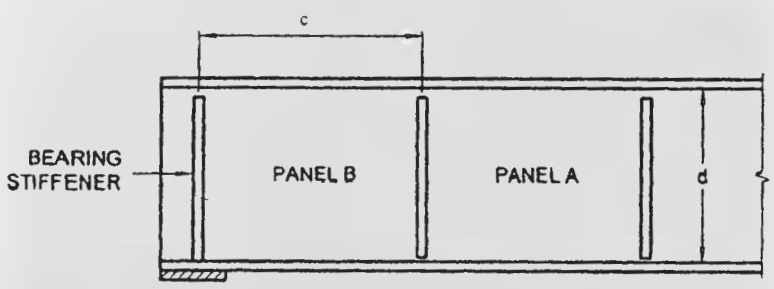

NOTES

1 Panel A is designed utilizing tension field action as given in **14.4.2.2**(b).

2 Panel B is designed using simple post critical method as given in **14.4.2.2**(a).

3 Bearing stiffener is designed for the compressive force due to bearing plus compressive force due to the moment M_{tf} as given in **14.5.3**.

FIG. 12 END PANEL DESIGNED NOT USING TENSION FIELD ACTION

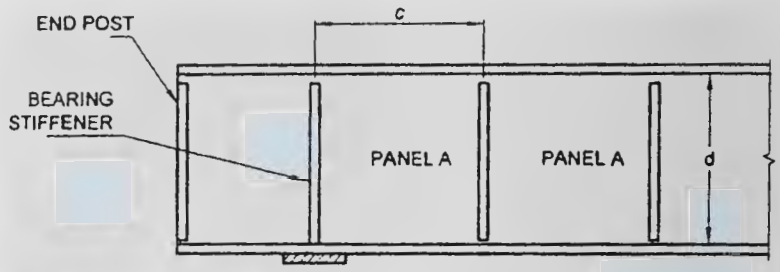

NOTES

1 Panel A is designed utilizing tension field action as given in **14.4.2.2**(b).

2 Bearing stiffener and end post is designed for combination of compressive loads due to bearing and a moment equal to 2/3 M_{tf} as given in **14.5.3**.

FIG. 13 END PANEL DESIGNED USING TENSION FIELD ACTION (SINGLE STIFFENER)

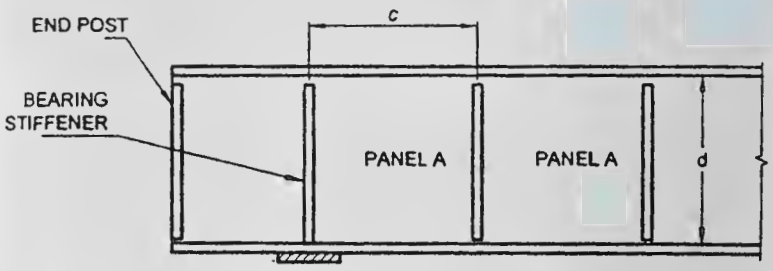

NOTES

1 Panel A is designed utilizing tension field action as given in **14.4.2.2**(b).

2 Bearing stiffener is designed for compressive force due to bearing as given in **14.4.2.2**(a).

3 End post is designed for horizontal shear R_{tf} and moment M_{tf} as given in **14.5.3**.

FIG. 14 END PANEL DESIGNED USING TENSION FIELD ACTION (DOUBLE STIFFENER)

14.5.4 *Panels with Openings*

Panels with opening of dimension greater than 10 percent of the minimum panel dimension should be designed without using tension field action as given in **14.4.2.2**(b). The adjacent panels should be designed as an end panel as given in **14.5.1** or **14.5.2**, as appropriate.

14.6 Design of Beams and Plate Girders with Solid Webs

14.6.1 *Minimum Web Thickness*

The thickness of the web in a section shall satisfy the following requirements:

14.6.1.1 *Serviceability requirement*

a) when transverse stiffeners are not provided,

1) $\frac{d}{t_w} \leq 200\,\varepsilon_w$ (web connected to flanges along both longitudinal edges)

2) $\frac{d}{t_w} \leq 90\varepsilon_w$ (web connected to flanges along one longitudinal edge only),

b) when only transverse stiffeners are provided (in webs connected to flanges along both longitudinal edges),

1) when $3d \geq c \geq d$

$$\frac{d}{t_w} \leq 200\varepsilon_w$$

2) when $0.74\,d \geq c < d$

$$\frac{c}{t_w} \leq 200\varepsilon_w$$

3) when $c < 0.74d$

$$\frac{d}{t_w} \leq 270\varepsilon_w$$

4) when $c > 3d$, the web shall be considered as unstiffened,

c) when transverse stiffeners and longitudinal stiffeners at one level only are provided (0.2 d from compression flange) according to **14.7.13**(a),

1) when $2.4d \geq c \geq d$

$$\frac{d}{t_w} \leq 250\varepsilon_w$$

2) when $0.74\,d \leq c \leq d$

$$\frac{c}{t_w} \leq 250\varepsilon_w$$

3) when $c < 0.74\,d$

$$\frac{d}{t_w} \leq 340\varepsilon_w$$

d) when a second longitudinal stiffener (located at neutral axis is provided)

$$\frac{d}{t_w} \leq 400\varepsilon_w$$

where

d = depth of the web,

t_w = thickness of the web,

c = spacing of transversc stiffener (*see* Fig. 12 and Fig. 13),

ε_w = yield stress ratio of web = $\sqrt{250/f_{yw}}$, and

f_{yw} = yield stress of the web.

14.6.1.2 *Compression flange buckling requirement*

In order to avoid buckling of the compression flange into the web, the web thickness shall satisfy the following:

a) Whcn transverse stiffeners are not provided,

$$\frac{d}{t_w} \leq 345\,\varepsilon_f^2$$

b) When transverse stiffeners are provided, and

i) when $c \geq 1.5\,d$

$$\frac{d}{t_w} \leq 345\,\varepsilon_f^2$$

ii) when $c < 1.5d$

$$\frac{d}{t_w} \leq 345\varepsilon_f$$

where

d = depth of the web,

t_w = thickness of the web,

c = spacing of transverse stiffener (*see* Fig. 12 and Fig. 13),

ε_f = yield stress ratio of flange = $\sqrt{250/f_{yf}}$, and

f_{yf} = yield stress of compression flange.

14.6.2 *Sectional Properties*

14.6.2.1 The effective sectional area of compression flanges shall be thc gross area with deductions for excessive width of plates as specified for compression members [*see* Section 6(g)] and for open holes occurring in a plane perpcndicular to the direction of stress at the section being considered (*see* **14.2.1.4**).

The effective sectional area of tension flanges shall be the gross sectional area with deductions for holes as specified in **14.2.1.4**.

The effective sectional area for parts in shear shall be taken as specified in **14.4.1.1**.

14.6.3 *Flanges*

14.6.3.1 In riveted or bolted construction, flange angles shall form as large a part of the area of the flange as practicable (preferably not less than one-third) and the number of flange platcs shall be kept to a minimum.

In exposed situations, where flange angles are used, at least one plate of the top flange shall extend over the full length of the girder, unless the top edge of the web is machined flush with the flange angles. Where two or more flange plates are used, tacking rivets shall be provided, if necessary to comply with the requirements of Section 6(k).

Each flange plate shall extend beyond its theoretical cut-off point, and the extension shall contain sufficient rivets, bolts or welds to develop in the plate, the load calculated for the bending moment on the girder section

(taken to include the curtailed plate) at the theoretical cut-off point.

The outstand of flange plates, that is the projection beyond the outer line of connections to flange angles, channel or joist flanges or in the case of welded constructions their projection beyond the face of the web or tongue plate, shall not exceed the values given in **9.7.2** (*see* Table 2).

In the case of box girders, the thickness of any plate, or the aggregate thickness of two or more plates, when these plates are tacked together to form the flange, shall satisfy the requirements given in **9.7.2** (*see* Table 2).

14.6.3.2 *Flange splices*

Flange splices should preferably, not be located at points of maximum stress. Where splice plates are used, their area shall be not less than 5 percent in excess of the area of the flange element spliced; their centre of gravity shall coincide, as nearly as possible, with that of the element spliced. There shall be enough bolts, rivets or welds on each side of the splice to develop the load in the element spliced plus 5 percent but in no case should the strength developed be less than 50 percent of the effective strength of the material spliced. In welded construction, flange plates shall be joined by complete penetration butt welds, wherever possible. These butt welds shall develop the full strength of the plates.

14.6.3.3 *Connection of flanges to web*

The flanges of plate girders shall be connected to the web by sufficient rivets, bolts or welds to transmit the maximum horizontal shear force resulting from the bending moment gradient in the girder, combined with any vertical loads which are directly applied to the flange. If the web is designed using tension field method as given in **14.4.2.2** b), the weld should be able to transfer the tension field stress, f_{yw} acting on the web.

14.6.3.4 *Bolted/Riveted construction*

For girders in exposed situations and which do not have flange plates for their entire length, the top edge of the web plate shall be flush with or above the angles, and the bottom edge of the web plate shall be flush with or set back from the angles.

14.6.3.5 *Welded construction*

The gap between the web plates and flange plates shall be kept to a minimum and for fillet welds shall not exceed 1 mm at any point before welding.

14.6.4 *Webs*

14.6.4.1 *Effective sectional area of web of plate girder*

The effective cross-sectional area shall be taken as the full depth of the web plate multiplied by the thickness.

NOTE — Where webs are varied in thickness in the depth of the section by the use of tongue plates or the like, or where the proportion of the web included in the flange area is 25 percent or more of the overall depth, the above approximation is not permissible and the maximum shear stress shall be computed on theory.

14.6.4.2 *Splices in webs*

Splices and cutouts for service ducts in the webs should preferably not be located at points of maximum shear force and heavy concentrated loads.

Splices in the webs of the plate girders and rolled sections shall be designed to resist the shears and moments at the spliced section (*see* Annex E).

In riveted or bolted construction, splice plates shall be provided on each side of the web. In welded construction, web splices shall preferably be made with complete penetration butt welds.

14.6.4.3 Where additional plates are required to augment the strength of the web, they shall be placed on each side of the web and shall be equal in thickness. The proportion of shear force assumed to be resisted by these plates shall be limited by the amount of horizontal shear which they can transmit to the flanges through their fastenings, and such reinforcing plates and their fastenings shall be carried up to the points at which the flange without the additional plates is adequate.

14.7 Stiffener Design

14.7.1 *General*

14.7.1.1 When the web of a member acting alone (that is, without stiffeners) proves inadequate, stiffeners for meeting the following requirements should be provided:

a) *Intermediate transverse web stiffener* — To improve the buckling strength of a slender web due to shear (*see* **14.7.2**).

b) *Load carrying stiffener* — To prevent local buckling of the web due to concentrated loading (*see* **14.7.3** and **14.7.5**).

c) *Bearing stiffener* — To prevent local crushing of the web due to concentrated loading (*see* **14.7.4** and **14.7.6**).

d) *Torsion stiffener* — To provide torsional restraint to beams and girders at supports (*see* **14.7.9**).

e) *Diagonal stiffener* — To provide local reinforcement to a web under shear and bearing (*see* **14.7.7**).

f) *Tension stiffener* — To transmit tensile forces applied to a web through a flange (*see* **14.7.8**).

The same stiffeners may perform more than one function and their design should comply with the requirements of all the functions for which designed.

14.7.1.2 *Outstand of web stiffeners*

Unless the outer edge is continuously stiffened, the outstand from the face of the web should not exceed $20t_q\varepsilon$.

When the outstand of web stiffener is between $14t_q\varepsilon$ and $20t_q\varepsilon$, then the stiffener design should be on the basis of a core section with an outstand of only $14t_q\varepsilon$, where t_q is the thickness of the stiffener.

14.7.1.3 *Stiff bearing length*

The stiff bearing length of any element, b_1, is that length which cannot deform appreciably in bending. To determine b_1, the dispersion of load through a steel bearing element should be taken as 45° through solid material, such as bearing plates, flange plates, etc (*see* Fig.15).

14.7.1.4 *Eccentricity*

Where a load or reaction is applied eccentric to the centerline of the web or where the centroid of the stiffener does not lie on the centerline of the web, the resulting eccentricity of loading should be accounted for in the design of the stiffener.

14.7.1.5 *Buckling resistance of stiffeners*

The buckling resistance F_{qd} should be based on the design compressive stress f_{cd} (*see* **13.1.2.1**) of a strut (curve c), the radius of gyration being taken about the axis parallel to the web. The effective section is the full area or core area of the stiffener (*see* **14.7.1.2**) together with an effective length of web on each side of the centerline of the stiffeners, limited to 20 times the web thickness. The design strength used should be the minimum value obtained for buckling about the web or the stiffener.

The effective length for intermediate transverse stiffeners used in calculating the buckling resistance, F_{qd}, should be taken as 0.7 times the length, L of the stiffener.

The effective length for load carrying web stiffeners used in calculating the buckling resistance, F_{xd}, assumes that the flange through which the load or reaction is applied is effectively restrained against lateral movement relative to the other flange, the effective length should be taken as:

a) $KL = 0.7L$, when flange is restrained against rotation in the plane of the stiffener (by other structural elements), and

b) $KL = L$, when flange is not so restrained

where

L = length of the stiffener.

If the load or reaction is applied to the flange by a compression member, then unless effective lateral restraint is provided at that point, the stiffener should be designed as part of the compression member applying the load, and the connection between the column and beam flange shall be checked for the effects of the strut action.

14.7.2 *Design of Intermediate Transverse Web Stiffeners*

14.7.2.1 *General*

Intermediate transverse stiffeners may be provided on one or both sides of the web.

14.7.2.2 *Spacing*

Spacing of intermediate stiffeners, where provided, shall comply with **14.6.1** depending on the thickness of the web.

14.7.2.3 *Outstand of stiffeners*

The outstand of the stiffeners should comply with **14.7.1.2**.

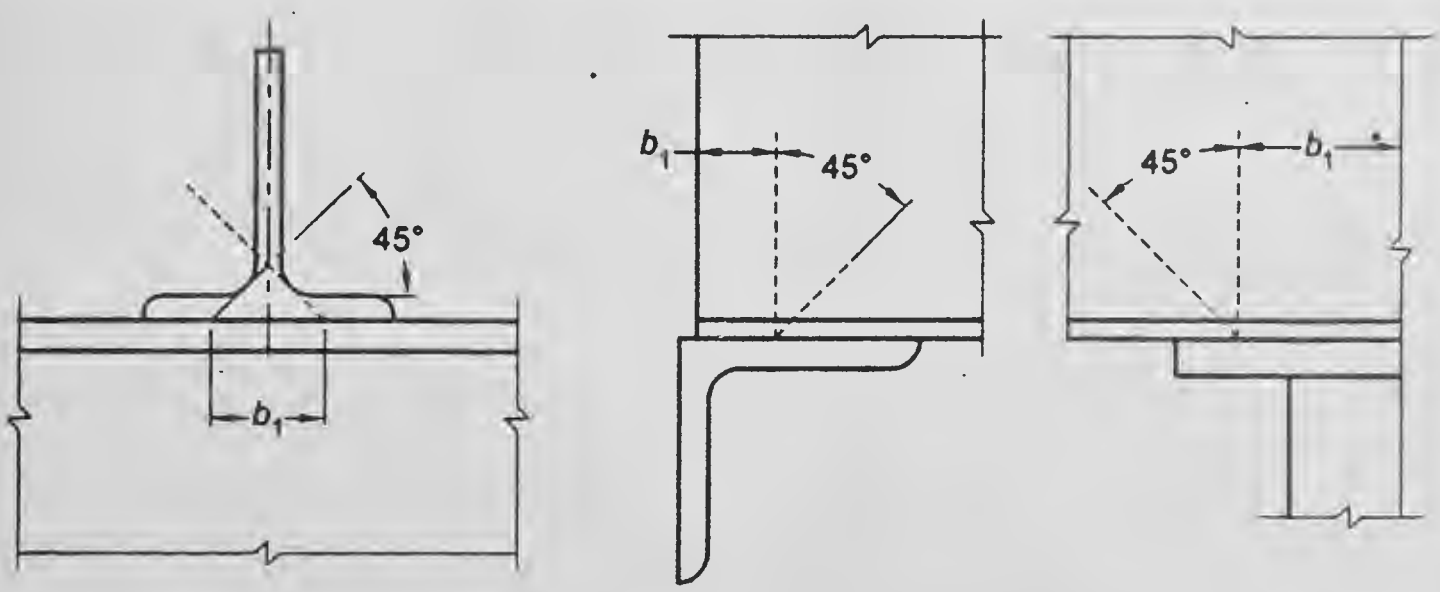

FIG. 15 STIFF BEARING LENGTH, b_1

14.7.2.4 *Minimum stiffeners*

Transverse web stiffeners not subject to external loads or moments should have a second moment of area, I_s about the centreline of the web, if stiffeners are on both sides of the web and about the face of the web , if single stiffener on only one side of the web is used such that:

$$\text{if } c/d \geq \sqrt{2}\,,\ I_s \geq 0.75\, d t_w^3\,, \text{ and}$$

$$\text{if } c/d < \sqrt{2}\,,\ I_s \geq \frac{1.5\, d^3 t_w^3}{c^2}$$

where

d = depth of the web;

t_w = minimum required web thickness for spacing using tension field action, as given in **14.4.2.1**; and

c = actual stiffener spacing.

14.7.2.5 *Buckling check on intermediate transverse web stiffeners*

Stiffeners not subjected to external loads or moments should be checked for a stiffener force:

$$F_q = V - V_{cr} / \gamma_{m0} \leq F_{qd}$$

where

F_{qd} = design resistance of the intermediate stiffeners;

V = factored shear force adjacent to the stiffener; and

V_{cr} = shear buckling resistance of the web panel designed without using tension field action as given in **14.4.2.2** a).

Stiffeners subject to external loads and moments should meet the conditions for load carrying web stiffeners in **14.7.3**. In addition they should satisfy the following interaction expression:

$$\frac{F_q - F_x}{F_{qd}} + \frac{F_x}{F_{xd}} + \frac{M_q}{M_{yq}} \leq 1$$

where

F_q = stiffener force given above;

F_{qd} = design resistance of an intermediate web stiffener corresponding to buckling about an axis parallel to the web (*see* **14.7.1.5**);

F_x = external load or reaction at the stiffener;

F_{xd} = design resistance of a load carrying stiffener corresponding to buckling about axis parallel to the web (*see* **14.7.1.5**);

M_q = moment on the stiffener due to eccentrically applied load and transverse load, if any; and

M_{yq} = yield moment capacity of the stiffener based on its elastic modulus about its centroidal axis parallel to the web.

If $F_q < F_x$, then $(F_q - F_x)$ should be taken as zero;

14.7.2.6 *Connection of intermediate stiffeners to web*

Intermediate transverse stiffeners not subject to external loading should be connected to the web so as to withstand a shear between each component of the stiffener and the web (in kN/mm) of not less than:

$$t_w^2 / (5 b_s)$$

where

t_w = web thickness, in mm; and

b_s = outstand width of the stiffener, in mm.

For stiffeners subject to external loading, the shear between the web and the stiffener due to such loading has to be added to the above value.

Stiffeners not subject to external loads or moments may terminate clear of the tension flange and in such a situation the distance cut short from the line of the weld should not be more than $4t_w$.

14.7.3 *Load Carrying Stiffeners*

14.7.3.1 *Web check*

Load carrying web stiffeners should be provided where compressive forces applied through a flange by loads or reactions exceed the buckling strength, F_{cdw}, of the unstiffened web, calculated using the following:

The effective length of the web for evaluating the slenderness ratio is calculated as in **14.7.1.5**. The area of cross-section is taken as $(b_1+n_1)\, t_w$.

where

b_1 = width of stiff bearing on the flange (*see* **14.7.1.3**), and

n_1 = dispersion of the load through the web at 45°, to the level of half the depth of the cross-section.

The buckling strength of this web about axis parallel to the web is calculated as given in **13.1.2.1**, using curve 'c'.

14.7.4 *Bearing Stiffeners*

Bearing stiffeners should be provided for webs where forces applied through a flange by loads or reactions exceeding the local capacity of the web at its connection to the flange, F_w, given by:

$$F_w = (b_1 + n_2) t_w f_{yw} / \gamma_{m0}$$

where

b_1 = stiff bearing length (*see* **14.7.1.3**),

n_2 = length obtained by dispersion through the flange to the web junction at a slope of 1:2.5 to the plane of the flange.

t_w = thickness of the web, and

f_{yw} = yield stress of the web.

14.7.5 *Design of Load Carrying Stiffeners*

14.7.5.1 *Buckling check*

The external load or reaction, F_x on a stiffener should not exceed the buckling resistance, F_{xd} of the stiffener as given in **14.7.1.5**.

Where the stiffener also acts as an intermediate stiffener it should be checked for the effect of combined loads in accordance with **14.7.2.5**.

14.7.5.2 *Bearing check*

Load carrying web stiffeners should also be of sufficient size that the bearing strength of the stiffener, F_{psd}, given below is not less than the load transferred, F_x

$$F_{psd} = A_q f_{yq}/(0.8\gamma_{m0}) \geq F_x$$

where

F_x = external load or reaction,

A_q = area of the stiffener in contact with the flange, and

f_{yq} = yield stress of the stiffener.

14.7.6 *Design of Bearing Stiffeners*

Bearing stiffeners should be designed for the applied load or reaction less the local capacity of the web as given in **14.7.4**. Where the web and the stiffener material are of different strengths the lesser value should be assumed to calculate the capacity of the web and the stiffener. Bearing stiffeners should project nearly as much as the overhang of the flange through which load is transferred.

14.7.7 *Design of Diagonal Stiffeners*

Diagonal stiffeners should be designed to carry the portion of the applied shear and bearing that exceeds the capacity of the web.

Where the web and the stiffener are of different strengths, the value for design should be taken as given in **14.7.6**.

14.7.8 *Design of Tension Stiffeners*

Tension stiffeners should be designed to carry the portion of the applied load or reaction less the capacity of the web as given in **14.7.4** for bearing stiffeners.

Where the web and the stiffener are of different strengths, the value for design should be taken as given in **14.7.6**.

14.7.9 *Torsional Stiffeners*

Where bearing stiffeners are required to provide torsional restraint at the supports of the beam, they should meet the following criteria:

a) Conditions of **14.7.4**, and

b) Second moment of area of the stiffener section about the centerline of the web, I_s should be such that

$$I_s \geq 0.34\, \alpha_s D^3 T_{cf}$$

where

α_s = 1.006 for $L_{LT}/r_y \leq 50$;

= $0.3/(L_{LT}/r_y)$ for $50 < L_{LT}/r_y \leq 100$;

= $30/(L_{LT}/r_y)^2$ for $L_{LT}/r_y > 100$;

D = Overall depth of beam at support,

T_{cf} = Maximum thickness of compression flange in the span under consideration,

KL = Laterally unsupported effective length of the compression flange of the beam, and

r_y = Radius of gyration of the beam about the minor axis.

14.7.10 *Connection to Web of Load Carrying and Bearing Stiffeners*

Stiffeners, which resist loads or reactions applied through a flange, should be connected to the web by sufficient welds or fasteners to transmit a design force equal to the lesser of,

a) tension capacity of the stiffener; and

b) sum of the forces applied at the two ends of the stiffener when they act in the same direction or the larger of the forces when they act in opposite directions.

Stiffeners, which do not extend right across the web, should be of such length that the shear stress in the web due to the design force transmitted by the stiffener does not exceed the shear strength of the web. In addition, the capacity of the web beyond the end of the stiffener should be sufficient to resist the applied force.

14.7.11 *Connection to Flanges*

14.7.11.1 *In tension*

Stiffeners required to resist tension should be connected to the flange transmitting the load by continuous welds or non-slip fasteners.

14.7.11.2 *In compression*

Stiffeners required to resist compression should either be fitted against the loaded flange or connected by continuous welds or non-slip fasteners.

The stiffener should be fitted against or connected to both flanges when,

a) a load is applied directly over a support; or

b) it forms the end stiffener of a stiffened web; or

c) it acts as a torsion stiffener.

14.7.12 *Hollow Sections*

Where concentrated loads are applied to hollow sections consideration should be given to local stresses and deformations and the section reinforced as necessary.

14.7.13 *Horizontal Stiffeners*

Where horizontal stiffeners are used in addition to vertical stiffeners, they shall be as follows:

a) One horizontal stiffener shall be placed on the web at a distance from the compression flange equal to 1/5 of the distance from the compression flange angle, plate or tongue plate to the neutral axis when the thickness of the web is less than the limits specified in **14.6.1**. The stiffener shall be designed so that I_s is not less than $4ct_w^3$ where I_s and t_w are as defined in **14.7.2.4** and c is the actual distance between the vertical stiffeners;

b) A second horizontal stiffener (single or double) shall be placed at the neutral axis of the girder when the thickness of the web is less than the limit specified in **14.6.1**. This stiffener shall be designed so that I_s is not less than $d_2\, t_w^3$ where I_s and t_w are as defined in **14.7.2.4** and d_2 is twice the clear distance from the compression flange angles, plates or tongue plates to the neutral axis;

c) Horizontal web stiffeners shall extend between vertical stiffeners, but need not be continuous over them; and

d) Horizontal stiffeners may be in pairs arranged on each side of the web, or single located on one side of the web.

14.8 Box Girders

The design and detailing of box girders shall be such as to give full advantage of its higher load carrying capacity. Box girder shall be designed in accordance with specialist literature. The diaphragms and horizontal stiffeners should conform to **14.7.12** and **14.7.13**.

14.8.1 All diaphragms shall be connected so as to transfer the resultant shears to the web and flanges.

14.8.2 Where the concentrated or moving load does not act directly on top of the web, the local effect shall be considered in the design of flanges and the diaphragms.

14.9 Purlins and Sheeting Rails (Girts)

All purlins shall be designed in accordance with the requirements for beams as specified in **14.2.1** and **14.2.2**. The limitations of bending stress based on lateral instability of the compression flange shall be considered if the purlin does not receive adequate support from bracings and sheathings in the plane of compression flange. In any case the maximum bending moment shall not exceed the values specified in **14.2.1**. The calculated deflections should not exceed those permitted for the type of roof cladding used, as specified in **11.6.1**. In calculating the bending moment, advantage may be taken of the continuity of the purlin over supports. The bending about the two axes shall be determined separately and checked according to the biaxial bending requirements specified in Section 6(j).

14.10 Bending in a Non-principal Plane

14.10.1 When the flexural deflection of a member is constrained to a non-principal plane by lateral restraints preventing lateral deflection, then the force exerted by the restraints shall be determined, and the principal axes bending moments acting on the member shall be calculated from these forces and applied forces, by a rational analysis. The combined effect of bending about the principal axes shall satisfy the requirements of Section 6(j).

14.10.2 When the deflections of a member loaded in a non-principal plane are unconstrained; the principal axes bending moments shall be calculated by a rational analysis. The combined effect of bending about the principal axes shall satisfy the requirements of Section 6(j).

SECTION 6(j) MEMBER SUBJECTED TO COMBINED FORCES

15 MEMBER SUBJECTED TO COMBINED FORCES

15.1 General

This Section governs the design of members subjected to combined forces, such as shear force and bending, axial force and bending, or shear force, axial force and bending.

15.2 Combined Shear and Bending

15.2.1 No reduction in moment capacity of the section is necessary as long as the cross-section is not subjected to high shear force (factored value of applied shear force is less than or equal to 60 percent of the shear strength of the section as given in **14.4**). The moment capacity may be taken as, M_d (*see* **14.2**) without any reduction.

15.2.2 When the factored value of the applied shear force is high (exceeds the limit specified in **15.2.1**), the factored moment of the section should be less than the moment capacity of the section under higher shear force, M_{dv}, calculated as given below:

a) *Plastic or compact section*

$$M_{dv} = M_d - \beta(M_d - M_{fd}) \leq 1.2\, Z_e\, f_y/\gamma_{m0}$$

where

β = $(2V/V_d - 1)^2$,

M_d = plastic design moment of the whole section disregarding high shear force effect (*see* **14.2.1.2**) considering web buckling effects (*see* **14.2.1.1**),

V = factored applied shear force as governed by web yielding or web buckling,

V_d = design shear strength as governed by web yielding or web buckling (*see* **14.4.1** or **14.4.2**),

M_{fd} = plastic design strength of the area of the cross-section excluding the shear area, considering partial safety factor γ_{m0}, and

Z_e = elastic section modulus of the whole section.

b) *Semi-compact section*

$$M_{dv} = Z_e f_y/\gamma_{m0}$$

15.3 Combined Axial Force and Bending Moment

Under combined axial force and bending moment, section strength as governed by material failure and member strength as governed by buckling failure shall be checked in accordance with **15.3.1** and **15.3.2** respectively.

15.3.1 *Section Strength*

15.3.1.1 *Plastic and compact sections*

In the design of members subjected to combined axial force (tension or compression) and bending moment, the following should be satisfied:

$$\left(\frac{M_y}{M_{ndy}}\right)^{\alpha_1} + \left(\frac{M_z}{M_{ndz}}\right)^{\alpha_2} \leq 1.0$$

Conservatively, the following equation may also be used under combined axial force and bending moment:

$$\frac{N}{N_d} + \frac{M_y}{M_{dy}} + \frac{M_z}{M_{dz}} \leq 1.0$$

where

M_y, M_z = factored applied moments about the minor and major axis of the cross-section, respectively;

M_{ndy}, M_{ndz} = design reduced flexural strength under combined axial force and the respective uniaxial moment acting alone (*see* **15.3.1.2**);

N = factored applied axial force (Tension, T or Compression, P);

N_d = design strength in tension, T_d as obtained from **12** or in compression due to yielding given by $N_d = A_g f_y/\gamma_{m0}$;

M_{dy}, M_{dz} = design strength under corresponding moment acting alone (*see* **14.2**);

A_g = gross area of the cross-section;

α_1, α_2 = constants as given in Table 17; and

γ_{m0} = partial factor of safety in yielding.

15.3.1.2 For plastic and compact sections without bolts holes, the following approximations may be used for evaluating M_{ndy} and M_{ndz}:

a) *Plates*

$$M_{nd} = M_d(1 - n^2)$$

b) *Welded I or H-sections*

$$M_{ndy} = M_{dy}\left[1 - \left(\frac{n-a}{1-a}\right)^2\right] \leq M_{dy}, \text{where } n \geq a$$

$$M_{ndz} = M_{dz}(1 - n)/(1 - 0.5a) \leq M_{dz}$$

where

$$n = N/N_d \text{ and } a = (A - 2\,b\,t_f)/A \leq 0.5$$

c) *For standard I or H sections*

$$M_{ndz} = 1.11\, M_{dz}(1 - n) \leq M_{dz}$$

for $n \leq 0.2$. $M_{ndy} = M_{dy}$

for $n > 0.2$, $M_{ndy} = 1.56\, M_{dy}(1 - n)(n + 0.6)$

$M_{ndz} = 1.11\, M_{dz}(1 - n) \leq M_{dz}$

d) *For rectangular hollow sections and welded box sections*

When the section is symmetric about both axes and without bolt holes

$$M_{ndy} = M_{dy}(1 - n)/(1 - 0.5a_f) \leq M_{dy}$$

$$M_{ndz} = M_{dz}(1 - n)/(1 - 0.5a_w) \leq M_{dz}$$

where

a_w = $(A - 2\,b\,t_f)/A \leq 0.5$

a_f = $(A - 2\,h\,t_w)/A \leq 0.5$

e) *Circular hollow tubes without bolt holes*

$$M_{nd} = 1.04\, M_d(1 - n^{1.7}) \leq M_d$$

Table 17 Constants a_1 and $_2$

(*Clause* 15.3.1.1)

Sl No. (1)	Section (2)	α_1 (3)	α_2 (4)
i)	I and channel	$5n \geq 1$	2
ii)	Circular tubes	2	2
iii)	Rectangular tubes	$1.66/(1-1.13n^2) \leq 6$	$1.66/(1-1.13n^2) \leq 6$
iv)	Solid rectangles	$1.73 + 1.8n^3$	$1.73+1.8\,n^3$

NOTE — $n = N/N_d$.

15.3.1.3 *Semi-compact section*

In the absence of high shear force (*see* **15.2.1**), semi-compact section design is satisfactory under combined axial force and bending, if the maximum longitudinal stress under combined axial force and bending, f_x satisfies the following criteria:

$$f_x \leq f_y / \gamma_{m0}$$

For cross-section without holes, the above criteria reduces to,

$$\frac{N}{N_d} + \frac{M_y}{M_{dy}} + \frac{M_z}{M_{dz}} \leq 1.0$$

where

N_d, M_{dy}, M_{dz} are as defined in **15.3.1.1**.

15.3.2 *Overall Member Strength*

Members subjected to combined axial force and bending moment shall be checked for overall buckling failure as given in this section.

15.3.2.1 *Bending and axial tension*

The reduced effective moment, M_{eff}, under tension and bending calculated as given below, should not exceed the bending strength due to lateral torsional buckling, M_d (*see* **14.2.2**),

$$M_{eff} = \left[M - \psi\, T\, Z_{ec} / A\right] \leq M_d$$

where

M, T = factored applied moment and tension, respectively;

A = area of cross-section;

Z_{ec} = elastic section modulus of the section with respect to extreme compression fibre; and

ψ = 0.8, if T and M can vary independently, or otherwise

= 1.0.

15.3.2.2 *Bending and axial compression*

Members subjected to combined axial compression and biaxial bending shall satisfy the following interaction relationships:

$$\frac{P}{P_{dy}} + K_y \frac{C_{my} M_y}{M_{dy}} + K_{LT} \frac{M_z}{M_{dz}} \leq 1.0$$

$$\frac{P}{P_{dz}} + 0.6 K_y \frac{C_{my} M_y}{M_{dy}} + K_z \frac{C_{mz} M_z}{M_{dz}} \leq 1.0$$

where

C_{my}, C_{mz} = equivalent uniform moment factor as per Table 18;

P = applied axial compression under factored load;

M_y, M_z = maximum factored applied bending moments about y and z-axis of the member, respectively;

P_{dy}, P_{dz} = design strength under axial compression as governed by buckling about minor (y) and major (z) axis, respectively;

M_{dy}, M_{dz} = design bending strength about y (minor) or z (major) axis considering laterally unsupported length of the cross-section [*see* Section 6(h)];

K_y = $1 + (\lambda_y - 0.2)n_y \leq 1 + 0.8\, n_y$;

K_z = $1 + (\lambda_z - 0.2)n_z \leq 1 + 0.8\, n_z$, and

$$K_{LT} = 1 - \frac{0.1\lambda_{LT} n_y}{(C_{mLT} - 0.25)} \geq 1 - \frac{0.1 n_y}{(C_{mLT} - 0.25)}$$

where

n_y, n_z = ratio of actual applied axial force to the design axial strength for buckling about the y and z-axis, respectively, and

C_{mLT} = Equivalent uniform moment factor for lateral torsional buckling as per Table 18 corresponding to the actual moment gradient between lateral supports against torsional deformation in the critical region under consideration.

SECTION 6(k) CONNECTIONS

16 CONNECTIONS

16.1 General

16.1.1 This Section deals with the design and detailing requirements for joints between members. Connection elements consist of components such as cleats, gusset plates, brackets, connecting plates and connectors such as rivets, bolts, pins, and welds. The connections in a structure shall be designed so as to be consistent with the assumptions made in the analysis of the structure and comply with the requirements specified in this

Table 18 Equivalent Uniform Moment Factor

(*Clause* 9.3.2.2)

Bending Moment Diagram	Range		C_{my}, C_{mz}, C_m	
			Uniform Loading	Concentrated Load
(1)	(2)		(3)	(4)
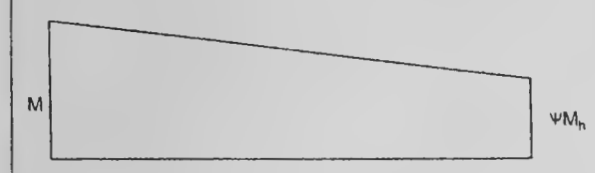	$-1 \le \psi \le 1$		$0.6 + 0.4\,\psi \ge 0.4$	
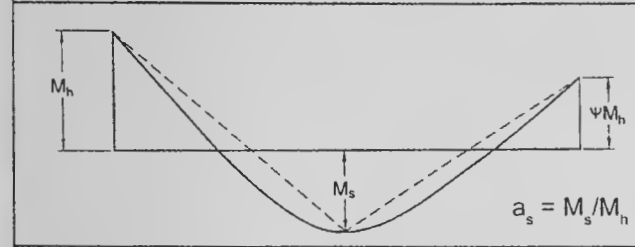	$0 \le \alpha_s \le 1$	$-1 \le \psi \le 1$	$0.2 + 0.8\,\alpha_s \ge 0.4$	$0.2 + 0.8\,\alpha_s \ge 0.4$
	$-1 \le \alpha_s \le 0$	$0 \le \psi \le 1$	$0.1 - 0.8\,\alpha_s \ge 0.4$	$-0.8\,\alpha_s \ge 0.4$
		$-1 \le \psi \le 0$	$0.1(1-\psi) - 0.8\,\alpha_s \ge 0.4$	$0.2(1-\psi) - 0.8\,\alpha_s \ge 0.4$
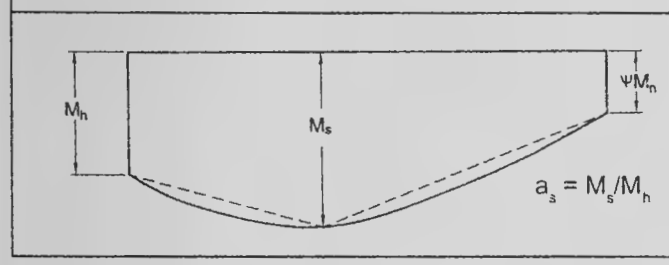	$0 \le \alpha_h \le 1$	$-1 \le \psi \le 1$	$0.95 - 0.05\,\alpha_h$	$0.90 + 0.10\,\alpha_h$
	$-1 \le \alpha_h \le 0$	$0 \le \psi \le 1$	$0.95 + 0.05\,\alpha_h$	$0.90 + 0.10\,\alpha_h$
		$-1 \le \psi \le 0$	$0.95 + 0.05\,\alpha_h\,(1+2\,\psi)$	$0.90 + 0.1\,\alpha_h\,(1+2\,\psi)$

For members with sway buckling mode, the equivalent uniform moment factor $C_{my} = C_{mz} = 0.9$.

C_{my}, C_{mz}, C_{mMLT} shall be obtained according to the bending moment diagram between the relevant braced points

Moment factor	Bending axis	Points braced in direction
C_{my}	z-z	y-y
C_{mz}	y-y	z-z
C_{mLT}	z-z	z-z

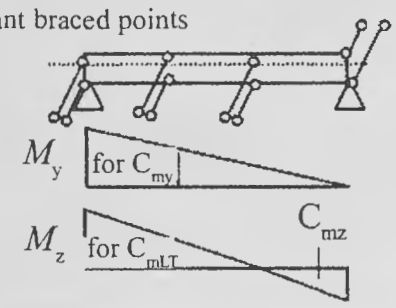

section. Connections shall be capable of transmitting the calculated design actions.

16.1.2 Where members are connected to the surface of a web or the flange of a section, the ability of the web or the flange to transfer the applied forces locally should be checked and where necessary, local stiffening provided.

16.1.3 Ease of fabrication and erection should be considered in the design of connections. Attention should be paid to clearances necessary for field erection, tolerances, tightening of fasteners, welding procedures, subsequent inspection, surface treatment and maintenance.

16.1.4 The ductility of steel assists the distribution of forces generated within a joint. Effects of residual stresses and stresses due to tightening of fasteners and normal tolerances of fit-up need not therefore be considered in connection design, provided ductile behaviour is ensured.

16.1.5 In general, use of different forms of fasteners to transfer the same force shall be avoided. However, when different forms of fasteners are used to carry a shear load or when welding and fasteners are combined, then one form of fastener shall be normally designed to carry the total load. Nevertheless, fully tensioned friction grip bolts may be designed to share the load with welding, provided the bolts are fully tightened to develop necessary pretension after welding.

16.1.6 The partial safety factor in the evaluation of design strength of connections shall be taken as given in Table 5.

16.2 Location Details of Fasteners

16.2.1 *Clearances for Holes for Fasteners*

Bolts may be located in standard size, over size, short slotted or long slotted hole, as follows.

a) *Standard clearance hole* — Except where fitted bolts, bolts in low-clearance or oversize holes are specified, the diameter of standard clearance holes for fasteners shall be as given in Table 19.

b) *Oversize hole* — Holes of size larger than the standard clearance holes, as given in Table 19 may be used in slip resistant connections and

hold down bolted connections, only where specified, provided the oversize

c) Holes in the outer ply is covered by a cover plate of sufficiently large size and thickness and having a hole not larger than the standard clearance hole (and hardened washer in slip resistant connections).

d) *Short and long slots* — Slotted holes of size larger than the standard clearance hole, as given in Table 19 may be used in slip resistant connections and hold down bolted connections, only where specified, provided the oversize holes in the outer ply is covered by a cover plate of sufficiently large size and thickness and having a hole of size not larger than the standard clearance hole (and hardened washer in slip resistant connection).

Table 19 Clearances for Fastener Holes

(*Clause* 16.2.1)

Sl No.	Nominal Size of Fastener, *d* mm	Size of the Hole = Nominal Diameter of the Fastener + Clearances mm			
		Standard Clearance in Diameter and Width of Slot	Over Size Clearance in Diameter	Clearance in the Length of the Slot	
				Short Slot	Long Slot
(1)	(2)	(3)	(4)	(5)	(6)
i)	12-14	1.0	3.0	4.0	2.5 *d*
ii)	16-22	2.0	4.0	6.0	2.5 *d*
iii)	24	2.0	6.0	8.0	2.5 *d*
iv)	Larger than 24	3.0	8.0	10.0	2.5 *d*

16.2.2 *Minimum Spacing*

The distance between centres of fasteners shall not be less than 2.5 times the nominal diameter of the fastener.

16.2.3 *Maximum Spacing*

16.2.3.1 The distance between the centres of any two adjacent fasteners shall not exceed 32*t* or 300 mm, whichever is less, where *t* is the thickness of the thinner plate.

16.2.3.2 The distance between the centres of two adjacent fasteners (pitch) in a line lying in the direction of stress, shall not exceed 16*t* or 200 mm, whichever is less, in tension members and 12*t* or 200 mm, whichever is less, in compression members; where *t* is the thickness of the thinner plate. In the case of compression members wherein forces are transferred through butting faces, this distance shall not exceed 4.5 times the diameter of the fasteners for a distance equal to 1.5 times the width of the member from the butting faces.

16.2.3.3 The distance between the centres of any two consecutive fasteners in a line adjacent and parallel to an edge of an outside plate shall not exceed 100 mm plus 4*t* or 200 mm, whichever is less, in compression and tension members; where *t* is the thickness of the thinner outside plate.

16.2.3.4 When fasteners are staggered at equal intervals and the gauge does not exceed 75 mm, the spacing specified in **16.2.3.2** and **16.2.3.3** between centres of fasteners may be increased by 50 percent, subject to the maximum spacing specified in **16.2.3.1**.

16.2.4 *Edge and End Distances*

16.2.4.1 The edge distance is the distance at right angles to the direction of stress from the centre of a hole to the adjacent edge. The end distance is the distance in the direction of stress from the centre of a hole to the end of the element.

In slotted holes, the edge and end distances should be measured from the edge or end of the material to the centre of its end radius or the centre line of the slot, whichever is smaller. In oversize holes, the edge and end distances should be taken as the distance from the relevant edge/end plus half the diameter of the standard clearance hole corresponding to the fastener, less the nominal diameter of the oversize hole.

16.2.4.2 The minimum edge and end distances from the centre of any hole to the nearest edge of a plate shall not be less than 1.7 times the hole diameter in case of sheared or hand-flame cut edges; and 1.5 times the hole diameter in case of rolled, machine-flame cut, sawn and planed edges.

16.2.4.3 The maximum edge distance to the nearest line of fasteners from an edge of any un-stiffened part should not exceed $12t\varepsilon$, where $\varepsilon = (250/f_y)^{1/2}$ and *t* is the thickness of the thinner outer plate. This would not apply to fasteners interconnecting the components of back to back tension members. Where the members are exposed to corrosive influences, the maximum edge distance shall not exceed 40 mm plus 4*t*, where *t* is the thickness of thinner connected plate.

16.2.5 *Tacking Fasteners*

16.2.5.1 In case of members covered under **16.2.4.3**, when the maximum distance between centres of two adjacent fasteners as specified in **16.2.4.3** is exceeded, tacking fasteners not subjected to calculated stress shall be used.

16.2.5.2 Tacking fasteners shall have spacing in a line not exceeding 32 times the thickness of the thinner outside plate or 300 mm, whichever is less. Where the plates are exposed to the weather, the spacing in line shall not exceed 16 times the thickness of the thinner

outside plate or 200 mm, whichever is less. In both cases, the distance between the lines of fasteners shall not be greater than the respective pitches.

16.2.5.3 All the requirements specified in **16.2.5.2** shall generally apply to compression members, subject to the stipulations in Section 6(g) affecting the design and construction of compression members.

16.2.5.4 In tension members [*see* Section 6(f)] composed of two flats, angles, channels or tees in contact back to back or separated back to back by a distance not exceeding the aggregate thickness of the connected parts, tacking fasteners with solid distance pieces shall be provided at a spacing in line not exceeding 1 000 mm.

16.2.5.5 For compression members covered in Section 6(g), tacking fasteners in a line shall be spaced at a distance not exceeding 600 mm.

16.2.6 *Countersunk Heads*

For countersunk heads, one-half of the depth of the countersinking shall be neglected in calculating the length of the fastener in bearing in accordance with **16.3.3**. For fasteners in tension having countersunk heads, the tensile strength shall be reduced by 33.3 percent. No reduction is required to be made in shear strength calculations.

16.3 Bearing Type Bolts

16.3.1 *Effective Areas of Bolts*

16.3.1.1 Since threads can occur in the shear plane, the area A_e for resisting shear should normally be taken as the net tensile stress area, A_n of the bolts. For bolts where the net tensile stress area is not defined, A_n shall be taken as the area at the root of the threads.

16.3.1.2 Where it can be shown that the threads do not occur in the shear plane, A_e may be taken as the cross-section area, A_s at the shank.

16.3.1.3 In the calculation of thread length, allowance should be made for tolerance and thread run off.

16.3.2 A bolt subjected to a factored shear force (V_{sb}) shall satisfy the condition

$$V_{sb} \leq V_{db}$$

where V_{db} is the design strength of the bolt, taken as the smaller of the value as governed by shear, V_{dsb} (*see* **16.3.3**) and bearing, V_{dpb} (*see* **16.3.4**).

16.3.3 *Shear Capacity of Bolt*

The design strength of the bolt, V_{dsb} as governed by shear strength is given by:

$$V_{dsb} = V_{nsb} / \gamma_{mb}$$

where

V_{nsb} = nominal shear capacity of a bolt, calculated as follows:

$$V_{nsb} = \frac{f_u}{\sqrt{3}}\left(n_n A_{nb} + n_s A_{sb}\right)$$

where

f_u = ultimate tensile strength of a bolt;

n_n = number of shear planes with threads intercepting the shear plane;

n_s = number of shear planes without threads intercepting the shear plane;

A_{sb} = nominal plain shank area of the bolt; and

A_{nb} = net shear area of the bolt at threads, may be taken as the area corresponding to root diameter at the thread.

16.3.3.1 *Long joints*

When the length of the joint, l_j of a splice or end connection in a compression or tension element containing more than two bolts (that is, the distance between the first and last rows of bolts in the joint, measured in the direction of the load transfer) exceeds $15d$ in the direction of load, the nominal shear capacity (*see* **16.3.2**), V_{db} shall be reduced by the factor β_{lj}, given by:

$$\beta_{lj} = 1.075 - l_j / (200\, d) \qquad \text{but } 0.75 \leq \beta_{lj} \leq 1.0$$

$$= 1.075 - 0.005(l_j / d)$$

where

d = Nominal diameter of the fastener.

NOTE — This provision does not apply when the distribution of shear over the length of joint is uniform, as in the connection of web of a section to the flanges.

16.3.3.2 *Large grip lengths*

When the grip length, l_g (equal to the total thickness of the connected plates) exceeds 5 times the diameter, d of the bolts, the design shear capacity shall be reduced by a factor b_{lg}, given by:

$$\beta_{lg} = 8d / (3d + l_g) = 8/(3 + l_g/d)$$

β_{lg} shall not be more than β_{lj} given in **16.3.3.1**. The grip length, l_g shall in no case be greater than $8d$.

16.3.3.3 *Packing plates*

The design shear capacity of bolts carrying shear through a packing plate in excess of 6 mm shall be decreased by a factor, β_{pk} given by:

$$\beta_{pk} = (1 - 0.012\,5 t_{pk})$$

where

t_{pk} = thickness of the thicker packing, in mm.

16.3.4 *Bearing Capacity of the Bolt*

The design bearing strength of a bolt on any plate, V_{dpb} as governed by bearing is given by:

$$V_{dpb} = V_{npb} / \gamma_{mb}$$

where

V_{npb} = nominal bearing strength of a bolt
= $2.5\, k_b\, d\, t\, f_u$

where

k_b is smaller of $\frac{e}{3d_0}$, $\frac{p}{3d_0} - 0.25$, $\frac{f_{ub}}{f_u}$, 1.0;

e, p = end and pitch distances of the fastener along bearing direction;

d_0 = diameter of the hole;

f_{ub}, f_u = ultimate tensile stress of the bolt and the ultimate tensile stress of the plate, respectively;

d = nominal diameter of the bolt; and

t = summation of the thicknesses of the connected plates experiencing bearing stress in the same direction, or if the bolts are countersunk, the thickness of the plate minus one half of the depth of countersinking.

The bearing resistance (in the direction normal to the slots in slotted holes) of bolts in holes other than standard clearance holes may be reduced by multiplying the bearing resistance obtained as above, V_{npb}, by the factors given below:

a) Over size and short slotted holes : 0.7, and
b) Long slotted holes : 0.5.

NOTE — The block shear of the edge distance due to bearing force may be checked as given in **12.4**.

16.3.5 *Tension Capacity*

A bolt subjected to a factored tensile force, T_b shall satisfy,

$$T_b \leq T_{db}$$

where

$T_{db} = T_{nb} / \gamma_{mb}$

T_{nb} = nominal tensile capacity of the bolt, calculated as:

$$T_{nb} = 0.90 f_{ub} A_n < f_{yb} A_{sb} (\gamma_{mb} / \gamma_{m0})$$

where

f_{ub} = ultimate tensile stress of the bolt,

f_{yb} = yield stress of the bolt,

A_n = net tensile stress area as specified in the appropriate Indian Standard (for bolts where the tensile stress area is not defined, A_n shall be taken as the area at the bottom of the threads), and

A_{sb} = shank area of the bolt.

16.3.6 *Bolt Subjected to Combined Shear and Tension*

A bolt required to resist both design shear force (V_{sd}) and design tensile force (T_b) at the same time shall satisfy,

$$\left(\frac{V_{sb}}{V_{db}}\right)^2 + \left(\frac{T_b}{T_{db}}\right)^2 \leq 1.0$$

where

V_{sb} = factored shear force acting on the bolt,

V_{db} = design shear capacity (*see* **16.3.2**),

T_b = factored tensile force acting on the bolt, and

T_{db} = design tension capacity (*see* **16.3.5**).

16.4 Friction Grip Type Bolting

16.4.1 In friction grip type bolting, initial pretension in bolt (usually high strength) develops clamping force at the interfaces of elements being joined. The frictional resistance to slip between the plate surfaces subjected to clamping force opposes slip due to externally applied shear. Friction grip type bolts and nuts shall conform to the accepted standard [6-6(37)]. Their installation procedures shall conform to good practice [6-6(15)].

16.4.2 Where slip between bolted plates cannot be tolerated at working loads/strength limit states loads (slip critical connections), the requirements of **16.4.3** shall be satisfied at service and strength limit states loads, respectively. However, the requirements of **16.4.4** shall be satisfied by all connections at the strength limit states.

16.4.3 *Slip Resistance*

Design for friction type bolting, where slip resistance is required at factored design force V_{sf}, shall satisfy the following:

$$V_{sf} \leq V_{dsf}$$

where

$V_{dsf} = V_{nsf} / \gamma_{mf}$

V_{nsf} = nominal shear capacity of a bolt as governed by slip for friction type connection, calculated as follows:

$$V_{nsf} = \mu_f n_e K_h F_o$$

where

μ_f = coefficient of friction (slip factor) as specified in Table 20 ($\mu_f \leq 0.55$);

n_e = number of effective interfaces offering frictional resistance to slip;

K_h = 1.0 for fasteners in clearance holes,

= 0.85 for fasteners in oversized and short slotted holes and for fasteners in long slotted holes loaded perpendicular to the slot,

= 0.7 for fasteners in long slotted holes loaded parallel to the slot;

γ_{mf} = 1.10 (if slip resistance is designed at service load),

= 1.25 (if slip resistance is designed at ultimate load);

F_o = minimum bolt tension (proof load) at installation and may be taken as $A_{nb} f_o$,

A_{nb} = net area of the bolt at threads, and

f_o = proof stress (= $0.70 f_{ub}$).

NOTE — V_{nsf} may be evaluated at a service load or ultimate load using appropriate partial safety factors, depending upon whether slip resistance is required at service load or ultimate load.

Table 20 Typical Average Values for Coefficient of Friction (μ_f)

(*Clause* 16.4.3)

Sl No.	Treatment of Surface	Coefficient of Friction μ_f
(1)	(2)	(3)
i)	Surfaces not treated	0.20
ii)	Surfaces blasted with short or grit with any loose rust removed, no pitting	0.50
iii)	Surfaces blasted with shot or grit and hot-dip galvanized	0.10
iv)	Surfaces blasted with shot or grit and spray-metallized with zinc (thickness 50-70 μm)	0.25
v)	Surfaces blasted with shot or grit and painted with ethyl zinc silicate coat (thickness 30-60 μm)	0.30
vi)	Sand blasted surface, after light rusting	0.52
vii)	Surfaces blasted with shot or grit and painted with ethyl zinc silicate coat (thickness 60-80 μm)	0.30
viii)	Surfaces blasted with shot or grit and painted with alkali zinc silicate coat (thickness 60-80 μm)	0.30
ix)	Surface blasted with shot or grit and spray metallized with aluminium (thickness > 50 μm)	0.50
x)	Clean mill scale	0.33
xi)	Sand blasted surface	0.48
xii)	Red lead painted surface	0.1

16.4.3.1 *Long joints*

The provision for the long joints in **16.3.3.1** shall apply to friction grip connections also.

16.4.4 *Capacity after Slipping*

When friction type bolts are designed not to slip only under service loads, the design capacity at ultimate load may be calculated as per bearing type connection (*see* **16.3.2** and **16.3.3**).

NOTE — The block shear resistance of the edge distance due to bearing force may be checked as given in **12.4**.

16.4.5 *Tension Resistance*

A friction bolt subjected to a factored tension force (T_f) shall satisfy:

$$T_f \leq T_{df}$$

where

T_{df} = T_{nf} / γ_{mf}

T_{nf} = nominal tensile strength of the friction bolt, calculated as:

$$T_{nf} = 0.9 f_{ub} A_n \leq f_{yb} A_{sb} (\gamma_{m1} / \gamma_{m0})$$

where

f_{ub} = ultimate tensile stress of the bolt;

A_n = net tensile stress area as specified in various parts of the accepted standard [6-6(38)] (for bolts where the tensile stress area is not defined, A_n shall be taken as the area at the root of the threads);

A_{sb} = shank area of the bolt; and

γ_{mf} = partial factor of safety.

16.4.6 *Combined Shear and Tension*

Bolts in a connection for which slip in the serviceability limit state shall be limited, which are subjected to a tension force, T, and shear force, V, shall satisfy:

$$\left(\frac{V_{sf}}{V_{df}}\right)^2 + \left(\frac{T_f}{T_{df}}\right)^2 \leq 1.0$$

where

V_{sf} = applied factored shear at design load;

V_{df} = design shear strength;

T_f = externally applied factored tension at design load; and

T_{df} = design tension strength.

16.4.7 Where prying force, Q as illustrated in Fig. 16 shall be calculated as given below and added to the tension in the bolt:

$$Q = \frac{l_v}{2 l_e}\left[T_e - \frac{\beta \eta f_o b_e t^4}{27 l_e l_v^2}\right]$$

where

l_v = distance from the bolt centreline to the toe of the fillet weld or to half the root radius for a rolled section, and

l_e = distance between prying force and bolt

centreline and is the minimum of either the end distance or the value given by:

$$l_e = 1.1\, t \sqrt{\frac{\beta f_o}{f_y}}$$

where

β = 2, for non pre-tensioned bolt and 1, for pre-tensioned bolt;

η = 1.5;

b_e = effective width of flange per pair of bolts;

f_o = proof stress in consistent units; and

t = thickness of the end plate.

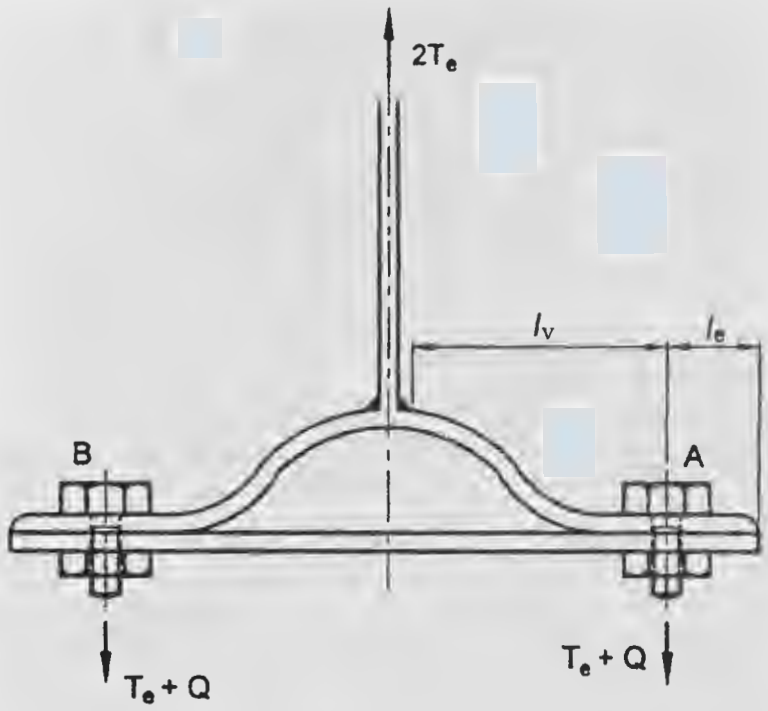

FIG. 16 COMBINED PRYING FORCE AND TENSION

16.5 Welds and Welding

16.5.1 *General*

Requirements of welds and welding shall conform to the accepted standards [6-6(39)], as appropriate.

16.5.1.1 *End returns*

Fillet welds terminating at the ends or sides of parts should be returned continuously around the corners for a distance of not less than twice the size of the weld, unless it is impractical to do so. This is particularly important on the tension end of parts carrying bending loads.

16.5.1.2 *Lap joint*

In the case of lap joints, the minimum lap should not be less than four times the thickness of the thinner part joined or 40 mm, whichever is more. Single end fillet should be used only when lapped parts are restrained from openings. When end of an element is connected only by parallel longitudinal fillet welds, the length of the weld along either edge should not be less than the transverse spacing between longitudinal welds.

16.5.1.3 A single fillet weld should not be subjected to moment about the longitudinal axis of the weld.

16.5.2 *Size of Weld*

16.5.2.1 The size of normal fillets shall be taken as the minimum weld leg size. For deep penetration welds, where the depth of penetration beyond the root run is a minimum of 2.4 mm, the size of the fillet should be taken as the minimum leg size plus 2.4 mm.

16.5.2.2 For fillet welds made by semi-automatic or automatic processes, where the depth of penetration is considerably in excess of 2.4 mm, the size shall be taken considering actual depth of penetration subject to agreement between the purchaser and the contractor.

16.5.2.3 The size of fillet welds shall not be less than 3 mm. The minimum size of the first run or of a single run fillet weld shall be as given in Table 21, to avoid the risk of cracking in the absence of preheating.

16.5.2.4 The size of butt weld shall be specified by the effective throat thickness.

16.5.3 *Effective Throat Thickness*

16.5.3.1 The effective throat thickness of a fillet weld shall not be less than 3 mm and shall generally not exceed 0.7*t*, or 1.0*t* under special circumstances, where *t* is the thickness of the thinner plate of elements being welded.

16.5.3.2 For the purpose of stress calculation in fillet welds joining faces inclined to each other, the effective throat thickness shall be taken as *K* times the fillet size, where *K* is a constant, depending upon the angle between fusion faces, as given in Table 22.

Table 21 Minimum Size of First Run or of a Single Run Fillet Weld

(*Clause* 16.5.2.3)

Sl No.	Thickness of Thicker Part mm		Minimum Size mm
	Over	Up to and Including	
(1)	(2)	(3)	(4)
i)	–	10	3
ii)	10	20	5
iii)	20	32	6
iv)	32	50	8 of first run 10 for minimum size of weld

NOTES

1 When the minimum size of the fillet weld given in the table is greater than the thickness of the thinner part, the minimum size of the weld should be equal to the thickness of the thinner part. The thicker part shall be adequately preheated to prevent cracking of the weld.

2 Where the thicker part is more than 50 mm thick, special precautions like preheating should be taken.

Table 22 Values of *K* for Different Angles Between Fusion Faces

(*Clause* 16.5.3.2)•

Angle Between Fusion Faces	60°-90°	91°-100°	101°-106°	107°-113°	114°-120°
Constant, *K*	0.70	0.65	0.60	0.55	0.50

16.5.3.3 The effective throat thickness of a complete penetration butt weld shall be taken as the thickness of the thinner part joined, and that of an incomplete penetration butt weld shall be taken as the minimum thickness of the weld metal common to the parts joined, excluding reinforcements.

16.5.4 *Effective Length or Area of Weld*

16.5.4.1 The effective length of fillet weld shall be taken as only that length which is of the specified size and required throat thickness. In practice the actual length of weld is made of the effective length shown in drawing plus two times the weld size, but not less than four times the size of the weld.

16.5.4.2 The effective length of butt weld shall be taken as the length of the continuous full size weld, but not less than four times the size of the weld.

16.5.4.3 The effective area of a plug weld shall be considered as the nominal area of the hole in the plane of the faying surface. These welds shall not be designed to carry stresses.

16.5.4.4 If the maximum length l_j of the side welds transferring shear along its length exceeds 150 times the throat size of the weld, t_t, the reduction in weld strength as per the long joint (*see* **16.5.7.3**) should be considered. For flange to web connection, where the welds are loaded for the full length, the above limitation would not apply.

16.5.5 *Intermittent Welds*

16.5.5.1 Unless otherwise specified, the intermittent fillet welding shall have an effective length of not less than four times the weld size, with a minimum of 40 mm.

16.5.5.2 The clear spacing between the effective lengths of intermittent fillet weld shall not exceed 12 and 16 times the thickness of thinner plate joined, for compression and tension joint, respectively, and in no case be more than 200 mm.

16.5.5.3 Unless otherwise specified, the intermittent butt weld shall have an effective length of not less than four times the weld size and the longitudinal space between the effective length of welds shall not be more than 16 times the thickness of the thinner part joined. The intermittent welds shall not be used in positions subject to dynamic, repetitive and alternating stresses.

16.5.6 *Weld Types and Quality*

For the purpose of this code, weld shall be fillet, butt, slot or plug or compound welds. Welding electrodes shall conform to the accepted standard [6-6(18)].

16.5.7 *Design Stresses in Welds*

16.5.7.1 *Shop welds*

16.5.7.1.1 *Fillet welds*

Design strength of a fillet weld, f_{wd} shall be based on its throat area and shall be given by:

$$f_{wd} = f_{wn} / \gamma_{mw}$$

where

$f_{wn} = f_u / \sqrt{3}$,

f_u = smaller of the ultimate stress of the weld or of the parent metal, and

γ_{mw} = partial safety factor (*see* Table 5).

16.5.7.1.2 *Butt welds*

Butt welds shall be treated as parent metal with a thickness equal to the throat thickness, and the stresses shall not exceed those permitted in the parent metal.

16.5.7.1.3 *Slot or plug welds*

The design shear stress on slot or plug welds shall be as per **16.5.7.1.1**.

16.5.7.2 *Site welds*

The design strength in shear and tension for site welds made during erection of structural members shall be calculated according to **16.5.7.1** but using a partial safety factor γ_{mw} of 1.5.

16.5.7.3 *Long joints*

When the length of the welded joint, l_j of a splice or end connection in a compression or tension element is greater than 150 t_t, the design capacity of weld (*see* **16.5.7.1.1**), f_{wd} shall be reduced by the factor:

$$\beta_{lw} = 1.2 - \frac{0.2 l_j}{150 t_t} \leq 1.0$$

where

l_j = length of the joint in the direction of the force transfer, and

t_t = throat size of the weld.

16.5.8 *Fillet Weld Applied to the Edge of a Plate or Section*

16.5.8.1 Where a fillet weld is applied to the square edge of a part, the specified size of the weld should generally be at least 1.5 mm less than the edge thickness

in order to avoid washing down of the exposed corner (*see* Fig. 17A).

16.5.8.2 Where the fillet weld is applied to the rounded toe of a rolled section, the specified size of the weld should generally not exceed 3/4 of the thickness of the section at the toe (*see* Fig. 17B).

16.5.8.3 Where the size specified for a fillet weld is such that the parent metal will not project beyond the weld, no melting of the outer cover or covers shall be allowed to occur to such an extent as to reduce the throat thickness (*see* Fig. 18)

16.5.8.4 When fillet welds are applied to the edges of a plate or section in members subject to dynamic loading, the fillet weld shall be of full size with its leg length equal to the thickness of the plate or section, with the limitations specified in **16.5.8.3**.

16.5.8.5 End fillet weld, normal to the direction of force shall be of unequal size with a throat thickness not less than 0.5*t*, where *t* is the thickness of the part, as shown in Fig. 19. The difference in thickness of the welds shall be negotiated at a uniform slope.

16.5.9 *Stresses Due to Individual Forces*

When subjected to either compressive or tensile or shear force alone, the stress in the weld is given by:

$$f_a \text{ or } q = \frac{P}{t_t\, l_w}$$

where

f_a = calculated normal stress due to axial force, in N/mm^2;

q = shear stress, in N/mm^2;

P = force transmitted (axial force N or the shear force Q);

t_t = effective throat thickness of weld, in mm; and

l_w = effective length of weld, in mm.

16.5.10 *Combination of Stresses*

16.5.10.1 *Fillet welds*

16.5.10.1.1 When subjected to a combination of normal and shear stress, the equivalent stress f_e shall satisfy the following:

$$f_e = \sqrt{f_a^2 + 3q^2} \le \frac{f_u}{\sqrt{3}\gamma_{mw}}$$

where

f_a = normal stresses, compression or tension, due to axial force or bending moment (*see* **16.5.9**), and

q = shear stress due to shear force or tension (*see* **16.5.9**).

16.5.10.1.2 Check for the combination of stresses need not be done for,

a) side fillet welds joining cover plates and flange plates; and

b) fillet welds where sum of normal and shear stresses does not exceed f_{wd} (*see* **16.5.7.1.1**).

16.5.10.2 *Butt welds*

16.5.10.2.1 Check for the combination of stresses in butt welds need not be carried out provided that,

a) butt welds are axially loaded, and

b) in single and double bevel welds the sum of normal and shear stresses does not exceed the design normal stress, and the shear stress does not exceed 50 percent of the design shear stress.

FIG. 17 FILLET WELDS ON SQUARE EDGE OF PLATE OR ROUND TOE OF ROLLED SECTION

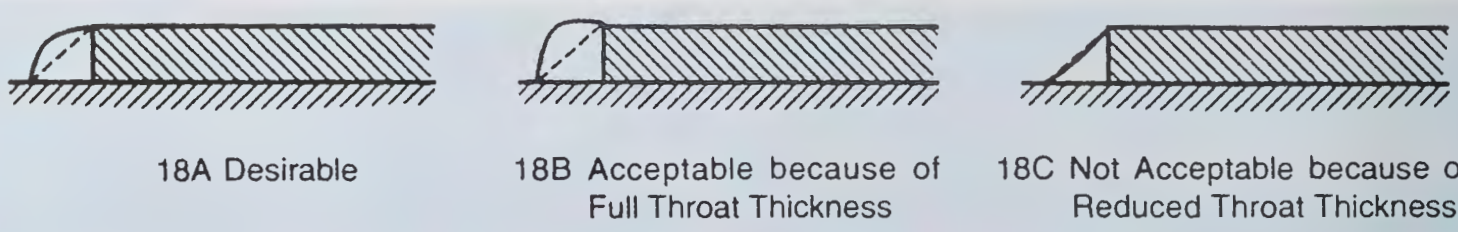

FIG. 18 FULL SIZE FILLET WELD APPLIED TO THE EDGE OF A PLATE OR SECTION

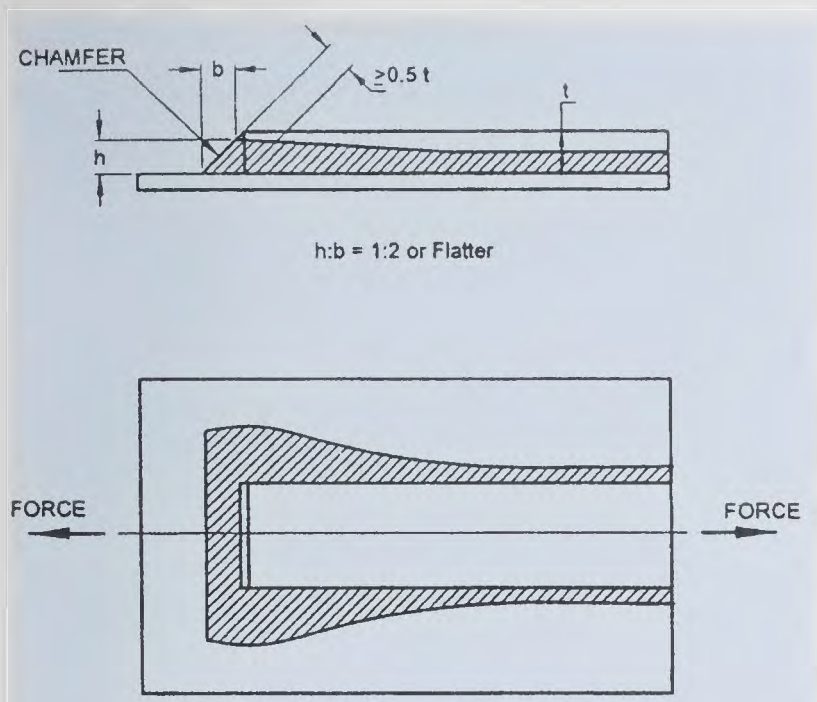

FIG. 19 END FILLET WELD NORMAL TO DIRECTION OR FORCE

16.5.10.2.2 *Combined bearing, bending and shear*

Where bearing stress, f_{br} is combined with bending (tensile or compressive), f_b and shear stresses, q under the most unfavorable conditions of loading in butt welds, the equivalent stress, f_e as obtained from the following formula, shall not exceed the values allowed for the parent metal:

$$f_e = \sqrt{f_b^2 + f_{br}^2 + f_b f_{br} + 3q^2}$$

where

f_e = equivalent stress;

f_b = calculated stress due to bending, in N/mm^2;

f_{br} = calculated stress due to bearing, in N/mm^2; and

q = shear stress, in N/mm^2.

16.5.11 Where a packing is welded between two members and is less than 6 mm thick, or is too thin to allow provision of adequate welds or to prevent buckling, the packing shall be trimmed flush with the edges of the element subject to the design action and the size of the welds along the edges shall be increased over the required size by an amount equal to the thickness of the packing. Otherwise, the packing shall extend beyond the edges and shall be fillet welded to the pieces between which it is fitted.

16.6 Design of Connections

Each element in a connection shall be designed so that the structure is capable of resisting the design actions. Connections and adjacent regions of the members shall be designed by distributing the design action effects such that the following requirements are satisfied:

a) Design action effects distributed to various elements shall be in equilibrium with the design action effects on the connection,

b) Required deformations in the elements of the connections are within their deformations capacities,

c) All elements in the connections and the adjacent areas of members shall be capable of resisting the design action effects acting on them, and

d) Connection elements shall remain stable under the design action effects and deformations.

16.6.1 Connections can be classified as rigid, semi-rigid and flexible for the purpose of analysis and design as per the recommendation in Annex E. Connections with sufficient rotational stiffness may be considered as rigid. Examples of rigid connections include flush end-plate connection and extended end-plate connections. Connections with negligible rotational stiffness may be considered as flexible (pinned). Examples of flexible connections include single and double web angle connections and header plate connections. Where a connection cannot be classified as either rigid or flexible, it shall be assumed to be semi-rigid. Examples of semi-rigid connections include top and seat angle connection and top and seat angle with single/double web angles.

16.6.2 Design shall be on the basis of any rational method supported by experimental evidence. Residual stresses due to installation of bolts or welding normally need not be considered in statically loaded structures. Connections in cyclically loaded structures shall be designed considering fatigue as given in Section 6(p). For earthquake load combinations, the connections shall be designed to withstand the calculated design action effects and exhibit required ductility as specified in Section 6(n).

16.6.3 Beam and column splice shall be designed in accordance with the recommendation given in **F-2** and **F-3**.

16.7 Minimum Design Action on Connection

Connections carrying design action effects, except for lacing connections, connections of sag rods, purlins and girts, shall be designed to transmit the greater of,

a) the design action in the member; and

b) the minimum design action effects expressed either as the value or the factor times the member design capacity for the minimum size of member required by the strength limit state, specified as follows:

1) *Connections in rigid construction* — A bending moment of at least 0.5 times the member design moment capacity.

2) *Connections to beam in simple construction* — A shear force of at least 0.15 times the member design shear capacity or 40 kN, whichever is lesser.

3) *Connections at the ends of tensile or compression member* — A force of at least 0.3 times the member design capacity.

4) *Splices in members subjected to axial tension* — A force of at least 0.3 times the member design capacity in tension.

5) *Splices in members subjected to axial compression* — For ends prepared for full contact in accordance with **23.7.1**, it shall be permissible to carry compressive actions by bearing on contact surfaces. When members are prepared for full contact to bear at splices, there shall be sufficient fasteners to hold all parts securely in place. The fasteners shall be sufficient to transmit a force of at least 0.15 times the member design capacity in axial compression.

   When members are not prepared for full contact, the splice material and its fasteners shall be arranged to hold all parts in line and shall be designed to transmit a force of at least 0.3 times the member design capacity in axial compression.

   In addition, splices located between points of effective lateral support shall be designed for the design axial force, P_d plus a design bending moment, not less than the design bending moment $M_d = P_d l_s/1\ 000$ where, l_s is the distance between points of effective lateral support.

6) *Splices in flexural members* — A bending moment of 0.3 times the member design capacity in bending. This provision shall not apply to splices designed to transmit shear force only.

   A splice subjected to a shear force only shall be designed to transmit the design shear force together with any bending moment resulting from the eccentricity of the force with respect to the centroid of the group.

7) *Splices in members subject to combined actions* – A splice in a member subject to a combination of design axial tension or design axial compression and design bending moment shall satisfy requirements in (4), (5) and (6), simultaneously.

For earthquake load combinations, the design action effects specified in this section may need to be increased to meet the required behaviour of the steel frame and shall comply with Section 6(n).

16.8 Intersections

Members or components meeting at a joint shall be arranged to transfer the design actions between the parts, wherever practicable, with their centroidal axes meeting at a point. Where there is eccentricity at joints, the members and components shall be designed for the design bending moments which result due to eccentricity.

The disposition of fillet welds to balance the design actions about the centroidal axis or axes for end connections of single angle, double angle and similar type members is not required for statically loaded members but is required for members, connection components subject to fatigue loading.

Eccentricity between the centroidal axes of angle members and the gauge lines for their bolted end connections may be neglected in statically loaded members, but shall be considered in members and connection components subject to fatigue loading.

16.9 Choice of Fasteners

Where slip in the serviceability limit state is to be avoided in a connection, high-strength bolts in a friction-type joint, fitted bolts or welds shall be used.

Where a joint is subjected to impact or vibration, either high strength bolts in a friction type joint or ordinary bolts with locking devices or welds shall be used.

16.10 Connection Components

Connection components (cleats, gusset plates, brackets and the like) other than connectors, shall have their capacities assessed using the provisions of Sections 6(e), 6(f), 6(g), 6(h) and 6(i), as applicable.

16.11 Analysis of a Bolt/Weld Group

16.11.1 *Bolt/Weld Group Subject to In-plane Loading*

16.11.1.1 *General method of analysis*

The design force in a bolt/weld or design force per unit length in a bolt/weld group subject to in-plane loading shall be determined in accordance with the following:

a) The connection plates shall be considered to be rigid and to rotate relative to each other about a point known as the instantaneous centre of rotation of the group.

b) In the case of a group subject to a pure couple only, the instantaneous centre of rotation coincides with the group centroid. In the case of in-plane shear force applied at the group centroid, the instantaneous centre of the rotation is at infinity and the design force is uniformly distributed throughout the group. In all other cases, either the results of independent analyses for a pure couple alone and for an in-plane shear force applied at the group centroid shall be superposed, or a recognized method of analysis shall be used.

c) The design force in a bolt or design force per unit length at any point in the group shall be assumed to act at right angles to the radius from that point to the instantaneous centre, and shall be taken as proportional to that radius.

16.11.2 *Bolt/Weld Group Subject to Out-of-Plane Loading*

16.11.2.1 *General method of analysis*

The design force of a bolt in bolt group or design force per unit length in the fillet weld group subject to out-of-plane loading shall be determined in accordance with the following:

a) Design force in the bolts or per unit length in the fillet weld group resulting from any shear force or axial force shall be considered to be equally shared by all bolts in the group or uniformly distributed over the length of the fillet weld group.

b) Design force resulting from a design bending moment shall be considered to vary linearly with distance from the relevant centroidal axes. The following shall also be considered:

   1) In bearing type of bolt group plates in the compression side of the neutral axis and only bolts in the tension side of the neutral axis may be considered for calculating the neutral axis and second moment of area.

   2) In the friction grip bolt group, only the bolts shall be considered in the calculation of neutral axis and second moment of area.

   3) The fillet weld group shall be considered in isolation from the connected element; for the calculation of centroid and second moment of the weld length.

16.11.2.2 *Alternative analysis*

The design force per unit length in a fillet weld/bolt group may alternatively be determined by considering the fillet weld group as an extension of the connected member and distributing the design forces among the welds of the fillet weld group so as to satisfy equilibrium between the fillet weld group and the elements of the connected member.

16.11.3 *Bolt/Weld Group Subject to In-Plane and Out-of-Plane Loading*

16.11.3.1 *General method of analysis*

The design force in a bolt or per unit length of the weld shall be determined by the superposition of analysis for in-plane and out-of-plane cases discussed in **16.11.1** and **16.11.2**.

16.11.3.2 *Alternative analysis*

The design force in a bolt or per unit length in the fillet weld group may alternatively be determined by considering the fillet weld group as an extension of the connected member and proportioning the design force per bolt or unit length in the weld group to satisfy equilibrium between the bolt/weld group and the elements of the connected member.

Force calculated in the most stressed bolt or highest force per unit length of the weld shall satisfy the strength requirements of **16.3**, **16.4** or **16.5**, as appropriate.

16.12 Lug Angles

16.12.1 Lug angles connecting outstanding leg of a channel-shaped member shall, as far as possible, be disposed symmetrically with respect to the section of the member.

16.12.2 In the case of angle members, the lug angles and their connections to the gusset or other supporting member shall be capable of developing a strength not less than 20 percent in excess of the force in the outstanding leg of the member, and the attachment of the lug angle to the main angle shall be capable of developing a strength not less than 40 percent in excess of the force in the outstanding leg of the angle.

16.12.3 In the case of channel members and the like, the lug angles and their connection to the gusset or other supporting member shall be capable of developing a strength of not less than 10 percent in excess of the force not accounted for by the direct connection of the member, and the attachment of the lug angles to the member shall be capable of developing 20 percent in excess of that force.

16.12.4 In no case shall fewer than two bolts, rivets or equivalent welds be used for attaching the lug angle to the gusset or other supporting member.

16.12.5 The effective connection of the lug angle shall, as far as possible terminate at the end of the member connected, and the fastening of the lug angle to the main member shall preferably start in advance of the

direct connection of the member to the gusset or other supporting member.

16.12.6 Where lug angles are used to connect an angle member, the whole area of the member shall be taken as effective notwithstanding the requirements of Section 6(f).

SECTION 6(m) WORKING STRESS DESIGN

17 WORKING STRESS DESIGN

17.1 General

17.1.1 General design requirements of Section 6(c) shall apply in this section.

17.1.2 Methods of structural analysis of Section 6(d) shall also apply to this section. The elastic analysis method shall be used in the working stress design.

17.1.3 The working stress shall be calculated applying respective partial safety factors for loads, specified in Table 4 for the limit states of serviceability.

17.1.4 In load combinations involving wind or seismic loads, the permissible stresses in steel structural members may be increased by 33 percent. For anchor bolts and construction loads this increase shall be limited to 25 percent. Such an increase in allowable stresses should not be considered if the wind or seismic load is the major load in the load combination (such as acting along with dead load alone).

17.2 Tension Members

17.2.1 *Actual Tensile Stress*

The actual tensile stress, f_t on the gross area of cross-section, A_g of plates, angles and other tension members shall be less than or equal to the smaller value of permissible tensile stresses, f_{at}, as given below:

Actual tensile stress, $f_t = T_s / A_g$

The permissible stress, f_{at} is smallest of the values as obtained below:

a) As governed by yielding of gross section:

$$f_{at} = 0.6 f_y$$

b) As governed by rupture of net section

1) *Plates under tension*:

$$f_{at} = 0.69\ T_{dn}/A_g$$

2) *Angles under tension*:

$$f_{at} = 0.69\ T_{dn}/A_g$$

c) As governed by block shear:

$$f_{at} = 0.69\ T_{db} / A_g$$

where

T_s = actual tension under working (service) load,

A_g = gross area,

T_{dn} = design strength in tension of respective plate/angle calculated in accordance with **12.3**, and

T_{db} = design block shear strength in tension of respective plate/angle calculated in accordance with **12.4**.

17.3 Compression Members

17.3.1 *Actual Compressive Stress*

The actual compressive stress, f_c at working (service) load, P_s of a compression member shall be less than or equal to the permissible compressive stress, f_{ac} as given below:

Actual compressive stress, $f_c = P_s / A_e$

The permissible compressive stress, $f_{ac} = 0.60 f_{cd}$

where

A_e = effective sectional area as defined in **13.3.2**, and

f_{cd} = design compressive stress as defined in **13.1.2.1** (for angles, *see* **13.5.1.2**), calculated without the partial safety factor, γ_{m0}.

17.3.2 *Design Details*

Design of the compression members shall conform to **13.3**.

17.3.3 *Column Bases*

The provisions of **13.4** shall be followed for the design of column bases, except that the thickness of a simple column base, t_s shall be calculated as:

$$t_s = \sqrt{3w\left(a^2 - 0.3b^2\right) / f_{bs}}$$

where

w = uniform pressure from below on the slab base due to axial compression;

a, b = larger and smaller projection of the slab base beyond the rectangle circumscribing the column, respectively; and

f_{bs} = permissible bending stress in column base equal to $0.75 f_y$.

17.3.4 *Angle Struts*

Provisions of **13.5** shall be used for design of angle struts, except that the limiting actual stresses shall be calculated in accordance with **17.3.1**.

17.3.5 *Laced and Battened Columns*

The laced and battened columns shall be designed in accordance with **13.6** and **13.7**, except that the actual stresses shall be less than the permissible stresses given in **17.3.1**.

17.4 Members Subjected to Bending

17.4.1 *Bending Stresses*

The actual bending tensile and compressive stresses, f_{bt}, f_{bc} at working (service) load moment, M_s of a bending member shall be less than or equal to the permissible bending stresses, f_{abt}, f_{abc}, respectively, as given herein. The actual bending stresses shall be calculated as:

$$f_{bc} = M_s / Z_{ec} \quad \text{and} \quad f_{bt} = M_s / Z_{et}$$

The permissible bending stresses, f_{abc} or f_{abt} shall be the smaller of the values obtained from the following:

a) *Laterally supported beams and beams bending about the minor axis*:

i) Plastic and compact sections:

$$f_{abc} \text{ or } f_{abt} = 0.66 f_y$$

ii) Semi-compact sections:

$$f_{abc} \text{ or } f_{abt} = 0.60 f_y$$

b) *Laterally unsupported beams subjected to major axis bending*:

$$f_{abc} = 0.60\, M_d / Z_{ec}$$

$$f_{abt} = 0.60\, M_d / Z_{et}$$

c) *Plates and solid rectangles bending about minor axis*:

$$f_{abc} = f_{abt} = 0.75 f_y$$

where

Z_{ec}, Z_{et} = elastic section modulus for the cross-section with respect to extreme compression and tension fibres, respectively;

f_y = yield stress of the material; and

M_d = design bending strength of a laterally unsupported beam bent about major axis, calculated in accordance with **14.2.2**.

17.4.2 *Shear Stress in Bending Members*

The actual shear stress, τ_b at working load, V_s of a bending member shall be less than or equal to the permissible shear stress, τ_{ab} given below:

Actual shear stress, $\tau_b = V_s / A_v$

The permissible shear stress is given by:

a) When subjected to pure shear:

$$\tau_{ab} = 0.40 f_y$$

b) When subjected to shear buckling (*see* **14.4.2.1**):

$$\tau_{ab} = 0.70\, V_n / A_v$$

where

V_n = deesign shear strength as given in **14.4.2.2** (a), and

A_v = shear area of the cross-section as given in **14.4.1**.

17.4.3 *Plate Girder*

Provisions of **14.3**, **14.4**, **14.5**, **14.6** and **14.7** shall apply, for the design of plate girder, except that the allowable stresses shall conform to **17.4.1** and **17.4.2.**

17.4.4 *Box Girder*

In design of box girder the provisions of **14.8** shall apply, except that the allowable bending stresses shall conform to **17.4.1**.

17.5 Combined Stresses

17.5.1 *Combined Bending and Shear*

Reduction in allowable moment need not be considered under combined bending and shear.

17.5.2 *Combined Bending and Axial Force*

Members subjected to combined axial compression and bending shall be so proportioned to satisfy the following requirements:

a) *Member stability requirement*:

$$\frac{f_c}{f_{acy}} + 0.6\, K_y \frac{C_{my} f_{bcy}}{f_{abcy}} + K_{LT} \frac{f_{bcz}}{f_{abcz}} \le 1.0;$$

$$\frac{f_c}{f_{acz}} + 0.6\, K_y \frac{C_{my} f_{bcy}}{f_{abcy}} + K_z \frac{C_{mz} f_{bcz}}{f_{abcz}} \le 1.0$$

where

C_{my}, C_{mz} = equivalent uniform moment factor as per Table 18,

f_c = applied axial compressive stress under service load,

f_{bcy}, f_{bcz} = applied compressive stresses due to bending about the major (y) and minor (z) axis of the member, respectively,

f_{acy}, f_{acz} = allowable axial compressive stress as governed by buckling about minor (y) and major (z) axis, respectively,

f_{abcy}, f_{abcz} = allowable bending compressive stresses due to bending about minor (y) and major (z) axes of the cross-section (*see* **17.4**),

K_y = $1 + (\lambda_y - 0.2) n_y \le 1 + 0.8\, n_y$,

K_z = $1 + (\lambda_z - 0.2) n_z \le 1 + 0.8\, n_z$,

$$K_{LT} = 1 - \frac{0.1 \lambda_{LT} n_y}{(C_{mLT} - 0.25)} \ge 1 - \frac{0.1 n_y}{(C_{mLT} - 0.25)},$$

where

n_y, n_z = ratio of actual applied axial stress to the allowable axial stress for buckling about the y and z axis, respectively,

C_{mLT} = equivalent uniform moment factor; and

λ_{LT} = non-dimensional slenderness ratio (*see* **14.2.2**).

b) *Member strength requirement*:

At a support the values f_{abcy} and f_{abcz} shall be calculated using laterally supported member and shall satisfy:

$$\frac{f_c}{0.6 f_y} + \frac{f_{bcy}}{f_{abcy}} + \frac{f_{bcz}}{f_{abcz}} \leq 1.0$$

17.5.3 *Combined Bending and Axial Tension*

Members subjected to both axial tension and bending shall be proportioned so that the following condition is satisfied:

$$\frac{f_t}{f_{at}} + \frac{f_{bty}}{f_{abty}} + \frac{f_{btz}}{f_{abtz}} \leq 1.0$$

where

f_{abty}, f_{abtz} = permissible tensile stresses under bending about minor (y) and major (z) axis when bending alone is acting, as given in **17.4.1**.

17.5.4 *Combined Bearing, Bending and Shear Stresses*

Where a bearing stress is combined with tensile or compressive stress, bending and shear stresses under the most unfavourable conditions of loading, the equivalent stress, f_e obtained from the following formula, shall not exceed $0.9 f_y$

$$f_e = \sqrt{f_b^2 + f_p^2 + f_b f_p + 3\tau_b^2}$$

where

τ_b = actual shear stress,

f_t = actual tensile stress,

f_b = actual bending stress,

f_y = yield stress, and

f_p = actual bearing stress.

The value of permissible bending stresses f_{bcy} and f_{bcz} to be used in the above formula shall each be lesser of the values of the maximum allowable stresses f_{abc} and f_{abt} in bending about appropriate axis.

17.6 Connections

17.6.1 All design provisions of Section 6(k), except for the actual and permissible stress calculations, shall apply.

17.6.2 *Actual Stresses in Fasteners*

17.6.2.1 Actual stress in bolt in shear, f_{sb} should be less than or equal to permissible stress of the bolt, f_{asb} as given below:

The actual stress in bolt in shear, $f_{sb} = V_{sb} / A_{sb}$

The permissible stress in bolt in shear, $f_{asb} = 0.60\ V_{nsb} / A_{sb}$

where

V_{sb} = actual shear force under working (service) load,

V_{nsb} = nominal shear capacity of the bolt as given in **16.3.3**, and

A_{sb} = nominal plain shank area of the bolt.

17.6.2.2 Actual stress of bolt in bearing on any plate, f_{pb} should be less than or equal to the permissible bearing stress of the bolt/plate, f_{apb} as given below:

Actual stress of bolt in bearing on any plate, $f_{pb} = V_{sb} / A_{pb}$

The permissible bearing stress of the bolt/plate, $f_{apb} = 0.60\ V_{npb} / A_{pb}$

where

V_{npb} = nominal bearing capacity of a bolt on any plate as given in **16.3.4**, and

A_{pb} = nominal bearing area of the bolt on any plate.

17.6.2.3 Actual tensile stress of the bolt, f_{tb} should be less than or equal to permissible tensile stress of the bolt, f_{atb} as given below:

Actual tensile stress of the bolt, $f_{tb} = T_s / A_{sb}$

The permissible tensile stress of the bolt, $f_{atb} = 0.60\ T_{nb} / A_{sb}$

where

T_s = tension in bolt under working (service) load,

T_{nb} = design tensile capacity of a bolt as given in **16.3.5**, and

A_{sb} = nominal plain shank area of the bolt.

17.6.2.4 Actual compressive or tensile or shear stress of a weld, f_w should be less than or equal to permissible stress of the weld, f_{aw} as given below:

The permissible stress of the weld, $f_{aw} = 0.6 f_{wn}$

where

f_{wn} = nominal shear capacity of the weld as calculated in **16.5.7.1.1**.

17.6.2.5 If the bolt is subjected to combined shear and tension, the actual shear and axial stresses calculated in accordance with **17.6.2.1** and **17.6.2.3** do not exceed

the respective permissible stresses f_{asb} and f_{atb} and the expression given below should satisfy:

$$\left[\frac{f_{sb}}{f_{asb}}\right]^2 + \left[\frac{f_{tb}}{f_{atb}}\right]^2 \leq 1.0$$

where

f_{sb}, f_{tb} = actual shear and tensile stresses, respectively; and

f_{asb}, f_{atb} = permissible shear and tensile stresses respectively.

17.6.3 *Stresses in Welds*

17.6.3.1 Actual stresses in the throat area of fillet welds shall be less than or equal to permissible stresses, f_{aw}, as given below:

$$f_{aw} = 0.4 f_y$$

17.6.3.2 Actual stresses in the butt welds shall be less than the permissible stress as governed by the parent metal welded together.

SECTION 6(n) DESIGN AND DETAILING FOR EARTHQUAKE LOADS

18 DESIGN AND DETAILING FOR EARTHQUAKE LOADS

18.1 General

Steel frames shall be so designed and detailed as to give them adequate strength, stability and ductility to resist severe earthquakes in all zones classified in **5** of Part 6 'Structural Design, Section 1 Loads, Forces and Effects' of the Code without collapse. Ductility requirements in **18.4** to **18.11** and **18.13** need not be satisfied in case of non-ductile frames as defined in **18.12**. Frames, which form a part of the gravity load resisting system but are not intended to resist the lateral earthquake loads, need not satisfy the requirements of this section, provided they can accommodate the resulting deformation without premature failure.

18.2 Load and Load Combinations

18.2.1 Earthquake loads shall be calculated as per **5** of Part 6 'Structural Design, Section 1 Loads, Forces and Effects' of the Code, except that the reduction factors recommended in **18.3** may be used.

18.2.2 In the limit state design of frames resisting earthquake loads, the load combinations shall conform to Table 4.

18.2.3 In addition the following load combination shall be considered as required in **18.5.1.1**, **18.7.3.1** and **18.11.2.2**:

a) 1.2 Dead Load (DL)+ 0.5 Imposed Load (IL) ± 2.5 Earthquake Load (EL); and

b) 0.9 Dead Load (DL) ± 2.5 Earthquake Load (EL).

NOTE — The above combinations need to be considered for only the design axial forces of members, ignoring simultaneous bending moments.

18.3 Response Reduction Factor

For structures designed and detailed as per the provision of this section, the response reduction factors specified in Table 23 may be used in conjunction with the provision in **5** of Part 6 'Structural Design, Section 1 Loads, Forces and Effects' of the Code for calculating the design earthquake forces.

Table 23 Response Reduction Factor, *R*, for Building System

(*Clause* 18.3)

Sl No. (1)	Lateral Load Resisting System (2)	*R* (3)
i)	Braced frame systems:	
	a) Ordinary concentrically braced frame (OCBF)	4.0
	b) Special concentrically braced frame (SCBF)	4.5
	c) Ordinary eccentrically braced frame (OEBF)	4.5
	d) Special eccentrically braced frame (SEBF)	5.0
ii)	Moment frame system:	
	a) Ordinary moment resisting frame (OMRF)	4.0
	b) Special moment resisting frame (SMRF)	5.0
iii)	Non-ductile frames	1.5

The braced and moment resisting frames can be designed as non-ductile frames, if their overall height to overall width ratio does not exceed 1.0, such as in industrial buildings. Such frames need not meet the ductility requirements of other types of frames as specified in **18.4** to **18.11** and **18.13**.

18.4 Connections, Joints and Fasteners

18.4.1 All bolts used in critical zones of frames designed to resist earthquake loads shall be fully tensioned High Strength Friction Grip (HSFG) bolts or turned and fitted bolts. Critical zones of frames are zones of plastic hinges of moment resisting frames and beam to column as well as bracing end connections of braced frames. The plastic hinge zones shall be taken as a distance equal to 2 times the depth of the member from the section of maximum bending moment.

18.4.2 All weld connections used in the critical zones of frames designed to resist earthquake loads shall be complete penetration butt welds, except in column splices, which shall conform to **18.5.2**.

18.4.3 Bolted joints shall be designed not to share load in combination with welds on the same faying surface.

18.5 Columns

18.5.1 *Column Strength*

When P_r/P_d is greater than 0.4, the requirements in **18.5.1.1** and **18.5.1.2** shall be met,

where

P_r = required compressive strength of the member as evaluated for load combination in Table 4, and

P_d = design strength in axial compression as obtained from **13.1.2**.

18.5.1.1 The required axial compressive and axial tensile strength, shall be determined from the load combination in **18.2.3**, without considering the simultaneous moments as obtained from the analysis.

18.5.1.2 The required axial strength determined in **18.5.1.1** need not exceed the maximum load transferred to the column considering 1.2 times the design strength of the connecting beam or brace element, or the resistance of the foundation to uplift.

18.5.2 *Splices*

18.5.2.1 A partial-joint penetration groove weld may be provided in axially loaded member splice, such that the design strength of the joints shall be at least equal to 200 percent of the required strength.

18.5.2.2 The minimum required strength for each flange splice shall be 1.2 times $f_y A_f$ as shown in Fig. 20, where A_f is the smaller of the area of each flange in the connected columns, and 1.2 times $f_y A_w$ as minimum required strength in cases where web splices are provided.

18.5.2.3 The bolted column splice shall meet the requirements of **18.4 and 18.5.1**.

18.6 Storey Drift

The storey drift limits shall conform to **5** of Part 6 'Structural Design, Section 1 Loads, Forces and Effects' of the Code. The deformation compatibility of members not designed to resist seismic lateral load shall also conform to **5** of Part 6 'Structural Design, Section 1 Loads, Forces and Effects' of the Code.

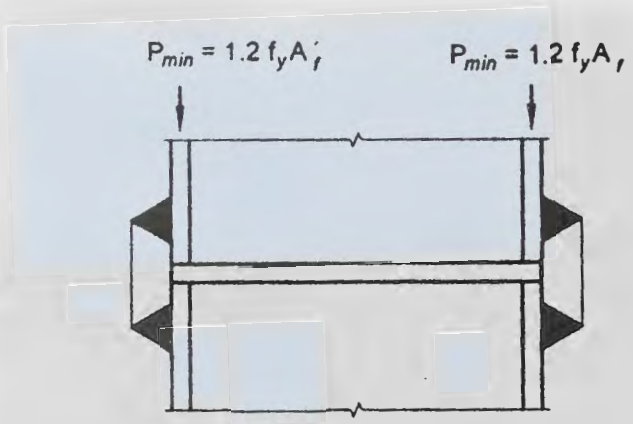

FIG. 20 PARTIAL PENETRATION GROOVE WELD IN COLUMN SPLICE

18.7 Ordinary Concentrically Braced Frames (OCBF)

18.7.1 Ordinary concentrically braced frames (OCBF) should be shown to withstand inelastic deformation corresponding to a joint rotation of at least 0.02 radians without degradation in strength and stiffness below the full yield value. Ordinary concentrically braced frames meeting the requirements of this section shall be deemed to satisfy the required inelastic deformation.

18.7.1.1 Ordinary concentrically braced frames shall not be used in seismic zones IV and V and for buildings with importance factor greater than unity (I >1.0) in Seismic Zone III.

18.7.1.2 The provision in this Section apply for diagonal and X-bracing only. Specialist literature may be consulted for V and inverted V-type bracing. K-bracing shall not be permitted in systems to resist earthquake.

18.7.2 *Bracing Members*

18.7.2.1 The slenderness of bracing members, columns and beams shall not exceed 120.

18.7.2.2 The required compressive strength of bracing member shall not exceed 0.8 times P_d, where P_d is the design strength in axial compression (*see* **13.1.2**)

18.7.2.3 Along any line of bracing, braces at all levels shall be provided such that for lateral loading in either direction, the tension braces will have to resist between 30 and 70 percent of the total floor shear at that level.

18.7.2.4 Bracing cross-section can be plastic, compact or semi-compact, but not slender, as defined in **9.7.2**.

18.7.2.5 For all built-up braces, the spacing of tack fasteners shall be such that the unfavourable slenderness ratio of individual element, between such fasteners, shall not exceed 0.4 times the governing slenderness ratio of the brace itself. Bolted connections shall be avoided within the middle one-fourth of the clear brace length (0.25 times the length in the middle) in such built-up braces.

18.7.2.6 The bracing members shall be designed so that gross area yielding (*see* **12.2**) and not the net area rupture (*see* **12.3**) would govern the design tensile strength.

18.7.3 *Bracing Connections*

18.7.3.1 End connections in bracings shall be designed to withstand the minimum of the following:

a) A tensile force in the bracing equal to $1.2 f_y A_g$;

b) Force in the brace due to load combinations in **18.2.3**; and

c) Maximum force that is transferred to the brace by the system, based on analysis.

18.7.3.2 The connection should be checked for tension rupture and block shear under the load determined in **18.7.3.1**.

18.7.3.3 The connection shall be designed to withstand a moment of 1.2 times the full plastic moment of the braced section about the buckling axis.

18.7.3.4 Gusset plates shall be checked for buckling out of their plane.

18.8 Special Concentrically Braced Frames (SCBF)

18.8.1 Special concentrically braced frames (SCBF) should be shown to withstand inelastic deformation corresponding to a joint rotation of at least 0.04 radians without degradation in strength and stiffness below the full yield value. Special concentrically braced frames meeting the requirements of this Section shall be deemed to satisfy the required inelastic deformation.

18.8.1.1 Special concentrically braced frames (SCBF) may be used in any seismic zone (*see* **5** of Part 6 'Structural Design, Section 1 Loads, Forces and Effects' of the Code) and for any building (importance-factor value).

18.8.1.2 The provision in this Section apply for diagonal and X-bracing only. Specialist literature may be consulted for V and inverted-V type bracing. K bracing shall not be permitted in system to resist earthquake.

18.8.2 *Bracing Members*

18.8.2.1 Bracing members shall be made of E250B steel of the accepted standard [6-6(6)] or of steel having Charpy V-notch energy not less than 27 J at the minimum design temperature.

18.8.2.2 The slenderness of bracing members shall not exceed 160 (except for hanger elements, which support only gravity load).

18.8.2.3 The required compressive strength of bracing member shall not exceed the design strength in axial compression P_d (*see* **13.1.2**).

18.8.2.4 Along any line of bracing, braces shall be provided such that for lateral loading in either direction, the tension braces will resist between 30 and 70 percent of the load.

18.8.2.5 Braced cross-section shall be plastic as defined in **9.7.2**.

18.8.2.6 In built-up braces, the spacing of tack connections shall be such that the slenderness ratio of individual element between such connections shall not exceed 0.4 times the governing slenderness ratio of the brace itself. Bolted connection shall be avoided within the middle one-fourth of the clear brace length (0.25 times the length in the middle).

18.8.2.7 The bracing members shall be designed so that gross area yielding (*see* **12.2**) and not the net area rupture (*see* **12.3**) would govern the design tensile strength.

18.8.3 *Bracing Connections*

18.8.3.1 Bracing end connections shall be designed to withstand the minimum of the following:

a) A tensile force in the bracing equal to $1.1 f_y A_g$; and

b) Maximum force that can be transferred to the brace by the system.

18.8.3.2 The connection should be checked for tension rupture and block shear under the load determined in **18.8.3.1**.

18.8.3.3 The connection shall be designed to withstand a moment of 1.2 times the full plastic moment of the braced section about the critical buckling axis.

18.8.3.4 Gusset plates shall be checked for buckling out of their plane.

18.8.4 *Column*

18.8.4.1 The column sections used in special concentrically braced frames (SCBF) shall be plastic as defined in **9.7.2**.

18.8.4.2 Splices shall be located within the middle one-third of the column clear height. Splices shall be designed for the forces that can be transferred to it. In addition, splices in columns shall be designed to develop at least the nominal shear strength of the smaller connected member and 50 percent of the nominal flexural strength of the smaller connected section.

18.9 Eccentrically Braced Frames (EBF)

Eccentrically braced frames (EBF) shall be designed in accordance with specialist literature.

18.10 Ordinary Moment Resisting Frames (OMRF)

18.10.1 Ordinary moment resisting frames (OMRF) should be shown to withstand inelastic deformation corresponding to a joint rotation of 0.02 radians without degradation in strength and stiffness below the full yield value (M_p). Ordinary moment resisting frames meeting the requirements of this section shall be deemed to satisfy the required inelastic deformation.

18.10.1.1 Ordinary moment resisting frames (OMRF)

shall not be used in Seismic Zones IV and V and for buildings with importance factor greater than unity ($I > 1.0$) in Seismic Zone III.

18.10.2 *Beam-to-Column Joints and Connections*

Connections are permitted to be rigid or semi-rigid moment connections and should satisfy the criteria in **18.10.2.1** to **18.10.2.5**.

18.10.2.1 Rigid moment connections should be designed to withstand a moment of at least 1.2 times of either the full plastic moment of the connected beam or the maximum moment that can be delivered by the beam to the joint due to the induced weakness at the ends of the beam, whichever is less.

18.10.2.2 Semi-rigid connections should be designed to withstand either a moment of at least 0.5 times the full plastic moment of the connected beam or the maximum moment that can be delivered by the system, whichever is less. The design moment shall be achieved within a rotation of 0.01 radians. The information given in Annex E may be used for checking.

18.10.2.3 The stiffness and strength of semi-rigid connections shall be accounted for in the design and the overall stability of the frame shall be ensured.

18.10.2.4 The rigid and semi-rigid connections should be designed to withstand a shear resulting from the load combination 1.2DL + 0.5IL plus the shear corresponding to the design moment defined in **18.10.2.1** and **18.10.2.2**, respectively.

18.10.2.5 In rigid fully welded connections, continuity plates [for tension stiffeners, *see* **14.7.1.1**(f)] of thickness equal to or greater than the thickness of the beam flange shall be provided and welded to the column flanges and web.

18.11 Special Moment Resisting Frames (SMRF)

18.11.1 Special moment resisting frames (SMRF) shall be made of E250B steel of the accepted standard [6-6(6)] or of steel having Charpy V-notch energy, E > 27J and should be shown to withstand inelastic deformation corresponding to a joint rotation of 0.04 radian without degradation in strength and stiffness below the full yield value (M_p). Special moment resisting frames meeting the requirements of this Section shall be deemed to satisfy the required inelastic deformation.

18.11.1.1 Special moment resisting frames (SMRF) may be used in any seismic zone (*see* 5 of Part 6 'Structural Design, Section 1 Loads, Forces and Effects' of the Code) and for any buildings (importance-factor values).

18.11.2 *Beam-to-column Joints and Connections*

18.11.2.1 All beam-to-column connections shall be rigid (*see* Annex E) and designed to withstand a moment of at least 1.2 times the full plastic moment of the connected beam. When a reduced beam section is used in the plastic hinge zone, its minimum flexural strength shall be at least equal to 0.8 times the full plastic moment of the unreduced section.

18.11.2.2 The connection shall be designed to withstand a shear resulting from the load combination 1.2DL + 0.5IL plus the shear resulting from the application of $1.2M_p$ in the same direction, at each end of the beam (causing double curvature bending). The shear strength need not exceed the required value corresponding to the load combination in **18.2.3**.

18.11.2.3 In column strong axis connections (beam and column web in the same plane), the panel zone shall be checked for shear buckling in accordance with **14.4.2** at the design shear defined in **18.11.2.2**. Column web doubler plates or diagonal stiffeners may be used to strengthen the web against shear buckling.

18.11.2.4 The individual thickness of the column webs and doubler plates, shall satisfy the following:

$$t > (d_p + b_p) / 90$$

where

t = thickness of column web or doubler plate,

d_p = panel-zone depth between continuity plates (*see* Fig. 21), and

b_p = panel-zone width between column flanges.

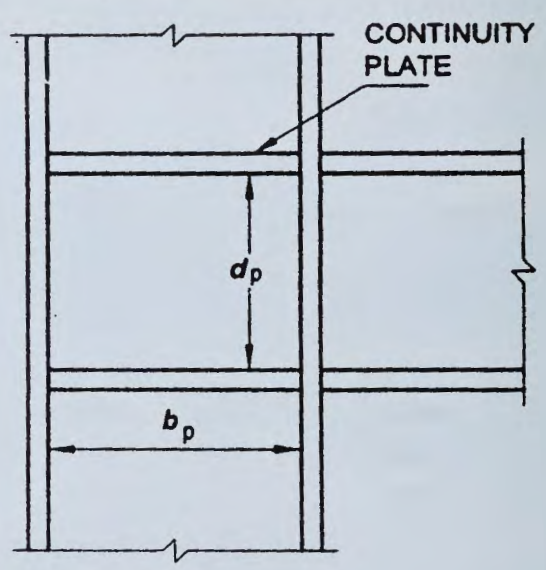

FIG. 21 CONTINUITY PLATES

18.11.2.5 Continuity plates (tension stiffener) (*see* **14.7**) shall be provided in all strong axis welded connections except in end plate connection.

18.11.3 *Beam and Column Limitation*

18.11.3.1 Beam and column sections shall be either plastic or compact as defined in **9.7.2**. At potential plastic hinge locations, they shall necessarily be plastic.

18.11.3.2 The section selected for beams and columns

shall satisfy the following relation:

$$\frac{\sum M_{pc}}{\sum M_{pb}} \geq 1.2$$

where

ΣM_{pc} = sum of the moment capacity in the column above and below the beam centreline; and

ΣM_{pb} = sum of the moment capacity in the beams at the intersection of the beam and column centrelines.

In tall buildings, higher mode effects shall be accounted for in accordance with specialist literature.

18.11.3.3 Lateral support to the column in a direction perpendicular to the web of the beam shall be provided at both top and bottom beam flange levels so as to resist at least 2 percent of the beam flange strength, except for the case described in **18.11.3.4**.

18.11.3.4 A plane frame designed as non-sway in the direction perpendicular to its plane, shall be checked for buckling, under the load combination as specified in **18.5.1.1**.

18.12 Non-Ductile Braced and Moment Resisting Frames

Frames which do not meet the ductility requirements of the **18.4** to **18.11** and **18.13** and designed as per the response reduction factor for non-ductile frames specified in Table 23 shall be classified as non-ductile frames. These frames shall have height to span ratio not exceeding 1.0, such as in industrial buildings.

18.13 Column Base Connections

18.13.1 Fixed column bases and their anchor bolts should be designed to withstand a moment of 1.2 times the full plastic moment capacity of the column section. The anchor bolts shall be designed to withstand the combined action of shear and tension under the above moment and shear as well as prying action, if any.

18.13.2 Both fixed and hinged column base connections shall be designed to withstand higher value of (a) the full shear under any load case, and (b) 1.2 times the shear capacity of the column section.

SECTION 6(p) FATIGUE

19 FATIGUE

19.1 General

Structure and structural elements subject to loading that could lead to fatigue failure shall be designed against fatigue as given in this section. This shall however not cover the following:

a) Corrosion fatigue,
b) Low cycle (high stress) fatigue,
c) Thermal fatigue,
d) Stress corrosion cracking,
e) Effects of high temperature (> 150°C), and
f) Effects of low temperature (< brittle transition temperature).

19.1.1 For the purpose of design against fatigue, different details (of members and connections) are classified under different fatigue class. The design stress range corresponding to various number of cycles, are given for each fatigue class. The requirements of this Section shall be satisfied with, at each critical location of the structure subjected to cyclic loading, considering relevant number of cycles and magnitudes of stress range expected to be experienced during the life of the structure.

19.2 Design

19.2.1 *Reference Design Condition*

The standard S-N curves for each detail category are given for the following conditions:

a) Detail is located in a redundant load path, wherein local failure at that detail alone will not lead to overall collapse of the structure.
b) Nominal stress history at the local point in the detail is estimated/evaluated by a conventional method without taking into account the local stress concentration effects due to the detail.
c) Load cycles are not highly irregular.
d) Details are accessible for and subject to regular inspection.
e) Structure is exposed to only mildly corrosive environment as in normal atmospheric condition and suitably protected against corrosion (pit depth <1 mm).
f) Structure is not subjected to temperature exceeding 150 °C.
g) Transverse fillet or butt weld connects plates of thickness not greater than 25 mm.

19.2.1.1 *Thickness correction factor*

The values obtained from the standard S-N curve shall be modified by a capacity reduction factor μ_r, when plates greater than 25 mm in thickness are joined together by transverse fillet or butt welding, given by:

$$\mu_r = (25/t_p)^{0.25} \leq 1.0$$

where

t_p = actual thickness of the thicker plate being joined, in mm.

No thickness correction is necessary when full

penetration butt weld reinforcements are machined flush and proved free of defect through non-destructive testing.

19.2.1.2 *Necessity for fatigue assessment*

a) Fatigue assessment is not normally required for building structures except as follows:
   1) Members supporting lifting or rolling loads,
   2) Member subjected to repeated stress cycles from vibrating machinery,
   3) Members subjected to wind induced oscillations of a large number of cycles in life, and
   4) Members subjected to crowd induced oscillations of a large number of cycles in life.

b) No fatigue assessment is necessary, if the following conditions are satisfied.
   1) The highest normal stress range $f_{f\,max}$ satisfies:

$$f_{fmax} \leq 27\ \mu_r/\gamma_{mft}$$

   2) The highest shear stress range τ_{fmax} satisfies:

$$\tau_{fmax} \leq 67\ \mu_r/\gamma_{mft}$$

   3) The total number of actual stress cycles N_{SC}, satisfies:

$$N_{SC} \leq 5\times10^6\left(\frac{27\mu_r}{\gamma_{mft} f_{feq}}\right)^3$$

where

f_{feq} = equivalent constant amplitude stress range, in MPa, given by:

$$f_{feq} = \left[\frac{\sum_{i=1}^{r_5} n_i f_i^3 + \sum_{j=r_5}^{r} n_j f_j^5}{n}\right]^{1/3}$$

where

$$n = \sum_{i=1}^{r} n_i$$

f_i, f_j = stress ranges falling above and below the f_{fn}, the stress range corresponding to the detail at 5×10^6 number of life cycles.

r_5 = summation upper limit of all the normal stress ranges (f_i) having magnitude lesser than ($\mu_r f_{fn} \gamma_{mft}$) for that detail and the lower limit of all the normal stress ranges (f_j) having magnitude greater than ($\mu_r f_{fn} \gamma_{mft}$) for that detail.

19.2.2 *Design Spectrum*

19.2.2.1 *Stress evaluation*

Design stress shall be determined by elastic analysis of the structure to obtain stress resultants and the local stresses may be obtained by a conventional stress analysis method. The normal and shear stresses shall be determined considering all design actions on the members, but excluding stress concentration due to the geometry of the detail. The stress concentration effect is accounted for in detail category classification (*see* Table 26). The stress concentration, however, not characteristic of the detail shall be accounted for separately in the stress calculation.

In the fatigue design of trusses made of members with open sections, in which the end connections are not pinned, the stresses due to secondary bending moments shall be taken into account, unless the slenderness ratio (*KL/r*), of the member is greater than 40.

In the determination of stress range at the end connections between hollow sections, the effect of connection stiffness and eccentricities may be disregarded, provided,

a) the calculated stress range is multiplied by appropriate factor given in Table 24(a) in the case of circular hollow section connections and Table 24(b) in the case of rectangular hollow section connections.

b) the design throat thickness of fillet welds in the joints is greater than the wall thickness of the connected member.

19.2.2.2 *Design stress spectrum*

In the case of loading events producing non-uniform stress range cycle, the stress spectrum may be obtained by a rational method, such as 'rain flow counting' or an equivalent method.

Table 24(a) Multiplying Factors for Calculated Stress Range (Circular Hollow Sections)

(*Clause* 19.2.2.1)

Sl No.	Type of Connection		Chords	Verticals	Diagonals
(1)	(2)		(3)	(4)	(5)
i)	Gap connections	K type	1.5	1.0	1.3
		N type	1.5	1.8	1.4
ii)	Overlap connections	K type	1.5	1.0	1.2
		N type	1.5	1.65	1.25

Table 24(b) Multiplying Factors for Calculated Stress Range (Rectangular Hollow Sections)

(*Clause* 19.2.2.1)

Sl No.	Types of Joint		Chords	Verticals	Diagonals
(1)	(2)		(3)	(4)	(5)
i)	Gap connections	K type	1.5	1.0	1.5
		N type	1.5	2.2	1.6
ii)	Overlap connections	K type	1.5	1.0	1.3
		N type	1.5	2.0	1.4

19.2.3 *Partial Safety Factors*

19.2.3.1 *Partial safety factor for actions and their effects* (γ_{ff})

Unless and otherwise the uncertainty in the estimation of the applied actions and their effects demand a higher value, the partial safety factor for loads in the evaluation of stress range in fatigue design shall be taken as 1.0.

19.2.3.2 *Partial safety factor for fatigue strength* (γ_{mft})

Partial safety factor for strength is influenced by consequences of fatigue damage and level of inspection capabilities.

19.2.3.3 Based on consequences of fatigue failure, component details have been classified as given in the Table 25 and the corresponding partial safety factor for fatigue strength shall be used:

a) Failsafe structural component/detail is the one where local failure of one component due to fatigue crack does not result in the failure of the structure due to availability of alternate load path (redundant system).

b) Non-failsafe structural component/detail is the one where local failure of one component leads rapidly to failure of the structure due to its non-redundant nature.

Table 25 Partial Safety Factors for Fatigue Strength (γ_{mft})

(*Clause* 19.2.3.3)

Sl No.	Inspection and Access	Consequence of Failure	
		Failsafe	Non-Failsafe
(1)	(2)	(3)	(4)
i)	Periodic inspection, maintenance and accessibility to detail is good	1.00	1.25
ii)	Periodic inspection, maintenance and accessibility to detail is poor	1.15	1.35

19.3 Detail Category

Tables 26(a) to (d) indicate the classification of different details into various categories for the purpose of assessing fatigue strength. Details not classified in the table may be treated as the lowest detail category of a similar detail, unless superior fatigue strength is proved by testing and/or analysis.

Holes in members and connections subjected to fatigue loading shall not be made,

a) using punching in plates having thickness greater than 12 mm unless he holes are sub-punched and subsequently reamed to remove the affected material around the punched hole; and

b) using gas cutting unless the holes are reamed to remove the material in the heat affected zone.

19.4 Fatigue Strength

The fatigue strength of the standard detail for the normal or shear fatigue stress range, not corrected for thickness effects discussed in **19.4.1**, is given below (*see also* Fig. 22 and Fig. 23):

a) Normal stress range:

1) when $N_{SC} \leq 5 \times 10^6$

$$f_f = f_{fn}\sqrt[3]{5\times10^6 / N_{SC}}$$

2) when $5\times10^6 \leq N_{SC} \leq 10^8$

$$f_f = f_{fn}\sqrt[5]{5\times10^6 / N_{SC}}$$

b) Shear stress:

$$\tau_f = \tau_{fn}\sqrt[5]{5\times10^6 / N_{SC}}$$

where

f_f, τ_f = design normal and shear fatigue stress range of the detail, respectively, for life cycle of N_{SC}, and

f_{fn}, τ_{fn} = normal and shear fatigue strength of the detail for 5×10^6 cycles, for the detail category (*see* Table 26).

19.5 Fatigue Assessment

19.5.1 The design fatigue strength for N_{SC} life cycles (f_{fd}, t_{fd}) may be obtained from the standard fatigue strength for N_{SC} cycles by multiplying with correction factor, m_r, for thickness, as mentioned in **19.2.1** and dividing by partial safety factor given in Table 25.

19.5.2 *Stress Limitations*

19.5.2.1 The maximum (absolute) value of the normal and shear stresses shall never exceed the elastic limit (f_y, τ_y) for the material under cyclic loading.

19.5.2.2 The maximum stress range shall not exceed $1.5 f_y$ for normal stresses and $1.5 f_y \sqrt{3}$ for the shear stresses under any circumstance.

19.5.2.3 *Constant stress range*

The actual normal and shear stress range f and t at a point of the structure subjected to N_{SC} cycles in life shall satisfy:

$$f \leq f_{fd} = \mu_r f_f / \gamma_{mft}$$

$$\tau \leq \tau_{fd} = \mu_r \tau_f / \gamma_{mft}$$

where

μ_r = correction factor (*see* **19.2.1**),

γ_{mf} = partial safety factor against fatigue failure, given in Table 25, and

f_f, τ_f = normal and shear fatigue strength ranges for the actual life cycle, N_{SC}, obtained from **19.4**.

19.5.2.4 *Variable stress range*

Fatigue assessment at any point in a structure, wherein variable stress ranges f_i or τ_i for n_i number of cycles (i =1 to r) are encountered, shall satisfy the following:

a) For normal stress (f):

$$\frac{\sum_{i=1}^{r_5} n_i f_i^3}{5\times10^6\left(\mu_r f_{fn}/\gamma_{mft}\right)^3}+\frac{\sum_{j=r_5}^{r} n_j f_j^5}{5\times10^6\left(\mu_r f_{fn}/\gamma_{mft}\right)^5}\le 1.0$$

b) For shear stresses (t):

$$\sum_{i=1}^{r_5} n_i \tau_i^5 \le 5\times10^6\left(\mu\tau_{fn}/\gamma_{mft}\right)^5$$

Where r_5 is the summation upper limit of all the normal stress ranges (f_i) having magnitude lesser than ($\mu_r f_{fn}/\gamma_{mft}$) for that detail and the lower limit of all the normal stress ranges (f_j) having magnitude greater than ($\mu_r f_{fn}/\gamma_{mft}$) for the detail. In the above summation all normal stress ranges, f_i, and shear stress ranges τ_i having magnitude less than $0.55\mu_r f_{fn}$, and $0.55\mu_r \tau_{fn}$, respectively may be disregarded.

Table 26(a) Detail Category Classification, Group 1 Non-Welded Details (f_{fn})

(*Clause* 19.3)

Sl No. (1)	Detail Category (2)	Constructional Details: Illustration (*see* Note) (3)	Constructional Details: Description (4)
i)	118	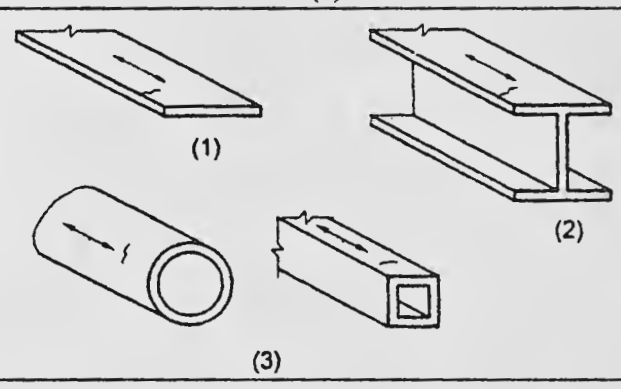	**Rolled and extruded products:** a) Plates and flats (1) b) Rolled sections (2) c) Seamless tubes (3) Sharp edges, surface and rolling flaws to be removed by grinding in the direction of applied stress
ii)	103	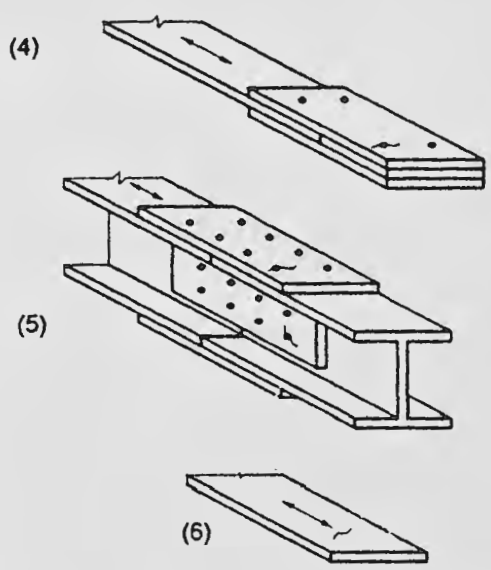	**(a) Bolted connections:** (4) and (5): Stress range calculated on the gross section and on the net section Unsupported one-sided cover plate connections shall be avoided or the effect of the eccentricity taken into account in calculating stresses **(b) Material with gas-cut or sheared edges with no draglines:** (6): All hardened material and visible signs of edge discontinuities to be removed by machining or grinding in the direction of applied stress
iii)	92		**Material with machine gas-cut edges with draglines or manual gas-cut material:** (7) Corners and visible signs of edge discontinuities to be removed by grinding in the direction of the applied stress

NOTE — The arrow indicates the location and direction of the stresses acting in the basic material for which the stress range is to be calculated on a plane normal to the arrow.

Table 26(b) Detail Category Classification, Group 2 Welded Details — Not in Hollow Sections (f_{fn})

(*Clause* 19.3)

Sl No.	Detail Category	Constructional Details	
		Illustration (*see* Note)	Description
i)	92	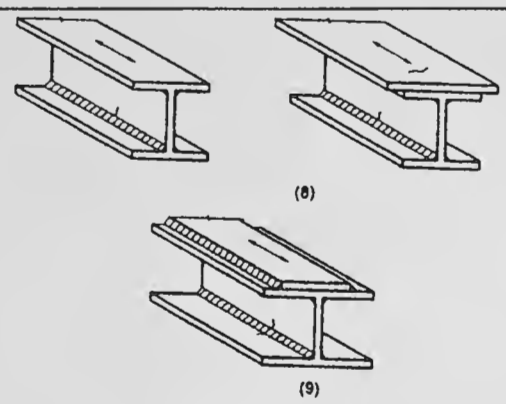	**Welded plate I-section and box girders with continuous longitudinal welds:** (8) and (9): Zones of continuous automatic longitudinal fillet or butt welds carried out from both sides and all welds not having un-repaired stop-start positions
ii)	83	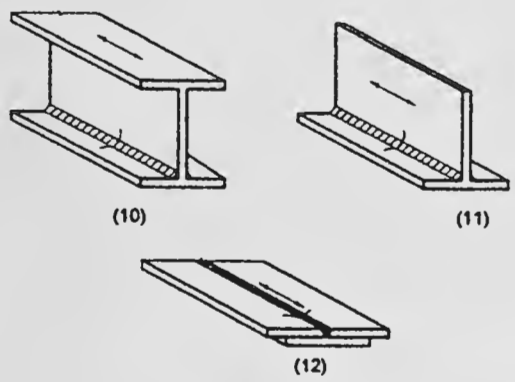	**Welded plate I-section and box girders with continuous longitudinal welds:** (10) and (11): Zones of continuous automatic butt welds made from one side only with a continuous backing bar and all welds not having un-repaired stop-start positions (12): Zones of continuous longitudinal fillet or butt welds carried out from both sides but containing stop-start positions. For continuous manual longitudinal fillet or butt welds carried out from both sides, use Detail Category 92
iii)	66		**Welded plate I-section and box girders with continuous longitudinal welds:** (13): Zones of continuous longitudinal welds carried out from one side only, with or without stop-start positions
iv)	59	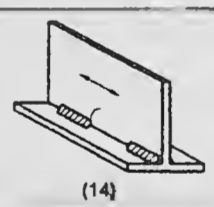	**Intermittent longitudinal welds:** (14): Zones of intermittent longitudinal welds
v)	52		**Intermittent longitudinal welds:** (15): Zones containing cope holes in longitudinally welded T-joints. Cope hole not to be filled with weld
vi)	83	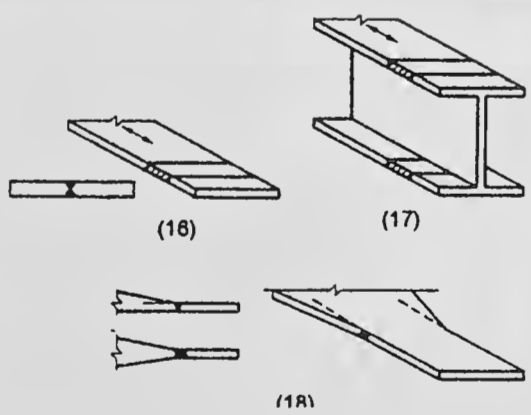	**Transverse butt welds (complete penetration):** Weld run-off tabs to be used, subsequently removed and ends of welds ground flush in the direction of stress. Welds to be made from two sides (16): Transverse splices in plates, flats and rolled sections having the weld reinforcement ground flush to plate surface. 100 percent NDT inspection, and weld surface to be free of exposed porosity in the weld metal (17): Plate girders welded as in (16) before assembly (18): Transverse splices as in (16) with reduced or tapered transition with taper ≤ 1:4

Table 26(b) — (*Continued*)

Sl No.	Detail Category	Constructional Details	
		Illustration (*see* Note)	Description
(1)	(2)	(3)	(4)
vii)	66	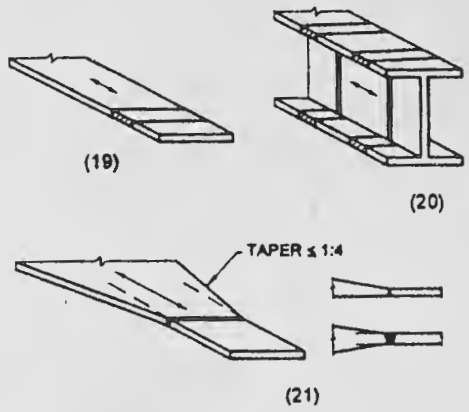	**Transverse butt welds (complete penetration):** Welds run-off tabs to be used, subsequently removed and ends of welds ground flush in the direction of stress. Welds to be made from two sides (19): Transverse splices of plates, rolled sections or plate girders (20): Transverse splice of rolled sections or welded plate girders, without cope hole. With cope hole use Detail Category 52, as in (15) (21): Transverse splices in plates or flats being tapered in width or in thickness where the taper is ≤ 1:4
viii)	59	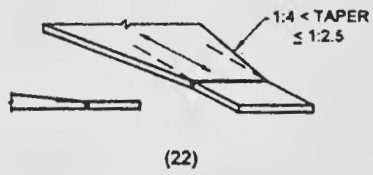	**Transverse butt welds (complete penetration):** Weld run-off tabs to be used, subsequently removed and ends of welds ground flush in the direction of stress. Welds to be made from two sides (22): Transverse splices as in (21) with taper in width or thickness >1:4 but ≤ 1:2.5
ix)	52	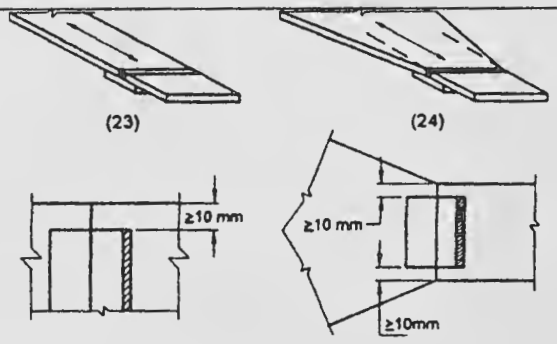	**Transverse butt welds (complete penetration):** (23): Transverse butt-welded splices made on a backing bar. The end of the fillet weld of the backing strip shall stop short by more than 10 mm from the edges of the stressed plate (24): Transverse butt welds as per (23) with taper on width or thickness <1:2.5
x)	37	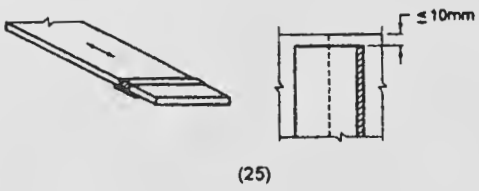	**Transverse butt welds (complete penetration):** (25): Transverse butt welds as in (23) where fillet welds end closer than 10 mm to plate edge
xi)	52	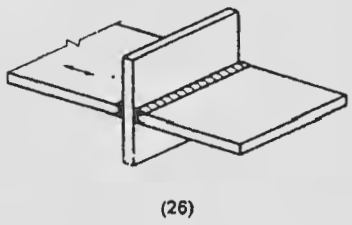	**Cruciform joints with load-carrying welds:** (26): Full penetration welds with intermediate plate NDT inspected and free of defects. Maximum misalignment of plates either side of joint to be < 0.15 times the thickness of intermediate plate
xii)	41 (27) 27 (28)	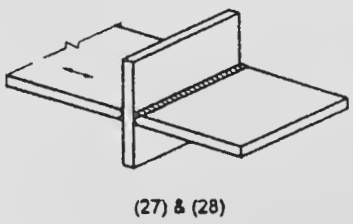	(27): Partial penetration or fillet welds with stress range calculated on plate area (28): Partial penetration or fillet welds with stress range calculated on throat area of weld

Table 26(b) — (*Concluded*)

Sl No.	Detail Category		Constructional Details			
			Illustration (*see* Note)			Description
(1)	(2)		(3)			(4)
xiii)	46			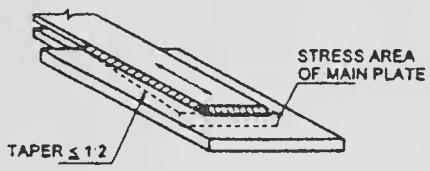 (29)		**Overlapped welded joints:** (29): Fillet welded lap joint, with welds and overlapping elements having a design capacity greater than the main plate. Stress in the main plate to be calculated on the basis of area shown in the illustration
xiv)	41	(30)		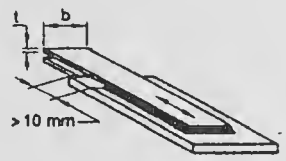 (30) & (31)		**Overlapped weld joints:** (30): Fillet welded lap joint, with welds and main plate both having a design capacity greater than the overlapping elements
xv)	33	(31)				(31): Fillet welded lap joint, with main plate and overlapping elements both having a design capacity greater than the weld
xvi)	66		(32)	(33)	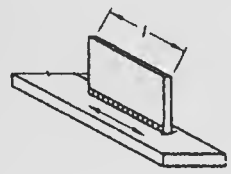 (32)	**Welded attachments (non-load carrying welds) – Longitudinal welds:** (32): Longitudinal fillet welds. Class of detail varies according to the length of the attachment weld as noted (33): Gusset welded to the edge of a plate or beam flange. Smooth transition radius (*r*), formed by machining or flame cutting plus grinding. Class of detail varies according to *r*/*b* ratio as noted
			—	$1/3 \leq r/b$		
	59		$l \leq 50$mm	—		
	52		$50 < l \leq 100$mm	$1/6 \leq r/b < 1/3$		
	37		100 mm < l	—	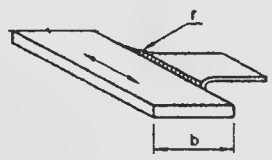 (33)	
	33		—	$r/b < 1/6$		
xvii)	59		(34)			**Welded attachments:** (34): Shear connectors on base material (failure in base material)
xviii)	59		$t \leq 12$mm		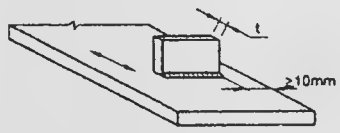 (35)	**Transverse welds:** (35): Transverse fillet welds with the end of the weld ≥10 mm from the edge of the plate (36): Vertical stiffeners welded to a beam or plate girder flange or web by continuous or intermittent welds. In the case of webs carrying combined bending and shear design actions, the fatigue strength shall be determined using the stress range of the principal stresses (37): Diaphragms of box girders welded to the flange or web by continuous or intermittent welds
	52		$t > 12$mm		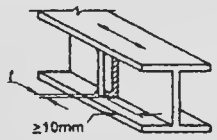 (36) 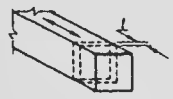 (37)	
xix)	37		t_f or t_p ≤25mm		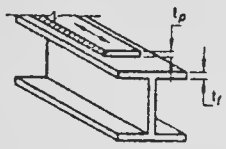 (38)	**Cover plates in beams and plate girders:** (38): End zones of single or multiple welded cover plates, with or without a weld across the end. For a reinforcing plate wider than the flange, an end weld is essential
	27		t_f or t_p >25 mm			
xx)	67		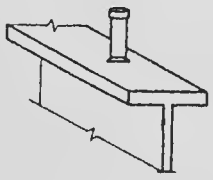 (40) 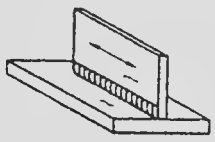 (39)			**Welds loaded in shear:** (39): Fillet welds transmitting shear. Stress range to be calculated on weld throat area (40): Stud welded shear connectors (failure in the weld) loaded in shear (the shear stress range to be calculated on the nominal section of the stud)

NOTE — The arrow indicates the location and direction of the stresses acting in the basic material for which the stress range is to be calculated on a plane normal to the arrow.

Table 26(c) Detail Category Classification, Group 3 Bolts

(*Clause* 19.3)

Sl No.	Detail Category	Constructional Details	
		Illustration (*see* Note)	Description
(1)	(2)	(3)	(4)
i)	83	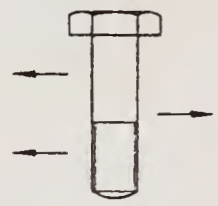 (41)	**Bolts in shear (8.8/TB Bolting category only):** (41): Shear stress range calculated on the minor diameter area of the bolt (A_c) NOTE – If the shear on the joint is insufficient to cause slip of the joint the shear in the bolt need not be considered in fatigue
ii)	27	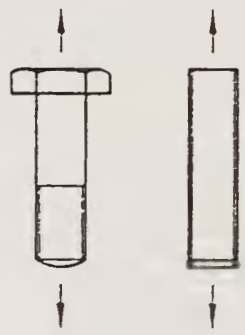 (42)	**Bolts and threaded rods in tension (tensile stress to be calculated on the tensile stress area, A_t):** (42): Additional forces due to prying effects shall be taken into account. For tensional bolts, the stress range depends on the connection geometry NOTE – In connections with tensioned bolts, the change in the force in the bolts is often less than the applied force, but this effect is dependent on the geometry of the connection. It is not normally required that any allowance for fatigue be made in calculating the required number of bolts in such connections

NOTE – The arrow indicates the location and direction of the stresses acting in the basic material for which the stress range is to be calculated on a plane normal to the arrow.

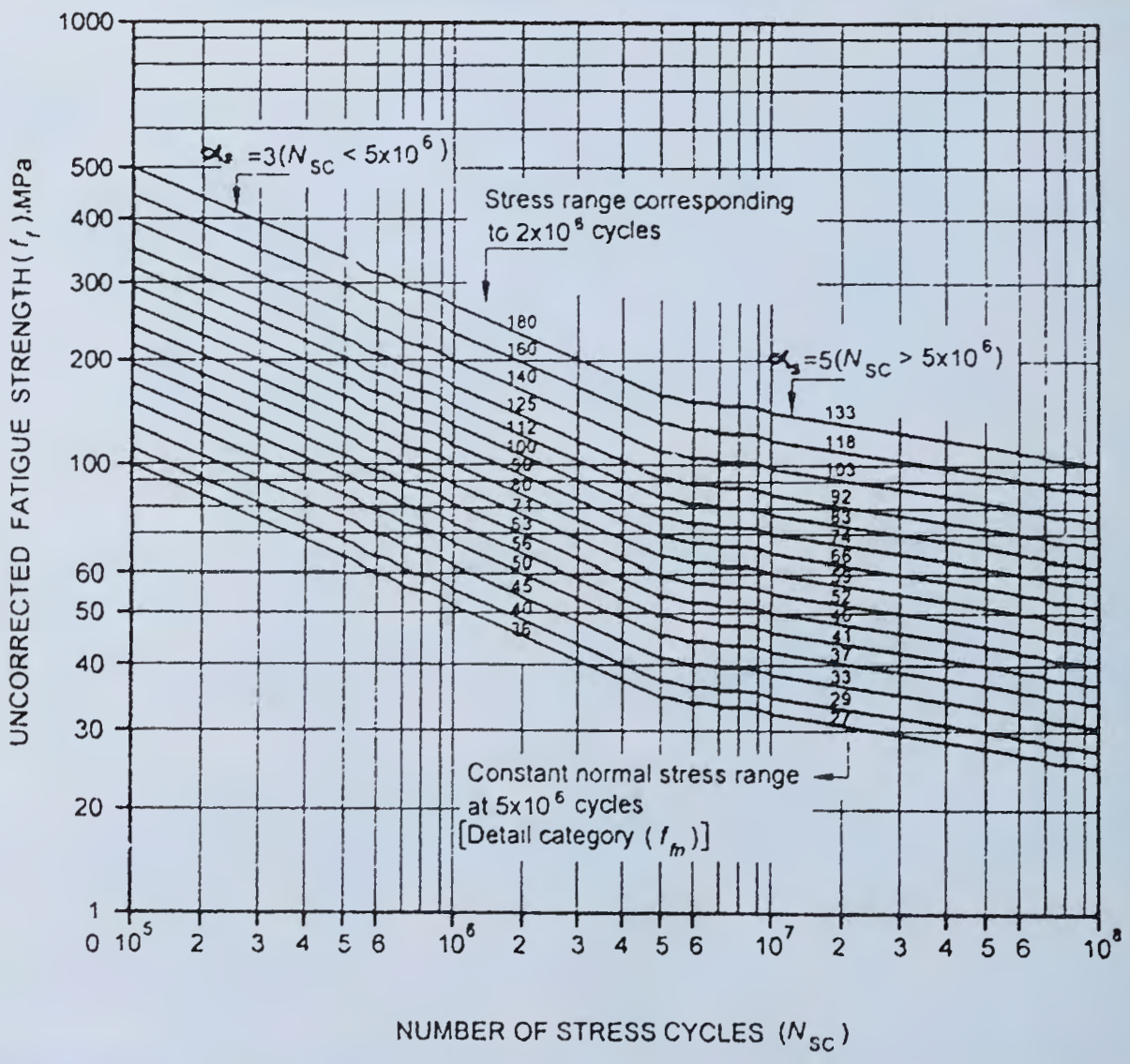

FIG. 22 *S-N* CURVE FOR NORMAL STRESS

Table 26(d) Detail Category Classification, Group 4 Welded Details – In Hollow Sections (f_{fn})

(*Clause* 19.3)

Sl No.	Detail Category	Constructional Details	
		Illustration (*see* Note)	Description
(1)	(2)	(3)	(4)
i)	103	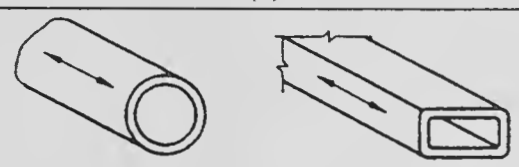 (43)	**Continuous automatic longitudinal welds:** (43): No stop-starts, or as manufactured, proven free to detachable discontinuities.
ii)	66 ($t \geq 8$ mm) 52 ($t < 8$ mm)	(44)	**Transverse butt welds:** (44): Butt-welded end-to-end connection of circular hollow sections NOTE — Height of the weld reinforcement less than 10 percent of weld with smooth transition to the plate surface. Welds made in flat position and proven free to detachable discontinuities)
iii)	52 ($t \geq 8$ mm) 41 ($t < 8$ mm)	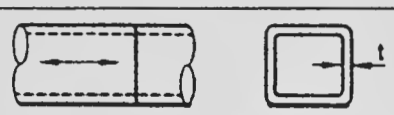 (45)	(45): Butt-welded end-to-end connection of rectangular hollow sections
iv)	41 ($t \geq 8$ mm) 37 ($t < 8$ mm)	(46)	**Butt welds to intermediate plate:** (46): Circular hollow sections, end-to-end butt-welded with an intermediate plate
v)	37 ($t \geq 8$ mm) 30 ($t < 8$ mm)	(47)	(47): Rectangular hollow sections, end-to-end butt welded with an intermediate plate
vi)	52	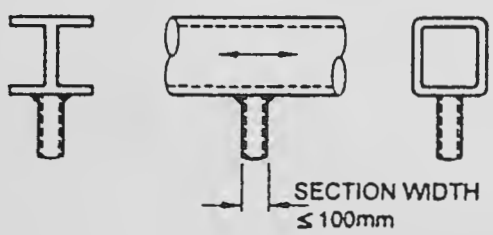 (48)	**Welded attachments (non-load-carrying):** (48): Circular or rectangular hollow section, fillet welded to another section. Section width parallel to stress direction ≤ 100 mm
vii)	33 ($t < 8$ mm) 29 ($t < 8$ mm)	(49)	**Fillet welds to intermediate plate** (49): Circular hollow sections, end-to-end fillet welded with an intermediate plate
viii)	29 ($t \geq 8$ mm) 27 ($t < 8$ mm)	(50)	(50): Rectangular hollow sections, end-to-end fillet welded with an intermediate plate

NOTE □ The arrow indicates the location and direction of the stresses acting in the basic material for which the stress range is to be calculated on a plane normal to the arrow.

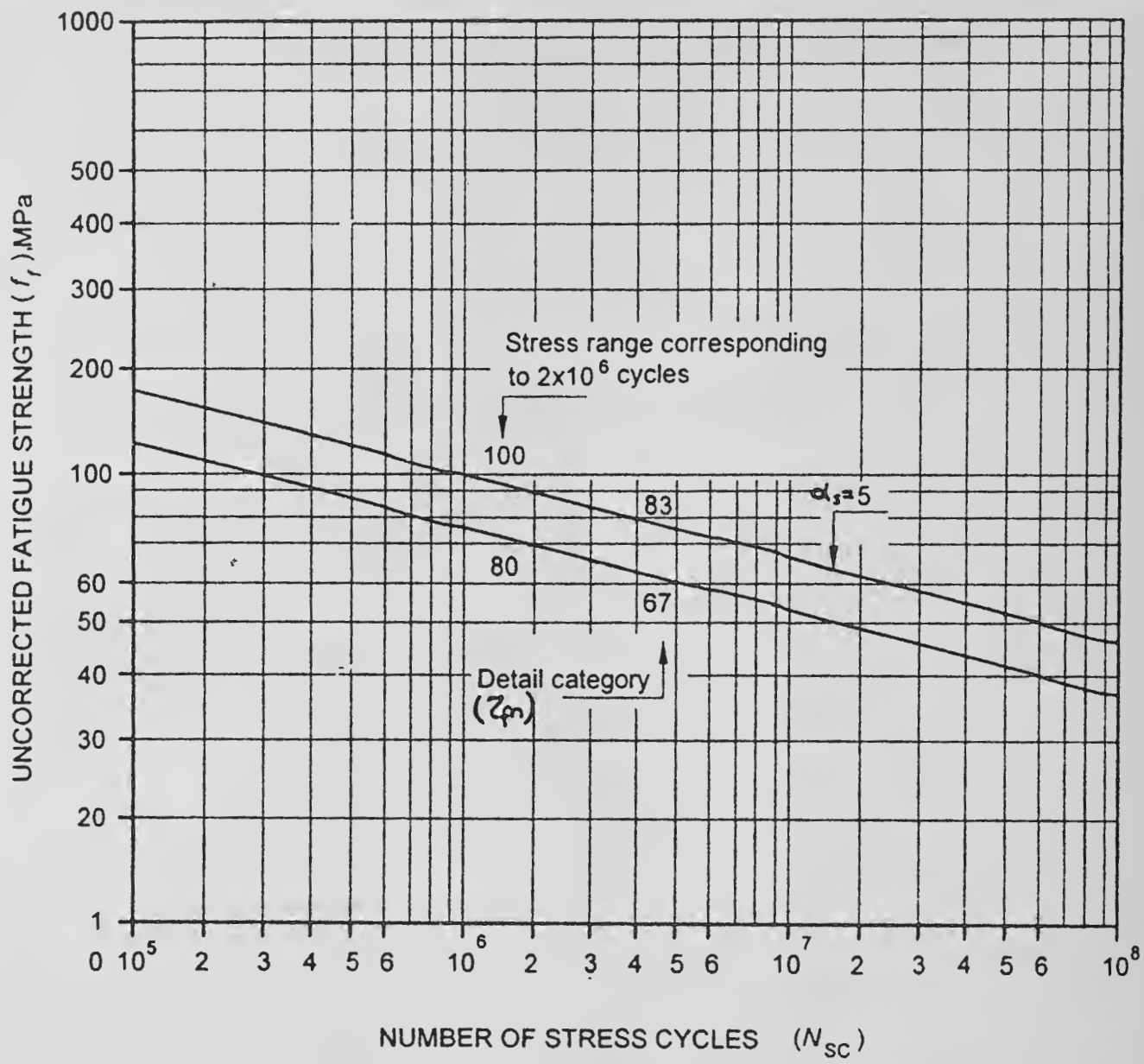

FIG. 23 *S-N* CURVE FOR SHEAR STRESS

SECTION 6(q) DESIGN ASSISTED BY TESTING

20 DESIGN ASSISTED BY TESTING

20.1 Need for Testing

Testing of structures, members or components of structures is not required when designed in accordance with this standard. Testing may be accepted as an alternative to calculations or may become necessary in special circumstances.

Testing of a structural system, member or component may be required to assist the design in the following cases:

a) When the calculation methods available are not adequate for the design of a particular structure, member or component, testing shall be undertaken in place of design by calculation or to supplement the design by calculation;

b) Where rules or methods for design by calculation would lead to uneconomical design, experimental verification may be undertaken to avoid conservative design;

c) When the design or construction is not entirely in accordance with sections of this standard, experimental verification is recommended;

d) When confirmation is required on the consistency of production of material, components, members or structures originally designed by calculations or testing;

e) When the actual performance of an existing structure capacity is in question, testing shall be used to confirm it.

20.1.1 Testing of structural system, member or component shall be of the following categories:

a) *Proof testing* — The application of test loads to a structure, sub-structure, member or connection to ascertain the structural characteristics of only that specific unit.

b) *Prototype testing* — Testing of structures, sub-structures, members or connections is done to ascertain the structural characteristics of a class of such structures, sub-structures members or connection, which are nominally identical to the units tested.

20.2 Types of Test

20.2.1 *Acceptance Test*

This is intended as a non-destructive test for confirming structural performance. It should be recognized that

the loading applied to certain structures might cause permanent distortions. Such effects do not necessarily indicate structural failure in acceptance test. However, the possibility of their occurrence should be agreed to before testing.

The load for acceptance test, $F_{test,a}$ shall be determined from:

$F_{test,a}$ = (Self weight) + (1.15 × Remainder of the permanent load) + (1.25 × Variable load)

The assembly shall satisfy the following criteria:

a) It shall demonstrate substantially linear behaviour under test loading; and

b) On removal of the test load, the residual deflection shall not exceed 20 percent of the maximum-recorded deflection.

If the above criteria are not satisfied the test may be repeated one more time only, when the assembly shall satisfy the following criteria:

1) It shall demonstrate substantially linear behaviour on the second application of test loading, and

2) Corresponding recorded residual deflection in the second test shall not exceed 10 percent of the maximum deflection during the test.

20.2.2 *Strength Test*

Strength test is used to confirm the calculated resistance of a structure or component. Where a number of items are to be constructed to a common design, and one or more prototypes are tested to confirm their strength, the others may be accepted without any additional test; provided they are similar in all relevant respects to the prototype.

Before carrying out the strength test, the specimen should first be subjected to and satisfy the acceptance test. Since the resistance of the assembly under test depends on the material properties, the actual yield strength of all the steel materials in the assembly shall be determined from coupon {test piece as defined in the accepted standard [6-6(7)]} tests. The mean value of the yield strength, f_{ym}, taken from such tests shall be determined with due regard to the importance of each element in the assembly. The strength test load $F_{test,s}$ (including self weight) shall be determined from:

$$F_{test,s} = \gamma_{mi} F_d \left(f_{ym} / f_y \right)$$

where

f_y = characteristic yield stress of the material as assumed in the design;

F_d = factored design load for the ultimate limit state; and

γ_{mi} = partial safety factor for the type of failure, as prescribed in this standard.

At this load there shall be no failure by buckling or rupture of any part of the structure or component tested. On removal of the test load, the deflection should decrease by at least 20 percent of the maximum deflection at $F_{test,s}$.

20.2.3 *Test to Failure (Ultimate Strength Test)*

The objective of a test to failure is to determine the design resistance from the ultimate resistance. In this situation it is still desirable to carry out the acceptance and strength tests, before test to failure.

Not less than three tests shall be carried out on nominally identical specimens. An estimate should be made of the anticipated ultimate resistance as a basis for such tests. During a test to failure, the loading shall first be applied in increments up to the strength test load. Subsequent load increments shall then be determined from consideration of the principal load deflection plot. The test load resistance, $F_{test.R}$ shall be determined as that load at which the specimen is unable to sustain any further increase in load. At this load, gross permanent distortion is likely to have occurred and in some cases such large gross deformation may define the test limit. If the deviation of any individual test result exceeds 10 percent of the mean value obtained for all the three tests, at least three more tests shall be carried out. When the deviation from the mean does not exceed 10 percent of the mean, the design resistance may be evaluated as given below:

a) When the failure is ductile, the design resistance, F_d may be determined from:

$$F_d = 0.9 F_{test,\,Min} (f_y / f_{ym}) / \gamma_{m0}$$

where

$F_{test,\,Min}$ = minimum test result from the tests to failure,

f_{ym} = average yield strength as obtained from the material tests, and

f_y = characteristic yield stress of the grade of steel.

b) In the case of a sudden (brittle) rupture type failure, the design resistance may be determined from:

$$F_d = 0.9 F_{test,\,Min} (f_u / f_{um}) / \gamma_{m1}$$

where

f_u = characteristic ultimate stress of the grade of steel used, and

f_{um} = average ultimate tensile strength of the material obtained from tests.

c) In the case of a sudden (brittle) buckling type failure, the design resistance shall be determined from:

$$F_d = 0.75 F_{test.\,Min} (f_y / f_{ym}) / \gamma_{m0}$$

d) In ductile buckling type failure in which the relevant slenderness λ can be reliably assessed, the design resistance may be determined from:

$$F_d = 0.9 F_{test,Min} \left[(\chi f_y / \chi_m f_{ym}) / \gamma_{m0} \right]$$

where

χ = reduction factor for the relevant buckling curve, and

χ_m = value of χ when the yield strength is f_{ym}.

20.2.4 *Check Tests*

Where a component or assembly is designed on the basis of strength tests or tests to failure and a production run is carried out of such items, an appropriate number of samples (not less than two) shall be selected from each production batch at random for check tests.

20.2.4.1 The samples shall be carefully examined to ensure that they are similar in all respects to the prototype tested, particular attention being given to the following:

a) Dimensions of components and connections,

b) Tolerance and workmanship, and

c) Quality of steel used, checked with reference to mill test certificates.

20.2.4.2 Where it is not possible to determine either the variations or the effect of variations from the prototype, an acceptance test shall be carried out as a check test.

20.2.4.3 In this check test, the deflections shall be measured at the same positions as in the acceptance test of the prototype. The maximum measured deflection shall not exceed 120 percent of the deflection recorded during the acceptance test on the prototype and the residual deflection should not be more than 105 percent of that recorded for the prototype.

20.3 Test Conditions

a) Loading and measuring devices shall be calibrated in advance.

b) The design of the test rig shall be such that:

   1) Loading system adequately simulates the magnitude and distribution of the loading,

   2) It allows the specimen to perform in a manner representative of service conditions,

   3) Lateral and torsional restraint, if any, should be representative of those in service,

   4) Specimen should be free to deflect under load according to service condition,

   5) Loading system shall be able to follow the movements of the specimen without interruption or abnormal restraints,

   6) Inadvertent eccentricities at the point of application of the test loads and at the supports are avoided.

c) Test load shall be applied to the unit at a rate as uniform as practicable.

d) Deflections should be measured at sufficient points of high movements to ensure that the maximum value is determined.

e) If the magnitude of stresses in a specimen is to be determined, the strain at the desired location may be measured and the corresponding stress calculated.

f) Prior to any test, preliminary loading (not exceeding the characteristic values of the relevant loads) may be applied and then removed, in order to set the test specimen on to the test rig.

20.4 Test Loading

20.4.1 Where the self-weight of the specimen is not representative of the actual permanent load in service, allowance for the difference shall be made in the calculation of test loads to be applied.

20.4.2 On the attainment of maximum load for either acceptance or strength tests, this load shall be maintained for at least 1 h. Reading of load and deflection shall be taken at intervals of 15 min and the loading shall be maintained constant until there is no significant increase in deflection during a 15 min period or until at least 1 h has elapsed.

20.4.3 The test load shall be equal to the design load for the relevant limit state in proof testing.

20.4.4 The test load in prototype testing shall be equal to the design load for the relevant limit state as multiplied by the appropriate factor given in Table 27.

20.5 Criteria for Acceptance

20.5.1 *Acceptance for Strength*

The test structure, sub-structure, member or connection shall be deemed to comply with the requirements for strength if it is able to sustain the strength test load for at least 15 min.

It shall then be inspected to determine the nature and extent of any damage incurred during the test. The effects of the damage shall be considered and if necessary appropriate repairs to the damaged parts carried out.

20.5.2 *Acceptance for Serviceability*

The maximum deformation of the structure or member under the serviceability limit state test load shall be within the serviceability limit values appropriate to the structure.

Table 27 Factors to Allow for Variability of Structural Units

(*Clause* 20.4.4)

Sl No.	No. of Similar Units to be Tested	For Strength Limit State	For Serviceability Limit State
(1)	(2)	(3)	(4)
i)	1	1.5	1.2
ii)	2	1.4	1.2
iii)	3	1.3	1.2
iv)	4	1.3	1.1
v)	5	1.3	1.1
vi)	10	1.2	1.1

21 DURABILITY

21.1 General

A durable steel structure is one that performs satisfactorily the desired function in the working environment under the anticipated exposure condition during its service life, without deterioration of the cross-sectional area and loss of strength due to corrosion.

The material used, the detailing, fabrication, erection and surface protection measures should all address the corrosion protection and durability requirements.

21.2 Requirements for Durability

21.2.1 *Shape, Size, Orientation of Members, Connections and Details*

The design, fabrication and erection details of exposed structures should be such that good drainage of water is ensured. Standing pool of water, moisture accumulation and rundown of water for extended duration shall be avoided.

The details of connections should ensure that,

a) all exposed surfaces are easily accessible for inspection and maintenance; and

b) all surfaces, not so easily accessible are completely sealed against ingress of moisture.

21.2.2 *Exposure Condition*

21.2.2.1 *General environment*

The general environment, to which a steel structure is exposed during its working life is classified into five levels of severity, as given in Table 28.

21.2.2.2 *Abrasion*

Specialist literature may be referred for durability of surfaces exposed to abrasive action as in machinery, conveyor belt support system, storage bins for grains or aggregates.

21.2.2.3 *Exposure to sulphate attack*

Appropriate coatings may be used when surfaces of structural steel are exposed to concentration of sulphates (SO_3) in soil, ground water, etc.

When exposed to very high sulphate concentrations of more than 2 percent in soil and 5 percent in water, some form of lining such as polyethylene, polychloroprene sheet or surface coating based on asphalt, chlorinated rubber, epoxy or polymethane material should be used to completely avoid access of the solution to the steel surface.

Table 28 Environmental Exposure Conditions

(*Clause* 21.2.2.1)

Sl No. (1)	Environmental Classifications (2)	Exposure Conditions (3)
i)	Mild	Surfaces normally protected against exposure to weather or aggressive condition as in interior of buildings, except when located in coastal areas
ii)	Moderate	Structural steel surfaces: a) Exposed to condensation and rain b) Continuously under water c) Exposed to non-aggressive soil/ groundwater d) Sheltered from saturated salt air in coastal areas
iii)	Severe	Structural steel surfaces: a) Exposed to severe frequent rain b) Exposed to alternate wetting and drying c) Severe condensation d) Completely immersed in sea water e) Exposed to saturated salt air in coastal area
iv)	Very severe	Structural steel surface exposed to: a) Sea water spray b) Corrosive fumes c) Aggressive sub-soil or ground water
v)	Extreme	Structural steel surfaces exposed to: a) Tidal zones and splash zones in the sea b) Aggressive liquid or solid chemicals

21.2.3 *Corrosion Protection Methods*

The methods of corrosion protection are governed by actual environmental conditions as specified in good practices [6-6(40)]. The main corrosion protection methods are given below:

a) Controlling the electrode potential,

b) Inhibitors, and

c) Inorganic/metal coatings or organic/paint systems.

21.2.4 *Surface Protection*

21.2.4.1 In the case of mild exposure, a coat of primer after removal of any loose mill scale may be adequate. As the exposure condition becomes more critical, more elaborate surface preparations and coatings become necessary. In case of extreme environmental classification, protection shall be as per specialist literature. Table 29 gives guidance to protection of steelwork for different desired lives.

21.2.4.2 Steel surfaces shall be provided with at least one coat of primer immediately after its surface preparation, such as by sand blasting to remove all mill scale and rust and to expose the steel.

21.2.4.3 Steel without protective coating shall not be stored for long duration in outdoor environment.

21.2.4.4 Surfaces to transfer forces by friction as in HSFG connections shall not be painted. However, it shall be ensured that moisture is not trapped on such surfaces after pre-tensioning of bolts by proper protective measures.

Table 29(a) Protection Guide for Steel Work Application – Desired Life of Coating System in Different Environments

(*Clause* 21.2.4.1)

Sl No.	Atmospheric Condition/ Environmental Classification	Coating System					
		1	2	3	4	5	6
(1)	(2)	(3)	(4)	(5)	(6)	(7)	(8)
i)	Normal inland (rural and urban areas), mild	12 years	18 years	20 years	About 20 years	About 20 years	Above 20 years
ii)	Polluted inland (high airborne sulphur dioxide), moderate	10 years	15 years	12 years	About 18 years	15 - 20 years	Above 20 years
iii)	Normal coastal (as normal inland plus high airborne salt levels), severe	10 years	12 years	20 years	About 20 years	About 20 years	Above 20 years
iv)	Polluted coastal (as polluted inland plus high airborne salt levels), very severe or extreme	8 years	10 years	10 years	About 15 years	15 - 20 years	Above 20 years

21.2.4.5 Members to be assembled by welding shall not be pre-painted at regions adjacent to the location of such welds. However, after welding, appropriate protective coatings shall be applied in the region, as required by the exposure conditions. If the contact surfaces cannot be properly protected against ingress of moisture by surface coating, they may be completely sealed by appropriate welds.

21.2.4.6 Pre-painted members shall be protected against abrasion of the coating during transportation, handling and erection.

21.2.5 *Special Steels*

Steels with special alloying elements and production process to obtain better corrosion resistance may be used as per specialist literature.

SECTION 6(s) FIRE RESISTANCE

22 FIRE RESISTANCE

22.1 Requirements

The requirements shall apply to steel building elements designed to exhibit a required fire-resistance level (FRL) as per the relevant specifications. The provisions of this section are quite rudimentary and simplistic. Specialist literature for design of steel structures for fire resistance and design based on testing may be necessary for a more comprehensive design of steel buildings to resist fire.

22.1.1 For protected steel members and connections, the thickness of protection material (h_i) shall be greater than or equal to that required to give a period of structural adequacy (PSA) greater than or equal to the required FRL.

Table 29(b) (i) Protection Guide for Steel Work Application — Specification for Different Coating System (Shop Applied Treatments)

(*Clause* 21.2.4.1)

Sl No.	Protection	Coating System					
		1	2	3	4	5	6
(1)	(2)	(3)	(4)	(5)	(6)	(7)	(8)
i)	Surface preparation	Blast clean	Blast clean	Blast clean	Blast clean	Girt blast	Blast clean
ii)	Pre-fabrication primer	Zinc phosphate epoxy, 20 μm	2 pack zinc-rich epoxy, 20 μm	–	2 pack zinc-rich epoxy, 20 μm	–	Ethyl zinc silicate, 20 μm
iii)	Post fabrication primer	High-build zinc phosphate modified alkyd, 60 μm	2 pack zinc-rich epoxy, 20 μm	Hot dip galvanized, 85 μm	2 pack zinc-rich epoxy, 25 μm	Sprayed zinc or sprayed aluminium	Ethyl zinc silicate, 60 μm
iv)	Intermediate coat	–	High-build zinc phosphate 25 μm	—	2 pack epoxy micaceous iron oxide	Sealer	Chlorinated rubber alkyd, 35 μm
v)	Top coat	–	–	—	2 pack epoxy micaceous iron oxide, 85 μm	Sealer	–

Table 29(b) (ii) Protection Guide for Steel Work Application – Specification for Different Coating System (Site Applied Treatments)

(*Clause* 21.2.4.1)

Sl No.	Protection	Coating System					
		1	2	3	4	5	6
(1)	(2)	(3)	(4)	(5)	(6)	(7)	(8)
i)	Surface preparation	As necessary	As necessary	No site treatment	As necessary	No site treatment	As necessary
ii)	Primer	Touch in	Touch in	–	–	–	Touch in
iii)	Intermediate coat	–	Modified Alkyd Micaceous iron oxide, 50 µm	–	Touch In	–	High-build micaceous iron oxide Chlorinated rubber Micaceous, 75 µm
iv)	Top coat	High-build Alkyd finish, 60µm	Modified Alkyd Micaceous iron oxide, 50 µm	–	High-build chlorinated rubber	–	High-build iron oxide Chlorinated rubber, 75 µm

22.1.2 For unprotected steel members and connections, the exposed surface area to mass ratio (k_{sm}) shall be less than or equal to that required to give a PSA equal to the required FRL.

22.2 Fire Resistance Level

The required FRL shall be as prescribed in Part 4 'Fire and Life Safety' of the Code as appropriate or in building specifications or as required by the user or the city ordinance. The FRL specified in terms of the duration (in min) of standard fire load without collapse depends upon;

a) the purpose for which structure is used; and

b) the time taken to evacuate in case of fire.

22.3 Period of Structural Adequacy (PSA)

22.3.1 The calculation of PSA involves:

a) Calculation of the strength of the element as a function of temperature of the element and the determination of limiting temperature;

b) Calculation of the thermal response of the element, that is calculation of the variation of the temperature of the element or the parts of the element with time, when exposed to fire; and

c) Determination of PSA at which the temperature of the element or parts of the element reaches the limiting temperature.

22.3.2 *Determination of Period of Structural Adequacy*

The period of structural adequacy (PSA) shall be determined using one of the following methods:

a) *By calculation:*

1) determining the limiting temperature of the steel (T_l) in accordance with **22.5**; and

2) determining the PSA as the time (t) (in min) from the start of the test to the time at which the limiting steel temperature is attained, in accordance with **22.6** for protected members and **22.7** for unprotected members.

b) By direct application of a single test in accordance with **22.8**; or

c) By calculation of the temperature of the steel member by using a rational method of analysis confirmed by test data or by methods available in specialist literature.

22.4 Variation of Mechanical Properties of Steel with Temperature

22.4.1 *Variation of Yield Stress with Temperature*

The influence of temperature on the yield stress of steel shall be taken as follows for structures of mild steels and high strength low alloy steels:

$$\frac{f_y(T)}{f_y(20)} = \frac{905 - T}{690} \leq 1.0$$

where,

$f_y(T)$ = yield stress of steel at T °C,

$f_y(20)$ = yield stress of steel at 20°C (room temperature), and

T = temperature of the steel, in °C.

This relationship is shown by Curve 1 in Fig. 24.

For temperature less than 215°C no reduction in the yield stress need to be considered.

22.4.2 *Variation of Modulus of Elasticity with Temperature*

The influence of temperature on the modulus of

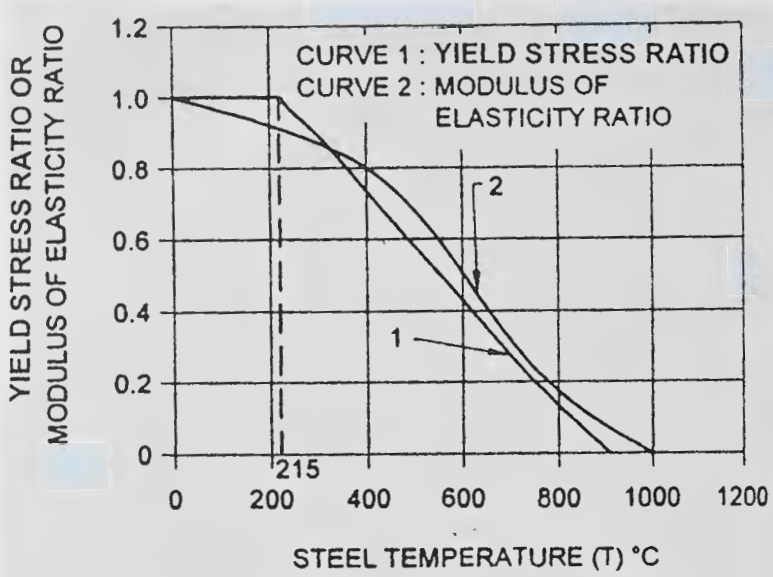

FIG. 24 VARIATION OF MECHANICAL PROPERTIES OF STEEL WITH TEMPERATURE

elasticity shall be taken as follows for structures of mild steels and high strength low alloy steels:

$$\frac{E(T)}{E(20)} = 1.0 + \left[\frac{T}{2\,000\left[\ln\left(\frac{T}{1\,100}\right)\right]}\right]$$

when $0°C < T \leq 600°C$

$$= \frac{690\left(1 - \frac{T}{1\,000}\right)}{T - 53.5} \quad \text{when } 600°C < T \leq 1\,000°C$$

where

$E(T)$ = modulus of elasticity of steel at T°C, and

$E(20)$ = modulus of elasticity of steel at 20°C (room temperature).

This relationship is shown by Curve 2 in Fig. 24.

22.4.3 For special steel with higher temperature resistance, such as TMCP steels, the manufacturer's recommendation shall be used to obtain the variation of yield strength and modulus of elasticity of steel with temperature.

22.5 Limiting Steel Temperature

The limiting steel temperature (T_l), in °C, in the case of ordinary steels, shall be calculated as follows:

$$T_l = 905 - 690\, r_f$$

where

r_f = ratio of the design action on the member under fire to the design capacity of the member ($R_d = R_u/\gamma_m$) at room temperature;

R_d, R_u = design strength and ultimate strength of the member at room temperature, respectively; and

γ_m = partial safety factor for strength.

The design action under fire shall consider the following:

a) Reduced bond likely under fire, and

b) Effects of restraint to expansion of the elements during fire.

Limiting steel temperature for special steels may be appropriately calculated using the thermal characteristics of the material obtained from the supplier of the steel.

22.6 Temperature Increase with Time in Protected Members

22.6.1 The time (t) at which the limiting temperature (T_l) is attained shall be determined by calculation on the basis of a suitable series of fire tests in accordance with **22.6.2** or from the results of a single test in accordance with **22.6.3**.

22.6.1.1 For beams and for all members with a four-sided fire exposure condition, the limiting temperature (T_l) shall be taken as the average of all of the temperatures measured at the thermocouple locations on all sides.

22.6.1.2 For columns with a three-sided fire exposure condition, the limiting temperature (T_l) shall be taken as the average of the temperatures measured at the thermocouple locations on the face farthest from the wall. Alternatively, the temperatures from members with a four-sided fire exposure condition and having the same surface area to mass ratio may be used.

22.6.2 *Temperature Based on Test Series*

Calculation of the variation of steel temperature with time shall be by interpolation of the results of a series of fire tests using the regression analysis equation specified in **22.6.2.1**, subject to the limitations and conditions of **22.6.2.3**.

22.6.2.1 *Regression analysis*

The relationship between temperature (T) and time (t) for a series of tests on a group shall be calculated by least-square regression as follows:

$$t = k_0 + k_1 h_i + k_2\left(\frac{h_i}{k_{sm}}\right) + k_3 T + k_4 h_i T + k_5\left(\frac{h_i T}{k_{sm}}\right) + k_6\left(\frac{T}{k_{sm}}\right)$$

where

t = time from the start of the test, in min;

k_0 to k_6 = regression coefficients from test data (*see* **22.6.2.2**);

h_i = thickness of fire protection material, in mm;

T = steel temperature, in °C obtained from test as given in **22.6.1**, $T > 250°C$; and

k_{sm} = exposed surface area to mass ratio, in 10^3 mm²/kg.

22.6.2.2 *In-lieu* of test results, the values for coefficients in Table 30 may be used in the equation **22.6.2.1** when the test satisfies the conditions specified in **22.6.2.3**.

Table 30 Regression Coefficients, *k*

(*Clause* 22.6.2.2)

k_0 (1)	k_1 (2)	k_2 (3)	k_3 (4)	k_4 (5)	k_5 (6)	k_6 (7)
–25.90	1.698	–13.71	0.030 0	0.000 5	0.514 4	6.633

22.6.2.3 *Limitations and conditions on use of regression analysis*

Test data to be utilized in accordance with **22.6.2.1**, shall satisfy the following:

a) Steel members shall be protected with board, sprayed blanket or similar insulation materials having a dry density less than 1 000 kg/m³;
b) All tests shall incorporate the same fire protection system;
c) All members shall have the same fire exposure condition;
d) Test series shall include at least nine tests;
e) Test series may include prototypes which have not been loaded provided that stickability has been demonstrated; and
f) All members subject to a three-sided fire exposure condition shall be within a group in accordance with **22.9**.

The regression equation obtained for one fire protection system may be applied to another system using the same fire protection material and the same fire exposure condition provided that stickability has been demonstrated for the second system.

A regression equation obtained using prototypes with a four-sided fire exposure condition may be applied to a member with a three-sided fire exposure condition provided that stickability has been demonstrated for the three-sided case.

22.6.3 *Temperature Based on Single Test*

The variation of steel temperature with time measured in a standard fire test may be used without modification provided:

a) Fire protection system is the same as the prototype;
b) Fire exposure condition is the same as the prototype;
c) Fire protection material thickness is equal to or greater than that of the prototype;
d) Surface area to mass ratio is equal to or less than that of the prototype; and
e) Where the prototype has been submitted to a standard fire test in an unloaded condition, stickability has been separately demonstrated.

22.6.4 *Parameters of Importance in the Standard Fire Test*

a) Specimen type, loading, configuration,
b) Exposed surface area to mass ratio,
c) Insulation type, thermal properties and thickness, and
d) Moisture content of the insulation material.

22.7 Temperature Increase with Time in Unprotected Members

The time (t) at which the limiting temperature (T_l) is attained shall be calculated using the following equations:

a) Three-sided fire exposure condition

$$t = 5.2 + 0.022\,1\,T + \left(\frac{0.433T_l}{k_{sm}}\right)$$

b) Four-sided fire exposure condition

$$t = 4.7 + 0.026\,3\,T + \left(\frac{0.213T_l}{k_{sm}}\right)$$

where

t = time from the start of the test, in min;

T = steel temperature, in °C, $500°C \le T \le 750°C$, and

k_{sm} = exposed surface area to mass ratio, 2×10^3 mm²/kg $\le k_{sm} \le 35 \times 10^3$ mm²/kg.

For temperatures below 500°C, linear interpolation shall be used, based on the time at 500°C and an initial temperature of 20°C at t equals 0.

22.8 Determination of PSA from a Single Test

The period of structural adequacy (PSA) determined from a single test may be applied without modification provided:

a) Conditions, specified in **22.6.3** are satisfied,
b) Conditions of support are the same as the

prototype and the restraints are not less favourable than those of the prototype, and

c) Ratio of the design load for fire to the design capacity of the member is less than or equal to that of the prototype.

22.9 Three-Sided Fire Exposure Condition

Members subject to a three-sided fire exposure condition shall be considered in separate groups unless the following conditions are satisfied:

a) The characteristics of the members of a group as given below, shall not vary from one another by more than:

1) Concrete density:

$$\left(\frac{\text{highest in group}}{\text{lowest in group}}\right) \leq 1.25, \text{ and}$$

2) Effective < thickness < (h_e):

$$\left(\frac{\text{largest in group}}{\text{smallest in group}}\right) \leq 1.25$$

where the effective thickness (h_e) is equal to the cross-sectional area excluding voids per unit width, as shown in Fig. 25A.

b) Rib voids shall either be:

1) all open; or

2) all blocked as shown in Fig. 25B.

c) Concrete slabs may incorporate permanent steel deck formwork.

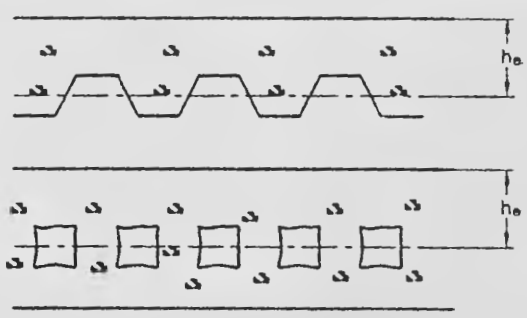

25A Effective Thickness

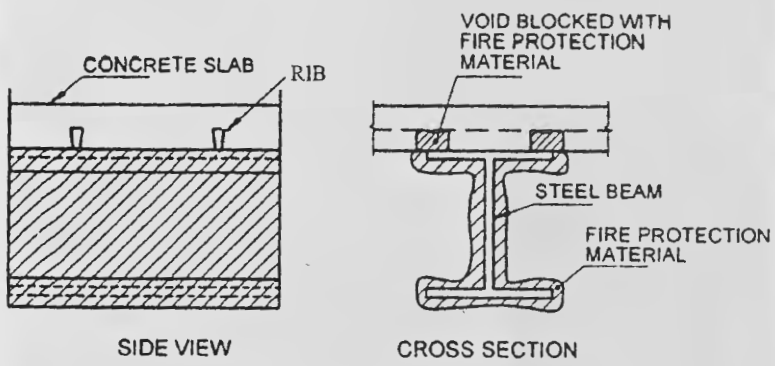

25B Blocking of Rib Voids

FIG. 25 THREE SIDED FIRE EXPOSURE CONDITION REQUIREMENTS

22.10 Special Considerations

22.10.1 *Connections*

Connections shall be protected with the maximum thickness of fire protection material required for any of the members framing into the connection to achieve their respective fire-resistance levels. This thickness shall be maintained over all connection components, including bolt heads, welds and splice plates.

22.10.2 *Web Penetrations*

The thickness of fire protection material at and adjacent to web penetrations shall be the greatest of that required, when:

a) area above the penetration is considered as a three-sided fire exposure condition (k_{sm1}) (*see* Fig. 26);

b) area below the penetration is considered as a four-sided fire exposure condition (k_{sm2}) (*see* Fig. 26); and

c) section as a whole is considered as a three-sided fire exposure condition (k_{sm}) (*see* Fig. 26).

This thickness shall be applied over the full beam depth and shall extend on each side of the penetration for a distance at least equal to the beam depth and not less than 300 mm.

22.11 Fire Resistance Rating

The fire resistance rating of various building components such as walls, columns, beams, and floors are given in Table 31 and Table 32. Fire damage assessment of various structural elements of the

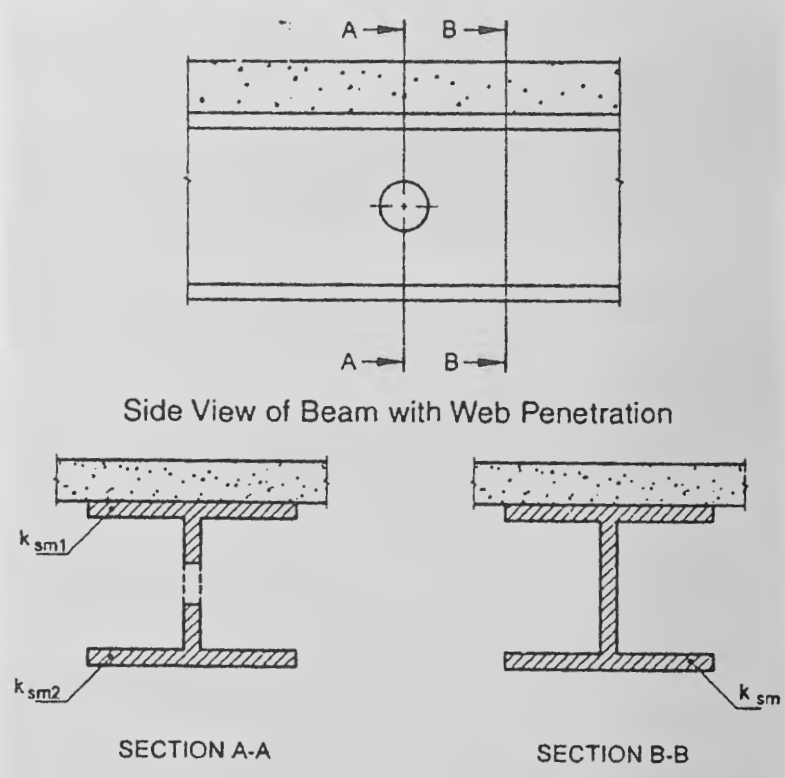

FIG. 26 WEB PENETRATION

Table 31 Encased Steel Columns, 203 mm × 203 mm (Protection Applied on Four Sides)

(*Clause* 22.11)

Sl No.	Nature of Construction and Materials	Minimum Dimensions (in mm), Excluding Any Finish, for a Fire Resistance of				
		1 h	1 ½ h	2 h	3 h	4 h
(1)	(2)	(3)	(4)	(5)	(6)	(7)
i)	Hollow protection (without an air cavity over the flanges):					
	a) Metal lathing with trowelled lightweight aggregate gypsum plaster [1]	13	15	20	32	—
	b) Plasterboard with 1.6 mm wire binding at 100 mm pitch, finished with lightweight aggregate gypsum plaster less than the thickness specified:					
	1) 9.5 mm plaster board	10	15	—	—	—
	2) 19 mm plaster board	10	13	20	—	—
	c) Asbestos insulating boards, thickness of board:					
	1) Single thickness of board, with 6 mm cover fillets at transverse joints	—	19	25	—	—
	2) Two layers. of total thickness	—	—	—	38	50
	d) Solid bricks of clay, composition or sand lime, reinforced in every horizontal joint, unplastered	50	50	50	75	100
	e) Aerated concrete blocks	60	60	60	—	—
	f) Solid blocks of lightweight concrete hollow protection (with an air cavity over the flanges)	50	50	50	60	75
ii)	Asbestos insulating board screwed to 25 mm asbestos battens	12	19	—	—	—
iii)	Solid protections:					
	a) Concrete, not leaner than 1:2:4 mix (unplastered):					
	1) Concrete not assumed to be load bearing, reinforced [2]	25	25	25	50	75
	2) Concrete assumed to be load bearing	50	50	50	75	75
	b) Lightweight concrete, not leaner than 1:2: 4 mix (unplastered) concrete not assumed to be load bearing, reinforced [2]	25	25	25	25	25

[1] So fixed or designed, as to allow full penetration for mechanical bond.

[2] Reinforcement shall consist of steel binding wire not less than 2.3 mm diameter, or a steel mesh weighing not less than 0.5 kg/m^2. In concrete protection, the spacing of that reinforcement shall not exceed 200 mm in any direction.

building and adequacy of the structural repairs can be done by the fire resistance rating for encased steel column and beam (*see* Table 31 and Table 32).

SECTION 6(t) FABRICATION AND ERECTION

23 FABRICATION AND ERECTION

23.1 General

Tolerances for fabrication of steel structures shall conform to the accepted standard [6-6(41)]. Tolerances for erection of steel structures shall conform to the accepted standard [6-6(42)]. For general guidance on fabrication by welding, reference may be made to good practice [6-6(43)].

23.2 Fabrication Procedures

23.2.1 *Straightening*

Material shall be straightened or formed to the specified configuration by methods that will not reduce the properties of the material below the values used in design. Local application of pressure at room or at elevated temperature or other thermal means may be used for straightening, provided the above is satisfied.

23.2.2 *Clearances*

The erection clearance for cleated ends of members, connecting steel to steel should preferably be not greater than 2.0 mm at each end. The erection clearance at ends of beams without web cleats should be not more than 3 mm at each end. Where for practical reasons, greater clearance is necessary, suitably designed seating should be provided.

23.2.2.1 The holes for bolts may be made as given in Table 19, unless otherwise specified by the engineer. The hole diameter in base plates shall not exceed the anchor bolt diameter by more than 6 mm.

23.2.2.2 In friction type of connection clearance may be maintained, unless specified otherwise in the design document.

Table 32 Encased Steel Beams, 406 mm × 176 mm (Protection Applied on Three Sides)

(*Clause* 22.11)

Sl No.	Nature of Construction and Materials	Minimum Thickness (in mm) of Protection for a Fire Resistance of					
		½ h	1 h	1½ h	2 h	3 h	4 h
(1)	(2)	(3)	(4)	(5)	(6)	(7)	
i)	Hollow protection (without an air cavity beneath the lower flanges):						
	a) Metal lathing with trowelled lightweight aggregate gypsum plaster [1]	13	13	15	20	25	—
	b) Plasterboard with 1.6 mm wire binding at 100 mm pitch, finished with lightweight aggregate gypsum plaster less than the thickness specified [2]:						
	1) 9.5 mm plaster board	10	10	15	—	—	—
	2) 19 mm plaster board	10	10	13	20	—	—
	c) Asbestos insulating boards, thickness of board:						
	1) Single thickness of board, with 6 mm cover fillets at transverse joints	—	—	19	25	—	—
	2) Two layers, of total thickness	—	—	—	—	38	50
ii)	Hollow protection (with an air cavity below the lower flange):						
	Asbestos insulating board screwed to 25 mm asbestos battens	9	12	—	—	—	—
iii)	Solid protections:						
	a) Concrete, not leaner than 1:2:4 mix (unplastered):						
	1) Concrete not assumed to be load bearing, reinforced [3]	25	25	25	25	50	75
	2) Concrete assumed to be load bearing	50	50	50	50	75	75
	b) Lightweight concrete, not leaner than 1:2:4 mix (unplastered) [4]	25	25	25	25	40	60

[1] So fixed or designed, as to allow full penetration for mechanical bond.

[2] Where wire binding cannot be used, expert advice should be sought regarding alternative methods of support to enable the lower edges of the plasterboard to be fixed together and to the lower flange, and for the top edge of the plasterboard to be held in position.

[3] Reinforcement shall consist of steel binding wire not less than 2.3 mm in diameter, or a steel mesh weighing not less than 0.5 kg/m^2. In concrete protection, the spacing of that reinforcement shall not exceed 200 mm in any direction.

[4] Concrete not assumed to be load bearing, reinforced.

23.2.3 *Cutting*

Cutting shall be effected by sawing, shearing, cropping, machining or thermal cutting process. Shearing, cropping and gas cutting shall be clean, reasonably square, and free from any distortion. Should the inspector find it necessary, the edges shall be ground after cutting. Planning or finishing of sheared or gas-cut edges of plates or shapes shall not be required, unless specially noted on drawing or included in stipulated edge preparation for welding or when specifically required in the following section.

Re-entrant corners shall be free from notches and shall have largest practical radii with a minimum radius of 15 mm.

23.2.3.1 *Shearing*

Shearing of items over 16 mm thick to be galvanized and subject to tensile force or bending moment shall not be carried out, unless the item is stress relieved subsequently.

The use of sheared edges in the tension area shall be avoided in location subject to plastic hinge rotation at factored loading.

23.2.3.2 *Thermal cutting*

Gas cutting of high tensile steel by mechanically controlled torch may be permitted, provided special care is taken to leave sufficient metal to be removed by machining, so that all metal that has been hardened by flame is removed. Hand flame cutting may be permitted only subject to the approval of the inspecting authority.

Except where the material is subsequently joined by welding, no load shall be transmitted through a gas cut surface.

Thermally cut free edges, which shall be subject to calculated static tensile stress shall be free from round bottom gouges greater than 5 mm deep. Gouges greater than 5 mm deep and notches shall be removed by grinding.

23.2.4 *Holing*

23.2.4.1 Holes through more than one thickness of material for members, such as compound stanchion and girder flanges, shall be where possible, drilled after the members are assembled and tightly clamped or bolted together. A round hole for a bolt shall either be machine flame cut, or drilled full size, or sub-punched 3 mm undersize and reamed to size or punched full size.

Hand flame cutting of a bolt hole shall not be permitted except as a site rectification measure for holes in column base plates.

23.2.4.2 *Punching*

A punched hole shall be permitted only in material whose yield stress (f_y) does not exceed 360 MPa and where thickness does not exceed ($5\ 600/f_y$) mm. In cyclically loaded details, punching shall be avoided in plates with thickness greater than 12 mm.

For greater thickness and cyclically loaded details, holes shall be either drilled from the solid or sub-punched or sub drilled and reamed.

The die for all sub-punched holes or the drill for all sub-drilled holes shall be at least 3 mm smaller than the required diameter of finished hole.

23.2.4.3 *Oversize holes*

A special plate washer of minimum thickness 4 mm shall be used under the nut, if the hole diameter is larger than the bolt diameter by 3 mm or more.

Oversize hole shall not exceed $1.25d$ or $(d + 8)$ mm in diameter, were d is the nominal bolt diameter, in mm.

A short slotted hole shall not exceed the appropriate hole size in width and $1.33d$ in length. A long slotted hole shall not exceed the appropriate hole size in width and $2.5d$, in length. If the slot length is larger than those specified, shear transfer in the direction of slot is not admissible even in friction type of connection.

Slotted holes shall be punched either in one operation or else formed by punching or drilling two round holes apart and completed by high quality mechanically controlled flame cutting and dressing to ensure that bolt can freely travel the full length of the slot.

23.2.4.4 *Fitted bolt holes*

Holes for turned and fitted bolts shall be drilled to a diameter equal to the nominal diameter of the shank or barrel subject to tolerance specified in the accepted standards [6-6(44)]. Preferably, parts to be connected with close tolerance or barrel bolts shall be firmly held together by tacking bolts or clamps and the holes drilled through all the thicknesses at one operation and subsequently reamed to size. All holes not drilled through all thicknesses at one operation shall be drilled to a smaller size and reamed out after assembly. Where this is not practicable, the parts shall be drilled and reamed separately through hard bushed steel jigs.

23.2.4.5 Holes for rivets or bolts shall not be formed generally by gas cutting process. However, advanced gas cutting processes such as plasma cutting may be used to make holes in statically loaded members only. In cyclically loaded members subjected to tensile stresses which are vulnerable under fatigue, gas cutting shall not be used unless subsequent reaming is done to remove the material in the heat affected zone around the hole.

23.3 Assembly

All parts of bolted members shall be pinned or bolted and rigidly held together during assembly.

The component parts shall be assembled and aligned in such a manner that they are neither twisted nor otherwise damaged, and shall be so prepared that the specified camber, if any, is provided.

23.3.1 *Holes in Assembly*

When holes are drilled in one operation through two or more separable parts, these parts, when so specified by the engineer, shall be separated after drilling and the burrs removed.

Matching holes for rivets and black bolts shall register with each other so that a gauge of 1.5 mm or 2.0 mm (as the case may be, depending on whether the diameter of the rivet or bolt is less than or more than 25 mm) less in diameter than the diameter of the hole will pass freely through the assembled members in the direction at right angle to such members.

Drilling done during assembly to align holes shall not distort the metal or enlarge the holes.

Holes in adjacent part shall match sufficiently well to permit easy entry of bolts. If necessary, holes except oversize or slotted holes may be enlarged to admit bolts, by moderate amount of reaming.

23.3.2 *Thread Length*

When design is based on bolts with unthreaded shanks in the shear plane, appropriate measures shall be specified to ensure that, after allowing for tolerance, neither the threads nor the thread run-out be in the shear plane.

The length of bolt shall be such that at least one clear thread shows above the nut and at least one thread plus the thread run out is clear beneath the nut after tightening. One washer shall be provided under the rotated part.

23.3.3 *Assembly Subjected to Vibration*

When non-preloaded bolts are used in a structure subject to vibration, the nuts shall be secured by locking devices or other mechanical means. The nuts of preloaded bolts may be assumed to be sufficiently secured by the normal tightening procedure.

23.3.4 *Washers*

Washers are not normally required on non-preloaded bolts, unless specified otherwise. Tapered washers shall be used where the surface is inclined at more than 3° to a plane perpendicular to the bolt axis.

Hardened washer shall be used for preloaded bolts or the nut, whichever is to be rotated.

All material within the grip of the bolt shall be steel and no compressible material shall be permitted in the grip.

23.4 Riveting

23.4.1 Rivets shall be heated uniformly throughout their length, without burning or excessive scaling, and shall be of sufficient length to provide a head of standard dimensions. These shall, when driven, completely fill the holes and, if countersunk, the countersinking shall be fully filled by the rivet. If required, any protrusion of the countersunk head shall be dressed off flush.

23.4.2 Riveted member shall have all parts firmly drawn and held together before and during riveting, and special care shall be taken in this respect for all single-riveted connections. For multiple riveted connections, a service bolt shall be provided in every third or fourth hole.

23.4.3 Wherever practicable, machine riveting shall be carried out by using machines of the steady pressure type.

23.4.4 All loose, burned or otherwise defective rivets shall be cut out and replaced before the structure is loaded, and special care shall be taken to inspect all single riveted connections.

23.4.5 Special care shall be taken in heating and driving long rivets.

23.5 Bolting

23.5.1 In all cases where the full bearing area of the bolt is to be developed, the bolt shall be provided with a washer of sufficient thickness under the nut to avoid any threaded portion of the bolt being within the thickness or the parts bolted together, unless accounted for in design.

23.5.2 Pre-tensioned bolts shall be subjected to initial tension (the proof stress) by an appropriate pre-calibrated method.

23.6 Welding

23.6.1 Welding shall be in accordance with good practices [6-6(45)], as appropriate.

23.6.2 For welding of any particular type of joint, welders shall give evidence acceptable to the purchaser of having satisfactorily completed appropriate tests as prescribed in good practices [6-6(46)], as relevant.

23.6.3 Assembly and welding shall be carried out in such a way to minimise distortion and residual stress and that the final dimensions are within appropriate tolerances.

23.7 Machining of Butts, Caps and Bases

23.7.1 Column splices and butt joints of struts and compression members, depending on contact for stress transmission, shall be accurately machined and close-butted over the whole section with a clearance not exceeding 0.2 mm locally, at any place. Sum of all such clearance shall not be more than 30 percent of the contact area for stress transmission. In column caps and bases, the ends of shafts together with the attached gussets, angles, channels, etc; after connecting together should be accurately machined so that clearance between the contact surfaces shall not exceed 2 mm locally, subject further to the condition that sum total of all such clearance shall not exceed 30 percent of the total contact area for stress transmission. Care should be taken that these gussets, connecting angles or channels are fixed with such accuracy that they are not reduced in thickness by machining by more than 2.0 mm.

23.7.2 Where sufficient gussets and rivets or welds are provided to transmit the entire loading [*see* Section 6(d)], the column ends need not be machined.

23.7.3 *Slab Bases and Caps*

Slab bases and slab caps, except when cut from material with true surfaces, shall be accurately machined over the bearing surfaces and shall be in effective contact with the end of the stanchion, the bearing face which is to be grouted to fit tightly at both top and bottom, unless welds are provided to transmit the entire column face.

23.7.4 To facilitate grouting, sufficient gap shall be left between the base plates and top of pedestal and holes shall be provided where necessary in stanchion bases for the escape of air.

23.8 Painting

23.8.1 Painting shall be done in accordance with the good practices [6-6(47)].

23.8.2 All surfaces, which are to be painted, oiled or otherwise treated, shall be dry and thoroughly cleaned to remove all loose scale and loose rust.

23.8.3 Shop contact surfaces need not be painted unless specified. If so specified, they shall be brought together while the paint is still wet.

23.8.4 Surfaces not in contact, but inaccessible after shop assembly, shall receive the full specified protective treatment before assembly. This does not apply to the interior of sealed hollow sections.

23.8.5 Chequered plates shall be painted but the details of painting shall be specified by the purchaser.

23.8.6 In case of surfaces to be welded, the steel shall not be painted or metal coated within a suitable distance

of any edge to be welded, if the paint specified or the metal coating is likely to be harmful to welders or impair the quality of the welds.

23.8.7 Welds and adjacent parent metal shall not be painted prior to de-slagging, inspection and approval.

23.8.8 Parts to be encased in concrete shall not be painted or oiled.

23.8.9 Contact surface in friction type connection shall not be painted in advance.

23.9 Marking

Each piece of steel work shall be distinctly marked before dispatch, in accordance with a marking diagram and shall bear such other marks as will facilitate erection.

23.10 Shop Erection

23.10.1 The steel work shall be temporarily shop erected complete or as arranged with the inspection agency so that accuracy of fit may be checked before dispatch. The parts shall be shop assembled with sufficient numbers of parallel drifts to bring and keep the parts in place.

23.10.2 In the case of parts drilled or punched, through steel jigs with bushes resulting in all similar parts being interchangeable, the steelwork may be shop erected in such position as arranged with the inspection agency.

23.10.3 In case of shop fabrication using numerically controlled machine data generated by computer software (like CAD), the shop erection may be dispensed with at the discretion of the inspector.

23.11 Packing

All projecting plates or bars and all ends of members at joints shall be stiffened, all straight bars and plates shall be bundled, all screwed ends and machined surfaces shall be suitably packed and all rivets, bolts, nuts, washers and small and loose parts shall be packed separately in cases, so as to prevent damage or distortion during transit.

23.12 Inspection and Testing

23.12.1 The inspecting authority shall have free access at all reasonable times to those parts of the manufacturer's works which are concerned with the fabrication of the steelwork and shall be afforded all reasonable facilities for satisfying himself that the fabrication is being undertaken in accordance with the provisions of this section.

23.12.2 Unless specified otherwise, inspection shall be made at the place of manufacture prior to dispatch and shall be conducted so as not to interfere unnecessarily with the operation of the work.

23.12.3 The manufacturer shall guarantee compliance with the provisions of this standard, if required to do so by the purchaser.

23.12.4 Should any structure or part of a structure be found not to comply with any of the provisions of this section, it shall be liable to rejection. No structure or part of the structure, once rejected shall be resubmitted for test, except in cases where the purchaser or his authorized representative considers the defect as rectifiable.

23.12.5 Defects, which may appear during fabrication, shall be made good with the consent of and according to the procedure laid down by the inspecting authority.

23.12.6 All gauges and templates necessary to satisfy the inspection authority shall be supplied by the manufacturer. The inspecting authority may, at his discretion, check the test results obtained at the manufacturer's works by independent testing at outside laboratory, and should the material so tested be found to be unsatisfactory, the cost of such tests shall be borne by the manufacturer, and if found satisfactory, the cost shall be borne by the purchaser.

23.13 Site Erection

23.13.1 *Plant and Equipment*

The suitability and capacity of all plant and equipment used for erection shall be to the satisfaction of the engineer.

23.13.2 *Storing and Handling*

All structural steel should be so stored and handled at the site that the members are not subjected to excessive stresses and damage by corrosion due to exposure to environment.

23.13.3 *Setting Out*

The positioning and levelling of all steelwork, the plumbing of stanchions and the placing of every part of the structure with accuracy shall be in accordance with the approved drawings and to the satisfaction of the engineer in accordance with the deviation permitted below.

23.13.3.1 *Erection tolerances*

Unloaded steel structure, as erected, shall satisfy the criteria specified in Table 33 within the specified tolerance limits.

Each criterion given in the table shall be considered as a separate requirement, to be satisfied independent of any other tolerance criteria. The erection tolerances specified in Table 33 apply to the following reference points:

a) For a column, the actual centre point of the column at each floor level and at the base, excluding any base-plate or cap-plate. The level of the base plate on pedestal shall be so as to avoid contact with soil and corrosive environment; and

b) For a beam, the actual centre point of the top surface at each end of the beam, excluding any end-plate.'

Table 33 Normal Tolerances after Erection

(*Clause* 23.13.3.1)

Sl No. (1)	Criterion (2)	Permitted Deviation (3)
i)	Deviation of distance between adjacent columns	5 mm
ii)	Inclination of a column in a multi-storey building between adjacent floor levels	$0.002h_s$ where h_s is the storey height
iii)	Deviation of location of a column in a multi-storey building at any floor level from a vertical line through the intended location of the column base	$0.003\ 5 \sum h_b/n^{0.5}$ where $\sum h_b$ is the total height from the base to the floor level concerned and n is the number of storeys from the base to the floor level concerned
iv)	Inclination of a column in a single storey building (not supporting a crane gantry) other than a portal frame	$0.003\ 5h_c$ where h_c is the height of the column
v)	Inclination of the column of a portal frame (not supporting a crane gantry)	Mean: $0.002h_c$ Individual: $0.010h_c$ where h_c is the height of the column

The straightness tolerances specified in Table 34 have been assumed in the derivation of the design stress for the relevant type of member. Where the curvature exceeds these values, the effect of additional curvature on the design calculations shall be reviewed.

Table 34 Straightness Tolerances incorporated in Design Rules

(*Clause* 23.13.3.1)

Sl No. (1)	Criterion (2)	Permitted Deviation (3)
i)	Straightness of a column (or other compression member) between points which will be laterally restrained on completion of erection	$0.001L$ generally, and $0.002L$ for members with hollow cross sections; where, L is the length between points which will be laterally restrained
ii)	Straightness of a compression flange of a beam, relative to the weak axis, between points, which will be laterally restrained on completion of erection	$0.001L$ generally, and $0.002L$ for members with hollow cross sections; where, L is the length between points which will be laterally restrained

A tension member shall not deviate from its correct position relative to the members to which it is connected by more than 3 mm along any setting axis.

23.13.4 *Safety During Fabrication and Erection*

23.13.4.1 All steel materials including fabricated structures, either at fabrication shop or at erection site, shall be handled only by a worker skilled in such jobs; where necessary with load tested lifting devices, having tested wire rope slings of correct size. The devices should be well maintained and operated by experienced operators.

23.13.4.2 Oxygen and acetylene cylinders and their hoses shall have distinctive colours. Cylinders should be stored in upright position in well-ventilated rooms or in open air, not exposed to flames, naked lights or extreme heat and should also be in upright position when they are being used. All gas cutting works shall be done only by experienced skilled gas cutters, equipped with gloves, boots, aprons, goggles and good cutting sets of approved make.

23.13.4.3 While doing any welding work, it should be ensured that the welding machine is earthed and the welding cables are free from damage. The welder and his assistant shall use a face shield or head shield with a welding lens and clear cover glass and their hands, legs and bodies shall be well protected by leather gloves, shoes and aprons. Combustible materials should be kept away from the sparks and globules of molten metals generated in any arc welding. In case of welding in a confined place, it should be provided with an exhaust system to take care of the harmful gases, fumes and dusts generated.

23.13.4.4 In addition to precautions against all the hazards mentioned above, erection workers shall also be protected in the following manner:

a) All workers shall wear helmets and shall also be provided with gloves and shoes. In addition those working at heights shall use safety belts.

b) All structures shall be so braced/guyed during erection that there is no possibility of collapse before erection work is completed.

c) Warning signs such as 'Danger', 'Caution', '440 V', 'Do not smoke', 'Look ahead', etc; should be displayed at appropriate places.

23.13.4.5 For detailed safety precautions during erection, reference shall be made to the good practice [6-6(48)].

23.13.5 *Field Connections*

23.13.5.1 *Field riveting*

Rivets driven at the site shall be heated and driven with the same care as those driven in the shop.

23.13.5.2 *Field bolting*

Field bolting shall be carried out with the same care as required for shop bolting.

23.13.5.3 *Fillet welding*

Field assembly and welding shall be executed in accordance with the requirements for shop fabrications excepting such as manifestly apply to shop conditions only. Where the steel has been delivered painted, the paint shall be removed for a distance of at least 50 mm on either side of the joint.

23.14 Painting after Erection

23.14.1 Before painting of such steel which is delivered unpainted is commenced, all surfaces to be painted shall be dry and thoroughly cleaned from all loose scale and rust, as required by the surface protection specification.

23.14.2 The specified protective treatment shall be completed after erection. All rivet and bolt heads and the site welds after de-slagging shall be cleaned. Damaged or deteriorated paint surfaces shall first be made good with the same type of paint as the shop coat. Where specified, surfaces which will be in contact after site assembly, shall receive a coat of paint (in addition to any shop priming) and shall be brought together while the paint is still wet. No painting shall be used on contact surfaces in the friction connection, unless specified otherwise by the design document.

23.14.3 Where the steel has received a metal coating in the shop, this coating shall be completed on site so as to be continuous over any welds and site rivets or bolts, subject to the approval of the engineer. Painting on site may complete protection. Bolts, which have been galvanized or similarly treated, are exempted from this requirement.

23.14.4 Surface, which will be inaccessible after site assembly, shall receive the full-specified protective treatment before assembly.

23.14.5 Site painting should not be done in frosty or foggy weather, or when humidity is such as to cause condensation on the surfaces to be painted.

23.15 Bedding Requirement

23.15.1 Bedding shall be carried out with Portland cement grout or mortar, as described under **23.15.4** or fine cement concrete in accordance with good practice [6-6(49)].

23.15.2 For multi-storeyed buildings, this operation shall not be carried out until a sufficient number of bottom lengths of stanchions have been properly lined, levelled and plumbed and sufficient floor beams are in position.

23.15.3 Whatever method is employed, the operation shall not be carried out until the steelwork has been finally levelled and plumbed, stanchion bases being supported meanwhile by steel wedges or nuts; and immediately before grouting, the space under the steel shall be thoroughly cleaned.

23.15.4 Bedding of structure shall be carried out with grout or mortar, which shall be of adequate strength and shall completely fill the space to be grouted and shall either be placed under pressure or by ramming against fixed supports. The grouts or mortar used shall be non-shrinking variety.

23.16 Steelwork Tenders and Contracts

A few recommendations are given in Annex F for general information.

ANNEX A

[*Clause* 10.1.1(c)]

ANALYSIS AND DESIGN METHODS

A-1 ADVANCED STRUCTURAL ANALYSIS AND DESIGN

A-1.1 Analysis

For a frame, comprising members of compact section with full lateral restraint, an advanced structural analysis may be carried out, provided the analysis can be shown to accurately model the actual behaviour of that class of frames. The analysis shall take into account the relevant material properties, residual stresses, geometrical imperfections, reduction in stiffness due to axial compression, second-order effects, section strength and ductility, erection procedures and interaction with the foundations.

Advanced structural analysis for earthquake loads shall take into account, as appropriate the response history, torsional response, pounding against adjacent structures, and strain rate effects.

A-1.2 Design

For the strength limit state, it shall be sufficient to satisfy the section capacity requirements of Section 6(h) for the members subjected to bending, of Section 6(g) for axial members, of Section 6(j) for combined forces and of Section 6(k) for connections. Effect of moment magnification given in Section 6(j), instability given in Section 6(g) and lateral buckling given in Section 6(h) need not be considered while designing the member, since advanced analysis methods directly consider these.

An advanced structural analysis for earthquake loads shall recognize that the design basis earthquake loads calculated in accordance with Part 6 'Structural Design, Section 1 Loads, Forces and Effects' of the Code is assumed to correspond to the load at which the first significant plastic hinge forms in the structure.

A-2 SECOND ORDER ELASTIC ANALYSIS AND DESIGN

A-2.1 Analysis

In a second-order elastic analysis, the members shall be assumed to remain elastic, and changes in frame geometry under the design load and changes in the effective stiffness of the members due to axial forces shall be accounted for. In a frame where the elastic buckling load factor (l_{cr}) of the frame as determined in accordance with **10.6** is greater than 5, the changes in the effective stiffness of the members due to axial forces may be neglected.

A-2.2 Design Bending Moment

The design bending moment under factored load shall be taken as the maximum bending moment in the length of the member. It shall be determined either,

a) directly from the second-order analysis; or

b) approximately, if the member is divided into a sufficient number of elements, as the greatest of the element end bending moments, or;

c) by amplifying the calculated design bending moment, taken as the maximum bending moment along the length of a member as obtained by superposition of the simple beam bending moments determined by the analysis.

For a member with zero axial force or a member subject to axial tension, the factored design bending moment shall be calculated as the moment obtained from second-order analysis without any amplification.

For a member with a design axial compressive force as determined from the analysis, the factored design bending moment shall be calculated as follows:

$$M = \delta_b M_m$$

where

δ_b = moment amplification factor for a braced member determined in accordance with Section 6(j).

A-3 FRAME INSTABILITY ANALYSIS

A-3.1 Analysis

Frame instability, as treated here, is related to the design of multi-storey rigid-jointed frames subject to side sway. The elastic critical load factor, λ_{cr} may be determined using the deflection method as given in **A-3.2** or any other recognized method. This is used to calculate the amplified sway moments for elastic designs and to check frame stability in plastic designs. The elastic critical load factor, λ_{cr} of a frame is the ratio by which each of the factored loads would have to be increased to cause elastic instability.

A-3.2 Deflection Method

An accurate method of analysis (ordinary linear elastic analysis) should be used to determine the horizontal deflections of the frame due to horizontal forces applied at each floor level, which is equal to the notional horizontal load in **10.3.6**. Allowance should be made

for the degree of rigidity of the base as given in **A-3.2** in this deflection calculation.

The base stiffness should be determined by reference to **10.3.4**.

The elastic critical load factor, λ_{cr} is calculated as:

$$\lambda_{cr} = \frac{1}{200\phi_{s,\,Max}}$$

where

$\phi_{s,\,Max}$ = largest value of the sway index where, ϕ_s given by:

$$\phi_{si} = \frac{\delta_{ui} - \delta_{Li}}{h_i}$$

where

h_i = storey height;

δ_{ui} = horizontal deflection of the top of the storey due to the combined gravity and notional loads; and

δ_{Li} = horizontal deflection of the bottom of the storey due to gravity and notional load.

A-3.3 Partial Sway Bracing

In any storey the stiffening effect of infill wall panels may be allowed for by introducing a diagonal strut in that storey of area A, given by:

$$A = \frac{k_3 \sum K_c}{h(h/b)}\left[1 + (h/b)^2\right]^{3/2}$$

where

h = storey height;

b = width of the braced bay;

$\sum K_c$ = sum of the stiffness I/L, of the columns in that storey;

$$k_3 = \frac{h^2 \sum S_p}{80E \sum K_C} \leq 2 \text{ ; and}$$

$\sum S_p$ = Sum of spring stiffness (horizontal force per unit horizontal deflection of all the panels in that storey determined from:

$$S_p = \frac{0.6h/b}{\left[1 + (h/b)^2\right]^2}\, t_p E_p$$

where

t_p = thickness of the wall panel, and

E_p = modulus of elasticity of the panel material.

ANNEX B

[*Clauses* 11.2.2.2 (b) *and* 11.6.2]

DESIGN AGAINST FLOOR VIBRATION

B-1 GENERAL

Floor with longer spans of lighter construction and less inherent damping are vulnerable to vibrations under normal human activity. Natural frequency of the floor system corresponding to the lowest mode of vibration, damping characteristics, are important characteristics in floor vibration. Open web steel joists (trusses) or steel beams on the concrete deck may experience walking vibration problem. Fatigue, overloading of floor systems and vibrations due to rhythmic activities such as aerobic or dance classes are not within the scope of this annex.

B-2 ANNOYANCE CRITERIA

In the frequency range of 2 to 8 Hz in which people are most sensitive to vibration, the threshold level corresponds approximately to 0.5 percent g, where g is the acceleration due to gravity. Continuous vibration is generally more annoying than decaying vibration due to damping. Floor systems with the natural frequency less than 8 Hz in the case of floors supporting rhythmic activity and 5 Hz in the case of floors supporting normal human activity should be avoided.

B-3 FLOOR FREQUENCY

The fundamental natural frequency can be estimated by assuming full composite action, even in non-composite construction. This frequency, f_1 for a simply supported one way system is given by:

$$f_1 = 156\sqrt{EI_T / WL^4}$$

where

E = modulus of elasticity of steel, in MPa;

I_T = transformed moment of inertia of the one way system (in terms of equivalent steel) assuming the concrete flange of width equal to the spacing of the beam to be effective, in mm^4;

L = span length, in mm; and

W = dead load of the one way joist, in N/mm.

If the one way joist system is supported by a flexible beam running perpendicular with the natural frequency f_2, the floor frequency may be reduced to f_r, given by:

$$\frac{1}{f_r^2} = \frac{1}{f_1^2} + \frac{1}{f_2^2}$$

B-4 DAMPING

The percentage of critical damping may be assumed approximately as given below:

Sl No.	*System*	*Critical Damping* Percent
(1)	(2)	(3)
i)	Fully composite construction	2
ii)	Bare steel beam and concrete deck	3-4
iii)	Floor with finishes, false ceiling, fire proofing, ducts, furniture	6
iv)	Partitions not located along a support or not spaced farther apart than 6 m and partitions oriented in orthogonal directions	Up to 12

B-5 ACCELERATION

The peak acceleration a_o, from heel impact for floors of spans greater than 7 m and natural frequency f_1, less than 10 Hz may be calculated as:

$$a_o/g = 600 f_r / W$$

where

W = total weight of floors plus contents over the span length and equivalent floor width (b), in N;

b = $40t_s$ ($20\ t_s$ when overhang is only on one side of the beam);

t_s = equivalent thickness of the slab, averaging concrete in slab and ribs; and

g = acceleration due to gravity.

ANNEX C

(*Clause* 13.2.2)

DETERMINATION OF EFFECTIVE LENGTH OF COLUMNS

C-1 METHOD FOR DETERMINING EFFECTIVE LENGTH OF COLUMNS IN FRAMES

In the absence of a more exact analysis, the effective length of columns in framed structures may be obtained by multiplying the actual length of the column between the centres of laterally supporting members (beams) given in Fig. 27 and Fig. 28 with the effective length factor K, calculated by using the equations given below, provided the connection between beam and column is rigid type:

a) *Non-sway frames (Braced frame)* [(*see* **10.1.2** (a)]

A frame is designated as non-sway frame if the relative displacement between the two adjacent floors is restrained by bracings or shear walls (*see* **10.1.2**). The effective length factor, K, of column in non-sway frames is given by (*see* Fig. 27):

$$K = \frac{[1 + 0.145\ (\beta_1 + \beta_2) - 0.265\beta_1\beta_2]}{[2 - 0.364\ (\beta_1 + \beta_2) - 0.247\beta_1\beta_2]}$$

b) Sway frames (Moment Resisting Frames) [*see* **10.1.2** (b)]

The effective length factor K, of column in sway frames is given by (*see* Fig. 28):

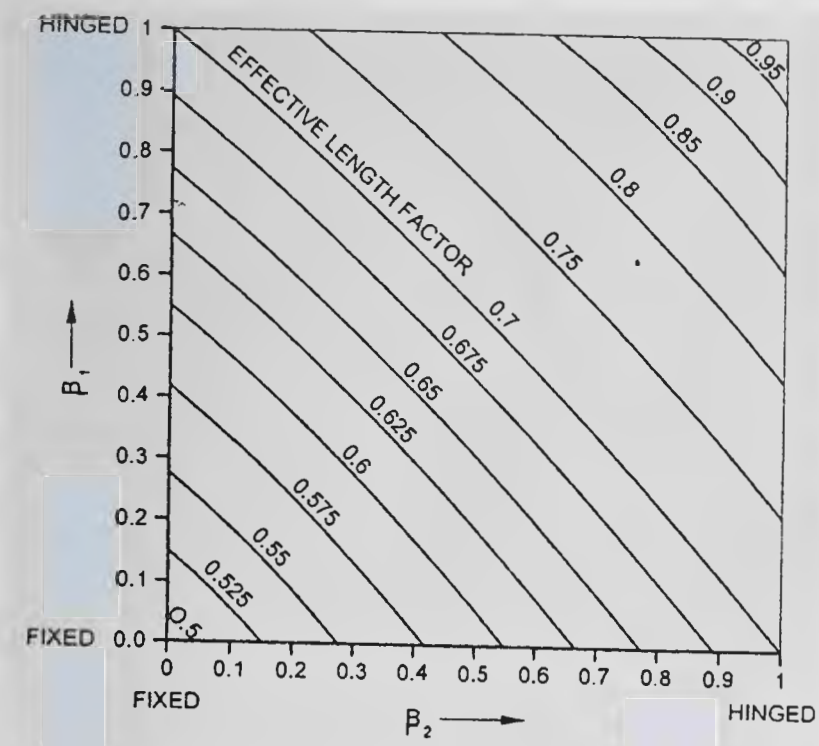

FIG. 27 COLUMN EFFECTIVE LENGTH FACTOR - NON-SWAY FRAME

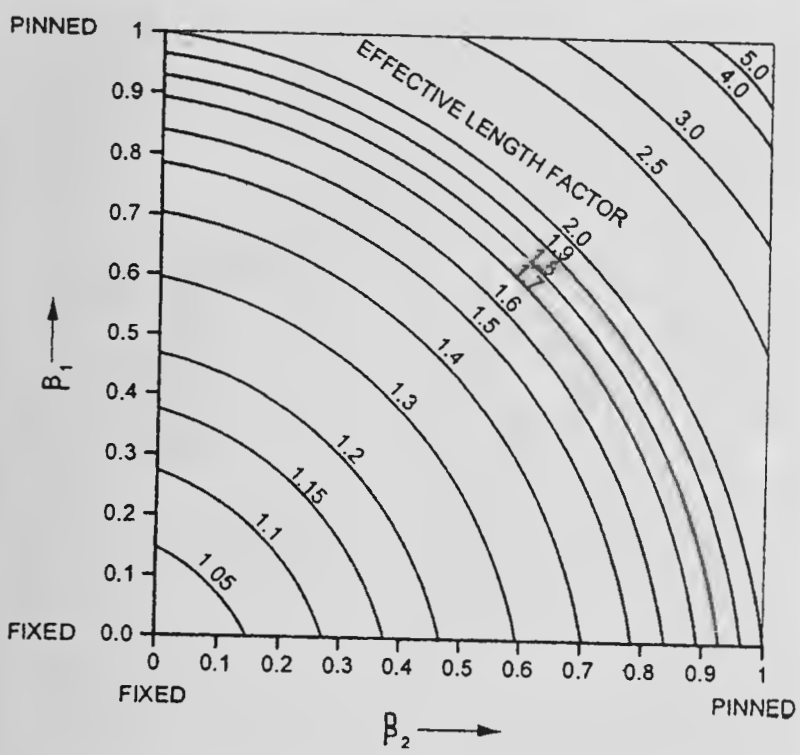

FIG. 28 COLUMN EFFECTIVE LENGTH FACTOR — SWAY FRAME

$$K = \left[\frac{1-0.2(\beta_1+\beta_2)-0.12\beta_1\beta_2}{1-0.8(\beta_1+\beta_2)+0.6\beta_1\beta_2}\right]^{0.5}$$

where

β_1, β_2 are given, $\beta = \dfrac{\sum K}{\sum K_c + \sum K_b}$

K_c, K_b = Effective flexural stiffness of the columns and beams meeting at the joint at the ends of the columns and rigidly connected at the joints, and these are calculated by:

$$K = C\,(I/L)$$

I = moment of inertia of the member about an axis perpendicular to the plan of the frame,

L = length of the member equal to centre-to-centre distance of the intersecting member, and

C = correction factor as shown in Table 35.

Table 35 Correction Factors for Effective Flexural Stiffness

(*Clause* C-1)

Sl No.	Far End Condition	Correction Factor, C	
		Braced Frame	Unbraced Frame
(1)	(2)	(3)	(4)
i)	Pinned	$1.5(1-\bar{n})$	$1.5\,(1-\bar{n})$
ii)	Rigidly connected to column	$1.0(1-\bar{n})$	$1.0\,(1-0.2\,\bar{n})$
iii)	Fixed	$2.0(1-0.4\,\bar{n})$	$0.67\,(1-0.4\,\bar{n})$

NOTE — $\bar{n} = \dfrac{P}{P_e}$

where

P_e = elastic buckling load, and

P = applied load.

C-2 METHOD FOR DETERMINING EFFECTIVE LENGTH FOR STEPPED COLUMNS (*see* 13.2.2)

C-2.1 Single Stepped Columns

Effective length in the plane of stepping (bending about axis *z-z*) for bottom and top parts for single stepped column shall be taken as given in Table 36.

NOTE — The provisions of **C-2.1** are applicable to intermediate columns as well with stepping on either side, provided appropriate values of I_1 and I_2 are taken.

C-3 EFFECTIVE LENGTH FOR DOUBLE STEPPED COLUMNS

Effective lengths in the plane of steppings (bending about axis *z-z*) for bottom, middle and top parts for a double stepped column shall be taken as follows (*see also* Fig. 29):

Coefficient K_1 for effective length of bottom part of double stepped column shall be taken from the formula:

$$K_1 = \sqrt{\frac{t_1K_1^2 + \left(t_2K_2^2 + K_3^2\right)\times(1+n_2)^2 \times \dfrac{I_1}{I'_{av}}}{1+t_1+t_2}}$$

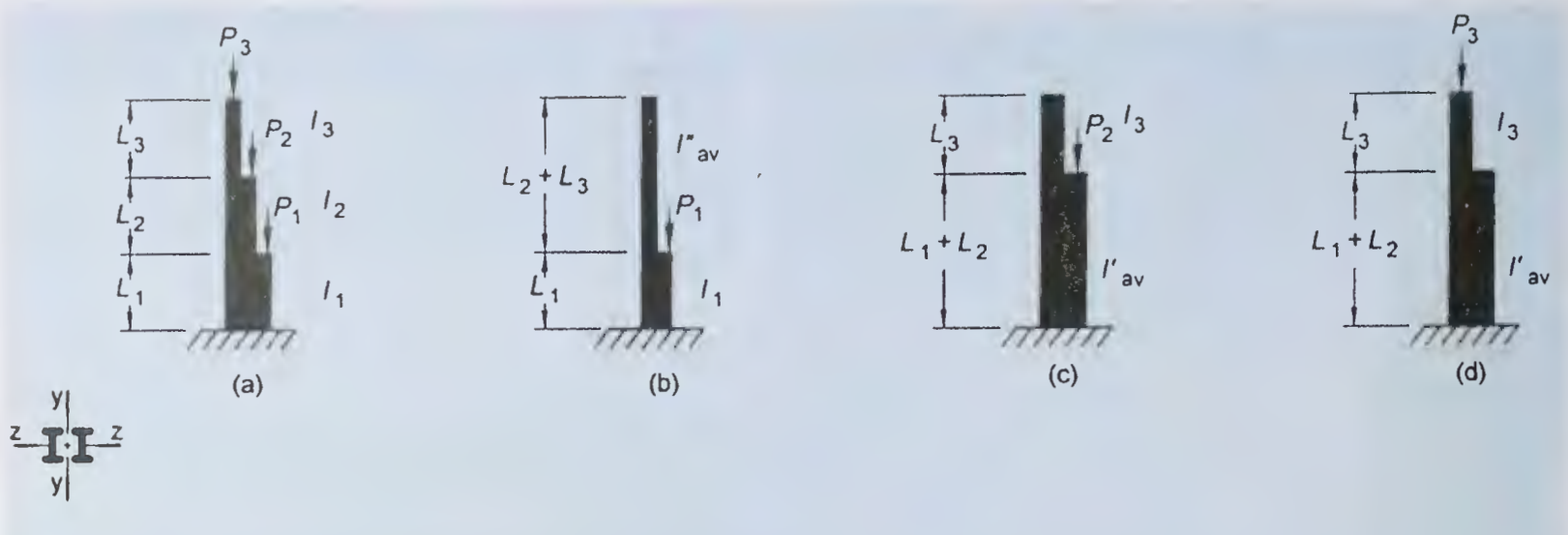

FIG. 29 EFFECTIVE LENGTH OF DOUBLE STEPPED COLUMNS

Table 36 Effective Length of Singled Stepped Columns

(*Clause* C-2.1)

Sl No.	Degree of End Restraint	Sketch	Effective Length Coefficients	Column Parameters for all Cases
(1)		(2)	(3)	(4)
i)	Effectively held in position and restrained against rotation at both ends		$K_1 = \sqrt{\frac{K_{12}^2 + K_{11}^2(\alpha - 1)}{\alpha}}$ $K_2 = \frac{K_1}{C_1} \leq 3$ where K_{12} and K_{11} are to be taken as per Table 37	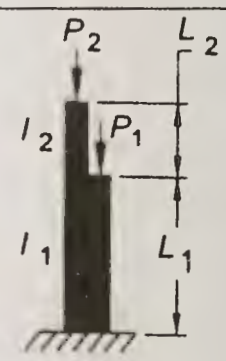 $\alpha = \frac{P_1 + P_2}{P_2}$ $C_1 = \frac{L_2}{L_1}\sqrt{\frac{I_1}{I_2 \alpha}}$ $\frac{i_2}{i_1} = \frac{I_2}{L_2} \times \frac{L_1}{I_1}$
ii)	Effectively held in position at both ends and restrained against rotation at bottom end only		$K_1 = \sqrt{\frac{K_{12}^2 + K_{11}^2(\alpha - 1)}{\alpha}}$ $K_2 = \frac{K_1}{C_1} \leq 3$ where K_{12} and K_{11} are to be taken as per Table 38	
iii)	Effectively held in position and restrained against rotation at bottom end, and top end held against rotation but not held in position		K_1 to be taken as per Table 39 $K_2 = \frac{K_1}{C_1} \leq 3$	Effective length of bottom part of column in plane of stepping $= K_1 L_1$
iv)	Effectively held in position and restrained against rotation at bottom end, and top end neither held against rotation nor held in position		K_1 to be taken as per Table 40 $K_2 = \frac{K_1}{C_1} \leq 3$	Effective length of top part of column in plane of stepping $= K_2 L_2$

Table 37 Coefficients of Effective Lengths K_{12} and K_{11} for Columns with Both Ends Effectively Held in Position and Restrained Against Rotation

(*Table* 36)

I_2/I_1	Coefficients K_{12} and K_{11} for L_2/L_1 Equal to														
	0.1	0.2	0.3	0.4	0.5	0.6	0.7	0.8	0.9	1.0	1.2	1.4	1.6	1.8	2.0
	Coefficient K_{12} ($P_1 = 0$)														
0.05	0.74	0.94	1.38	1.60	1.87	2.07	2.23	2.39	2.52	2.67	3.03	3.44	3.85	4.34	4.77
0.1	0.67	0.76	1.00	1.20	1.42	1.61	1.78	1.92	2.04	2.20	2.40	2.60	2.86	3.18	3.41
0.2	0.64	0.70	0.79	0.93	1.07	1.23	1.41	1.50	1.60	1.72	1.92	2.11	2.28	2.45	2.64
0.3	0.62	0.68	0.74	0.85	0.95	1.06	1.18	1.28	1.39	1.48	1.67	1.82	1.96	2.12	2.20
0.4	0.60	0.66	0.71	0.77	0.82	0.93	0.99	1.08	1.17	1.23	1.39	1.53	1.66	1.79	1.92
0.5	0.59	0.65	0.70	0.77	0.82	0.93	0.99	1.08	1.17	1.23	1.39	1.53	1.66	1.79	1.92
1.0	0.55	0.60	0.65	0.70	0.75	0.80	0.85	0.90	0.95	1.00	1.10	1.20	1.30	1.40	1.50
	Coefficient K_{11} ($P_2 = 0$)														
0.05	0.65	0.67	0.71	0.85	1.01	1.17	1.31	1.41	1.50	1.57	1.67	1.74	1.78	1.82	1.86
0.1	0.64	0.65	0.65	0.65	0.78	0.92	1.05	1.15	1.25	1.33	1.45	1.55	1.62	1.68	1.71
0.2	0.62	0.64	0.65	0.65	0.66	0.73	0.83	0.92	1.01	1.09	1.23	1.33	1.41	1.48	1.54
0.3	0.60	0.63	0.64	0.65	0.66	0.67	0.73	0.81	0.89	0.94	1.09	1.20	1.28	1.35	1.41
0.4	0.58	0.63	0.63	0.64	0.64	0.66	0.68	0.75	0.82	0.88	1.01	1.10	1.19	1.26	1.32
0.5	0.57	0.61	0.63	0.64	0.64	0.65	0.68	0.72	0.77	0.83	0.94	1.04	1.12	1.19	1.25
1.0	0.55	0.58	0.60	0.61	0.62	0.63	0.65	0.67	0.70	0.73	0.80	0.88	0.93	1.01	1.05

NOTE — Intermediate value may be obtained by interpolation

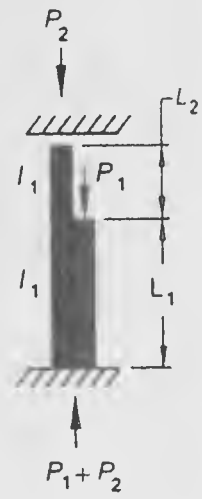

Table 38 Coefficients of Effective Lengths K_{12} and K_{11} for Columns with Both Ends Effectively Held in Position and Restrained Against Rotation at Bottom End Only

(*Table* 36)

I_2/I_1	Coefficients K_{12} and K_{11} for L_2/L_1 Equal to														
	0.1	0.2	0.3	0.4	0.5	0.6	0.7	0.8	0.9	1.0	1.2	1.4	1.6	1.8	2.0
	Coefficient K_{12} ($P_1 = 0$)														
0.05	0.97	1.66	2.10	2.43	2.72	2.92	3.08	3.24	3.48	3.73	4.22	4.85	5.36	6.00	6.58
0.1	0.83	1.21	1.57	1.95	2.14	2.33	2.46	2.60	2.76	2.91	3.28	3.61	4.03	4.43	4.85
0.3	0.78	0.90	1.09	1.27	1.44	1.60	1.74	1.86	1.98	2.11	2.35	2.51	2.76	2.99	3.25
0.5	0.78	0.86	0.99	1.10	1.22	1.35	1.47	1.57	1.67	1.76	1.96	2.15	2.34	2.50	2.76
1.0	0.78	0.85	0.92	0.99	1.06	1.13	1.20	1.27	1.34	1.41	1.54	1.68	1.82	1.97	2.10
	Coefficient K_{11} ($P_2 = 0$)														
0.05	0.67	0.67	0.82	1.16	1.35	1.48	1.58	1.65	1.69	1.74	1.81	1.84	1.86	1.88	1.90
0.1	0.67	0.67	0.73	0.93	1.11	1.25	1.36	1.45	1.52	1.57	1.66	1.72	1.77	1.80	1.82
0.3	0.67	0.67	0.67	0.71	0.80	0.90	0.99	1.08	1.15	1.22	1.33	1.41	1.48	1.54	1.59
0.5	0.67	0.67	0.67	0.69	0.73	0.81	0.87	0.94	1.01	1.07	1.17	1.26	1.33	1.39	1.44
1.0	0.67	0.67	0.67	0.68	0.71	0.74	0.78	0.82	0.87	0.91	0.99	1.07	1.13	1.19	1.24

NOTE — Intermediate value may be obtained by interpolation

Table 39 Coefficients of Effective Lengths K_1 for Columns Effectively Held in Position and Restrained Against Rotation at Bottom End and Top End Held Against Rotation but not Held in Position

(*Table* 36)

C_1	Coefficients K_1 for I_2/I_1 Equal to														
	0.1	**0.2**	**0.3**	**0.4**	**0.5**	**0.6**	**0.7**	**0.8**	**0.9**	**1.0**	**1.2**	**1.4**	**1.6**	**1.8**	**2.0**
0	2.0	1.8	1.7	1.67	1.6	1.55	1.50	1.4	1.43	1.4	1.37	1.3	1.1	1.10	1.0
0.5	2.0	1.9	1.8	1.74	1.6	1.65	1.61	1.5	1.55	1.5	—	—	—	—	—
1.0	2.0	2.0	2.0	2.00	2.0	2.00	—	—	—	—	—	—	—	—	—
1.5	2.0	2.2	2.3	2.48	—	—	—	—	—	—	—	—	—	—	—
2.0	2.0	2.6	2.9	—	—	—	—	—	—	—	—	—	—	—	—
2.5	2.5	3.1	3.5	—	—	—	—	—	—	—	—	—	—	—	—
3.0	3.0	3.7	4.1	—	—	—	—	—	—	—	—	—	—	—	—

NOTE — Intermediate value may be obtained by interpolation

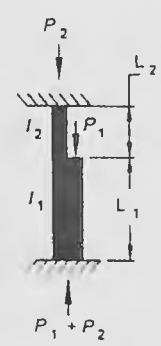

Table 40 Coefficients of Effective Lengths K_1 for Columns with Top Ends Free and Bottom End Effectively Held in Position and Restrained Against Rotation

(*Table* 36)

C_1	Coefficients K_1 for I_2/I_1 Equal to														
	0.1	0.2	0.4	0.6	0.8	1.0	1.2	1.4	1.6	1.8	2.0	2.5	5.0	10	20
0	2.0	2.0	2.0	2.0	2.0	2.0	2.0	2.0	2.0	2.0	2.0	2.0	2.0	2.0	2.0
0.5	2.0	2.14	2.24	2.36	2.47	2.57	2.67	2.76	2.85	2.94	3.02	—	—	—	—
1.0	2.0	2.73	3.13	3.44	3.74	4.00	—	—	—	—	—	—	—	—	—
1.5	3.0	3.77	4.35	4.86	—	—	—	—	—	—	—	—	—	—	—
2.0	4.0	4.90	5.67	—	—	—	—	—	—	—	—	—	—	—	—
2.5	5.0	6.08	7.00	—	—	—	—	—	—	—	—	—	—	—	—
3.0	6.0	7.25	—	—	—	—	—	—	—	—	—	—	—	—	—

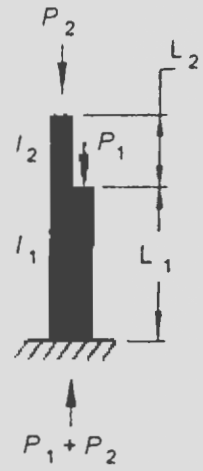

NOTE — Intermediate value may be obtained by interpolation

Table 41 Values of K_1, K_2 and K_3

(*Clause* C-3)

Sl No.	Degree of End Restraint	Sketch	K_1	K_2	K_3	Column Parameters for all Cases
(1)	(2)	(3)	(4)	(5)	(6)	(7)
i)	Effectively held in position and restrained against rotation at both ends		$K_1 = K_{11}$ where K_{11} is taken from Table 37	$K_2 = K_{11}$ where K_{11} is taken from Table 37	$K_3 = K_{12}$ where K_{12} is taken from Table 37	
ii)	Effectively held in position at both ends and restrained against rotation at bottom end only		$K_1 = K_{11}$ where K_{11} is taken from Table 38	$K_2 = K_{11}$ where K_{11} is taken from Table 38	$K_3 = K_{12}$ where K_{12} is taken from Table 38	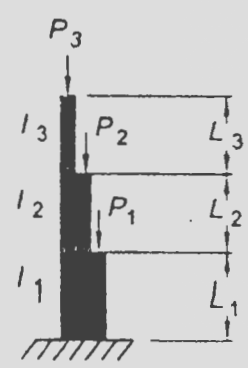
iii)	Effectively held in position and restrained against rotation at bottom end, and top end held against rotation but not held in position		$K_1 = K_1$ where K_1 is taken from Table 39 with C_1=0	$K_2 = K_1$ where K_1 is taken from Table 39 with C_1=0	$K_3 = K_1$ where K_1 is taken from Table 39 with $C_1 = \frac{L_3}{L_1 + L_2}\sqrt{\frac{I_{av}}{I_3}}$	
iv)	Effectively held in position and restrained against rotation at bottom end, and top end neither held against rotation nor against translation		$K_1 = 2$	$K_2 = 2$	$K_3 = K_1$ where K_1 is taken from Table 40 with $C_1 = \frac{L_3}{L_1 + L_2}\sqrt{\frac{I_{av}}{I_3}}$	

where

K_1, K_2, and K_3 are taken from Table 41.

$$t_1 = \frac{P_1}{P_3},\ t_2 = \frac{P_2}{P_3},\ n_2 = \frac{L_2}{L_1}$$

I'_{av} = average value of moment of inertia for the lower and middle parts

$$= \frac{I_1 L_1 + I_2 L_2}{L_1 + L_2}$$

I''_{av} = average value of moment of inertia for the middle and top parts

$$= \frac{I_2 L_2 + I_3 L_3}{L_2 + L_3}$$

Value of coefficient K_2 for middle part of column is given by formula:

$$K_2 = \frac{K_1}{C_2}, \text{ and}$$

Value of coefficient K_3 for the top part of the column is given by:

$$K_3 = \frac{K_1}{C_3} \leq 3$$

where

$$C_2 = \frac{L_2}{L_1}\sqrt{\frac{I_1(P_2+P_3)}{I_2(P_1+P_2+P_3)}},\ C_3 = \frac{L_3}{L_1}\sqrt{\frac{I_1 P_3}{I_3(P_1+P_2+P_3)}}$$

NOTE — The provisions of **C-3.1** are applicable to intermediate columns as well with steppings on either side, provided appropriate values of I_1, I_2 and I_3 are taken.

ANNEX D

(*Clause* 14.2.2.1)

ELASTIC LATERAL TORSIONAL BUCKLING

D-1 ELASTIC CRITICAL MOMENT

D-1.1 General

The elastic critical moment is affected by the following:

a) Moment gradient in the unsupported length,
b) Boundary conditions at the lateral support points,
c) Non-symmetric and non-prismatic nature of the member, and
d) Location of transverse load with respect to shear centre.

The boundary conditions at the lateral supports have two components:

1) *Torsional restraint* — where the cross-section is prevented from rotation about the shear centre, and
2) *Warping restraint* — where the flanges are prevented from rotating in their own plane about an axis perpendicular to the flange.

The elastic critical moment corresponding to lateral torsional buckling of a doubly symmetric prismatic beam subjected to uniform moment in the unsupported length and torsionally restraining lateral supports is given by:

$$M_{cr} = \frac{\pi^2 E I_y}{(L_{LT})^2}\left[\frac{I_w}{I_y} + \frac{G I_t (L_{LT})^2}{\pi^2 E I_y}\right]^{0.5}$$

where

I_y, I_w, I_t = moment of inertia about the minor axis, warping constant and St.Venant's torsion constant of the cross-section, respectively (*see* Annex G for properties of sections);

G = modulus of rigidity; and

L_{LT} = effective length against lateral torsional buckling (*see* **14.3**).

This equation in simplified form for I-section has been presented in **14.2.2.1**.

While the simplified equation is generally on the safe side, there are many situations where this may be very conservative. More accurate calculation of the elastic critical moment for general case of unsymmetrical sections, loading away from shear centre and beams with moment gradient can be obtained from specialist literature, by using an appropriate computer program or equations given below.

D-1.2 Elastic Critical Moment of a Section Symmetrical About Minor Axis

In case of a beam which is symmetrical only about the minor axis, and bending about major axis, the elastic critical moment for lateral torsional buckling is given by the general equation below,

$$M_{cr} = c_1 \frac{\pi^2 E I_y}{(L_{LT})^2} \left\{ \left[\left(\frac{K}{K_w} \right)^2 \frac{I_w}{I_y} + \frac{G I_t (L_{LT})^2}{\pi^2 E I_y} + \left(c_2 y_g - c_3 y_j \right)^2 \right]^{0.5} - \left(c_2 y_g - c_3 y_j \right) \right\}$$

where

c_1, c_2, c_3 = factors depending upon the loading and end restraint conditions (*see* Table 42);

K = effective length factors of the unsupported length accounting for boundary conditions at the end lateral supports. The effective length factor K varies from 0.5 for complete restraint against rotation about weak axis to 1.0 for free rotate about weak axis, with 0.7 for the case of one end fixed and other end free. It is analogous to the effective length factors for compression members with end rotational restraint;

K_w = warping restraint factor. Unless special provisions to restrain warping of the section at the end lateral supports are made, K_w should be taken as 1.0;

y_g = distance between the point of application of the load and the shear centre of the cross-section and is positive when the load is acting towards the shear centre from the point of application;

y_j = $y_s - 0.5 \int_A \left(z^2 + y^2 \right)^2 y dA / I_z$

y_s = coordinate of the shear centre with respect to centroid, positive when the shear centre is on the compression side of the centroid; and

y, z = coordinates of the elemental area with respect to centroid of the section.

y_j can be calculated by using the following approximation:

a) *Plain flanges*:

$y_j = 0.8\ (2\beta_f - 1)\ h_y/2.0$ (when $\beta_f > 0.5$)

$y_j = 1.0\ (2\beta_f - 1)\ h_y/2.0$ (when $\beta_f \leq 0.5$)

b) *Lipped flanges*:

$y_j = 0.8\ (2\beta_f - 1)(1 + h_L/h) h_y/2$ (when $\beta_f > 0.5$)

$y_j = (2\beta_f - 1)\ (1 + h_L/h)\ h_y/2$ (when $\beta_f \leq 0.5$)

where

h_L = height of the lip,

h = overall height of the section,

h_y = distance between shear centre of the two flanges of the cross-section, and

β_f = $I_{fc}/(I_{fc} + I_{ft})$ where I_{fc}, I_{ft} are the moment of inertia of the compression and tension flanges, respectively, about the minor axis of the entire section.

I_t = St. Venant's Torsion constant, given by:

$I_t = \Sigma b_i t_i^3 / 3$ (for open section)

$= 4 A_e^2 / \Sigma (b/t)$ (for hollow section)

where

A_e = area enclosed by the section, and

b, t = breadth and thickness of the elements of the section, respectively.

I_w = The warping constant, given by:

$(1-\beta_f)\ \beta_f\ I_y\ h_y^2$ (for I-sections mono-symmetric about weak axis)

= 0 (for angle, Tee, narrow rectangle section and approximately for hollow sections)

Table 42 Constants c_1, c_2, and c_3

(Clause D-1.2)

Loading and Support Conditions (1)	Bending Moment Diagram (2)	Value of K (3)	Constants c_1 (4)	c_2 (5)	c_3 (6)
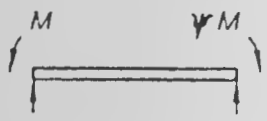	$\psi = +1$	1.0	1.000		1.000
		0.7	1.066	—	1.113
		0.5	1.088		1.144
	$\psi = +3/4$	1.0	1.141		0.992
		0.7	1.270	—	1.565
		0.5	1.395		2.183
	$\psi = +1/2$	1.0	1.323		0.992
		0.7	1.473	—	1.556
		0.5	1.514		2.271
	$\psi = +1/4$	1.0	1.563		0.977
		0.7	1.739	—	1.531
		0.5	1.788		2.235
	$\psi = 0$	1.0	1.879		0.939
		0.7	2.092	—	1.473
		0.5	2.150		2.150
	$\psi = -1/4$	1.0	2.281		0.855
		0.7	2.533	—	1.345
		0.5	2.609		1.957
	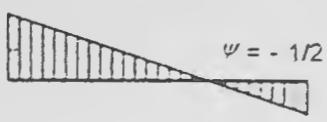 $\psi = -1/2$	1.0	2.704		0.676
		0.7	3.009	—	1.059
		0.5	3.093		1.546
	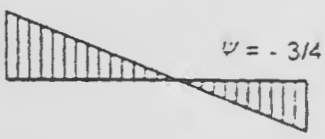 $\psi = -3/4$	1.0	2.927		0.366
		0.7	3.009	—	0.575
		0.5	3.093		0.837
	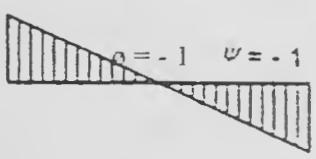 $\theta = -1$ $\psi = -1$	1.0	2.752		0.000
		0.7	3.063	—	0.000
		0.5	3.149		0.000
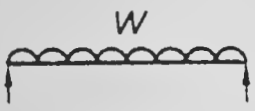	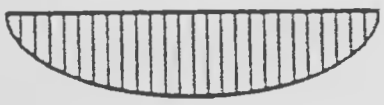	1.0	1.132	0.459	0.525
		0.5	0.972	0.304	0.957
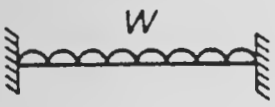		1.0	1.285	1.562	0.753
		0.5	0.712	0.652	1.070
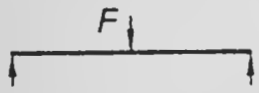		1.0	1.365	0.553	1.730
		0.5	1.070	0.432	3.050
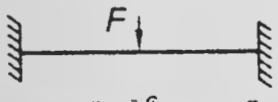		1.0	1.565	1.257	2.640
		0.5	0.938	0.715	4.380
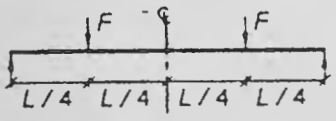		1.0	1.046	0.430	1.120
		0.5	1.010	0.411	1.890

ANNEX E

(*Clause* 16.6.1)

CONNECTIONS

E-1 GENERAL

The requirement for the design of splice and beam to column connection as well as recommendation for their design shall be as given below.

E-2 BEAM SPLICES

E-2.1 For rolled section beam splices located away from the point of maximum moment, it may be assumed that the flange splice carries all the moment and the web splice carries the shear (*see* Fig. 30). However, in the case of a deep girder, the total moment may be divided between the flange and the web in accordance with the stress distribution. The web connection should then be designed to resist its share of moment and shear. Even web splice is designed to carry only shear force, the moment about the centroid of the bolt group on either side of the splice should be designed for moment due to eccentricity.

E-2.2 Flange joints should preferably not be located at points of maximum stress. Where splice plates are used, their area shall not be less than 5 percent in excess of the area of the flange element spliced; and their centre of gravity shall coincide, as nearly as possible with that of the element spliced. There shall be enough fasteners on each side of the splice to develop the load in the element spliced plus 5 percent but in no case should the strength developed be less than 50 percent of the effective strength of the material spliced. Wherever possible in welded construction, flange plates shall be joined by complete penetration butt welds. These butt welds shall develop the full strength of the plates. Whenever the flange width or thickness changes at the splice location, gradual transition shall be made in the width/thickness of the larger flange.

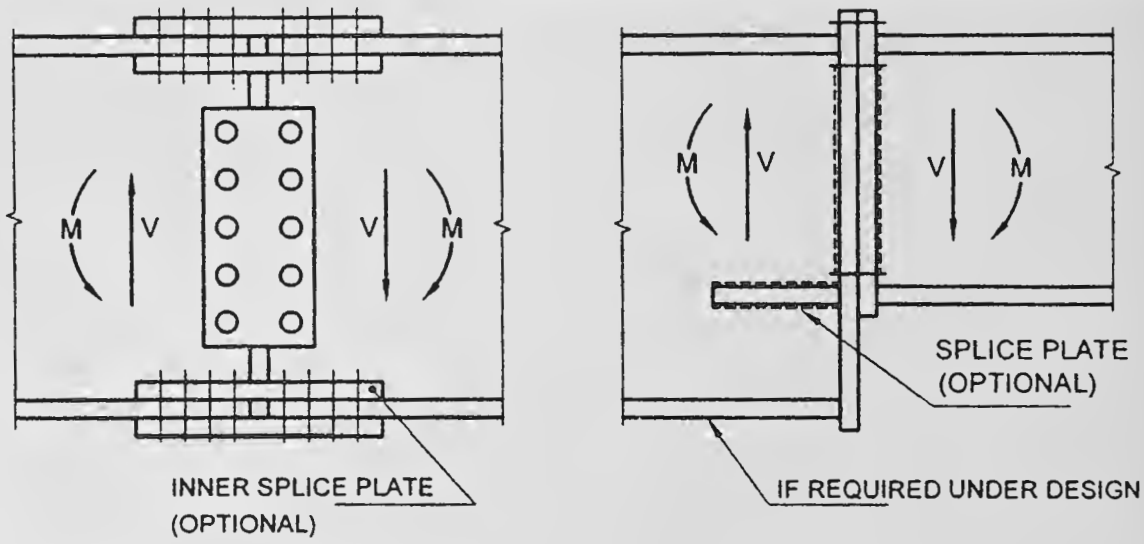

30A Conventional Splice (Typical)

30B End Plate Splice

FIG. 30 BEAM SPLICES

E-2.3 When beam splice is located at the point of inflection of a continuous beam, the flange splicing requirement given above may be relaxed appropriately.

E-3 COLUMN SPLICE

E-3.1 Where the ends of compression members are faced for bearing over the whole area, they shall be spliced to hold the connected parts aligned. The ends of compression members faced for bearing shall invariably be machined to ensure perfect contact of surfaces in bearing (*see* Fig. 31).

E-3.2 Where such members are not faced for complete bearing the splices shall be designed to transmit all the forces to which the members is subjected at the splice location.

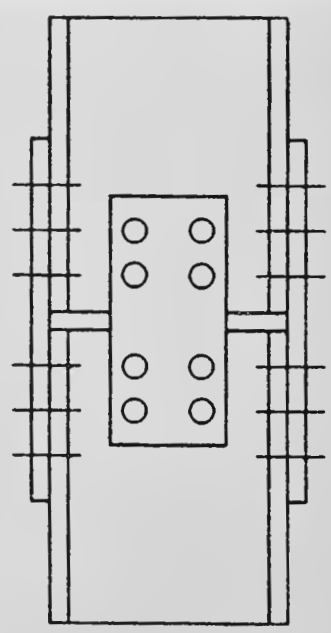

FIG. 31 COLUMN SPLICE (TYPICAL)

E-3.3 Wherever possible, splices shall be proportioned and arranged so that centroidal axis of the splice coincides as nearly as possible with the centroidal axes of the members joined, in order to avoid eccentricity; but where eccentricity is present in the joint, the resulting stress considering eccentricity shall be provided for.

E-3.4 If a column flange is subjected to significant tension or if the faces are not prepared for bearing, or if full continuity is required without slip, only HSFG bolts shall be used.

E-4 BEAM-TO-COLUMN CONNECTIONS

E-4.1 Simple Connections

Simple connections are assumed to transfer only shear at some nominal eccentricity and typically used in frames up to about five stories in height, where strength rather than stiffness govern the design. In such frames separate lateral load resisting system is to be provided in the form of bracings or shear walls. The connections shown in Figs. 32A, 32B, 32C and 32D can be assumed as simple connections in framed analysis and need to be checked only for the transfer of shear from beam to column.

E-4.2 Rigid Connections

In high-rise and slender structures, stiffness requirements may warrant the use of rigid connections. Rigid connections transfer significant moments to the columns and are assumed to undergo negligible deformations at the joint. These are necessary in sway frames for stability and also contribute in resisting lateral loads. The connections shown in Figs. 32E, 32F, and 32G can be assumed as rigid connection in frame analysis and need to be checked for both shear and

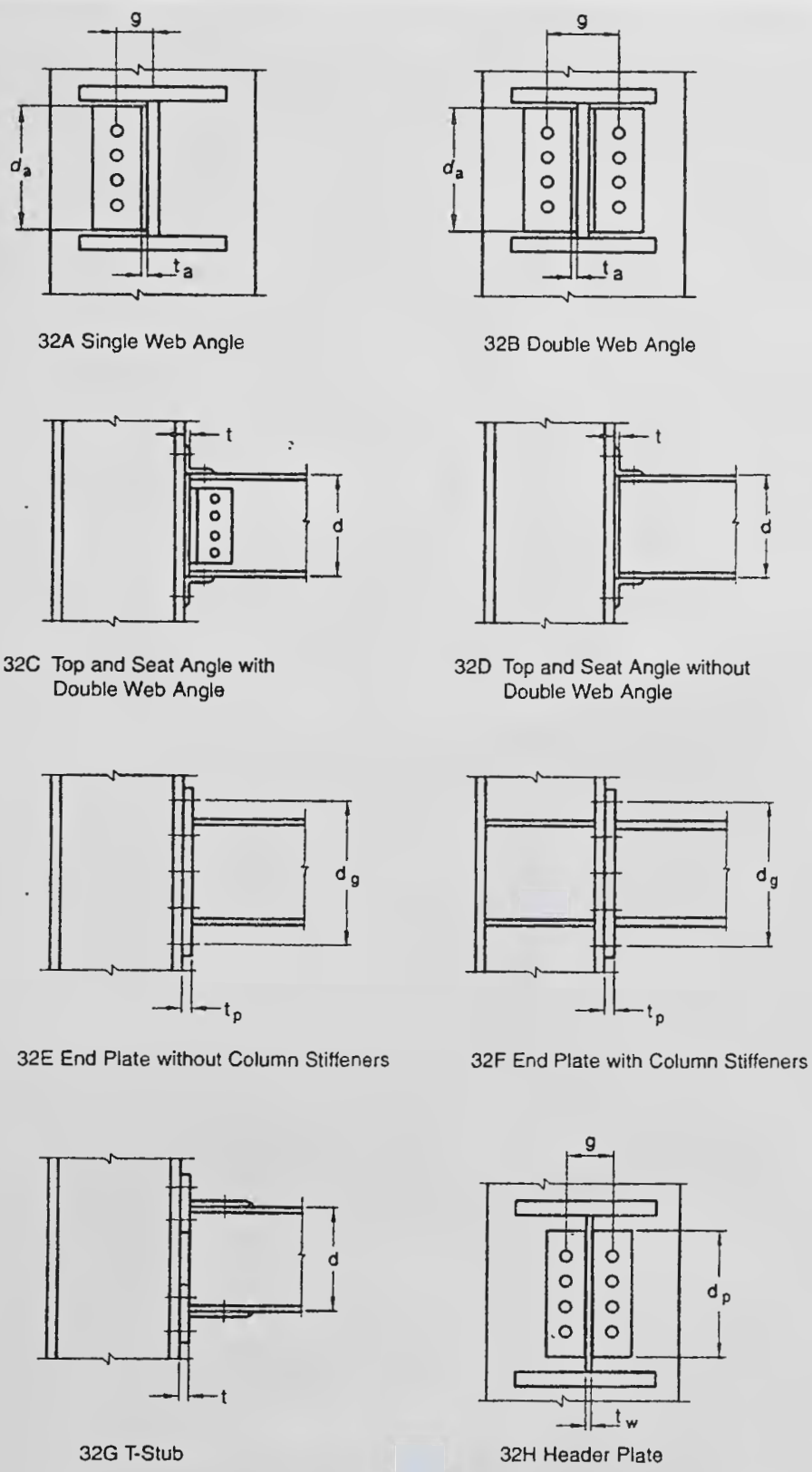

FIG. 32 SIZE PARAMETER FOR VARIOUS TYPES OF CONNECTION

moment transfer from beam to the column. Fully welded connections can also be considered as rigid beam to column connections.

E-4.3 Semi-Rigid Connections

Semi-rigid connections fall between the two types mentioned above. The fact is that simple connections do have some degree of rotational rigidity as in the semi-rigid connections. Similarly rigid connections do experience some degree of joint deformation and this can be utilized to reduce the joint design moments.

The moment-rotation relationship of the connections have to be determined based on experiments conducted for the specific design or based on the relationship derived from tests, presented in specialist literature. The simplest method of analysis will be to idealize the connection as an equivalent rotational spring with either a bilinear or non-linear moment-rotation characteristics. The classification proposed by Bjorhovde combined with the Frye-Morris model can be used with convenience to model semi-rigid connections, as given in the next section.

E-4.3.1 *Connection Classification*

Connections are,classified according to their ultimate strength or in terms of their initial elastic stiffness and Bjorhovde's classification. It is based on the non-dimensional moment parameter ($m^1 = M_u / M_{pb}$) and the non-dimensional rotation parameter ($\theta^1 = \theta_r/\theta_p$), where θ_p is the plastic rotation. The Bjorhovde's classification is based on a reference length of the beam equal to 5 times the depth of the beam. The limits used for connection classification are shown in Table 43 and are graphically represented in Fig. 33.

E-4.3.2 *Connection Models*

Frye-Morris has derived the following polynomial model for the moment curvature relationship of semi-rigid connections:

$$\theta_r = C_1(KM)^1 + C_2 (KM)^3 + C_3 (KM)^5$$

where

M = moment at the joint, in kN.m;

K = standardization parameter which depend on the connection type and geometry; and

C_1, C_2, C_3 = curve fitting constants.

Table 44 shows the curve fitting constants and standardization constants for Frye-Morris Model [All size parameters in the table are in mm (*see* Fig. 32)].

Table 43 Connection Classification Limits

(*Clause* E-4.3.1)

Sl No. (1)	Nature of the Connection (2)	In Terms of Strength (3)	In Terms of Stiffness (4)
i)	Rigid connection	$m^1 \geq 0.7$	$m^1 \geq 2.5\ \theta^1$
ii)	Semi-rigid connection	$0.7 > m^1 > 0.2$	$2.5\theta^1 > m^1 > 0.5\theta^1$
iii)	Flexible connection	$m^1 \leq 0.2$	$m^1 \leq 0.5\ \theta^1$

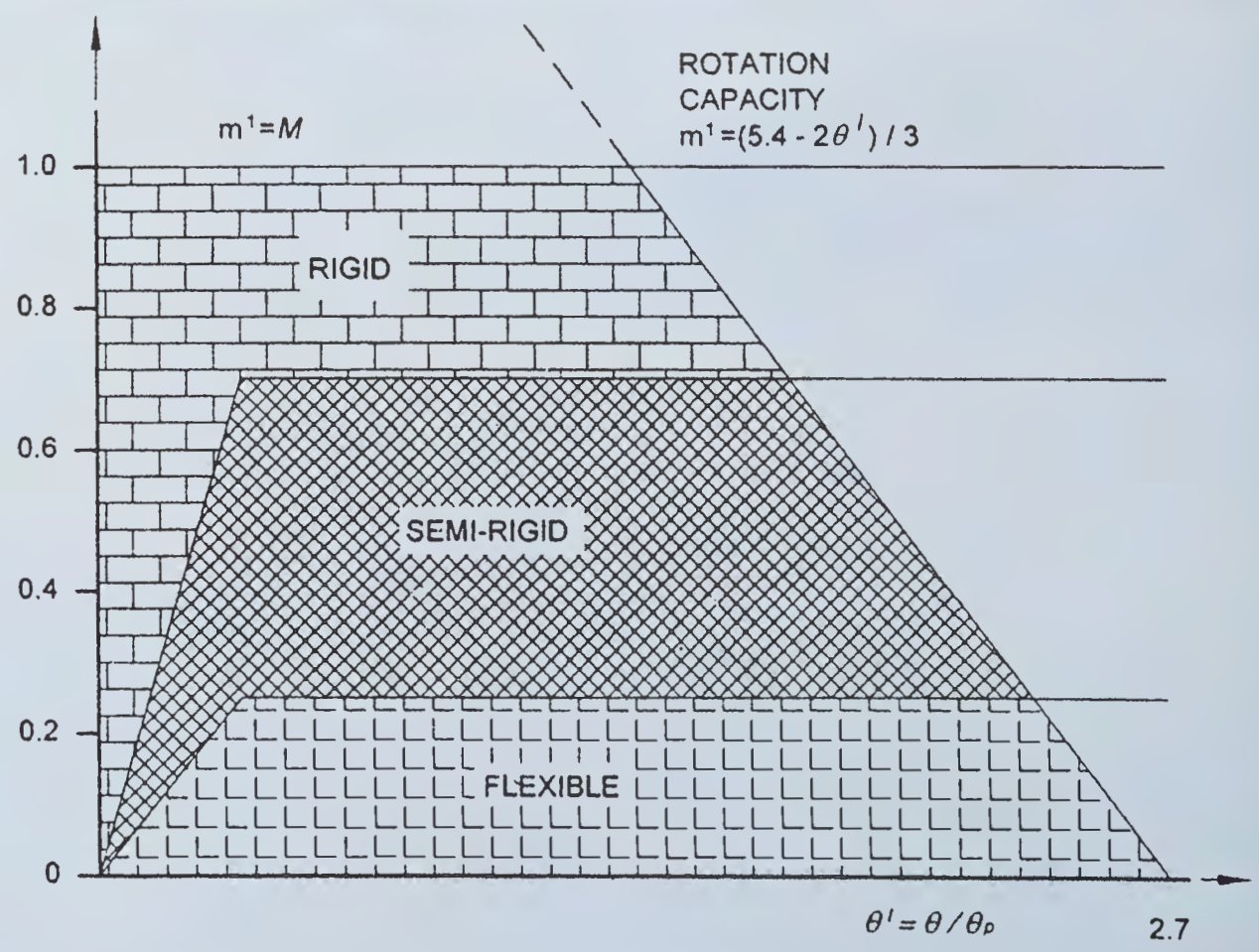

FIG. 33 CLASSIFICATION OF CONNECTIONS ACCORDING TO BJORHOVDE

Table 44 Connection Constants in Frye-Morris Model

(*Clause* E-4.3.2 *and* Fig. 32)

Sl No. (1)	Type (2)	Connection Type (3)	Curve-Fitting Constants (4)	Standardization Constants (5)
i)	A	Single web angle connection	$C_1 = 1.91 \times 10^4$ $C_2 = 1.30 \times 10^{11}$ $C_3 = 2.70 \times 10^{17}$	$K = d_a^{-2.4} t_c^{-1.81} g^{0.15}$
ii)	B	Double web angle connection	$C_1 = 1.64 \times 10^3$ $C_2 = 1.03 \times 10^{14}$ $C_3 = 8.18 \times 10^{25}$	$K = d_a^{-2.4} t_c^{-1.81} g^{0.15}$
iii)	C	Top and seat angle connection with double web angle	$C_1 = 2.24 \times 10^{-1}$ $C_2 = 1.86 \times 10^4$ $C_3 = 3.23 \times 10^8$	$K = d^{-1.287} t_a^{-1.128} t_c^{-0.415}$ $l_a^{-0.694} (g - 0.5 d_b)^{1.35}$
iv)	D	Top and seat angle connection without double web angle	$C_1 = 1.63 \times 10^3$ $C_2 = 7.25 \times 10^{14}$ $C_3 = 3.31 \times 10^{23}$	$K = d^{-1.5} t_a^{-0.5} l_a^{-0.7} d_b^{-1.1}$
v)	E	End plate connection without column stiffeners	$C_1 = 1.78 \times 10^4$ $C_2 = -9.55 \times 10^{16}$ $C_3 = 5.54 \times 10^{29}$	$K = d_g^{-2.4} t_p^{-0.4} t_f^{-1.5}$
vi)	F	End plate connection with column stiffeners	$C_1 = 2.60 \times 10^2$ $C_2 = 5.37 \times 10^{11}$ $C_3 = 1.31 \times 10^{22}$	$K = d_g^{-2.4} t_p^{-0.6}$
vii)	G	T-stub connection	$C_1 = 4.05 \times 10^2$ $C_2 = 4.45 \times 10^{13}$ $C_3 = -2.03 \times 10^{23}$	$K = d^{-1.5} t_f^{-0.5} l_t^{-0.7} d_b^{-1.1}$
viii)	H	Header-plate connection	$C_1 = 3.87$ $C_2 = 2.71 \times 10^5$ $C_3 = 6.06 \times 10^{11}$	$K = t_p^{-1.6} g^{1.6} d_b^{-2.3} t_w^{-0.5}$

where

d = depth of beam, in mm.
d_a = depth of the angle, in mm.
d_b = diameter of the bolt, in mm.
d_g = center to center of the outermost bolt of the end plate connection, in mm.
g = gauge distance of bolt line, in mm.
t_a = thickness of the top angle, in mm.
t_c = thickness of the web angle, in mm.
t_f = thickness of flange T-stub connector, in mm.
t_w = thickness of web of the beam in the connection, in mm.
t_p = thickness of end plate, header plate, in mm.
l_a = length of the angle, in mm.
l_t = length of the T-stub connector, in mm.

NOTE — For preliminary analysis using a bilinear moment curvature relationship, the stiffness given in Table 45 may be assumed depending on the type of connection. The values are based on the secant stiffness at a rotation of 0.01 radian and typical dimension of connecting angle and other components as given in the table.

Table 45 Secant Stiffness

(*Table* 42)

Sl No. (1)	Type of Connection (2)	Dimension mm (3)	Secant Stiffness kNm/radian (4)
i)	Single web connection angle	$d_a = 250$, $t_a = 10$, $g = 35$	1 150
ii)	Double web-angle connection	$d_a = 250$, $t_a = 10$, $g = 77.5$	4 450
iii)	Top and seat angle connection without double web angle connection	$d_a = 300$, $t_a = 10$, $l_a = 140$, $d_b = 20$	2 730
iv)	Header plate	$d_p = 175$, $t_p = 10$, $g = 75$, $t_w = 7.5$	2 300

E-5 COLUMN BASES

E-5.1 Base Plates

Columns shall be provided with base plates capable of distributing the compressive forces in the compressed parts of the column over a bearing area such that the bearing pressure on the foundation does not exceed the design strength of the point. The design strength of the joint between the base plate and the foundation shall be determined taking account of the material properties and dimensions of both the grout and the concrete foundation.

E-5.2 Holding Down Bolts (Anchor Bolts)

E-5.2.1 Holding down bolts shall be provided, if

necessary to resist the effects of the design loads. They shall be designed to resist tension due to uplift forces and tension due to bending moments as appropriate.

E-5.2.2 When calculating the tension forces due to bending moments, the lever arm shall not be taken as more than the distance between the centroid of the bearing area on the compression side and the centroid of the bolt group on the tension side, taking the tolerances on the positions of the holding down bolts into account.

E-5.2.3 Holding down bolts shall either be anchored into the foundation by a hook or by a washer plate or by some other appropriate load distributing member embedded in the concrete.

E-5.2.4 If no special elements for resisting the shear force are provided, such as block or bar shear connectors, it shall be demonstrated that sufficient resistance to transfer the shear force between the column and the foundation is provided by one of the following:

a) Frictional resistance of the joint between the base plate and the foundation.

b) Shear resistance of the holding down bolts.

c) Shear resistance of the surrounding part of the foundation.

d) Shear and bearing resistance of the shear key plates welded to the base plate and embedded in the pedestal/foundation.

ANNEX F

(*Clause* 23.16)

GENERAL RECOMMENDATIONS FOR STEELWORK TENDERS AND CONTRACTS

F-1 GENERAL

F-1.1 The recommendations given in this annex are in line with those generally adopted for steelwork construction and are meant for general information.

F-1.2 These recommendations do not form part of the requirements of the Section and compliance with these is not necessary for the purpose of complying with this Section.

F-1.3 The recommendations are unsuitable for inclusion as a block requirement in a contract, but in drawing up a contract the points mentioned should be given consideration.

F-2 EXCHANGE OF INFORMATION

Before the steelwork design is commenced, the building designer should be satisfied that the planning of the building, its dimensions and other principal factors meet the requirements of the building owner and comply with regulations of all authorities concerned. Collaboration of building designer and steelwork designer should begin at the outset of the project by joint consideration of the planning and of such questions as the stanchion spacing, materials to be used for the construction, and depth of basement.

F-3 INFORMATION REQUIRED BY THE STEELWORK DESIGNER

F-3.1 General

a) Site plans showing in plan and elevation of the proposed location and main dimensions of the building or structure;

b) Ground levels, existing and proposed;

c) Particulars of buildings or other constructions which may have to remain on the actual site of the new building or structure during the erection of the steelwork;

d) Particulars of adjacent buildings affecting, or affected by, the new work;

e) Stipulation regarding the erection sequence or time schedule;

f) Conditions affecting the position or continuity of members;

g) Limits of length and weight of steel members in transit and erection;

h) Drawings of the substructure, proposed or existing, showing:

   1) levels of stanchion foundations, if already determined;

2) any details affecting the stanchion bases or anchor bolts;

3) permissible bearing pressure on the foundation; and

4) provisions for grouting.

NOTE— In the case of new work, the substructure should be designed in accordance with the relevant standards dealing with foundations and substructure.

j) The maximum wind velocity appropriate to the site (*see* Section 1 of Part 7 'Construction Management, Practices and Safety, of the Code); and

k) Environmental factors, such as proximity to sea coast, and corrosive atmosphere. Reference to bye-laws and regulations affecting the steelwork design and construction.

F-3.2 Further Information Relating to Buildings

a) Plans of the floors and roof with principal dimensions, elevations and cross-sections showing heights between floor levels.

b) The occupancy of the floors and the positions of any special loads should be given.

c) The building drawings, which should be fully dimensioned, should preferably be to the scale of 1 to 100 and should show all stairs, fire escapes, lifts, etc, suspended ceilings, flues and ducts for heating and ventilating. Doors and windows should be shown, as the openings may be taken into account in the computations of dead load.

Requirements should be given in respect of any maximum depth of beams or minimum head room.

Large-scale details should be given of any special features affecting the steelwork.

d) The inclusive weight per m^2 of walls, floors, roofs, suspended ceilings, stairs and partitions, or particulars of their construction and finish for the computation of dead load.

The plans should indicate the floors, which are to be designed to carry partitions. Where the layout of partitions is not known, or a given layout is liable to alteration, these facts should be specially noted so that allowance may be made for partitions in any position (*see* Part 6 'Structural Design, Section 1 Loads, Forces and Effects').

e) The superimposed loads on the floors appropriate to the occupancy, as given in Part 6 'Structural Design, Section 1 Loads, Forces and Effects' or as otherwise required.

f) Details of special loads from cranes, runways, tips, lifts, bunkers, tanks, plant and equipment.

g) The grade of fire resistance appropriate to the occupancy as may be required.

F-4 INFORMATION REQUIRED BY TENDERER (IF NOT ALSO DESIGNER)

F-4.1 General

a) All information listed under **F-3.1**;

b) Climatic conditions at site-seasonal variations of temperature, humidity, wind velocity and direction;

c) Nature of soil. Results of the investigation of sub-soil at site of building or structure;

d) Accessibility of site and details of power supply;

e) Whether the steelwork contractor will be required to survey the site and set out or check the building or structure lines, foundations and levels;

f) Setting-out plan of foundations, stanchions and levels of bases;

g) Cross sections and elevations of the steel structure, as necessary, with large-scale details of special features;

h) Whether the connections are to be bolted, riveted or welded. Particular attention should be drawn to connections of a special nature, such as turned bolts, high strength friction grip bolts, long rivets and overhead welds;

j) Quality of steel, and provisions for identification;

k) Requirements in respect of protective paintings at works and on site, galvanizing or cement wash;

m) Approximate dates for commencement and completion of erection;

n) Details of any tests which have to be made during the course of erection or upon completion; and

p) Schedule of quantities. Where the tenderer is required to take off quantities, a list should be given of the principal items to be included in the schedule.

F-4.2 Additional Information Relating to Buildings

a) Schedule of stanchions giving sizes, lengths and typical details of brackets, joints, etc;

b) Plan of grillages showing sizes, lengths and levels of grillage beams and particulars of any stiffeners required;

c) Plans of floor beams showing sizes, lengths

and levels eccentricities and end moments. The beam reactions and details of the type of connection required should be shown on the plans;

d) Plan of roof steelwork. For a flat roof, the plan should give particulars similar to those of a floor plan. Where the roof is pitched, details should be given of trusses, portals, purlins, bracing, etc;

e) The steelwork drawings should preferably be to a scale of 1 to 100 and should give identification marks against all members; and

f) Particulars of holes required for services, pipes, machinery fixings, etc. Such holes should preferably be drilled at works.

F-4.3 Information Relating to Execution of Building Work

a) Supply of materials;

b) Weight of steelwork for payment;

c) Wastage of steel;

d) Insurance, freight and transport from shop to site;

e) Site facilities for erection;

f) Tools and plants;

g) Mode and terms of payment;

h) Schedules;

j) *Force Majeure* (sections and provisions for liquidation and damages for delay in completion); and

k) Escalation sections.

F-5 DETAILING

In addition to the number of copies of the approved drawings or details required under the contract, dimensioned shop drawings or details should be submitted in duplicate to the engineer who should retain one copy and return the other to the steel supplier or fabricators with his comments, if any.

F-6 TIME SCHEDULE

As the dates on which subsequent trades can commence, depend on the progress of erection of the steel framing, the time schedule for the latter should be carefully drawn up and agreed to by the parties concerned at a joint meeting.

F-7 PROCEDURE ON SITE

The steelwork contractor should be responsible for the positioning and levelling of all steelwork. Any checking or approval of the setting out by the general contractor or the engineer should not relieve the steelwork contractor of his responsibilities in this respect.

F-8 INSPECTION

References may be made to the accepted standard [6-6(41)] for general guidance.

F-8.1 Access to Contractor's Works

The contractor should offer facilities for the inspection of the work at all stages.

F-8.2 Inspection of Fabrication

Unless otherwise, agreed, the inspection should be carried out at the place of fabrication. The contractor should be responsible for the accuracy of the work and for any error, which may be subsequently discovered.

F-8.3 Inspection on Site

To facilitate inspection, the contractor should during all working hours, have a foreman or properly accredited charge hand available on the site, together with a complete set of contract drawings and any further drawings and instructions which may have been issued from time to time.

F-9 MAINTENANCE

F-9.1 General

Where steelwork is to be encased in solid concrete, brickwork or masonry, the question of maintenance should not arise, but where steelwork is to be housed in hollow fire protection or is to be unprotected, particularly where the steelwork is exposed to a corroding agent, the question of painting or protective treatment of the steelwork should be given careful consideration at the construction stage, having regard to the special circumstances of the case.

F-9.2 Connections

Where connections are exposed to a corroding agent, they should be periodically inspected, and any corroded part should be thoroughly cleaned and painted.

F-9.2.1 Where bolted connections are not solidly encased and are subject to vibratory effects of machinery or plant, they should be periodically inspected and all bolts tightened.

ANNEX G

(*Clause* D-1.1)

Table 44 Plastic Properties of Beams {*see also* accepted standard [6-6(35)]}

Designation	Weight per Metre	Sectional Area	Depth of Section	Width of Flange	Thickness of Flange	Thickness of Web	Radii of Gyration		Section Modulus	Plastic Modulus	Shape Factor
			(D)	(b_f)	(t_w)	(r_z)	(r_y)	(Z_{cz})	(t_f)	(Z_{pz})	(Z_{pz} / Z_{cz})
	kg/m	cm²	mm	mm	mm(6)	mm	cm	cm	cm³	cm³	
(1)	(2)	(3)	(4)	(5)	(6)	(7)	(8)	(9)	(10)	(11)	(12)
ISWB 600	*145.1	184.86	600	250	23.6	11.8	25.01	5.35	3 854.2	4 341.63	1.126 5
ISWB 600	*133.7	170.38	600	250	21.3	11.2	24.97	5.25	3 540.0	3 986.66	1.126 2
ISMB 600	*122.6	156.21	600	210	20.8	12.0	24.24	4.12	3 060.4	3 510.63	1.147 1
ISWB 550	*112.5	143.34	550	250	17.6	10.5	22.86	5.11	2 723.9	3 066.29	1.125 7
ISLB 600	*99.5	126.07	600	210	15.5	10.5	23.98	3.79	2 428.9	2 798.56	1.152 2
ISMB 550	103.7	132.11	550	190	19.3	11.2	22.16	3.73	2 359.8	2 711.98	1.149 2
ISWB 500	*95.2	121.22	500	250	14.7	9.9	20.77	4.96	2 091.6	2 351.35	1.124 2
ISLB 550	*86.3	109.97	550	190	15.0	9.9	21.99	3.48	1 933.2	2 228.16	1.152 6
ISMB 500	86.9	110.74	500	180	17.2	10.2	20.21	3.52	1 808.7	2 074.67	1.147 1
ISHB 450	92.5	117.89	450	250	13.7	11.3	18.50	5.08	1 793.3	2 030.95	1.132 5
ISHB 450	87.2	111.14	450	250	13.7	9.8	18.78	5.18	1 742.7	1 955.03	1.121 8
ISLB 500	*75.0	95.50	500	180	14.1	9.2	20.10	3.34	1 543.2	1 773.67	1.149 3
ISWB 450	79.4	101.15	450	200	15.4	9.2	18.63	4.11	1 558.1	1 760.59	1.130 0
ISHB 400	82.2	104.66	400	250	12.7	10.6	16.61	5.16	1 444.2	1 626.36	1.126 1
ISHB 400	77.4	98.66	400	250	12.7	9.1	16.87	5.26	1 404.2	1 556.33	1.115 5
ISMB 450	*72.4	92.27	450	150	17.4	9.4	18.15	3.01	1 350.7	1 533.36	1.150 0
ISLB 450	*65.3	83.14	450	170	13.4	8.6	18.20	3.20	1 223.8	1 401.35	1.145 1
ISWB 400	66.7	85.01	400	200	13.0	8.6	16.60	4.04	1 171.3	1 290.19	1.127 1
ISHB 350	72.4	92.21	350	250	11.6	10.1	14.65	5.22	1 131.6	1 268.69	1.121 2
ISHB 350	67.4	85.91	350	250	11.6	8.3	14.93	5.34	1 094.8	1 213.53	1.108 5
ISMB 400	*61.5	78.40	400	140	16.0	8.9	16.05	2.84	1 020.0	1 176.18	1.149 8
ISLB 400	*56.9	72.43	400	165	12.5	8.0	16.33	3.15	965.3	1 099.45	1.139 0
ISWB 350	56.9	72.50	350	200	11.4	8.0	14.63	4.03	887.0	995.49	1.122 3
ISHB 300	63.0	80.25	300	250	10.6	9.4	12.70	5.29	863.3	962.18	1.114 5
ISHB 300	58.8	74.85	300	250	10.6	7.6	12.95	5.41	836.3	921.68	1.102 1
ISMC 400	*49.4	62.93	400	100	15.3	8.6	15.48	2.83	754.1	891.03	1.181 6
ISMB 350	52.4	66.70	350	140	14.2	8.1	14.32	2.84	779.0	889.57	1.142 1
ISLB 350	49.5	63.01	350	165	11.4	7.4	14.45	3.17	751.9	851.11	1.132 0
ISLC 400	*45.7	58.25	400	100	14.0	8.0	15.50	2.81	699.5	825.02	1.179 4
ISWB 300	48.1	61.33	300	200	10.0	7.4	12.66	4.02	654.8	731.21	1.116 7
ISHB 250	54.7	69.71	250	250	9.7	8.8	10.70	5.37	638.7	708.43	1.109 2
ISLB 325	*43.1	54.90	325	165	9.8	7.0	13.41	3.05	607.7	687.76	1.131 7
ISHB 250	51.0	64.96	250	250	9.7	6.9	10.91	5.49	618.9	678.73	1.096 7
ISMC 350	*42.1	53.66	350	100	13.5	8.1	13.66	2.83	571.9	672.19	1.175 4
ISMB 300	*44.2	56.26	300	140	12.4	7.5	12.37	2.84	573.6	651.74	1.136 2
ISLC 350	*38.8	49.47	350	100	12.5	7.4	13.72	2.82	532.1	622.95	1.170 7
ISLB 300	*37.7	48.08	300	150	9.4	6.7	12.35	2.80	488.9	554.32	1.133 8
ISHB 225	46.8	59.66	225	225	9.1	8.6	9.58	4.84	487.0	542.22	1.113 4
ISWB 250	40.9	52.05	250	200	9.0	6.7	10.69	4.06	475.4	527.57	1.109 7
ISHB 225	43.1	54.94	225	225	9.1	6.5	9.80	4.96	469.3	515.82	1.098 7
ISMC 300	*35.8	45.64	300	90	13.6	7.6	11.81	2.61	424.2	496.77	1.171 1
ISMB 250	37.3	47.55	250	125	12.5	6.9	10.39	2.65	410.5	465.71	1.134 5
ISLC 300	*33.1	42.11	300	100	11.6	6.7	11.98	2.87	403.2	466.73	1.157 6
ISLB 275	*33.0	42.02	275	140	8.8	6.4	11.31	2.61	392.4	443.09	1.130 5
ISHB 200	40.0	50.94	200	200	9.0	7.8	8.55	4.42	372.2	414.23	1.112 9
ISHB 200	37.3	47.54	200	200	9.0	6.1	8.71	4.51	360.8	397.23	1.101 0
ISWB 225	33.9	43.24	225	150	9.9	6.4	9.52	3.22	348.5	389.93	1.118 9
ISMC 250	*30.4	38.67	250	80	14.1	7.1	9.94	2.38	305.3	356.72	1.168 4
ISMB 225	31.2	39.72	225	110	11.8	6.5	9.31	2.34	305.9	348.27	1.138 5
ISLB 250	*27.9	35.53	250	125	8.2	6.1	10.23	2.33	297.4	338.69	1.138 8
ISLC 250	28.0	35.65	250	100	10.7	6.1	10.17	2.89	295.0	338.11	1.146 2
ISWB 200	28.8	36.71	200	140	9.0	6.1	8.46	2.99	262.5	293.99	1.120 0
ISMC 225	*25.9	33.01	225	80	12.4	6.4	9.03	2.38	239.5	277.93	1.160 5
ISLC 225	*24.0	30.53	225	90	10.2	5.8	9.14	2.62	226.5	260.13	1.148 5
ISLB 225	*23.5	29.92	225	100	8.6	5.8	9.15	1.94	222.4	254.72	1.145 3
ISMB 200	25.4	32.33	200	100	10.8	5.7	8.32	2.15	223.5	253.86	1.135 8

Table 44 — (*Concluded*)

(1)	(2)	(3)	(4)	(5)	(6)	(7)	(8)	(9)	(10)	(11)	(12)
ISHB 150	34.6	44.08	150	150	9.0	11.8	6.09	3.35	218.1	251.64	1.153 8
ISHB 150	30.6	38.98	150	150	9.0	8.4	6.29	3.44	205.3	232.52	1.132 6
ISHB 150	27.1	34.[illegible]	150	150	9.0	5.4	6.50	3.54	194.1	215.64	1.111 0
ISMC 200	*2[illegible]	29.21	200	75	11.4	6.1	8.03	2.23	181.9	211.25	1.161 4
ISLC 200	*2[illegible]	26.22	200	75	10.8	5.5	8.11	2.37	172.6	198.77	1.151 6
ISWB 17[illegible]	[illegible]	[illegible]	17[illegible]	125	7.4	5.8	7.33	2.59	172.5	194.20	1.125 8
ISLB 200	*[illegible]	25.27	200	100	7.3	5.4	8.19	2.13	169.7	184.34	1.137 0
ISMB 175	*1[illegible]	24.62	175	90	8.6	5.5	7.19	1.86	145.4	166.08	1.142 2
ISMC 175	*19.1	24.38	175	75	10.2	5.7	7.08	2.23	139.8	161.65	1.156 3
ISLC 175	*17.6	22.46	175	75	9.5	5.1	7.16	2.38	131.3	150.36	1.145 2
ISLB 175	*16.7	21.30	175	90	6.9	5.1	7.17	1.93	125.3	143.30	1.143 7
ISLB 225	*1[illegible]	1[illegible].26	225	80	5.0	3.7	8.97	1.58	116.3	134.15	1.153 5
ISJC 200	[illegible].9	17.00	200	70	7.1	4.1	8.08	2.18	116.1	133.12	1.146 5
ISWB 150	1[illegible]	[illegible]1.57	150	100	7.0	5.4	6.22	2.09	111.9	126.86	1.133 7
ISMC 150	[illegible]	20.28	150	75	9.0	5.4	6.11	2.21	103.9	119.82	1.153 3
ISMB 150	14.[illegible]	19.00	150	80	7.6	4.8	6.18	1.66	96.9	110.48	1.140 1
ISLC 150	14.[illegible]	18.36	150	75	7.8	4.8	6.16	2.37	93.0	106.17	1.141 6
ISLB 150	13.[illegible]	[illegible].06	150	80	6.8	4.8	6.17	1.75	91.8	104.50	1.138 4
ISJC 175	*11.[illegible]	14.24	175	60	6.9	3.6	7.11	1.88	82.3	94.22	1.144 9
ISJB 200	*9.9	12.64	200	60	5.0	3.4	7.86	1.17	78.1	90.89	1.163 9
ISMB 125	13.[illegible]	16.60	125	75	7.6	4.4	5.20	1.62	71.8	81.85	1.139 9
ISMC 125	12.7	16.19	125	65	8.1	5.0	5.07	1.92	66.6	77.15	1.158 5
ISLB 125	11.9	15.12	125	75	6.5	4.4	5.19	1.69	65.1	73.93	1.135 6
ISJC 150	9.9	12.65	150	55	6.9	3.6	6.90	1.73	62.8	72.04	1.147 2
ISLC 125	10.7	13.67	125	65	6.6	4.4	5.11	2.05	57.1	65.45	1.146 2
ISJB 175	*8.1	10.28	175	50	4.6	3.0	6.83	0.97	54.8	64.22	1.179 9
ISMB 100	11.5	14.60	100	75	7.2	4.0	4.20	1.05	36.6	41.68	1.138 9
ISJB 150	*7.1	9.01	150	50	4.6	3.0	5.98	1.01	42.9	49.57	1.155 6
ISJC 125	7.9	10.07	125	50	6.6	3.0	5.18	1.60	43.2	49.08	1.136 2
ISMC 100	9.2	11.70	100	50	7.5	4.7	4.00	1.49	37.3	43.83	1.175 0
ISLB 100	8.[illegible]	10.23	100	50	6.4	4.0	4.06	1.12	33.6	38.89	1.157 3
ISLC 100	7.9	10.02	100	50	6.4	4.0	4.06	1.57	32.9	38.09	1.157 6
ISJC 100	*5.8	7.41	100	45	5.1	3.0	4.09	1.42	24.8	28.38	1.144 2
ISMC 75	6.8	8.67	75	40	7.3	4.4	2.96	1.21	20.8	24.17	1.190 4
ISLB 75	6.1	7.71	75	50	5.0	3.7	3.07	1.14	19.4	22.35	1.152 2
ISLC 75	*5.7	7.26	75	40	6.0	3.7	3.02	1.26	17.6	20.61	1.171 0

NOTE — Sections having 'weight per metre' marked with an asterisk (*) may be chosen as the section is lighter having high Z_p as compared to sections below it.

LIST OF STANDARDS

The following list records those standards which are acceptable as 'good practice' and 'accepted standards' in the fulfillment of the requirements of the Code. The latest version of a standard shall be adopted at the time of enforcement of the Code. The standards listed may be used by the Authority for conformance with the requirements of the referred clauses in the Code.

In the following list, the number appearing in the first column within parentheses indicates the number of the reference in this Section.

IS No.	*Title*
(1) 786 : 1967	Conversion factors and conversion tables (*first revision*)
(2) 808 : 1989	Dimensions for hot-rolled steel beam, column, channel and angle sections (*third revision*)
1852 : 1985	Rolling and cutting tolerance for hot rolled steel products (*fourth revision*)
(3) IS 8000	Geometrical tolerancing on technical drawings (*second revision*)

IS No.	Title
(Part 1) : 1985	Tolerances of form, orientation, location and run-out, and appropriate geometrical definitions (*first revision*)
(Part 2) : 1992	Maximum material principles (*first revision*)
(Part 3) : 1992	Dimensioning and tolerancing of profiles (*second revision*)
(Part 4) : 1976	Practical examples of indications on drawings
8976 : 1978	Guide for preparation and arrangement of sets of drawings and parts list
962 : 1989	Code of practice for architectural and building drawings (*second revision*)
(4) 962 : 1989	Code of practice for architectural and building drawings (*second revision*)
(5) 813 : 1986	Scheme of symbols for welding (*first revision*)
(6) 2062 : 2011	Hot rolled low, medium and high tensile structural steel (*seventh revision*)
(7) 1608 : 2005/ ISO 6892 : 1998	Metallic materials — Tensile testing at ambient temperatures (*third revision*)
(8) 1161 : 2014	Steel tubes for structural purposes (*fifth revision*)
(9) 814 : 2004	Specification for covered electrodes for manual metal arc welding of carbon and carbon manganese steel (*sixth revision*)
(10) 7557 : 1982	Specification for steel wire (up to 20 mm) for the manufacture of cold-forged rivets (*first revision*)
(11) 1148 : 2009	Steel rivet bars (medium and high tensile) — For structural purposes (*fourth revision*)
(12) 1929 : 1982	Specification for hot forged steel rivets for hot closing (12 to 36 mm diameter) (*first revision*)
2155 : 1982	Specification for cold forged solid steel rivets for hot closing (6 to 16 mm diameter) (*first revision*)

IS No.	Title
(13) 1148 : 2009	Steel rivet bars (medium and high tensile) — For structural purposes (*fourth revision*)
(14) 1363	Hexagon head bolts, screws and nuts of product grades A and B:
(Part 1) : 2002/ ISO 4014 : 1999	Hexagon head bolts (size range M1.6 to M64) (*fourth revision*)
(Part 2) : 2002/ ISO 4018 : 1999	Hexagon head screws (size range M5 to M64) (*fourth revision*)
(Part 3) : 2002/ ISO 4034 : 1999	Hexagon nuts (size range M5 to M64) (*fourth revision*)
1364	Hexagon head bolts, screws and nuts of product grades A and B:
(Part 1) : 2014/ ISO 4014 : 2005	Hexagon head bolts (size range M1.6 to M64) (*fourth revision*)
(Part 2) : 2002/ ISO 4017 : 1999	Hexagon head screws (size range M1.6 to M64) (*fourth revision*)
(Part 3) : 2002/ ISO 4032 : 1999	Hexagon nuts, Style 1 (size range M1.6 to M64) (*fourth revision*)
(Part 4) : 2003/ ISO 4035 : 1999	Hexagon thin nuts (chamfered) (size range M1.6 to M64) (*fourth revision*)
(Part 5) : 2002/ ISO 4036 : 1999	Hexagon thin nuts — Product grade B (unchamfered) (size range M1.6 to M10) (*fourth revision*)
1367	Technical supply conditions for threaded steel fasteners
(Part 1) : 2014/ ISO 898-1 : 2009	General equivalent to bolts, screws and studs (*second revision*)
(Part 2) : 2004/ ISO 898-2 : 2000	Tolerances for fasteners — Bolts, screws, studs and nuts — Coarse thread — Product grades A, B and C (*third revision*)
(Part 3) : 2002/ ISO 898-1 : 1999	Mechanical properties of fasteners made of carbon steel and alloy steel — Bolts, screws and studs (*fourth revision*)
(Part 5) : 2012/ ISO 898-5 : 1998	Mechanical properties of fasteners made of carbon steel and alloy steel — Set screws and similar threaded fasteners not under tensile stresses (*third revision*)

IS No.	Title
(Part 6) : 1994/ ISO 898-2 : 1992	Mechanical properties and test methods for nuts with specified (*third revision*)
(Part 7) : 1980	Mechanical properties and test methods for nuts without specified proof loads (*second revision*)
(Part 8) : 2014/ ISO 2320 : 2008	Prevailing torque type steel hexagon nuts — Mechanical and performance properties (*fourth revision*)
(Part 9)	Surface discontinuities
Sec 1 : 1993/ ISO 6157-1 : 1988	Bolts, screws and studs for general application (*third revision*)
Sec 2 : 1993/ ISO 6157-3 : 1988	Bolts, screws and studs for special applications (*third revision*)
(Part 10) : 2002/ ISO 6157-2 : 1995	Surface discontinuities — Nuts (*third revision*)
(Part 11) : 2002/ ISO 4042 : 1999	Electroplated coatings (*third revision*)
(Part 12) : 1981	Phosphate coatings on threaded fasteners (*second revision*)
(Part 13) : 1983	Hot dip galvanized coatings on threaded fasteners (*second revision*)
(Part 14) : 1984	Stainless steel threaded fasteners (*second revision*)
(Part 14)	Mechanical properties of corrosion-resistant stainless-steel fasteners
Sec 1 : 2002/ ISO 3506-1 : 1997	Bolts, screws and studs (*third revision*)
Sec 2 : 2002/ ISO 3506-2 : 1997	Nuts (*third revision*)
Sec 3 : 2002/ ISO 3506-3 : 1997	Set screws and similar fasteners not under tensile stress (*third revision*)
(Part 16) : 2002/ ISO 8991 : 1986	Designation system for fasteners (*third revision*)
(Part 17) : 2005/ ISO 3269 : 2000	Inspection, sampling and acceptance procedure (*fourth revision*)
(Part 18) : 1996	Packaging (*third revision*)
(Part 19) : 1997/ ISO 3800 : 1993	Axial load fatigue testing of bolts, screws and studs
(Part 20) : 1996/ ISO 898-7 : 1992	Torsional test and minimum torques for bolts and screws

IS No.	Title
	with nominal diameters 1 mm to 10 mm
3640 : 1982	Specification for hexagon fit bolts (*first revision*)
3757 : 1985	Specification for high strength structural bolts (*second revision*)
5369 : 1975	General requirements for plain washers and lock washers (*first revision*)
5370 : 1969	Specification for plain washers with outside diameter 3 × inside diameter
5372 : 1975	Taper washer for channels (ISMC) (*first revision*)
5374 : 1975	Taper washers for I-beams (ISMB) (*first revision*)
5624 : 1993	Specification for foundation bolts (*first revision*)
6610 : 1972	Specification for heavy washers for steel structures
6623 : 2004	Specification for high strength structural nuts (*second revision*)
6639 : 1972	Specification for hexagon bolts for steel structures
649 : 1997	Specification for hardened and tempered washers for high strength structural bolts and nuts (*second revision*)
(15) 4000 : 1992	Code of practice for high strength bolts in steel structures (*first revision*)
(16) 1030 : 1998	Carbon steel castings for general engineering purposes (*fifth revision*)
(17) 2708 : 1993	1.5 percent manganese steel castings for general engineering purpose (*third revision*)
(18) 814 : 2004	Specification for covered electrodes for manual metal arc welding of carbon and carbon manganese steel (*fifth revision*)
(19) 1395 : 1982	Low and medium alloy steel covered electrodes for manual metal arc welding (*third revision*)
(20) 1278 : 1972	Specification for filler rods and wires for gas welding (*second revision*)

IS No.	Title
(21) 1387 : 1993	General requirements for the supply of metallurgical materials (*second revision*)
(22) 15977 : 2013	Specification for classification and acceptance tests for bare solid wire electrodes and wire flux combination for submerged are welding of structural steel
(23) 6419 : 1996	Welding rods and bare electrodes for gas shielded arc welding of structural steel (*first revision*)
6560 : 1996	Molybdenum and chromium-molybdenum low alloy steel welding rods and bare electrodes for gas shielded arc welding (*first revision*)
(24) 513 : 2008	Cold reduced low carbon steel sheets and strips (*fifth revision*)
(25) 1079 : 2009	Specification for hot rolled carbon steel sheets and strips (*sixth revision*)
(26) 1367 (Part 3) : 2002/ISO 898-1 : 1999	Technical supply conditions for threaded steel fasteners : Part 3 Mechanical properties of fasteners made of carbon steel and alloy steel – bolts, screws and studs (*fourth revision*)
(27) 1875 : 1992	Specification for carbon steel billets, blooms, slabs and bars for forgings (*fifth revision*)
(28) 1990 : 2009	Steel rivet and stay bars for boilers (*second revision*)
(29) 2002 : 2009	Steel plates for pressure vessels for intermediate and high temperature service including boilers (*third revision*)
(30) 3039 : 1988	Structural steel for construction of hulls of ships (*second revision*)
(31) 6240 : 2008	Hot rolled steel plate (up to 6 mm) sheet and strip for the manufacture of low pressure liquefiable gas cylinders (*fourth revision*)
(32) 9295 : 1983	Steel tubes for idlers for belt conveyors (*first revision*)
(33) 10748 : 2004	Hot rolled steel strip for welded tubes and pipes — Specification (*second revision*)
(34) 801 : 1975	Code of practice for use of cold-formed light gauge steel structural members in general building construction (*first revision*)
(35) 808 : 1989	Dimensions for hot-rolled steel beam, column, channel and angle sections (*third revision*)
(36) 4326 : 2013	Code of practice for earthquake resistance design and construction of buildings (*third revision*)
(37) 3757 : 1985	Specification for high strength structural bolts (*second revision*)
(38) 1367	Technical supply conditions for threaded steel fasteners:
(Part 1) : 2014/ ISO 8992 : 2005	General requirements for bolts, screws and studs (*fourth revision*)
(Part 2) : 2002 / ISO 4759-1 : 2000	Tolerance for fasteners — Bolts, screws, studs and nuts — Product grades A, B and C (*third revision*)
(Part 3) : 2002/ ISO 898-1 : 1999	Mechanical properties of fasteners made of carbon steel and alloy steel – bolts, screws and studs (*fourth revision*)
(Part 5) : 2002/ ISO 898-5 : 1998	Mechanical properties of fasteners made of carbon steel and alloy steel – set screws and similar threaded fasteners not under tensile stresses (*third* revision)
(Part 6) : 1994/ ISO 898-2 : 1992	Mechanical properties and test methods for nuts with specified (*third revision*)
(Part 7) : 1980	Mechanical properties and test methods for nuts without specified proof loads (*third revision*)
(Part 8) : 2014/ ISO 2320:2008	Prevailing torque type steel hexagon nuts – Mechanical and performance properties (*fourth revision*)
(Part 9)	Surface discontinuities

IS No.	Title
Sec 1 : 1993/	Bolts, screws and studs for general application (*third revision*)
Sec 2 : 1993/ ISO 6157-3 : 1988	Bolts, screws and studs for special applications (*third revision*)
(Part 10) : 2002/ ISO 6157-2 : 1995	Surface discontinuities – Nuts (*third revision*)
(Part 11) : 2002/ ISO 4042 : 1999	Electroplated coatings (*third revision*)
(Part 12) : 1981	Phosphate coatings on threaded fasteners (*second revision*)
(Part 13) : 1983	Hot dip galvanized coatings on threaded fasteners (*second revision*)
(Part 14) : 1984	Stainless steel threaded fasteners (*second revision*)
(Part 14)	Mechanical properties of corrosion-resistant stainless-steel fasteners
Sec 1 : 2002/ ISO 3506-1 : 1997	Bolts, screws and studs (*third revision*)
Sec 2 : 2002/ ISO 3506-2 : 1997	Nuts (*third revision*)
Sec 3 : 2002/ ISO 3506-3 : 1997	Set screws and similar fasteners not under tensile stress (*third revision*)
(Part 16) : 2002/ ISO 8991 : 1986	Designation system for fasteners (*third revision*)
(Part 17) : 2005/ ISO 3269 : 2000	Inspection, sampling and acceptance procedure (*third revision*)
(Part 18) : 1996	Packaging (*third revision*)
(Part 19) : 1997/ ISO 3800 : 1993	Axial load fatigue testing of bolts, screws and studs
(Part 20) : 1996/ ISO 898-7 : 1992	Torsional test and minimum torques for bolts and screws with nominal diameters 1 mm to 10 mm
(39) 816 : 1969	Code of practice for use of metal arc welding for general construction in mild steel (*first revision*)
9595 : 1996	Metal arc welding of carbon and carbon manganese steels-Recommendations (*first revision*)
(40) 9077 : 1979	Code of practice for corrosion protection of steel reinforcement in RB and RCC construction
9172 : 1979	Recommended design practice for corrosion prevention of steel structures
(41) 7215 : 1974	Tolerances for fabrication of steel structures
(42) 12843 : 1989	Tolerances for erection of steel structures
(43) 9595 : 1996	Metal arc welding of carbon and carbon manganese steels-Recommendations (*first revision*)
(44) 919	ISO systems of limits and fits:
(Part 1) : 2014/ ISO 286-1 : 2010	Bases of tolerance, deviations and fits (*third revision*)
(Part 2) : 2014/ ISO 286-2 : 2010	Tables of standard tolerance grades and limit deviations for holes and shafts (*second revision*)
(45) 816 : 1969	Code of practice for use of metal arc welding for general construction in mild steel (*first revision*)
819 : 1957	Code of practice for resistance spot welding for light assemblies in mild steel
1024 : 1999	Code of practice for use of welding in bridges and structures subject to dynamic loading (*second revision*)
1261 : 1959	Code of practice for seam welding in mild steel
1323 : 1982	Code of practice for oxy-acetylene welding for structural work in mild steels (*second revision*)
9595 : 1996	Metal arc welding of carbon and carbon manganese steels — Recommendations (*first revision*)
(46) 817	Code of Practice for training of welders
(Part 1) : 1966	Manual metal arc welding (*second revision*)
(Part 2) : 1996	Oxyfuel welding (*second revision*)
1393 : 1961	Code of practice for training and testing of oxy-acetylene welders

IS No.	*Title*
7307 (Part 1) : 1974	Approval tests for welding procedures: Part 1 Fusion welding of steel
7310 (Part 1) : 1974	Approval tests for welders working to approved welding procedures: Part 1 Fusion welding of steel
7318 (Part 1) : 1974	Approval tests for welders when welding procedure approval is not required: Part 1 Fusion welding of steel

IS No.	*Title*
(47) 1477	Code of practice for painting of ferrous metals in buildings:
(Part 1) : 2000	Pre-treatment (*second revision*)
(Part 2) : 1971	Painting (*first revision*)
(48) 7205 : 1974	Safety code for erection of structural steelwork
(49) 456 : 2000	Code of practice for plain and reinforced concrete (*fourth revision*)

NATIONAL BUILDING CODE OF INDIA

PART 6 STRUCTURAL DESIGN

Section 7 Prefabrication, Systems Building and Mixed/Composite Construction:
7A Prefabricated Concrete

BUREAU OF INDIAN STANDARDS

CONTENTS

FOREWORD ... 3

1 SCOPE ... 5

2 TERMINOLOGY ... 5

3 MATERIALS, PLANS AND SPECIFICATIONS ... 6

4 MODULAR COORDINATION, ARCHITECTURAL TREATMENT AND FINISHES ... 6

5 COMPONENTS .. 7

6 PREFABRICATION SYSTEMS AND STRUCTURAL SCHEMES ... 9

7 DESIGN CONSIDERATIONS AND REQUIREMENTS ... 10

8 JOINTS ... 16

9 TESTS FOR COMPONENTS/STRUCTURES ... 19

10 MANUFACTURE, STORAGE, TRANSPORT AND ERECTION OF PRECAST ELEMENTS ... 28

11 EQUIPMENT ... 36

12 PREFABRICATED STRUCTURAL UNITS ... 37

ANNEX A COMMON DEFECTS AND REMEDIES ... 37

LIST OF STANDARDS ... 41

FOREWORD

This Code (Part 6 Subsection 7A) gives recommendations regarding modular planning component sizes prefabrication systems, design considerations, joints and manufacture storage transport and erection of prefabricated concrete elements for use in buildings and such related requirements for prefabricated concrete.

Prefabrication, though desirable for large scale building activities, is now gaining importance for use in the country. Two aspects of prefabrication, specifically to be borne in mind, are the system to be adopted for the different categories of buildings and the sizes of their components. Here the principle of modular coordination is of value and its use is recommended.

Advantages of recent trends in prefabrication have been taken note of and also the hazard attended to such construction. Recommendations on the need to avoid progressive collapse of the structure are covered to make a structure reasonably safe against such a collapse.

Prefabricated constructions being comparatively a new technique, some of the essential requirements for the manufacture of the prefabricated components and elements are also included in this Subsection.

Since the aim of prefabrication is to effect economy and improve quality and speed of construction, the selection of proper materials for prefabrication is also an important factor in the popularization of this technique The use of locally available materials with required characteristics and the materials which, due to their innate characteristics such as lightweight, easy workability, thermal insulation, non-combustibility, etc, that effect economy and improve quality, may also be tried. However, this Subsection pertains to prefabricated elements with cementitious materials.

The design of prefabricated buildings shall include provision for installations of all services and required piping, wiring and accessories to be installed in the building.

This Section was first published in 1970 and was subsequently revised in 1983. In the first revision, the main changes made included: inclusion of brief provision regarding importance of architectural treatment and finishes as applicable to prefabricated buildings; addition of a brief clause on the requirements of materials for use in prefabrication; elaboration of the clause on prefabricating systems and structural elements; revision of the clause on testing of components to include testing of structure or part of structure; and addition of a brief clause on the manufacture of cellular concrete.l:

In the second revision, this Section 7, earlier named as Prefabrication and Systems Building was renamed and restructured as follows:

Section 7 Prefabrication, Systems Buildings and Mixed/Composite Construction
- 7A Prefabricated Concrete
- 7B Systems Buildings and Mixed/Composite Construction

This Subsection, 7A covers prefabricated concrete, in the second revision of which the following main changes were made:

a) Modular coordination and modular dimension of the components were revised to have more flexibility for planning.
b) The provisions on tolerance were revised to include different types of prefabricated components.
c) A detailed clause on design requirements for safety of prefabricated buildings against progressive collapse was included.
d) A clause on sampling procedure was added for testing of components.

In the third, revision, in this Subsection, the following major modifications have been incorporated:

a) Definitions of some new terms have been added and existing terminologies modified, wherever required.

b) Provisions relating to prefab systems have been updated.

c) Detailed provisions on diaphragm action of floor systems have been included.

d) Emulative system has been categorized and detailed with respect to its definition, analysis, design, detailing, etc.

e) Design considerations have been updated where accidental impact due to vehicles has been included.

f) Provisions and testing procedures for water tightness of joints have been included.

g) Some of the typical precast joint details have been illustrated.

h) Provisions relating to fire resistance testing of prototypes under sustained load has been provided for.

j) Connection between adjacent prefabricated members only through frictional resistance has been removed and suggestions for resistance using shear has been included.

k) Provisions on site prefabrication have been updated.

m) Guidelines (restriction on the number of components) on vertical stacking on ground have been included.

n) The time for which a chosen component of a lot to be loaded as per the load test has been modified.

p) Provisions for tolerances in erection and associated design considerations have been included.

q) An annex has been included on common defects, their causes and remedies which cover dimensional deviations, cracks, honeycombing, damages, strand slippage, alignment, etc.

The information contained in this Subsection is largely based on IS 15916 : 2010 'Building design and erection using prefabricated concrete — Code of practice'. Annex A provides information relating to common defects and remedies related prefabricated concrete construction.

All standards, whether given herein above or cross-referred to in the main text of this Subsection, are subject to revision. The parties to agreement based on this Subsection are encouraged to investigate the possibility of applying the most recent editions of the standards.

For the purpose of deciding whether a particular requirement of this Subsection is complied with, the final value, observed or calculated, expressing the result of a test or analysis, shall be rounded off in accordance with IS 2 : 1960 'Rules for rounding off numerical values (*revised*)'. The number of significant places retained in the rounded off value should be the same as that of the specified value in this Subsection.

NATIONAL BUILDING CODE OF INDIA

PART 6 STRUCTURAL DESIGN

Section 7 Prefabrication, Systems Building and Mixed/Composite Construction: 7A Prefabricated Concrete

1 SCOPE

This Code (Part 6/Subsection 7A) gives recommendations regarding modular planning, component sizes, prefabrication systems, design considerations, joints and manufacture, storage, transportation and erection of prefabricated concrete elements for use in buildings and such related requirements for prefabricated concrete.

2 TERMINOLOGY

For the purpose of this Subsection, the following definitions shall apply.

2.1 Authority Having Jurisdiction — The authority which has been created by a statute and which, for the purpose of administering the Code/Part, may authorize a committee or an official or an agency to act on its behalf; hereinafter called the 'Authority'.

2.2 Basic Module — The fundamental module used in modular coordination, the size of which is selected for general application to building and its components.

NOTE — The value of the basic module has been chosen as 100 mm for the maximum flexibility and convenience. The symbol for the basic module is *M*.

2.3 Cellular Concrete — The material consisting of an inorganic binder (such as lime or cement or both) in combination with a finely ground material containing siliceous material (such as sand), gas generating material (for example, aluminium powder), water and harmless additives (optional); and/or steam cured under high pressure in autoclaves.

2.4 Components — A building product formed as a distinct unit having specified sizes in three dimensions.

2.5 Composite Members — Structural members comprising prefabricated structural units of steel, prestressed concrete or reinforced concrete and cast *in-situ* concrete connected together in such a manner that they act monolithically.

2.6 Diaphragm — It is a horizontal or nearly horizontal structural system (for example, reinforced concrete floors and horizontal bracing systems), which transmits lateral forces to vertical elements that resist earthquake-induced inertia effects.

2.7 Increments — Difference between two homologous dimensions of components of successive sizes.

2.8 Light-Weight Concrete — Concrete of substantially lower unit weight than that made from gravel or crushed stone.

2.9 Module — A unit of size used in dimensional coordination.

2.10 Modular Coordination — Dimensional coordination employing the basic module or a multimodule.

NOTE — The purposes of modular co-ordination are,

a) to reduce the variety of component sizes produced, and

b) to allow the building designer greater flexibility in the arrangement of components.

2.11 Modular Grid — A rectangular coordinate reference system in which the distance between consecutive lines is the basic module or a multimodule. This multimodule may differ for each of the two dimensions of the grid.

2.12 Multimodule — A module whose size is a selected multiple of the basic module.

2.13 Prefabricate — To fabricate components or assembled units prior to erection or installation in a building.

2.14 Prefabricated Building — The partly/fully assembled and erected building, of which the structural parts consist of prefabricated individual units or assemblies using ordinary or controlled materials, including service facilities; and in which the service equipment may be either prefabricated or constructed *in-situ*.

2.15 Sandwich Concrete Panels — Panels made by sandwiching an insulation material between two layers of reinforced/prestressed concrete to act as insulation for concrete panels.

2.16 Self Compacting Concrete — Concrete that is able to flow under its own weight and completely fill the voids within the formwork, even in the presence of dense reinforcement without any vibration, whilst maintaining homogeneity without segregation.

2.17 Shear Connectors — Structural elements, such as anchors, studs, channels, loops and spirals, intended to transmit the shear between the prefabricated member and the cast *in-situ* concrete and also to prevent separation at the interface.

2.18 System — It is a particular method of construction of buildings with certain order and discipline using the prefabricated components which are inter-related in functions and arc produced based on a set of instructions.

2.19 Unit — Building matcrial formed as a simple article with all three dimensions specified, complete in itself but intended to be part of a eompound unit or complete building. Examples are brick, block, floor panel, wall panel, etc.

2.20 Emulative Detailing System — A connection detailing system for precast concrete structures that has structural performance equivalent to that of a conventionally designed, *cast-in-situ*, monolithic concrete structure

2.21 Jointed Detailing System — A connection detailing system for precast concrete structures that has individual precast components separated from each other but connected using special connections such as welded or bolted plates.

3 MATERIALS, PLANS AND SPECIFICATIONS

3.1 Materials

Use of materials for plain, reinforced concrete and prestressed concrete shall satisfy the requirements of Part 6 'Structural Design, Section 5 Concrete, Subsection 5A Plain and Reinforced Concrete and Subsection 5B Prestressed Concrete' of the Code. Connections and jointing materials shall be in accordance with **8.3**.

3.1.1 While selecting the materials for prefabrication, the following characteristics shall be considered:

a) Easy availability;
b) Light weight for easy handling and transport;
c) Strength;
d) Thermal insulation property;
e) Easy workability;
f) Water absorption;
g) Serviceability along with durability;
h) Non-combustibility/fire resistance rating;
j) Sound insulation;
k) Easy assembly and compatibility to form a complete unit;
m) Economy; and
n) Any other special requirement in a particular application.

3.2 Plans and Specifications

The detailed plans and specifications shall cover the following:

a) Such drawings shall describe the elements and the structure and assembly including all required data of physical properties of component materials, material specification, strength of concrete for demoulding, casting/ erection tolerance and type of curing to be followed.
b) Details of connecting joints of prefabricates shall be given to an enlarged scale.
c) Site or shop location of services, such as installation of piping, wiring or other accessories integral with the total scheme shall be shown separately.
d) Data sheet indicating the location of the inserts and acceptable tolerances for supporting the prefabricate during erection, location and position of doors/windows/ventilators, etc, if any.
e) The drawings shall also clearly indicate location of handling arrangements for lifting and handling the prefabricated elements. Sequence of erection with critical check points and measures to avoid stability failure during construction stage of the building.

4 MODULAR COORDINATION, ARCHITECTURAL TREATMENT AND FINISHES

4.1 Modular Coordination

The basic module shall be adopted. After adopting this, further work is necessary to outline suitable range of multimodules with greater increments, often referred to as preferred increments. A set of rules as detailed below would be adequate for meeting the requirements of conventional and prefabricated construction.

These rules relate to the following basic elements:

a) The planning grid in both directions of the horizontal plan shall be:
   1) 15 *M* for industrial buildings, and
   2) 3 *M* for other buildings.

   The centre lines of load bearing walls should preferably coincide with the gridlines.
b) The planning module in the vertical direction shall be 2 *M for* industrial buildings and 1 *M* for other buildings.

c) Preferred increments for sill heights, doors, windows and other fenestration shall be 1 *M*.

d) In the case of internal columns, the grid lines shall coincide with the centre lines of columns. In case of external columns and columns near the lift and stair wells, the grid lines shall coincide with centre lines of the column in the topmost storey.

4.2 Architectural Treatment and Finishes

In general, prefabricated systems provide better opportunity to achieve superior finishes leading to an array of aesthetically pleasing options. The architectural elevational treatments, form and features can also be effectively incorporated in the structures with careful advanced planning. In addition, detailed coordination between the architectural and structural design team during the planning stage for panel joints and false joints is necessary. The purpose of finishes and architectural treatment is not only to give prefabricated buildings an individual character but also to effect better performance and greater user satisfaction.

Treatment and finishes have to be specified keeping in view the requirements of protection, function and aesthetics of internal and external spaces and surfaces.

While deciding the type of architectural treatment and finishes for prefabricated buildings, the following points should be kept in view:

a) Suitability for mass production techniques;

b) Recognition of the constraints imposed by the level of workmanship available;

c) Possibility of using different types of finishes;

d) Use of finishes and architectural treatment for the creation of a particular architectural character in individual buildings and in groups of buildings by the use of colour, texture, projections and recesses on surfaces, etc;

e) Incorporation of structural elements like joists, columns, beams, etc, as architectural features and the treatment of these for better overall performance and appearance;

f) Satisfactory finishing of surfaces; and

g) Use of light weight materials to effect economy in the structural system.

Some of the acceptable methods of finishes integral with the precasting are:

1) Concrete surface moulded to design/shape;

2) Laid-on finishing tiles fixed during casting;

3) Finishes obtained by washing, tooling, grinding, grooving of hardened concrete;

4) Exposed aggregates; and

5) Other integral finishes.

5 COMPONENTS

5.1 The dimensions of precast elements shall meet the design requirements. However, the actual dimensions shall be the preferred dimensions as follows:

a) *Flooring and roofing scheme* — Precast slabs or other precast structural flooring units:

1) *Length* — Nominal length shall be in multiples of 1 *M*;

2) *Width* — Nominal width shall be in multiples of 0.5 *M*; and

3) *Overall Thickness* — Overall thickness shall be in multiples of 0.1 *M*.

b) *Beams*:

1) *Length* — Nominal length shall be in multiples of 1 *M*;

2) *Width* — Nominal width shall be in multiples of 0.1 *M*; and

3) *Overall Depth* — Overall depth of the floor zone shall be in multiples of 0.1 *M*.

c) *Columns*:

1) *Height* — Height of columns for industrial building and other buildings shall be in multiples of 1 *M; and*

2) *Lateral Dimensions* — Overall lateral dimension or diameter of columns shall be in multiples of 0.1 *M*.

d) *Walls*:

Thickness — The nominal thickness of walls shall be in multiples of 0.1 *M*.

e) *Staircase:*

Width — Nominal width shall be in multiples of 1 *M*.

f) *Lintels*:

1) *Length* — Nominal length shall be in multiples of 1 *M*;

2) *Width* — Nominal width shall be in multiples of 0.1 *M*; and

3) *Depth* — Nominal depth shall be in multiples of 0.1 *M*.

g) *Sunshades/Chajja Projections*:

1) *Length* — Nominal length shall be in multiples of 1 *M*.

2) *Projection* — Nominal length shall be in multiples of 0.5 *M*.

5.2 Casting Tolerances of Precast Components

Sl No.	*Product Tolerances*	*Product (see Key No.)*
(1)	(2)	(3)
i)	Length:	
	a) ± 5 mm	1, 7
	b) ± 5 mm or ± 0.1 percent, whichever is greater	2, 3, 8
	c) ± 0.1 percent subject to maximum of $^{+5}_{-10}$ mm	4
	d) 1) ± 2 mm for length below and up to 500 mm 2) ± 5 mm for length over 500 mm	5
	e) ±10 mm	6, 9,10
ii)	Thickness/cross-sectional dimensions:	
	a) ± 3 mm	1
	b) ± 3 mm or 0.1 percent, whichever is greater	2, 8
	c) 1) ± 2 mm up to 300 mm wide 2) ± 3 mm greater than 300 mm wide	4, 5
	d) ± 2 mm	3, 7
	e) ± 4 mm	6, 9, 10
iii)	Straightness/Bow:	
	a) ± 5 mm or 1/750 of length, whichever is greater	2, 4, 8
	b) ± 3 mm	1, 5
	c) ± 2 mm	7
iv)	*Squareness* — When considering the squareness of the corner, the longer of two adjacent sides being checked shall be taken as the base line, and the following tolerances shall apply:	
	a) The longer side shall not vary in length from the perpendicular by more than 5 mm	2, 5, 8
	b) The shorter side shall not vary in length from the perpendicular by more than 3 mm	1, 7
	c) The shorter side shall not be out of square line for more than $^{+2}_{-5}$ mm	4
v)	*Twist* — Any corner shall not be more than the tolerance given below from the plane containing the other three corners:	
	a) 1) Up to 600 mm in width and up to 6 m in length — 5 mm 2) Over 600 mm in width and for any length — 10 mm	2, 8
	b) ± 1/1 500 of dimension or ± 5 mm. whichever is less	4
	c) ± 3 mm	1
	d) ± 1 mm	7
vi)	*Flatness* — The maximum deviation from 1.5 m straight edge placed in any position on a nominal plane surface shall not exceed:	
	a) ± 5 mm	2, 8
	b) ± 3 mm	4
	c) ± 2 mm	1, 7
	d) ± 4 mm or maximum of 0.1 percent length	5

Key No. for product reference:

1 Channel unit.
2 Ribbed slab unit/hollow slab.
3 Waffle unit.
4 Large panel prefabrication.
5 Cellular concrete floor/roof slabs.
6 Prefabricated brick panel.
7 Precast planks.
8 Ribbed/plain wall panel.

6 PREFABRICATION SYSTEMS AND STRUCTURAL SCHEMES

6.1 The word 'system' refers to a particular method of construction of buildings using the prefabricated components which are inter-related in functions and are produced to a set of instructions. With certain constraints, several plans are possible, using the same set of components. The degree of flexibility varies from system to system. However, in all the systems there is a certain order and discipline.

6.2 The following aspects, among others, are to be considered in devising a system:

a) Effective utilization of spaces;
b) Straight and simple walling scheme;
c) Limited sizes and numbers of components;
d) Limited opening in bearing walls;
e) Regulated locations of partitions;
f) Standardized service and stair units;
g) Limited sizes of doors and windows with regulated positions;
h) Structural clarity and efficiency;
j) Suitability for adoption in low rise and high rise building;
k) Ease of manufacturing, storing and transporting;
m) Speed and ease of erection;
n) Effective utilization of available equipment, plant and machinery; and
p) Simple jointing system.

6.3 Prefabrication Systems

The system of prefabricated construction depends on the extent of the use of prefabricated components, their materials, sizes and the technique adopted for their manufacture and use in building.

6.3.1 *Types of Prefabrication Components*

The prefabricated concrete components such as those given below may be used which shall be in accordance with relevant Indian Standards (*see* Part 5 'Building Materials' of the Code) and the accepted standards [6-7A(1)], where available:

a) Reinforced/prestressed concrete channel unit,
b) Reinforced/prestressed concrete slab unit,
c) Reinforced/prestressed concrete beams,
d) Reinforced/prestressed concrete columns,
e) Reinforced/prestressed concrete hollow core slab,
f) Reinforced concrete waffle slab/shells,
g) Reinforced/prestressed concrete wall elements,
h) Hollow/solid concrete blocks and battens,
j) Precast planks and joists for flooring and roofing,
k) Precast joists and trussed girders,
m) Light weight/cellular concrete slabs/wall panels,
n) Precast lintel and *Chajjas*,
p) Large panel prefabricates,
q) Reinforced/prestressed concrete trusses,
r) Reinforced/prestressed roof purlins,
s) Precast concrete L-panel unit,
t) Prefabricated concrete double-T unit,
u) Prefabricated brick panel unit,
w) Prefabricated sandwich concrete panels,
y) Precast concrete foundation, and
z) Precast concrete staircase.

There may be other types of components which may be used with the approval of the Authority.

NOTE — The elements may be cast at the site or off the site.

6.3.2 *Open Prefabrication System*

There are two categories of open prefab system depending on the extent of prefabrication used in the construction as given in **6.3.2.1** and **6.3.2.2**.

6.3.2.1 *Partial prefabrication system*

This system basically uses precast roofing and flooring components and other minor elements like lintels, *Chajjas*, kitchen sills in conventional building construction. The structural system could be in the form of *in-situ* framework or load bearing walls.

6.3.2.2 *Full prefabrication system*

In this system almost all the structural components are prefabricated. The filler walls may be of brick/block masonry or of any other locally available material.

6.3.3 *Large Panel Prefabrication System*

This system is based on the use of large prefab components. The components used are precast concrete large panels for walls, floors, roofs, balconies, staircases, etc. The casting of the components could be at the site or off the site.

Depending upon the extent of prefabrication, this system can also lend itself to partial prefab system and full prefab system.

Structural scheme with precast large panel walls can be classified as given in **6.3.3.1** to **6.3.3.3**.

6.3.3.1 *Precast Walls*

6.3.3.1.1 Based on the structural functions of the walls, the precast walls may be classified as:

a) Load bearing walls,
b) Non-load bearing walls, and
c) Shear walls.

6.3.3.1.2 Based on construction, the precast walls may be classified as:

a) *Homogeneous walls* — which could be solid, hollow or ribbed; and

b) *Non-homogeneous walls* — these could be composite or sandwich panels.

6.3.3.1.3 Based on their locations and functional requirements the precast walls may also be classified as:

a) External walls, which may be load bearing or non-load bearing depending upon the lay-out; these are usually non-homogeneous walls of sandwiched type to impart better thermal comfort; they can also act as shear walls to resist horizontal loads with appropriate design and

b) Internal walls providing resistance against vertical loads, horizontal loads, fire, etc; these are normally homogeneous walls.

6.3.3.2 *Precast floors*

6.3.3.2.1 Depending upon the composition of units, precast flooring units may be classified as:

a) *Homogeneous floors* — which may be of solid slabs, cored slabs, ribbed or waffle slabs and precast slabs with structural topping (60-75 mm thick) designed as a composite system; and

b) *Non-homogeneous floors* — which may be of multi-layered units with combinations of light weight concrete or reinforced/prestressed concrete, with filler blocks.

6.3.3.2.2 Depending upon the way the loads are transferred, the precast floors may be classified as one way, two way or cantilever systems:

a) One way system transfers loads to supporting members in one direction only. The precast elements which come under this category are channel slabs, hollow core slabs, channels and ties system, light weight/cellular concrete slabs, etc.

b) Two way systems transfers loads in both the directions imparting loads on the four edges. The precast elements under this category are room sized panels, two way ribbed or waffle slab systems, etc.

c) Cantilever components are supported on one edge or two adjacent edges and other ends without supports.

6.3.3.3 *Staircase systems*

Staircase system may consist of single flights with in-built risers and treads in the element. The flights are normally unidirectional transferring the loads to supporting landing slabs or load bearing walls.

6.3.4 *Box Type Construction*

In this system, room size units are prefabricated and erected at site. Toilet and kitchen blocks may also be similarly prefabricated and erected at site.

NOTE — This system derives its stability and stiffness from the box units which are formed by four adjacent walls. Walls are jointed to make rigid connections among themselves. The box unit rests on foundation - conventional or precast.

7 DESIGN CONSIDERATIONS AND REQUIREMENTS

7.1 Design Considerations

7.1.1 Precast structures could be analyzed either as an emulative systems or as a jointed system. However, emulative analysis is typically preferred where the structure is detailed such that the overall behaviour of the building in its service life will be similar to a RCC building constructed *in-situ*. In emulative approach, the precast structure is analyzed as a monolithic one and the joints in them designed to take the forces of an equivalent discrete system. Resistance to horizontal loading shall be provided by having appropriate moment and shear resisting joints or placing shear walls (in diaphragm braced frame type of construction) in two directions at right angles or otherwise. No account is to be taken of rotational stiffness, if any, of the floor-wall joint in case of precast bearing wall buildings. The individual components shall be designed, taking into consideration the appropriate end conditions and loads at various stages of construction. The components of the structure shall be designed for loads and reactions in accordance with Part 6 'Structural Design, Section 1 Loads, Forces and Effects' of the Code. In addition, members shall be designed for handling, erection and impact loads that might be expected during handling and erection.

NOTE — Rotational stiffness can be accounted for long/short term deflection calculations provided that the approach is mutually agreed by the design team and approved by the Authority.

7.1.2 In some conventional forms of construction, experience has shown that structures are capable of safely sustaining abnormal conditions of loading and remaining stable after the removal of primary structural members. It has been shown that some forms of building structure and particularly some industrialized large

panel systems have little reserve strength to resist forces not specifically catered for in the design. In light of this, therefore, recommendations made in **7.1.3** to **7.1.10** should be kept in mind for ensuring stability of such structure.

7.1.3 Adequate buttressing of external wall panels is important since these elements are not fully restrained on both sides by floor panels. Adequate design precautions may be taken by the designer. External wall panel connections are likely to be the weakest points of a precast panel building, if not designed properly.

7.1.4 It is equally important to provide restraint to all load bearing elements at the corners of the building. These elements and the external ends of cross-wall units should be stiffened either by introducing columns as connecting units or by jointing them to non-structural wall units which in emergency may support the load. Jointing of these units should be done bearing in mind the need for load support in an emergency.

7.1.5 In prefabricated construction, the possibility of gas or other explosions which can remove primary structural elements leading to progressive collapse of the structure shall be taken into account. It is, therefore, necessary to consider the possibility of progressive collapse in which the failure or displacement of one element of a structure causes the failure or displacement of another element and results in the partial or total collapse of the building.

7.1.6 Provision in the design to reduce the probability of progressive collapse is essential in buildings of over six storeys and is of relatively higher priority than for buildings of lower height.

7.1.7 It is necessary to ensure that any local damage to a structure does not spread to other parts of the structure remote from the point of mishap and that the overall stability is not impaired, but it may not be necessary to stiffen all parts of the structure against local damage or collapse in the immediate vicinity of a mishap, unless the design briefs specifically requires this to be done. The requirements as specified at **7.2** shall be followed to prevent progressive collapse of the structure.

7.1.8 Additional protection may be required in respect of damage from vehicles; further, it is necessary to consider the effect of damage to or displacement of a load-bearing member by an uncontrolled vehicle. It is strongly recommended that important structural members are adequately protected by concrete kerbs or similar method.

In areas with possibility of passenger vehicular impact, the precast components should be designed for a horizontal load of 27 kN, in any direction, acting at heights between 450 mm and 700 mm on an area not larger than 300 mm × 300 mm to produce maximum load effect. This load is not required to act concurrently with any handrail or guard rail system loads.

7.1.9 In all aspects of erection that affect structural design, it is essential that the designer should maintain a close liaison with the builder/contractor regarding the erection procedures to be followed.

7.1.10 Failures that have occurred during construction appear to be of two types. The first of these is the pack-of-cards type of collapse in which the absence of restraining elements, such as partitions, cladding or shear walls, means that the structure is not stable during the construction period. The second is the situation in which one element falls during erection and lands on an element below. The connections of the lower element then give way under the loading, both static and dynamic, and a chain reaction of further collapse is set up.

7.1.10.1 A precaution against the first form of failure is that the overall stability of a building shall be considered in all its erection stages as well as in its completed state. All joints that may be required to resist moments and shears during the erection stage only, shall be designed with these in mind. Temporary works required to provide stability during construction shall be designed carefully.

7.1.10.2 To guard against the second form of failure, that is, the dropping of a unit during erection, particular attention shall be given to the details of all pre-formed units and their to ensure that they are sufficiently robust to withstand the maximum stresses that can arise from site conditions. Precast concrete construction generally shall be capable of withstanding the impact forces that can arise from bad workmanship on site.

7.1.11 The design shall take care of requirements owing to erection given at **10.11**.

7.1.12 In case of buildings whose floors are capable of providing rigid horizontal diaphragm action, the total shear in any horizontal plane shall be distributed to the various vertical elements of lateral forces resisting system, assuming the floors to be infinitely rigid in the horizontal plane.

In case of building whose floor diaphragms cannot be treated as infinitely rigid in their own plane, the lateral shear at each floor shall be distributed to the vertical elements resisting the lateral forces, considering the in-plane flexibility of the diaphragms.

NOTES

1 A floor diaphragm shall be considered to be flexible, if it deforms such that the maximum lateral displacement measured from the chord of the deformed shape at any point of the diaphragm is more than 1.5 times the average displacement of the entire diaphragm.

2 Reinforced concrete monolithic slab-beam floors or those consisting of prefabricated/precast elements with topping reinforced screed can be taken as a rigid diaphragm.

7.1.12.1 Floor systems play a key role in the lateral resistance of building structures by providing diaphragm action. Diaphragm action serves to,

a) transfer lateral loads at each level to the lateral load-resisting elements (walls, frames); and
b) unite individual lateral load-resisting elements into a single lateral load-resisting system.

These actions are crucial in allowing the lateral (load-resisting) system to perform as intended. Diaphragm action occurs by virtue of the in-plane stiffness inherent in the floor system. Accordingly, significant in-plane forces may develop in the diaphragm during lateral loading. In this regard, the panelled nature of floor systems in precast concrete construction can present challenges in the seismic design of diaphragms. These design challenges may pertain to providing adequate strength, stiffness and in cases, ductility in the diaphragm and diaphragm connections.

7.1.12.2 *Standard analysis methods for diaphragm design*

The magnitude of the inertia force at each floor level is estimated using a capacity design approach or a diaphragm design force distribution based on equivalent lateral loads. A key design step is to transform the diaphragm design forces into internal actions. For regular floor plans, a 'horizontal plate girder' analogy is typically used in design. In this approach, diaphragm design forces are typically applied at each level as a distributed in-plane load along the length of the diaphragm. The resulting girder internal forces are used to determine the amount of flexural reinforcement (chord steel), shear (web) reinforcement, and lateral system reaction load path reinforcement (collector steel). An irregular mass distribution in plan may require the design forces to take on a smeared load configuration as the mass distribution with respect to diaphragm depth has relevance in determining the proper web reinforcement.

For more complex diaphragm configurations, a strut-and-tie method can be used. However, there is compelling evidence that the strut-and-tie method accurately predicts the behaviour of floor diaphragms in general and may become the preferred method of diaphragm analysis. *See* Fig. 1 and Fig. 2.

7.2 Design Requirements for Safety Against Progressive Collapse

7.2.1 Prefabricated buildings shall be designed with proper structural integrity to avoid situations where damage to small areas of a structure or failure of single elements may lead to collapse of major parts of the structure.

The following precaution may generally provide adequate structural integrity:

a) All buildings should be capable of safely resisting the minimum horizontal load of 1.5 percent of characteristic dead load applied at each floor or roof level simultaneously (*see* Fig. 3).
b) All buildings shall be provided with effective horizontal ties,
   1) around the periphery;
   2) internally (in both directions); and
   3) to columns and walls.
c) All buildings of five or more storeys shall be provided with vertical ties.

In proportioning the ties, it may be assumed that no other forces are acting and the reinforcement is acting at its characteristic strength (that is, the material factor of safety is not applicable).

Normal procedure may be to design the structure for the usual loads and then carry out a check for the tie forces.

7.2.2 *Continuity and Anchorage of Ties*

Bars shall be lapped, welded or mechanically joined as in accordance with Part 6 'Structural Design, Section 5 Concrete, Subsection 5A Plain and Reinforced Concrete' of the Code.

7.2.3 *Design of Ties*

7.2.3.1 *Peripheral ties*

At each floor and roof level an effectively continuous tie should be provided within 1.2 m of the edge of the building or within the perimeter wall (*see* Fig. 4).

The tie should be capable to resist a tensile force of F_t equal to 60 kN or $(20 + 4N)$ kN whichever is less, where N is the number of storeys (including basement).

7.2.3.2 *Internal ties*

These are to be provided at each floor and roof level in two directions approximately at right angles. Ties should be effectively continuous throughout their length and be anchored to the peripheral tie at both ends, unless continuing as horizontal ties to columns or walls (*see* Fig. 5). The tensile strength, in kN per metre width shall be the greater of,

$$\frac{(g_k + q_k)}{7.5} \cdot \frac{l_r F_t}{5} \text{ and } 1.5\, F_t$$

where $(g_k + q_k)$ is the sum of average characteristic dead and imposed floor loads, in kN/m^2, and l_r is the

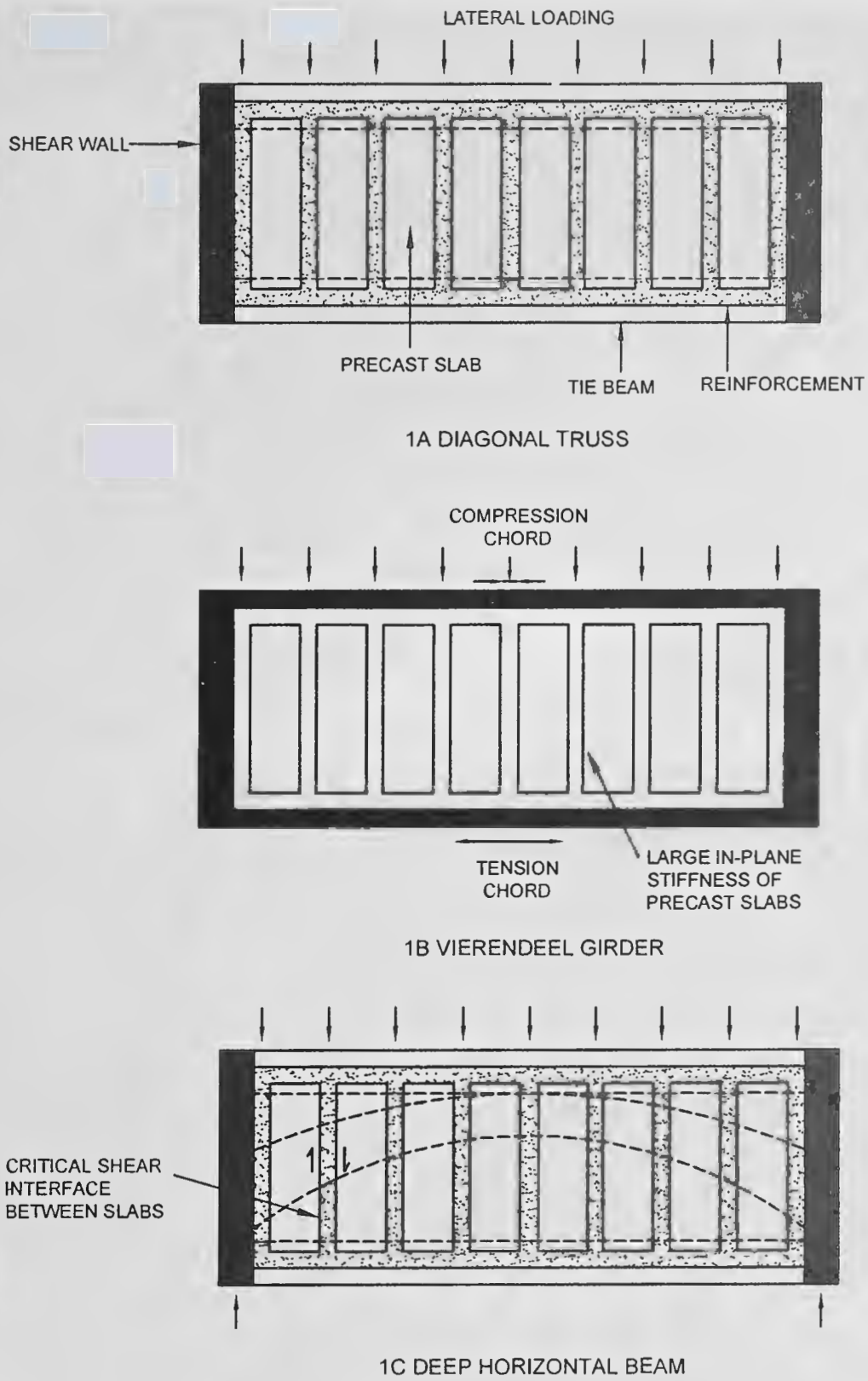

FIG. 1 STRUCTURAL MODELS USED TO ANALYSE FLOOR DIAPHRAGMS

greater of the distance between the centre of columns, frames or walls supporting any two adjacent floor spans in the direction of the tie under consideration.

The bars providing these ties may be distributed evenly in the slabs (*see* Fig. 6) or may be grouped at or in the beams, walls or other appropriate positions but at spacings generally not greater than 1.5 l_r.

7.2.3.3 *Horizontal ties to column and wall*

All external load-bearing members such as columns and walls should be anchored or tied horizontally into the structure at each floor and roof level. The design force for the tie is to be greater of,

a) $2F_t$ kN or $l_s \times F_t/2.5$ kN, whichever is less for a column or for each metre length if there is a wall (l_s is the floor to ceiling height in metre).

b) 3 percent of the total ultimate vertical load in the column or wall at that level.

For corner columns, this tie force should be provided in each of two directions approximately at right angles.

7.2.3.4 *Vertical ties (for buildings of five or more storeys)*

Each column and each wall carrying vertical load should be tied continuously from the foundation to the roof level. The reinforcement provided is required only to resist a tensile force equal to the maximum design ultimate load (dead and imposed) received from any one storey.

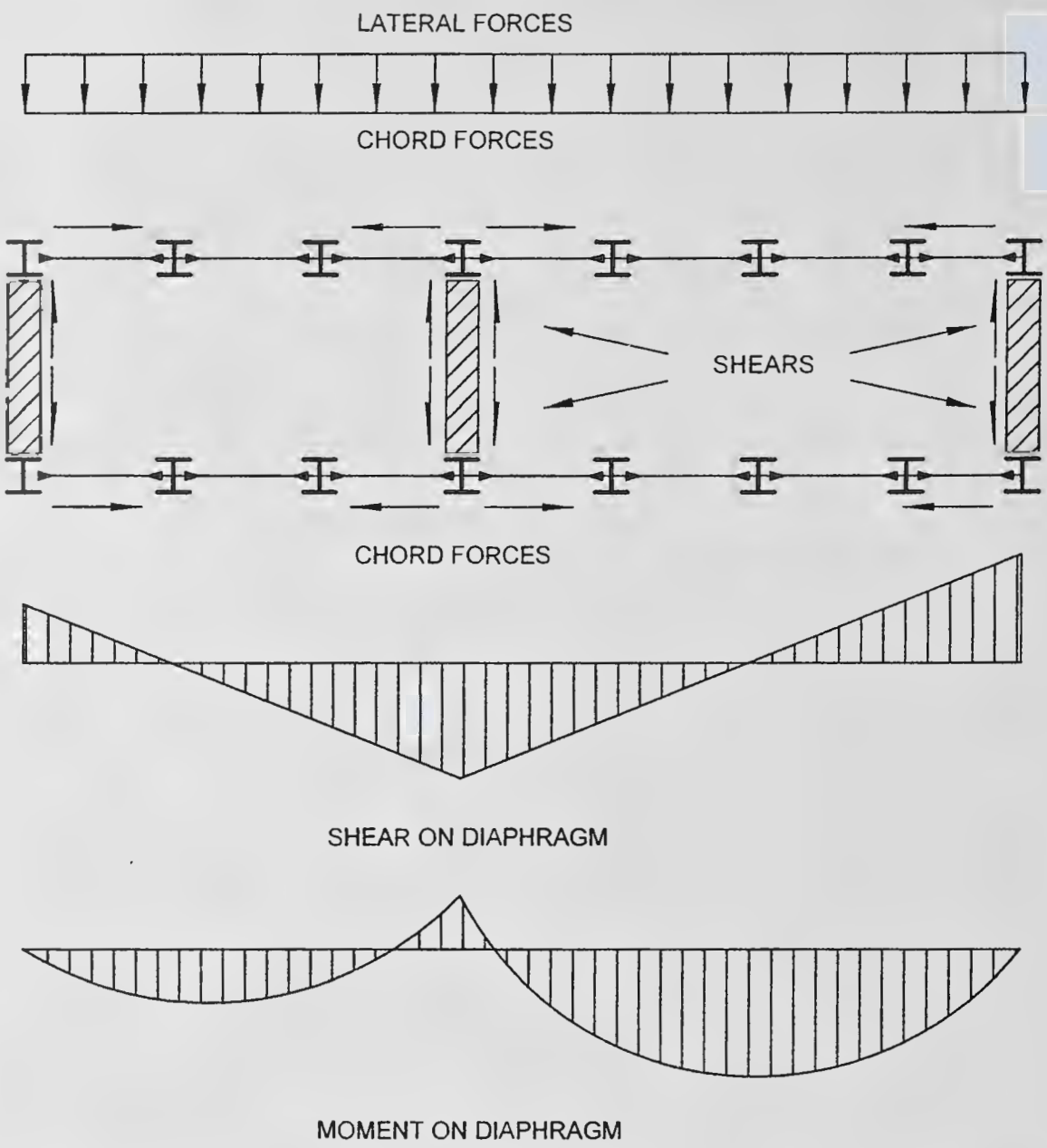

NOTE — The floor deck is assumed to act as the web of the continuous beam and the beams at the floor periphery are assumed to act as the flanges of the continuous beam

FIG. 2 DESIGN FORCES ON A DIAPHRAGM

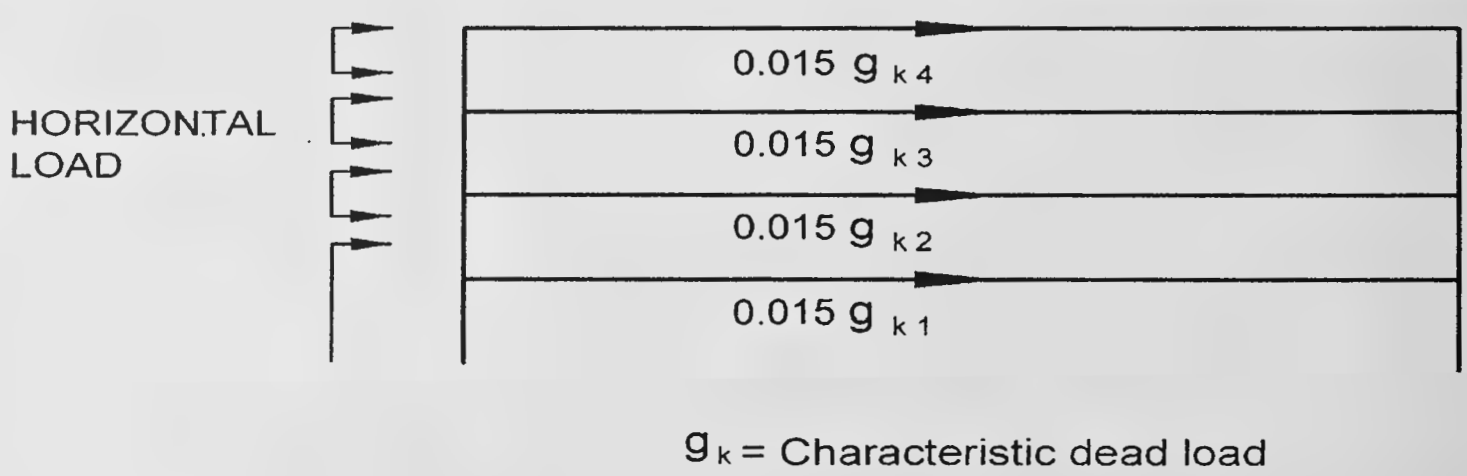

FIG. 3 HORIZONTAL LOADS

In situation where provision of vertical ties cannot be done, the element should be considered to be removed and the surrounding members designed to bridge the gap.

7.2.4 *Key Elements*

For buildings of five or more storeys, the layout should be checked to identify key elements. A key element is such that its failure would cause the collapse of more than a limited area close to it.

The limited area defined above may be taken equal to 70 m^2 or 15 percent of the area of the storey, whichever is lesser.

If key elements exists, it is preferable to modify the layout so that the key element is avoided.

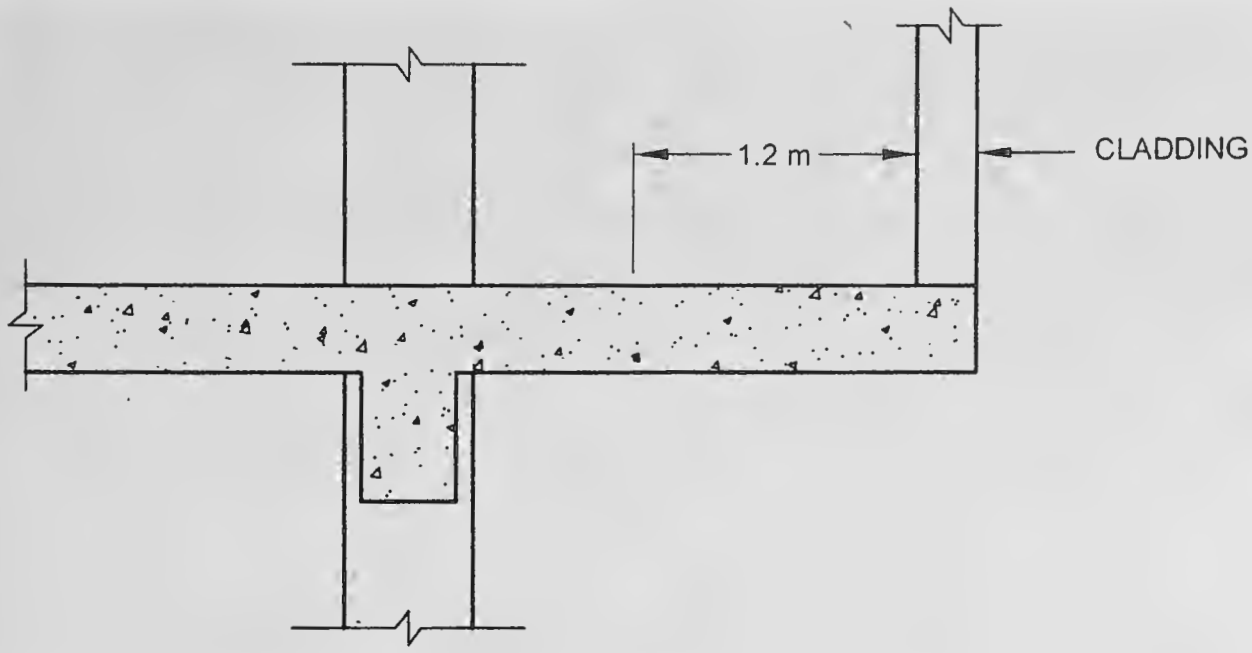

NOTE — If there are cantilever slabs, supporting external cladding, projecting in front of the columns and these are more than 1.2 m, than peripheral tie shall go in the slab.

FIG. 4 POSITION FOR PERIPHERAL TIE

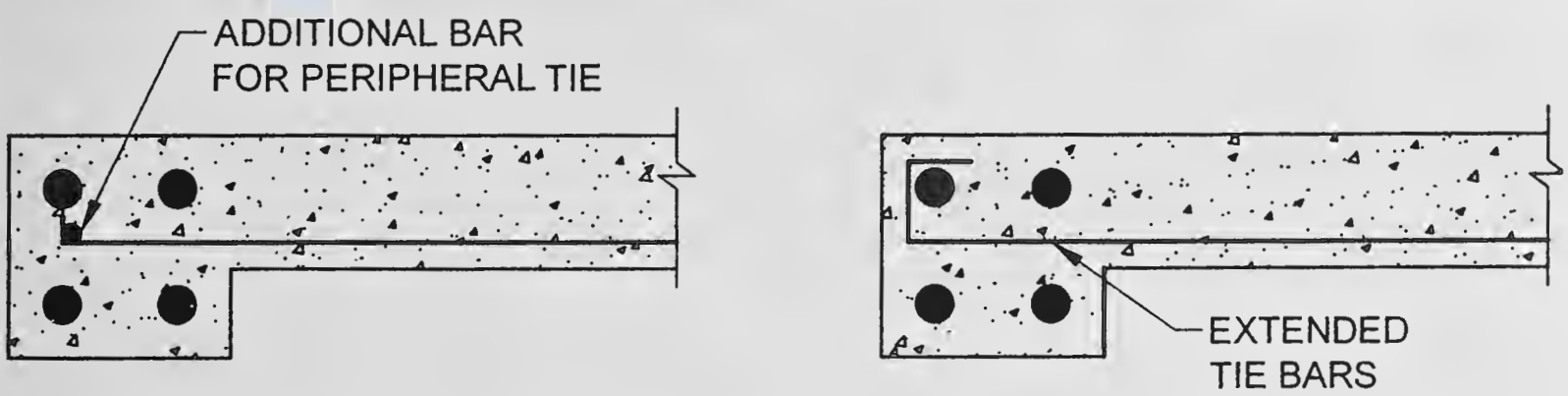

NOTE — If the peripheral tie consists of bars in an edge beam, then the bottom bars in the slabs will not be at the same level as the peripheral tie bars. It is suggested that either an additional bar be used for the peripheral tie or the internal tie bars be extended and anchored around the top bar in the beam.

FIG. 5 ANCHORING OF TIES IN SLABS

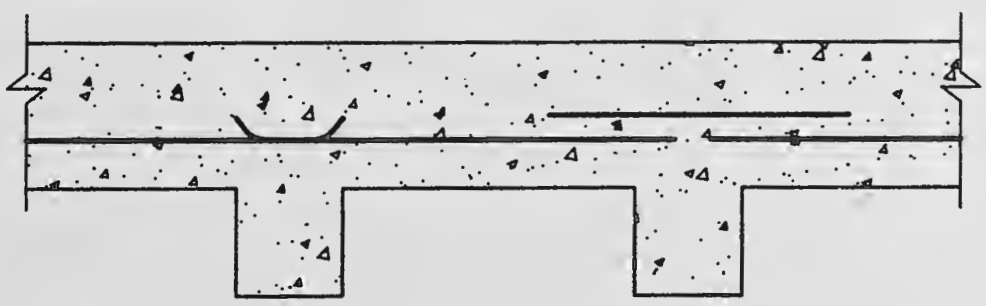

NOTE — For continuity in continuous slabs, bars are distributed evenly in a floor slab by means of lapping some bottom steel at supports, either by extending existing bars or by the addition of splice bars.

FIG. 6 CONTINUITY REQUIREMENT FOR SLAB

7.3 Bearing for Precast Units

7.3.1 *Jointed Precast Detailing*

The precast units shall have a bearing of at least of 100 mm on masonry supports and of 75 mm at least on steel or concrete. Steel angle shelf bearings shall have a 100 mm horizontal leg to allow for a 50 mm bearing exclusive of fixing clearance. When deciding to what extent, if any, the bearing width may be reduced in special circumstances, factors, such as loading, span, height of wall and provision of continuity, shall be taken into consideration.

7.3.2 *Emulative Precast Detailing*

In emulative precast detailing, the structure under service conditions behaves similar to a cast-in-situ structure and inherits the redundancy due to continuity. Typically, the components are tied together with appropriate steel ties and connected using a *cast-in-situ* 'stitch' concrete pour for near monolithic continuity. The bearing for the building components thus becomes a critical concern only during the erection stages. The precast members, in emulative detailing system, shall have a bearing of at

least 40 mm on concrete support components. In cases, where the supports are in steel or masonry system where emulative detailing is not followed in local limited areas, bearing of at least 75 mm for steel support and 100 mm for masonry support should be provided. Otherwise, for both systems, bearing of at least 40 mm should be provided at the structural engineer's discretion. In special circumstances, where additional temporary supports/ shoring is provided during erection, bearing of at least 25 mm should be acceptable at the structural engineer's discretion. Such temporary supports shall be kept in place until the 'stitch' concrete pour gains at least 70 percent of the final design strength.

8 JOINTS

8.1 The design of joints shall be made in the light of their assessment with respect to the following considerations:

a) *Feasibility* — The feasibility of a joint shall be determined by its load carrying capacity in the particular situation in which the joint is to function.

b) *Practicability* — Practicability of joint shall be determined by the amount and type of material required in construction; cost of material, fabrication and erection and the time for fabrication and erection.

c) *Serviceability* — Serviceability shall be determined by the joints/expected behaviour to repeated or possible overloading and exposure to climatic or chemical conditions.

d) *Fire rating* — The fire rating for joints of precast components shall be higher or at least equal to connecting members.

NOTE — Fire resistance testing under sustained loading may also be carried out on a prototype, as mutually agreed to between the parties concerned.

e) *Appearance* — The appearance of precast components' joints shall merge with architectural aesthetic appearance and shall not be physically prominent compared to other parts of structural components.

f) *Water tightness of joints* — In buildings, the external joints between precast elements should be water tight to ensure the durability requirements. If the joints are not water tight, it may lead to corrosion of reinforcing steel due to exposure to moisture thereby impacting the structural integrity. Also, water can enter inside the building and impact the functionality in service life of the building. In case of precast reinforced concrete wall buildings, joints of external walls, in addition to their structural efficiency, shall be watertight. For non-load bearing/façade walls the connections shall allow free movement of the walls due to temperature changes. This can be achieved by suitably shaping the joint or by scaling compounds. In load bearing external walls, the horizontal and vertical joints shall be filled with non-shrink non-metallic high strength cementitious grout followed by backer rod (bond breaker such as polyethylene film also can be used in place of backer rod) with sealant at the external side. The sealing compound shall be approved by the Engineer-in-Charge and shall have a long life to avoid frequent repair of the joints. It should be noted that the sealant is provided as an additional line of defense against water entry. In cases of moderate water exposure, the joints could be detailed with cement grout only with appropriate additional water proofing treatment instead of sealant (*see* **9.4**).

8.2 The following are the requirements of a structural joint:

a) It shall be capable of being designed to transfer the imposed load and moments with a known margin of safety;

b) It shall occur at logical locations in the structure and at points which may be most readily analyzed and easily reinforced;

c) It shall accept the loads without marked displacement or rotation and avoid high local stresses;

d) It shall accommodate tolerances in elements;

e) It shall require little temporary support, permit adjustment and demand only a few distinct operation to make;

f) It shall permit effective inspection and rectification;

g) It shall be reliable in service with other parts of the building; and

h) It shall enable the structure to absorb sufficient energy during earthquakes so as to avoid sudden failure of the structure (*see* Note). The joint should be ductile.

NOTE — If required, tests may be carried out on prototypes to assess against the above requirement.

8.2.1 Precast structures may have continuous or hinged connections subject to providing sufficient rigidity to withstand horizontal loading. When only compressive forces are to be taken, hinged joints may be adopted. In case of prefabricated concrete elements, load is transmitted *via* the concrete. When both compressive force and bending moment are to be taken, rigid or welded joints may be adopted; the shearing force is usually small in the column and can be taken up by the friction resistance of the joint. Here load transmission is accomplished by steel inserted parts together with concrete. In precast structures, it is critical to minimize

relative movements of precast components under loads. Hence, connection details that rely solely on the frictional resistance under gravity loads are not permitted. The connections shall be designed using either the pure shear capacity of the connection element or based on the shear friction theory that takes the advantage of the frictional resistance of concrete components under gravity loads.

8.2.2 When considering thermal shrinkage and heat effects, provision of freedom of movement or introduction of restraint may be considered.

8.3 Following connections and jointing techniques/ materials may be employed:

a) Welding of cleats or projecting steel,

b) Overlapping reinforcement, loops and linking steel grouted by concrete,

c) Reinforced concrete ties all round a slab,

d) Prestressing,

e) Epoxy grouting,

f) Cement/lime grout with non-shrink additive,

g) Polymer slurry grouting at dowel cast bolts and nuts connection,

h) Rebar fastener, chemical fastener and expansion fastener,

j) Reinforcement coupler,

k) Combination of the above, and

m) Any other method proven by test.

8.4 Precast Joint details

Some of the typical precast joint details have been illustrated in Fig. 7 to Fig. 24.

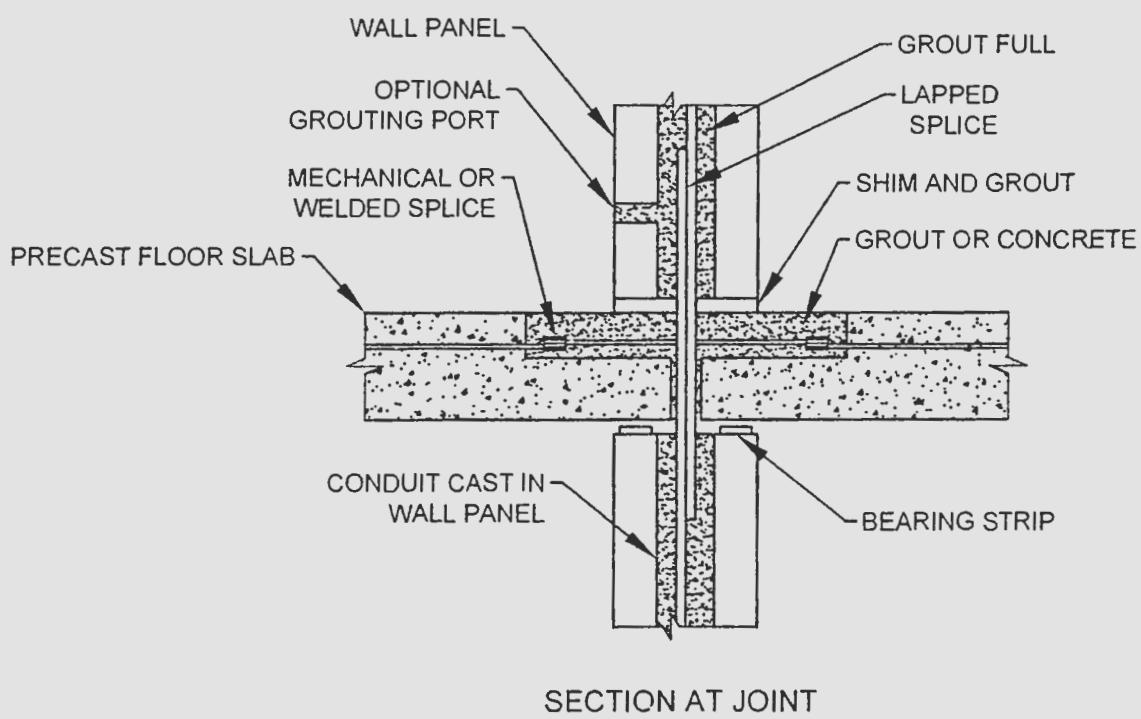

NOTE — Overlapping bars in grout-filled conduit are extended full-height through the structural element.

FIG. 7 LAPPED SPLICES IN LARGE CONDUIT

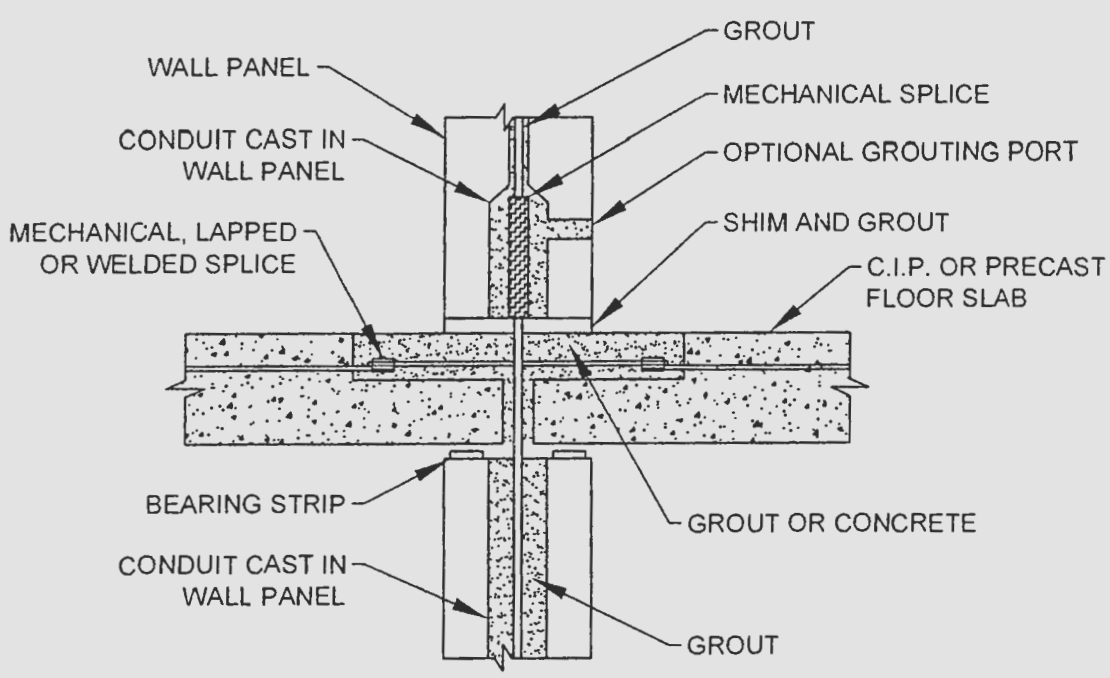

NOTE — Vertical bars in conduit are spliced and the system is grouted.

FIG. 8 MECHANICAL CONNECTION IN CONDUIT

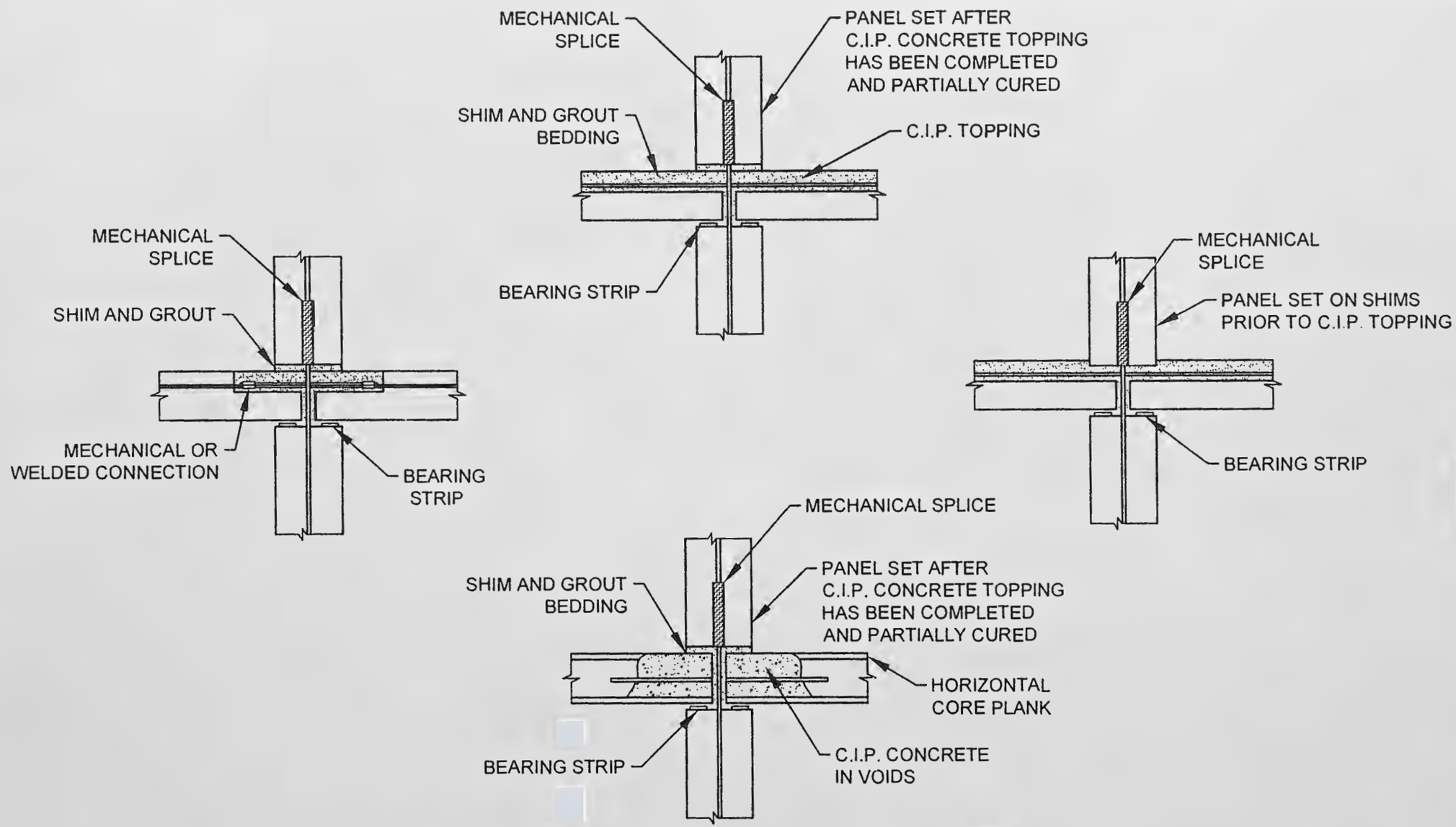

FIG. 9 DIFFERENT TYPES OF MECHANICAL SPLICES FOR CONNECTION OF VARIOUS CONFIGURATIONS OF PRECAST WALLS AND FLOORS

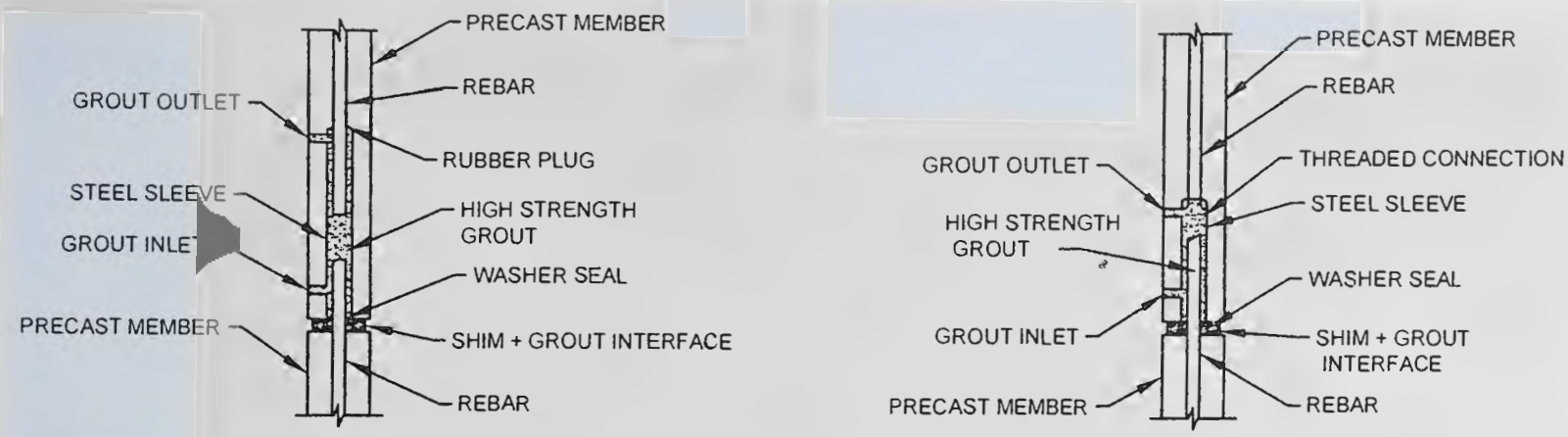

FIG. 10 SOME MECHANICAL SPLICES USING HIGH-STRENGTH NON-SHRINK GROUT

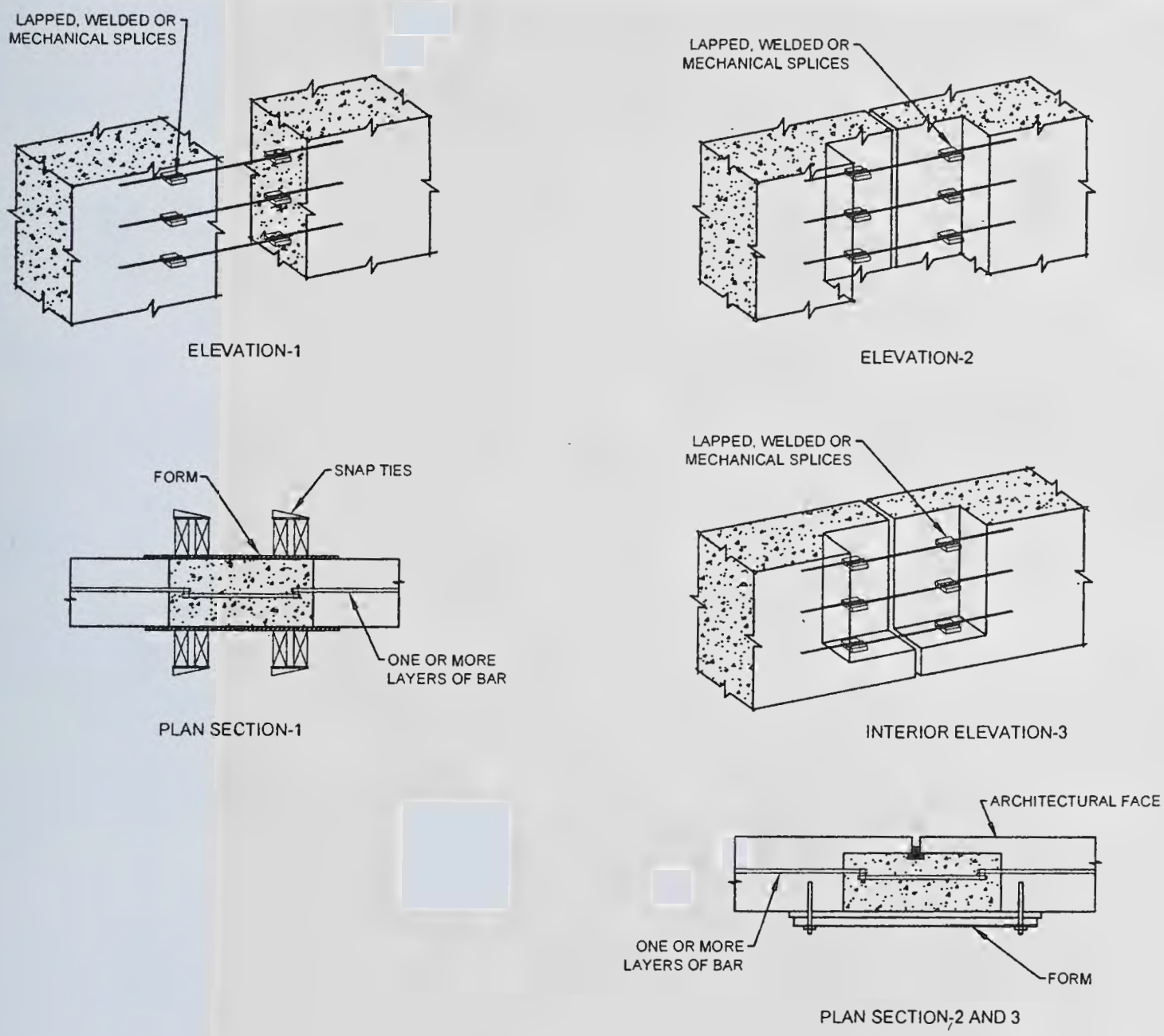

FIG. 11 VARIATIONS OF SPLICES AND CAST-IN-PLACE CLOSURE PLACEMENTS TO CREATE VERTICAL JOINTS BETWEEN PRECAST CONCRETE ELEMENTS

9 TESTS FOR COMPONENTS/STRUCTURES

9.1 Sampling Procedure

9.1.1 *Lot*

All the precast units of the same size, manufactured from the same material under similar conditions of production shall be grouped together to constitute a lot.

The number of units to be selected from each lot for dimensional requirements shall depend upon the size of the lot and shall be in accordance with col 2 and col 3 of Table 1.

The units shall be selected from the lot at random. In order to ensure the randomness of selection, reference may be made to good practice [6-7A(2)].

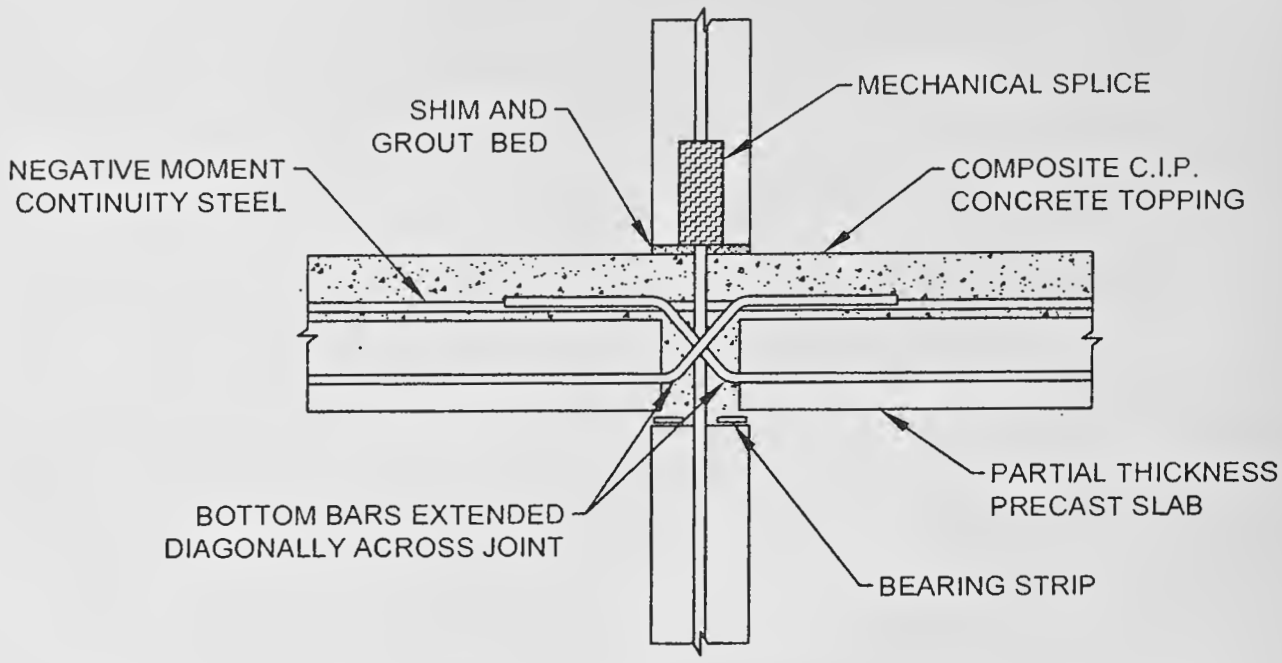

FIG. 12 FLOOR SLAB-TO-WALL DETAIL WHERE DIAGONAL DOWELS CROSS THE WALL JOINT INTO THE OPPOSITE FLOOR

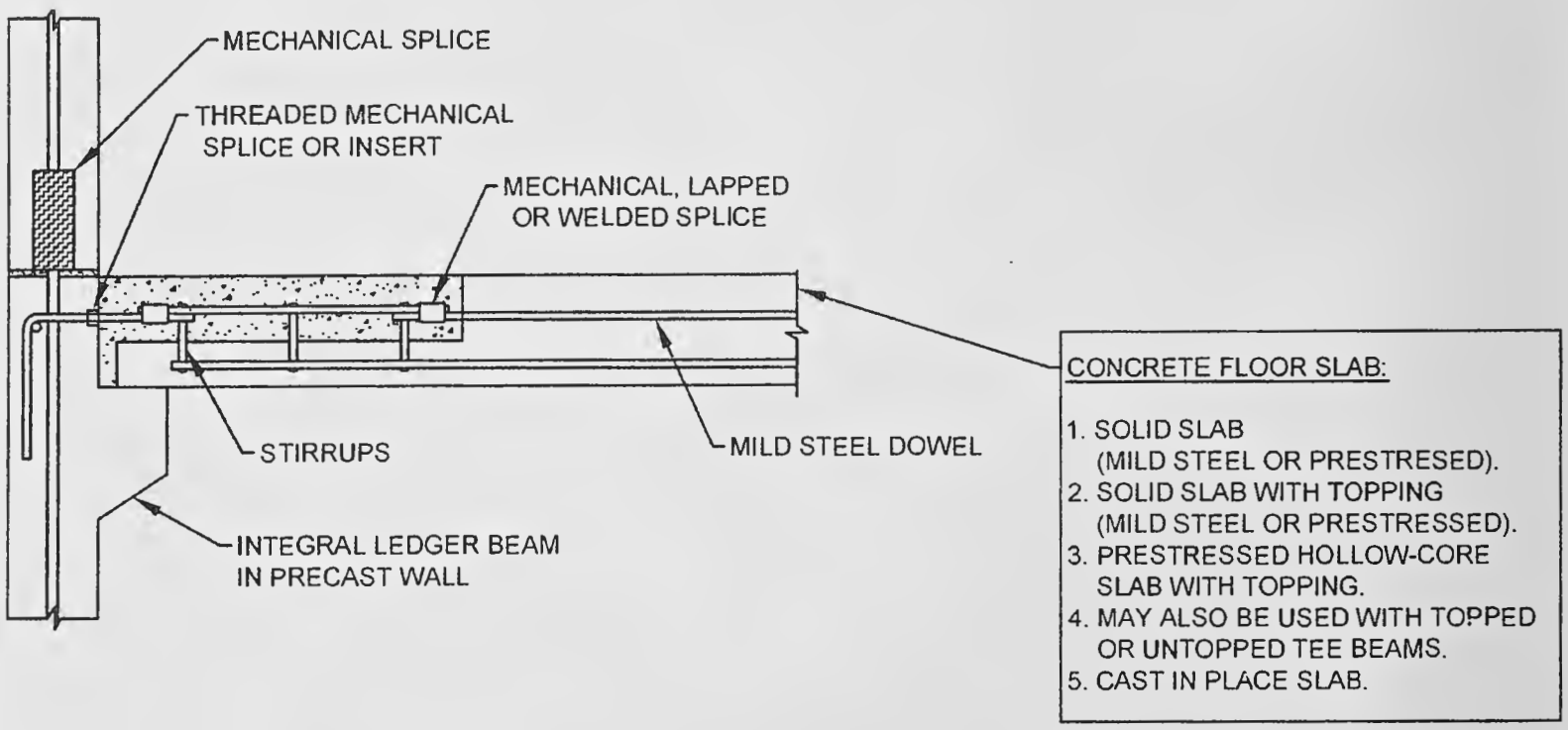

FIG. 13 END DETAIL OF A MONOLITHIC CONNECTION BETWEEN PRECAST CONCRETE FLOOR ELEMENT AND A PRECAST CONCRETE WALL

Table 1 Sample Size and Rejection Number
(*Clauses* 9.1.1 *and* 9.1.2)

Sl No.	Lot Size	First Sample Size	Second Sample Size	First Rejection Number	Second Rejection Number
(1)	(2)	(3)	(4)	(5)	(6)
i)	Up to 100	5	5	2	2
ii)	101 to 300	8	8	2	2
iii)	301 to 500	13	13	2	2
iv)	500 and above	20	20	3	4

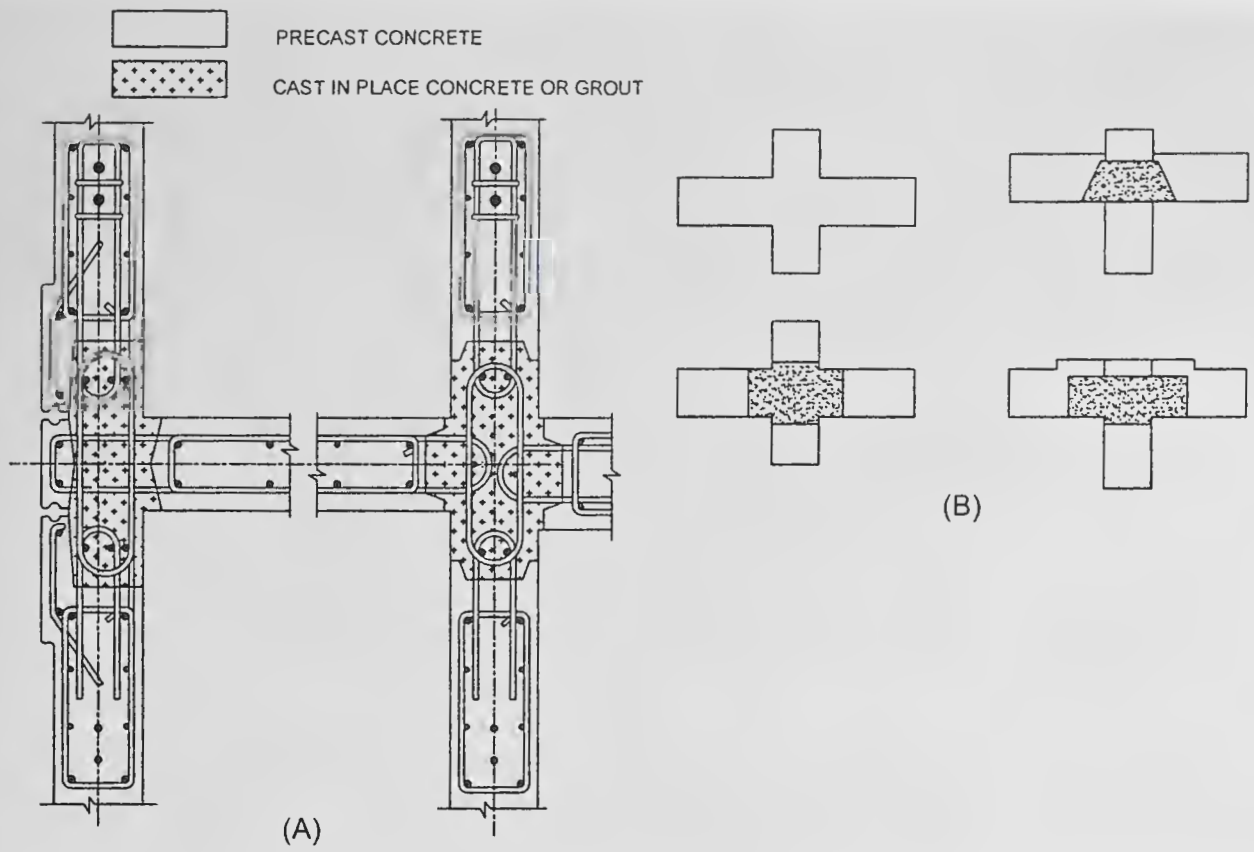

FIG. 14 (A) PLAN VIEW OF TYPICAL GROUTED OR CAST-IN-PLACE VERTICAL JOINTS IN SHEAR-WALL PANELS REINFORCED FOR HIGH SEISMIC LOADING (REFER TO ADJACENT PLAN VIEW FOR DIFFERENT CONFIGURATIONS); AND (B) VARIATIONS OF VERTICAL WALL-TO-WALL CONNECTIONS (PLAN VIEW)

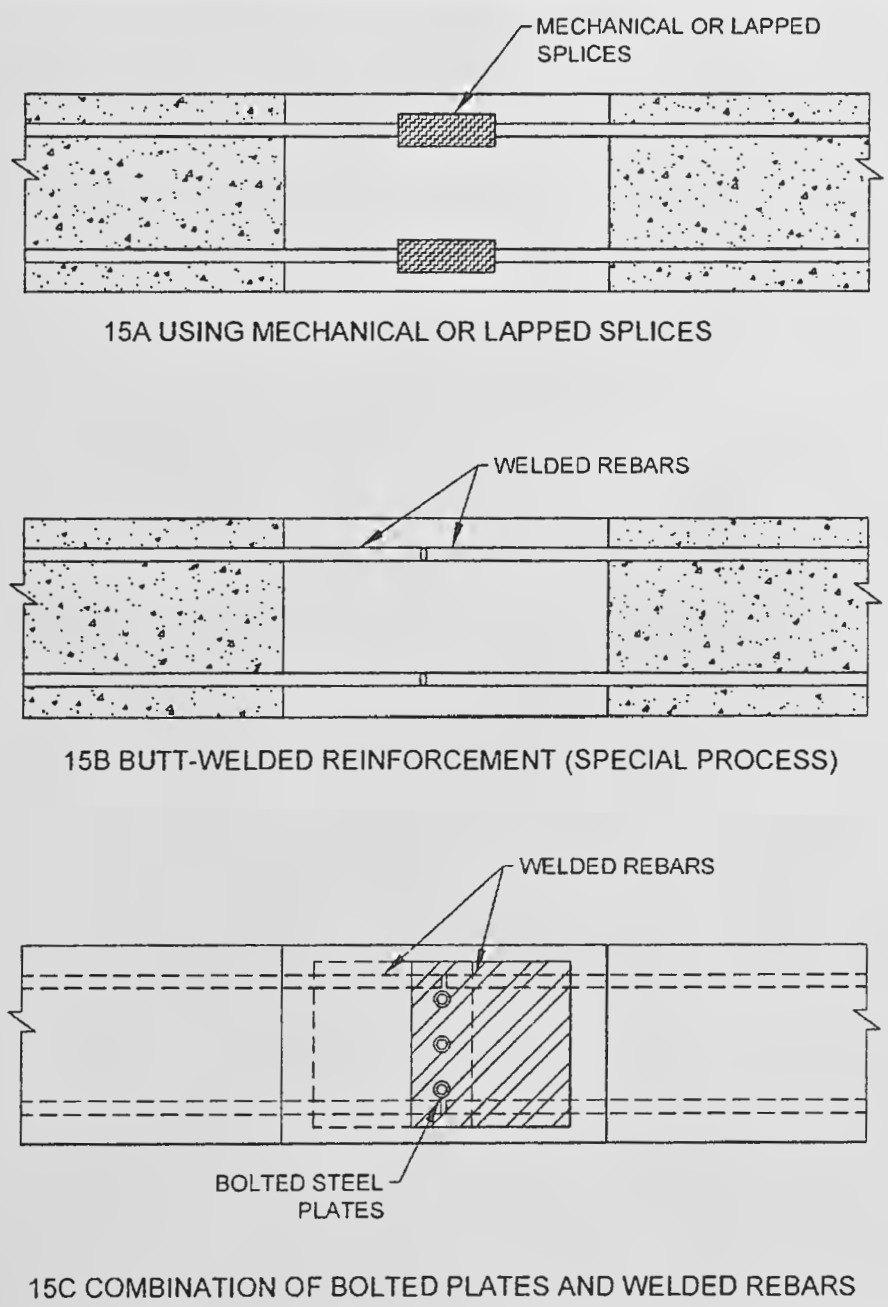

FIG. 15 HORIZONTAL CONNECTIONS BETWEEN BEAM OR GIRDER ENDS AT LOCATIONS OTHER THAN COLUMN FACES

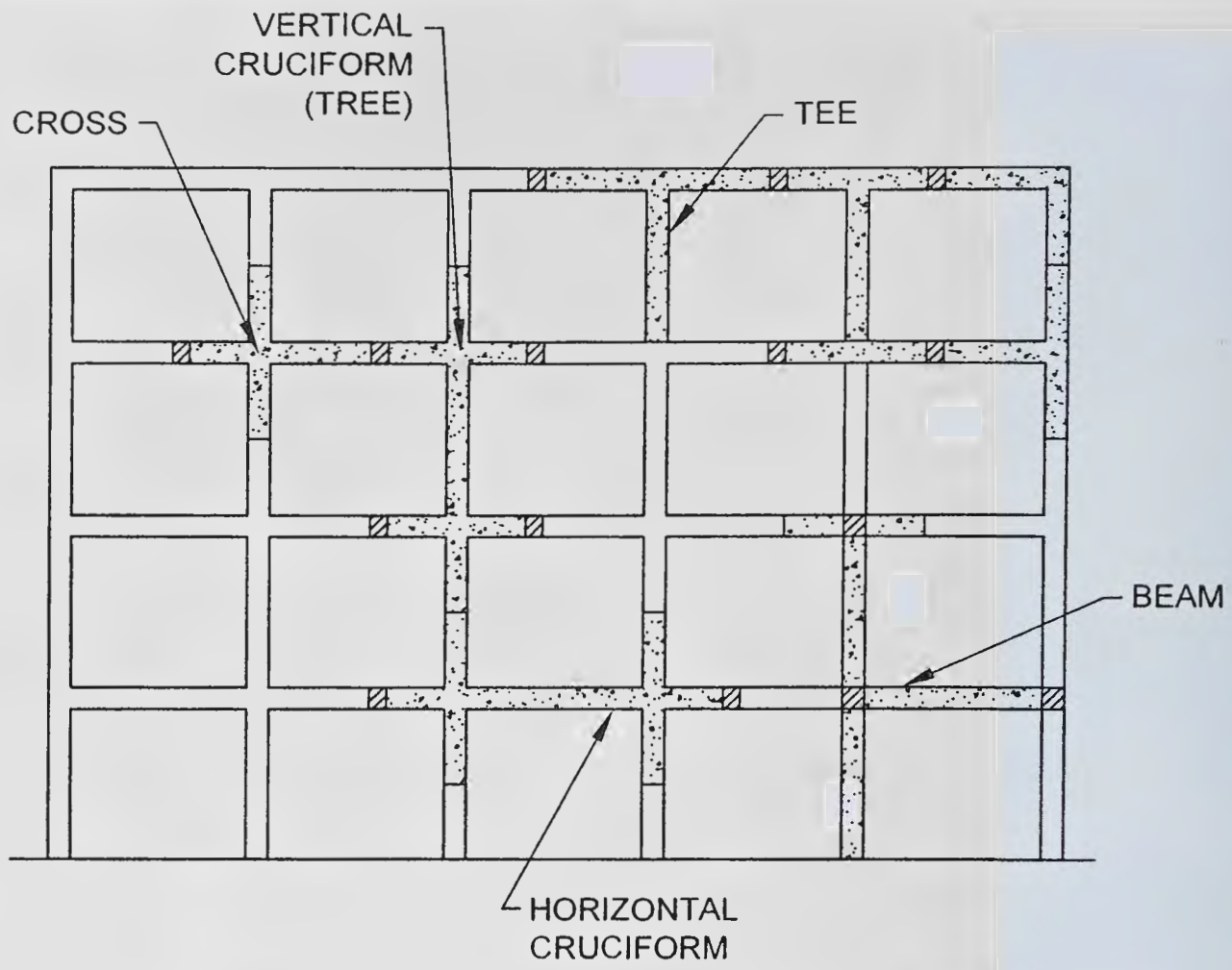

LEGEND

CAST IN PLACE CONCRETE

PRECAST CONCRETE

UNDEFINED

FIG. 16 VARIOUS CONFIGURATIONS OF PRECAST FRAME ELEMENTS

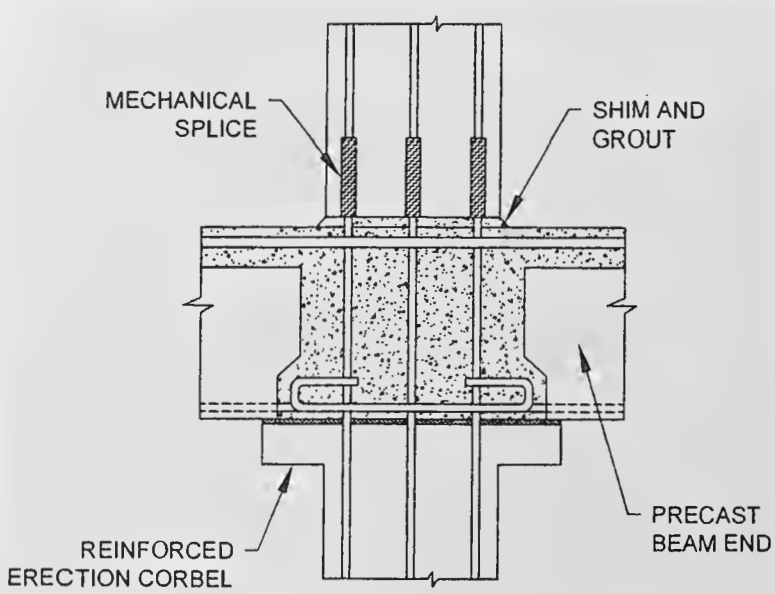

FIG. 17 CONNECTION AT BEAMS AND COLUMNS WITH CAST-IN PLACE CLOSURE

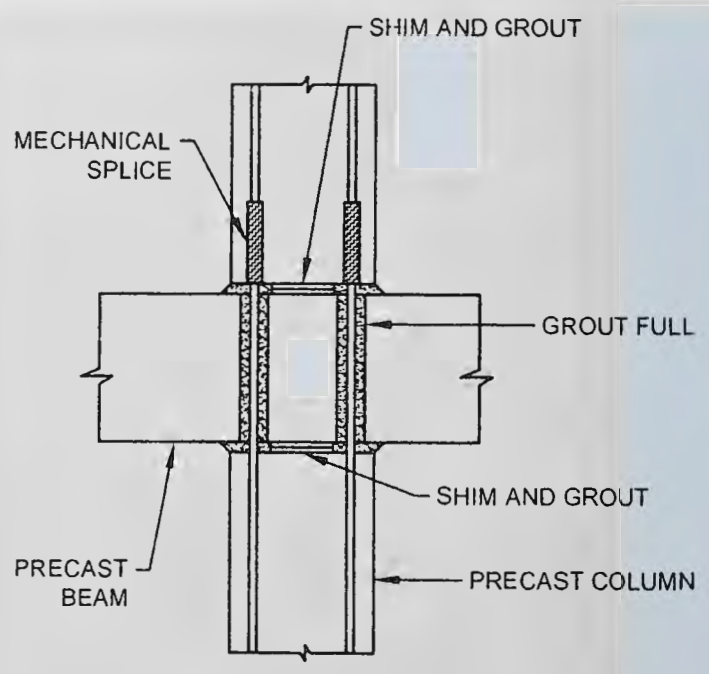

NOTE — Conduit diameter should be two to four times the bar diameter for tolerance in field erection.

FIG. 18 COLUMN-TO-COLUMN CONNECTION THROUGH CONDUITS INSTALLED IN A BEAM

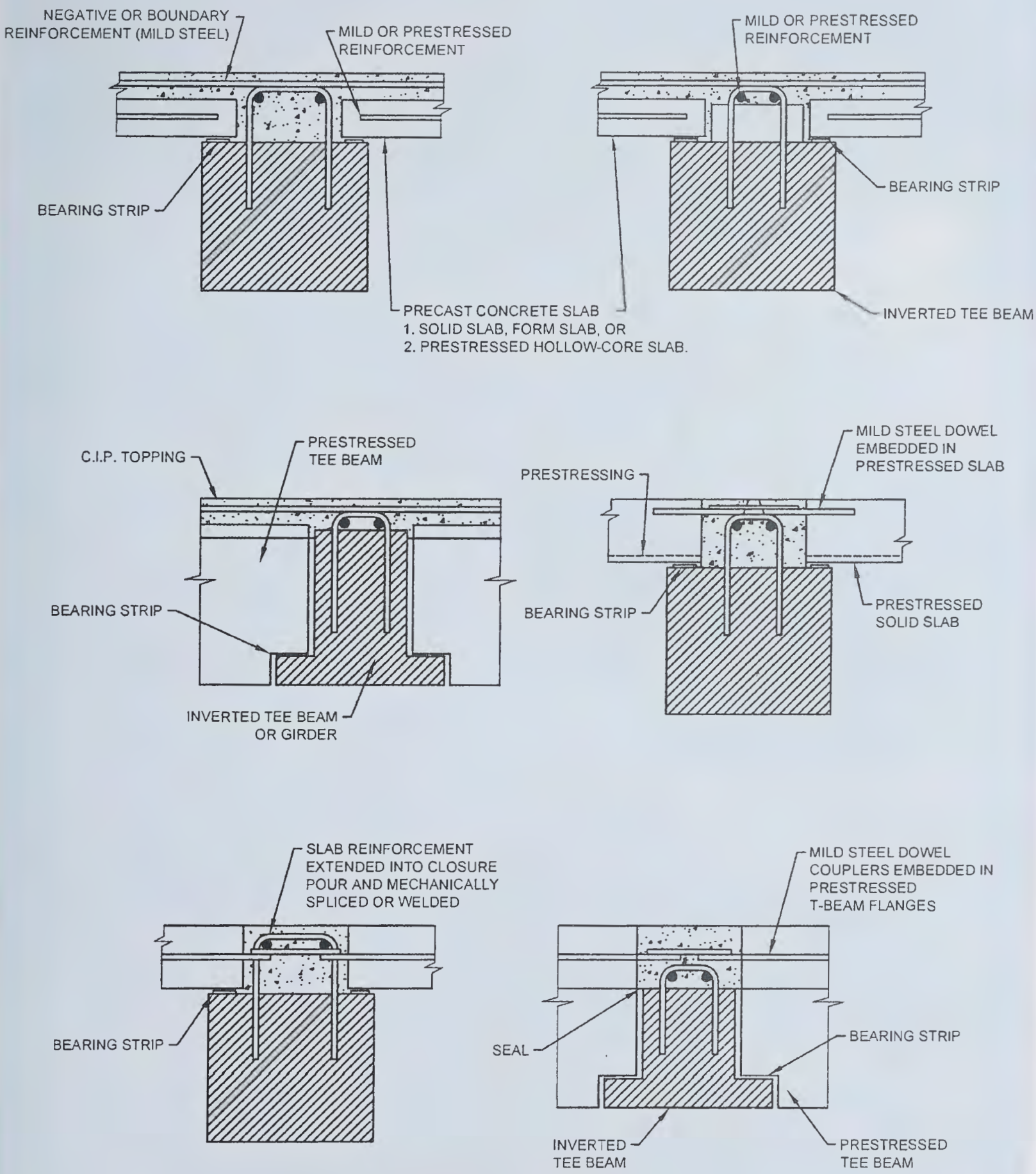

FIG: 19 TYPICAL END CONNECTIONS OF PRECAST CONCRETE FLOOR SLAB ELEMENTS

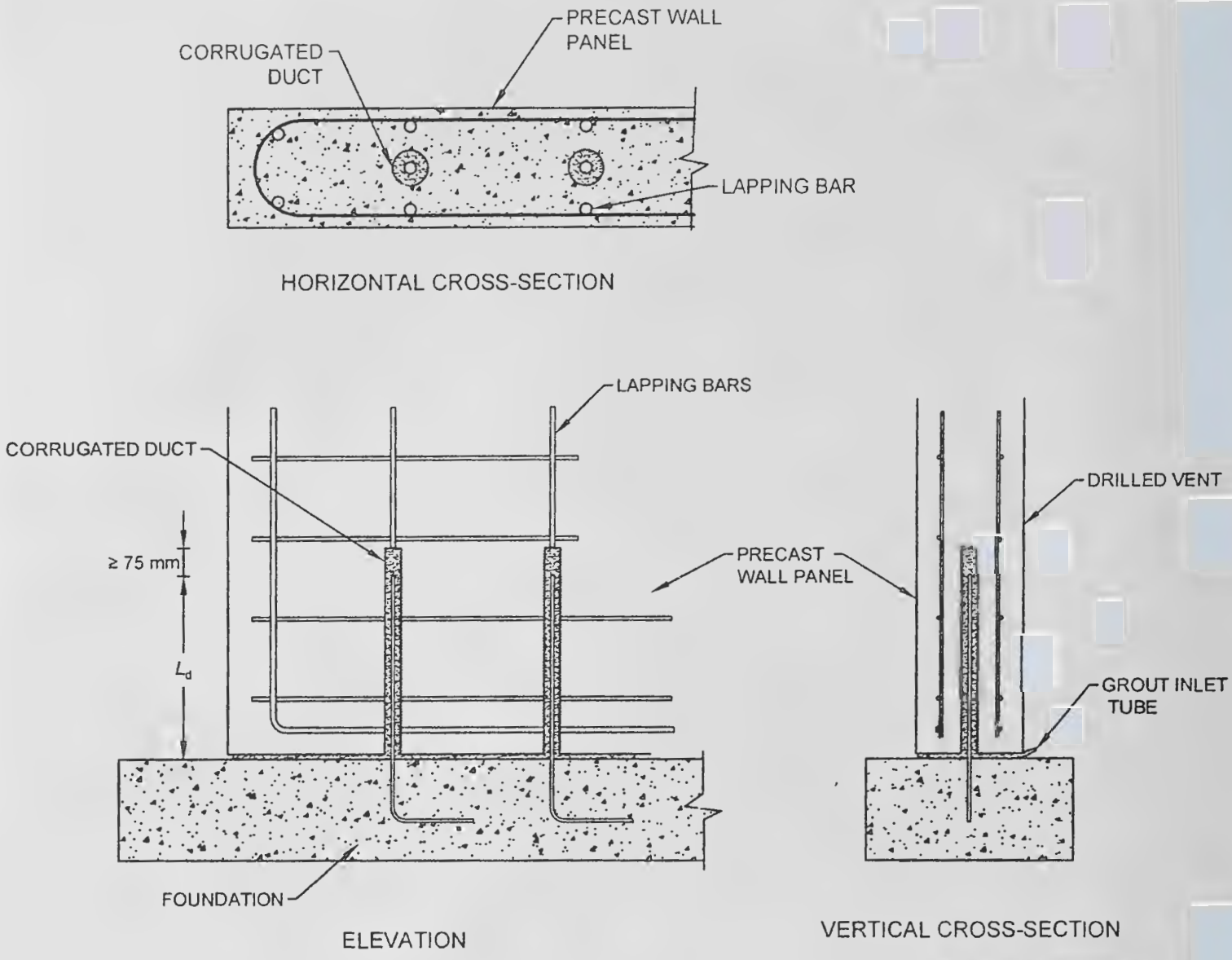

FIG. 20 WALL-FOUNDATION BEAM CONNECTION THROUGH GROUTED DUCTING

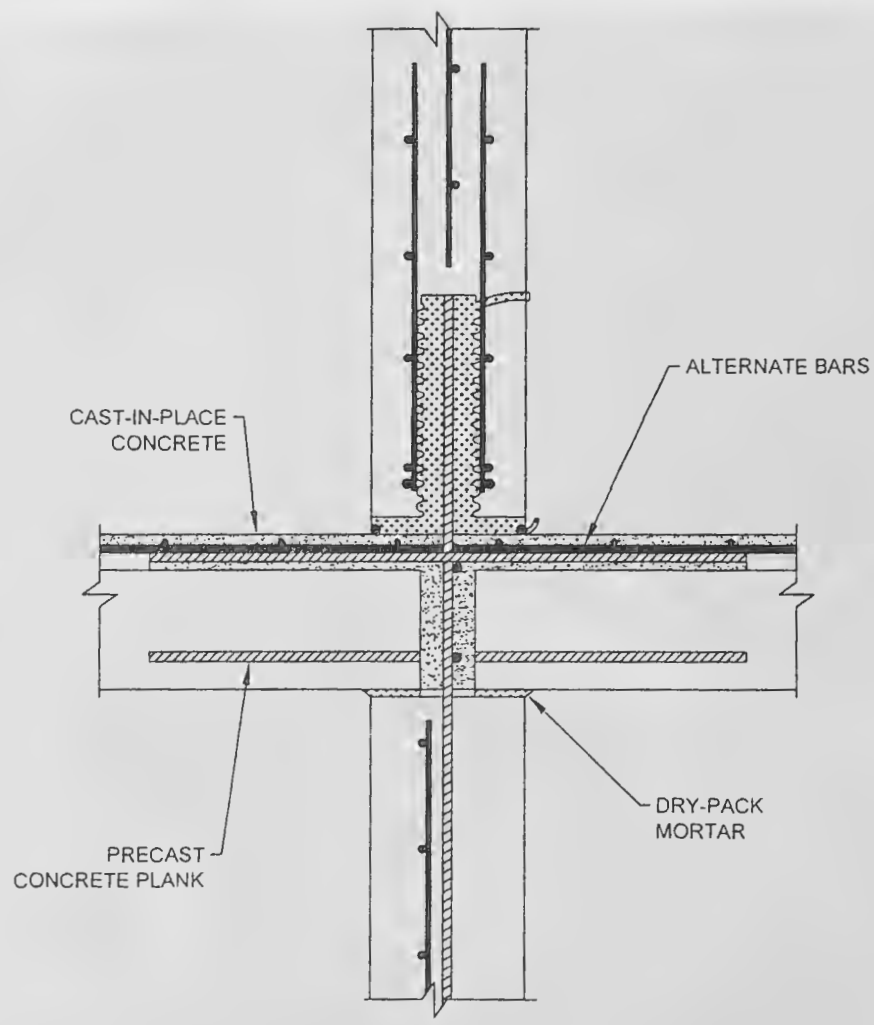

FIG. 21 INTERIOR WALL-FLOOR SLAB CONNECTION DETAIL: CONTINUOUS WALL

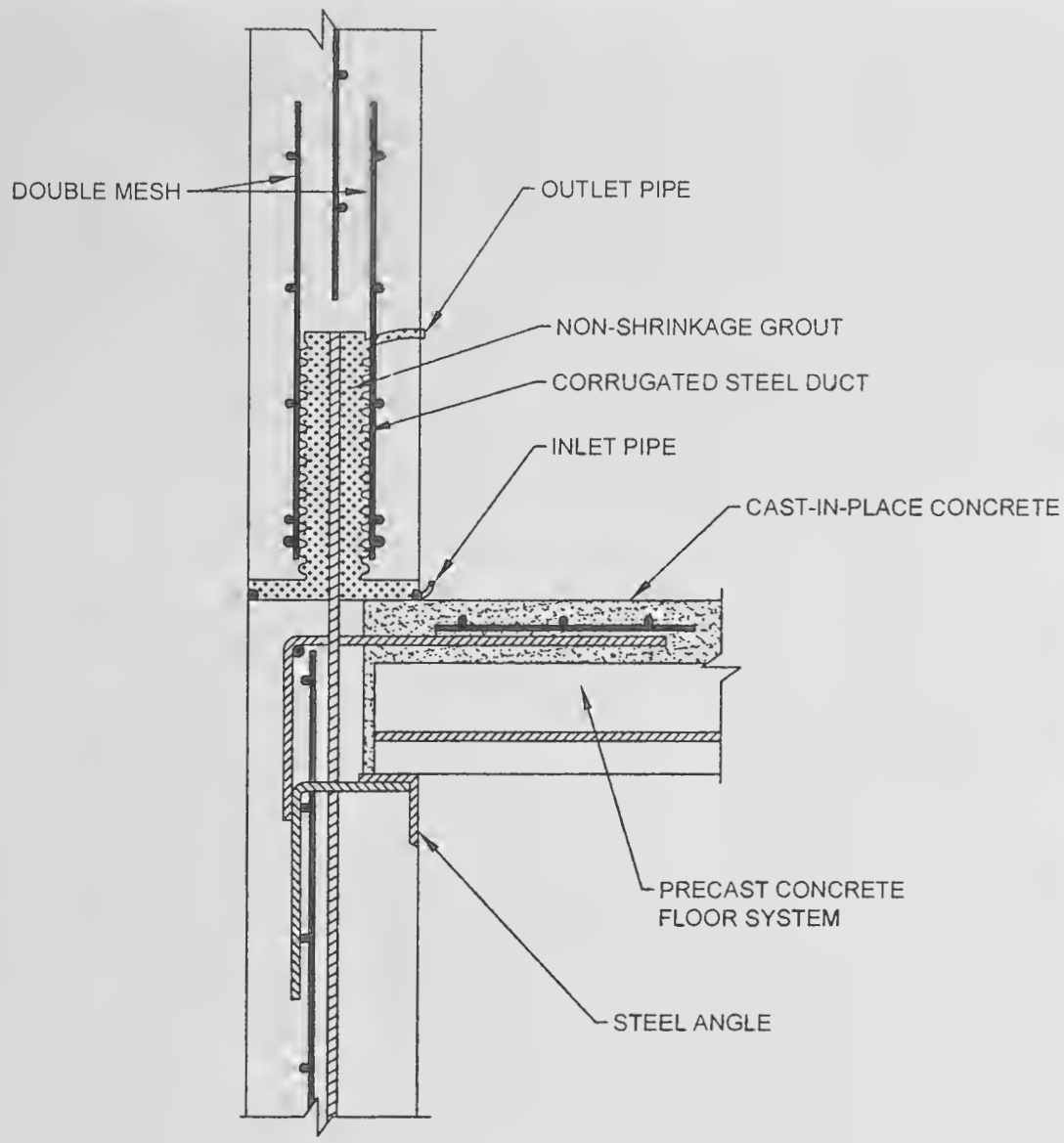

FIG. 22 EXTERIOR WALL-FLOOR SLAB CONNECTION DETAIL: PARTITIONED WALL WITH HORIZONTAL JOINT

9.1.2 *Number of Tests and Criteria for Conformity*

All the units selected at random in accordance with col 2 and col 3 of Table 1 shall be subjected to the dimensional requirements. A unit failing to satisfy any of the dimensional requirements shall be termed as defective. The lot shall be considered as conforming to the dimensional requirements if no defective is found in the sample, and shall be rejected if the number of defectives is greater than or equal to the first rejection number. If the number of defectives is less than the first rejection number the second sample of the same size as taken in the first stage shall be selected from the lot at random and subjected to the dimensional requirements. The number of defectives in the first sample and the second sample shall be combined and if the combined number of defectives is less than the second rejection number, the lot shall be considered as conforming to the dimensional requirements; otherwise not.

The lot which has been found as satisfactory with respect to the dimensional requirements shall then be tested for load test. For this purpose one unit shall be selected for every 300 units or part thereof. The lot shall be considered as conforming to the strength requirement if all the units meet the requirement; otherwise not.

9.2 Testing on Individual Components

The component should be loaded for 24 h at its full span with a total load (including its own self weight) of 1.25 times F_{lt}. At the end of this time it should not show any sign of weakness, faulty construction or excessive deflection. Its recovery 24 h after the removal of the test load, should not be less than 75 percent of the maximum deflection recorded during the test. If prestressed, it should not show any visible cracks up to working load and should have a recovery of not less than 85 percent in 1 h.

9.3 Load Testing of Structure or Part of Structure

Loading test on a completed structure should be made if required by the specification or if there is a reasonable doubt as to the adequacy of the strength of the structure.

9.3.1 In such tests, the structure should be subjected to full dead load of the structure plus an imposed load equal to 1.25 times the specified imposed load used in design, for a period of 24 h and then the imposed load shall be removed. During the tests, vertical struts equal

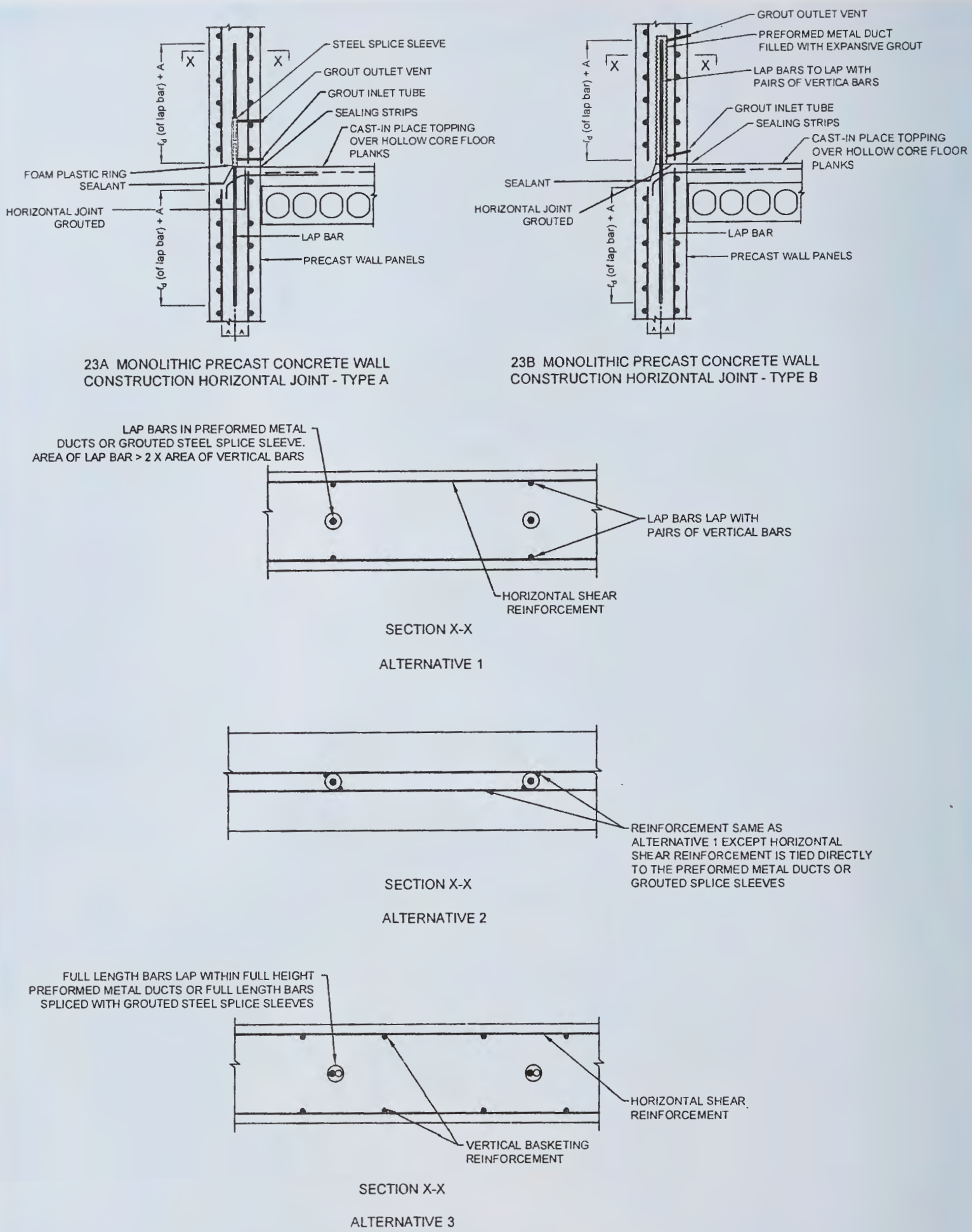

FIG. 23 MONOLITHIC PRECAST CONCRETE WALL CONSTRUCTION

in strength to take the whole load should be placed in position leaving a gap under the member.

NOTE — Dead load includes self weight of the structural members plus weight of finishes and walls or partitions, if any, as considered in the design.

9.3.1.1 If within 24 h of the removal of the load, a reinforced concrete structure does not show a recovery of at least 75 percent of the maximum deflection shown during the 24 h under load, test loading should be repeated after a lapse of 72 h. If the recovery is less than 80 percent in second test, the structure shall be deemed to be unacceptable.

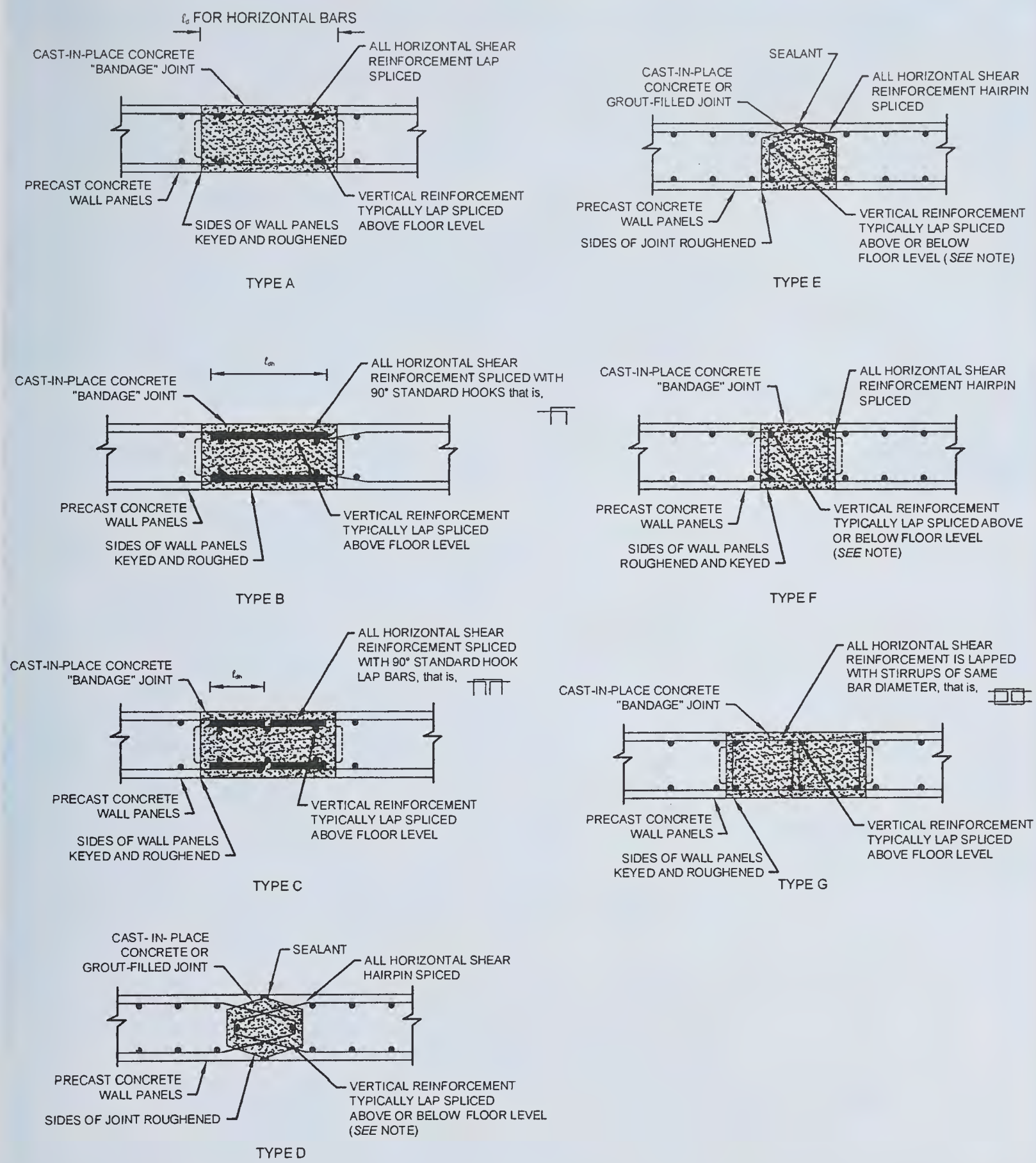

NOTE — Vertical joints shown as Types D, E and F need to be detailed with extreme care. Once the lapping bars have been overlapped the ability for lowering the wall panels over starter bars is very restricted. These details will typically work only when grouted steel splice sleeves are used to splice the vertical flexural reinforcement and when the laps of the vertical bars in the 'bandage' joints are made below floor level. Type D is not preferred because joint reinforcement and concrete infill cannot be inspected.

FIG. 24 MONOLITHIC PRECAST CONCRETE WALL CONSTRUCTION VERTICAL JOINTS

9.3.1.2 If within 24 h of the removal of the load, prestressed concrete structure does not show a recovery of at least 85 percent of the maximum deflection shown during the 24 h under load, the test loading should be repeated. The structure should be considered to have failed, if the recovery after the second test is not at least 85 percent of the maximum deflection shown during the second test.

9.3.1.3 If the maximum deflection, in mm, shown during 24 h under load is less than 40 l^2/D, where l is the effective span in m; and D, the overall depth of the section in mm, it is not necessary for the recovery to be measured and the recovery provisions of **9.3.1.1** and **9.3.1.2** shall not apply.

9.4 Testing of External Precast Wall/Facade Panels for Water Tightness

Any of the testing procedures given in **9.4.1** and **9.4.2** may be followed for testing of external wall/façade panel joints for water tightness.

9.4.1 *Testing Procedure 1*

9.4.1.1 *General*

If it is deemed necessary to demonstrate that the precast façade joints are adequate to resist water penetration, a water penetration test on a full scale panel including joint mock-ups could be undertaken.

9.4.1.2 *Test procedures*

Mock-up panels to be tested for water tightness should be subjected to both static and cyclic pressure in accordance with standard accepted procedures. Available international testing procedures are to be modified for local conditions as follows:

a) Differential test pressure shall be 20 percent of the maximum inward design wind load but not less than 0.77 kPa; and

b) The test shall be performed with water flow rate of 3.4 litre/min/m² for 15 min.

9.4.1.3 *Sampling for water penetration test*

Full scale water tightness testing on precast façade panels and joints should be carried out at the rate of 0.5 percent for each type of joint and combination of panels or one for each type of joint and precast unit, whichever is the greater.

9.4.1.4 *Failure criterion*

The façade units or joints are deemed to have failed if signs of water seepage through the joints or through the façade unit, including signs of damp patches, are observed during the test or within the subsequent 2 h after the test.

9.4.1.5 *Remedial action on failure*

Upon failure of a water penetration test on a precast façade system the cause of failure should be identified and the system revised and re-tested until a satisfactory test result is achieved. Modifications must be realistic in terms of job conditions and must maintain standards of quality and durability.

9.4.2 *Testing Procedure 2*

9.4.2.1 For external walls, a continuous jet of water shall be sprayed on the joint corresponding to 600 litre/h from a water hose having nozzle velocity of 2 m/s and a cone scatter of approximately 60° held at a distance of 1.2 m from the wall surface under test. The duration of the test shall not be less than 2 h. The hose shall be placed with the nozzle in line with the vertical joint and at a level of horizontal joints so that the jet cone will cover a vertical and two horizontal joints as shown in the drawings.

For external walls, the following tests shall be conducted for each building block:

Building Height	*Frequency of Tests*
Up to 10 storeys	5 tests each for vertical joints and horizontal joints
Up to 20 storeys	10 tests each for vertical joints and horizontal joints
Up to 30 storeys	15 tests each for vertical joints and horizontal joints
Up to 40 storeys	20 tests each for vertical joints and horizontal joints
Up to 50 storeys	25 tests each for vertical joints and horizontal joints

These tests shall be carried out at any location as instructed by the Engineer-in-Charge.

9.4.2.2 *Acceptance criterion*

Water shall not seep into any part of the building during the test.

9.4.2.3 *Remedial action on failure*

For each test which fails, two additional tests shall be carried out at joint locations as instructed by the Engineer-in-Charge, all at the contractor's cost and expense.

10 MANUFACTURE, STORAGE, TRANSPORT AND ERECTION OF PRECAST ELEMENTS

10.1 Manufacture of Precast Concrete Elements

10.1.1 A judicious location of precasting yard with concreting, initial curing (required for demoulding), storage facilities, suitable transporting and erection equipments and availability of raw materials are the crucial factors which should be carefully planned and

provided for effective and economic use of precast concrete components in constructions.

10.1.2 *Manufacture*

The manufacture of the components can be done in a factory for the commercial production established at the focal point based on the market potential or in a site precasting yard set up at or near the site of work.

10.1.2.1 *Factory prefabrication*

Factory prefabrication is resorted to in a factory for the commercial production for the manufacture of standardized components on a long term basis. It is a capital intensive production where work is done throughout the year preferably under a closed shed to avoid effects of seasonal variations. High level of mechanization can always be introduced in this system where the work can be organized in a factory-like manner with the help of a constant team of workmen.

10.1.2.2 *Site prefabrication*

In this scheme, prefabricated components are produced at site or near the site of work as possible.

This system is normally adopted for a specific job order of large scale that will continue over a long period. This option provides definite economy with respect to cost of transportation thereby improving productivity. Even though temporary, the factory established should be comparable to high capacity permanent factory with equivalent state-of-the-art degree of mechanization and quality control. Under this category there are two types, that is, semi-mechanized and fully-mechanized.

10.1.2.2.1 *Semi-mechanized*

The work is normally carried out in open space with locally available labour force or skilled labour force depending on project complexity. The equipment machinery used may be minor in nature and moulds are of mobile or stationary in nature.

10.1.2.2.2 *Fully-mechanized*

The work is carried out under a shed with skilled labour. The equipments used are similar to one of factory production. This type of precast yards will be set up for the production of precast components of high quality, high rate of production.

10.1.3 The various processes involved in the manufacture of precast elements may be classified as follows.

10.1.3.1 *Main process*

a) Providing and assembling the moulds, placing reinforcement cage in position for reinforced concrete work, and stressing the wires in the case of prestressed elements;
b) Putting concealed service conduits/pipes;
c) Fixing of inserts and tubes, where necessary (for handling);
d) Pouring the concrete (designed properly under strict quality control) into the moulds;
e) Vibrating the concrete and finishing;
f) Curing (steam curing, if necessary); and
g) Demoulding the forms and stacking the precast products.

10.1.3.2 *Auxiliary process*

Process, such as the following, necessary for the successful completion of the processes covered by the main process:

a) Mixing and manufacture of fresh concrete (done in a mixing station or by a batching plant);
b) Prefabrication of reinforcement cage (done in a steel yard or workshop);
c) Manufacture of inserts and other finishing items to be incorporated in the main precast products;
d) Finishing the precast products; and
e) Testing of products.

10.1.3.3 *Subsidiary process*

All other work such as the following, involved in keeping the main production work to a cyclic working:

a) Storage of materials;
b) Transport of cement and aggregates;
c) Transport of green concrete and reinforcement cages;
d) Transport of and stacking the precast elements;
e) Repairs and maintenance of tools, shackles and machines;
f) Repairs and maintenance of moulds;
g) Maintenance of curing yards; and
h) Generation of steam, etc.

10.1.4 For the manufacture of precast elements all the above processes shall be planned in a systematic way to achieve the following:

a) A cyclic technological method of working to bring in speed and economy in manufacture;
b) Mechanization of the process to increase productivity and to improve quality;
c) The optimum production satisfying the quality control requirements and to keep up the expected speed of construction aimed;
d) Better working conditions for the people on the job; and

e) Minimizing the effect of weather on the manufacturing schedule.

10.1.5 The various stages of precasting can be classified as in Table 2 on the basis of the equipment required for the various stages. This permits mechanization and rationalization of work in the various stages. In the precasting, stages 6 and 7 given in Table 2 form the main process in the manufacture of precast concrete elements. For these precasting stages there are many technological processes to suit the concrete product under consideration which have been proved rational, economical and time saving. The technological line or process is the theoretical solution for the method of planning the work involved by using machine complexes. Figure 25 illustrates diagrammatically the various stages involved in a plant process.

10.1.6 The various accepted methods of manufacture of precast units can be broadly classified into two methods:

a) The 'Stand Method' where the moulds remain stationary at places, when the various processes involved are carried out in a cyclic order at the same place, and

b) The 'Flow Method' where the precast unit under consideration is in movement according to the various processes involved in the work which are carried out in an assembly-line method.

The various accepted precasting methods are listed in Table 3 with details regarding the elements that can be manufactured by these methods.

10.2 Preparation and Storage of Materials

Storage of materials is of considerable importance in

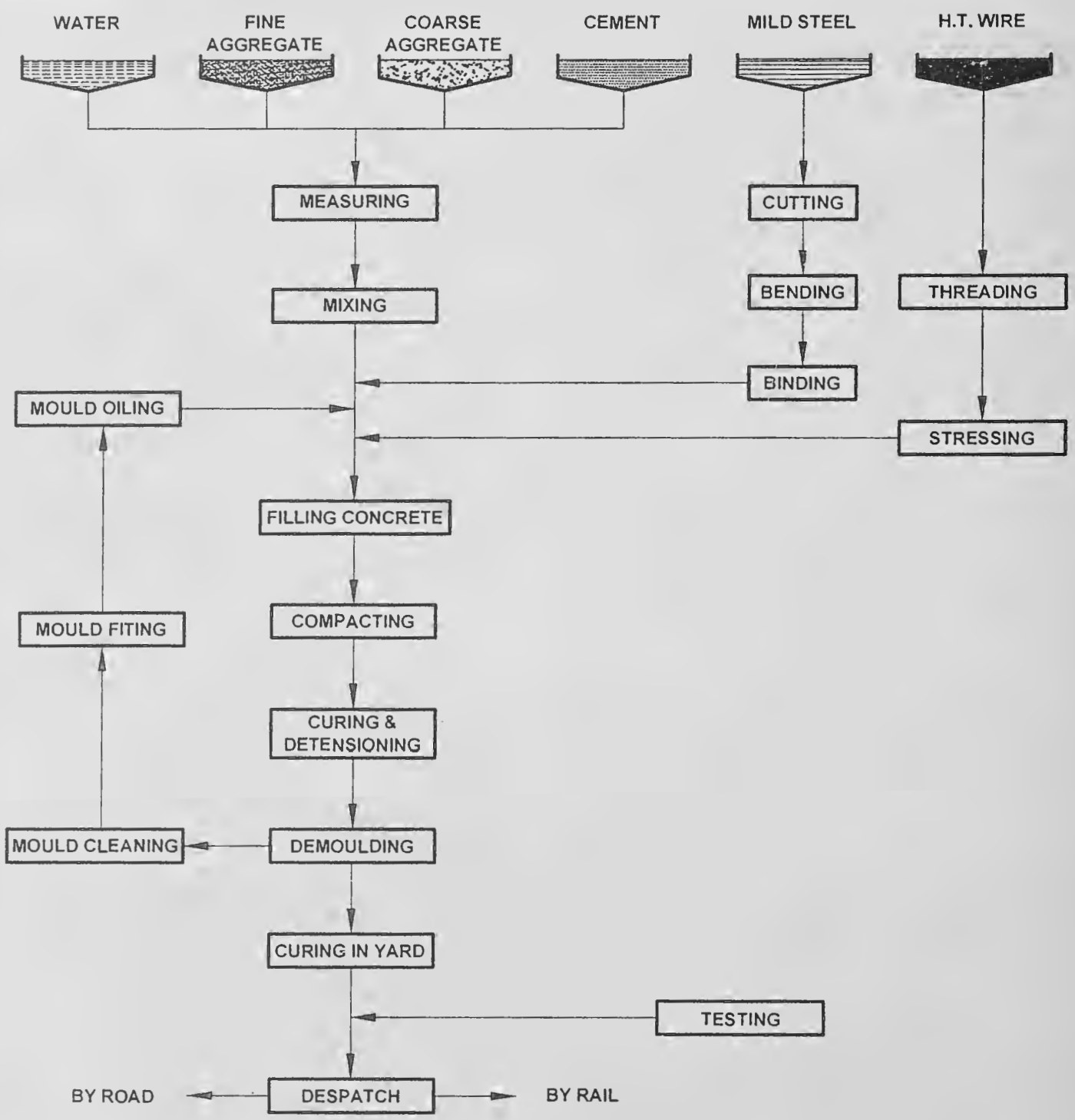

FIG. 25 PLANT PROCESS

Table 2 Stages of Precasting of Concrete Products

(*Clause* 10.1.5)

Sl No.	Precasting Stage No.	Name of Process	Operations Involved
(1)	(2)	(3)	(4)
i)	1	Procurement and storage of construction materials	Unloading and transport of cement. coarse and fine aggregates and steel, and storing them in bins, silos or storage sheds
ii)	2	Testing of materials	Testing of all materials including steel
iii)	3	Design of concrete mix	Testing of raw materials, plotting of grading curves and trial of mixes in laboratory
iv)	4	Making of reinforcement cages	Unloading of reinforcement bars from wagons or lorries and stacking them in the steel yard, cutting, bending, tying or welding the reinforcements and making in the form of a cage, which can be directly introduced into the mould
v)	5	Applying form release agent and laying of moulds in position	Moulds are cleaned, applied with form release agent and assembled and placed at the right place
vi)	6	Placing of reinforcement cages, inserts and fixtures	The reinforcement cages are placed in the moulds with spacers, etc as per data sheet prepared for the particular prefabricate
vii)	7	Preparation of green concrete	Taking out aggregates and cement from bins, silos, etc, batching and mixing
viii)	8	Transport of green concrete	Transport of green concrete from the mixer to the moulds. In the case of precast method involving direct transfer of concrete from mixer to the mould or a concrete hopper attached to the mould this prefabrication stage is not necessary
ix)	9	Pouring and consolidation of concrete	Concrete is poured and vibrated to a good finish
x)	10	Curing of concrete and demoulding	Either a natural curing with water or an accelerated curing using steam curing and other techniques. In the case of steam curing using trenches or autoclaves, this stage involves transport of moulds with the green concrete into the trench or autoclave and taking them out after the curing and demoulding elements. Cutting of protruding wires also falls in this stage In certain cases the moulds have to be partly removed and inserts, have to be removed after initial set. The total demoulding is done after a certain period and the components are then allowed to be cured. All these fall in this operation
xi)	11	Stacking of precast elements	Lifting of precast elements from the mould and transporting to the stacking yard for further transport by trailer or rail is part of this stage
xii)	12	Testing of finished components	Tests are carried out on the components individually and in combination to ensure the adequacy of their strength
xiii)	13	Miscellaneous	a) Generation of steam involving storing of coal or oil necessary for generation of steam and providing insulated steam pipe connection up to the various technological lines b) Repair of machines used in the production

the precasting industry, as a mistake in planning in this aspect can greatly influence the economics of production. From experience in construction, it is clear that there will be very high percentages of loss of materials as well as poor quality due to improper storage and transport. So, in a precast factory where everything is produced with special emphasis on quality, proper storage and preservation of building materials, especially cement, coarse and fine aggregates, is of prime importance. Storage of materials shall be done in accordance with Part 7 'Construction Management, Practices and Safety' of the Code. Also, precast elements be subjected to 'first-in first-out' to minimize and or avoid issues relating to shrinkage, creep, etc.

10.3 Moulds

10.3.1 Moulds for the manufacture of precast elements may be of steel, timber, concrete and plastic or a combination thereof. For the design of moulds for the various elements, special importance should be given to easy demoulding and assembly of the various parts. At the same time rigidity, strength and water-tightness of the mould, taking into consideration forces due to pouring of green concrete and vibrating, are also important.

10.3.2 *Tolerances*

The moulds have to be designed in such a way to take into consideration the tolerances given in **5.2**.

Table 3 Precasting Methods
(*Clauses* 10.1.6 *and* 10.9.1)

Sl No.	Precasting Method	Where Used	Recommended Dimensions and Weights	Advantages and Remarks
(1)	(2)	(3)	(4)	(5)
i)	*Individual mould method* — Precasting method using mould which may be easily assembled out of bottom and sides, transportable, if necessary. This may be either in timber or in steel using needle or mould vibrators and capable of taking prestressing forces	a) Ribbed slabs, beams, girders, window panels, box type units and special elements b) Prestressed railway sleepers, parts of pre-stressed girders, etc	No limit in size and weight. Depends on the equipment used for demoulding, transporting and placing	a) Strengthening of the cross-section possible b) Openings are possible in two planes
ii)	*Battery form method* – The shuttering panels may be adjusted into the form of a battery at the required distances equal to the thickness of the concrete member	Interior wall panels, shell elements, reinforced concrete battens, rafters, purlins and, roof and floor slabs	a) Length : 18 m b) Breadth : 3 m c) Mass : 5 t	Specially suitable for mass production of wall panels where shuttering cost is reduced to a large extent and autoclave or trench steam curing may be adopted by taking the steam pipes through the shuttering panels.
iii)	*Stack method*	Floor and roof slab panels	a) Length : Any desired length b) Breadth : 1 to 4 m c) Mass : 5 t	For casting identical reinforced or prestressed panels one over the other with separating media interposed in between.
iv)	*Tilting mould method* – This method is capable of being skipped vertically using hydraulic jacks	Exterior wall panels where special finishes are required on one face or for sandwich panel	a) Length : 6 m b) Breadth : 4 m c) Mass : 5 t	Suitable for manufacturing the external wall panels
v)	*Long line prestressing bed method*	Double tees, ribbed slabs, purlins, piles and beams	a) Length : Any desired b) Breadth : 2 m c) Height : 2 m d) Mass : Up to 10 t	Ideally suited for pretension members
vi)	*Extrusion method* – Long concrete mould with constant cross section where concreting and vibration are done automatically just as in hollow code slab casting	Roof slabs, foam concrete wall panels and beams cross-section where concreting and vibration are done automatically just as in hollow cored slab casting	a) Length : Any desired b) Breadth : Less than 2 m c) Height : Less than 3 m	May be used with advantage in the case of un-reinforced blocks, foam concrete panels

10.3.3 *Slopes of the Mould Walls*

For easy demoulding of the elements from the mould with fixed sides, the required slopes have to be maintained. Otherwise there is a possibility of the elements getting stuck up with the mould at the time of demoulding.

10.4 Accelerated Hardening

In most of the precasting factories, it is economical to use faster curing methods or artificial curing methods, which in turn will allow the elements to be demoulded much earlier permitting early re-use of the forms. Any of the following methods may be adopted:

a) *By heating the aggregates and water before mixing the concrete* — By heating of the aggregates as well as water to about 70°C to 80°C before making the concrete mix and placing the same in the moulds, sufficiently high earlier strengths are developed to allow the elements to be stripped and transported.

b) *Steam curing* — Steam curing may be done under high pressure and high temperature in an autoclave. This technique is more suited to smaller elements. Alternatively, this could be done using low pressure steam having temperature around 80°C. This type of curing shall be done as specified in **10.5.2**. For light weight concrete products when steam cured under high pressure, the drying shrinkage is reduced considerably. Due to this reason, high pressure steam curing in autoclave is specified for light weight low densities ranging from 300 to 1 000 kg/m^3. For normal (heavy) concretes as well as light weight concretes of higher densities, low pressure steam curing

may be desirable as it does not involve using high pressures and temperatures requiring high investment in an autoclave (*see also* **10.5.2**).

c) *Steam injection during mixing of concrete* — In this method low pressure saturated steam is injected into the mixer while the aggregates are being mixed. This enables the heating up of concrete to approximately 60°C. Such a concrete after being placed in the moulds attains high early strength.

d) *Heated air method* — In this method, the concrete elements are kept in contact with hot air with a relative humidity not less than 80 percent. This method is specially useful for light weight concrete products using porous coarse aggregates.

e) *Hot water method* — In this method, the concrete elements are kept in a bath of hot water around 50°C to 80°C. The general principles of this type of curing are not much different from steam curing.

f) *Electrical method* — The passage of current through the concrete panels generates heat through its electro-resistivity and accelerates curing. In this method, the concrete is heated up by an alternating current ranging from 50 V for a plastic concrete and gradually increasing to 230 V for the set concrete. This method is normally used for massive concrete products.

10.4.1 After the accelerated hardening of the above products by any of the above accepted methods, the elements shall be cured further by normal curing methods to attain full final strength.

10.4.2 Accelerated hardening may also be achieved by the following techniques:

a) *Construction chemicals* — Suitable construction chemicals may be used.

b) *Consolidation by spinning* — Such a method is generally used in the centrifugal moulding of pipes and such units. The spinning motion removes excess water, effects consolidation and permits earlier demoulding.

c) *Pressed concrete* — This method is suitable for fabrication of small or large products at high speed of production. A 100 to 200 t press compresses the wet concrete in rigid moulds and expels water. Early handling and a dense wear resistant concrete is obtained.

d) *Vacuum treatment* — This method removes the surplus air and water from the newly placed concrete as in slabs and similar elements. A suction up to about 70 percent of an atmosphere is applied for 20 to 30 min/cm thickness of the units.

e) *Consolidation by shock* — This method is suitable for small concrete units dropped repeatedly from a height in strong moulds. The number of shocks required to remove excess water and air may vary from 6 to 20 and the height of lift may be up to as much as half the depth of the mould.

10.4.3 After the accelerated curing of the above products by any of the above accepted methods, the elements shall be cured further by normal curing methods to attain full final strength.

10.5 Curing

10.5.1 The curing of the prefabricated elements can be effected by the normal methods of curing by sprinkling water and keeping the elements moist. This can also be done in the case of smaller elements by immersing them in a specially made water tanks.

10.5.2 *Steam Curing*

10.5.2.1 The steam curing of concrete products shall take place under tarpaulin in tents, under hoods, under chambers, in tunnels or in special autoclaves. The steam shall have a uniform quality throughout the length of the member. The precast elements shall be so stacked, with sufficient clearance between each other and the bounding enclosure, so as to allow proper circulation of steam.

Before the concrete products are subjected to any accelerated method of curing, the cement to be used shall be tested in accordance with accepted standards (*see* Part 5 'Building Materials' of the Code) especially for soundness, setting time and suitability for steam curing.

In the case of elements manufactured by accelerated curing methods, concrete admixtures to reduce the water content may be allowed to be used. The normal aeration agents used to increase the workability of concrete should not be allowed to be used. Use of calcium chloride based admixtures should not be used for reinforced concrete elements so as to meet the chloride limits prescribed in Part 6 'Structural Design, Section 5 Concrete, Subsection 5A Plain and Reinforced Concrete' of the Code.

10.5.2.2 The surrounding walls, the top cover and the floor of steam curing chamber or tunnel or hood shall be so designed as not to allow more than 1 kcal/m^2/h°C.

10.5.2.3 The inside face of the steam curing chamber, tunnel or hood shall have a damp-proof layer to maintain the humidity of steam. Moreover, proper slope shall be given to the floor and the roof to allow the condensed water to be easily drained away. At first, when steam is let into the curing chambers, the air inside shall be allowed to go out through openings provided in the hoods or side walls which shall be closed soon after moist steam is seen jetting out.

10.5.2.4 It is preferable to let in steam at the top of the chamber through perforated pipelines to allow uniform entry of steam throughout the chamber.

10.5.2.5 The fresh concrete in the moulds should be allowed to get the initial set before allowing the concrete to come into contact with steam. The regular heating up of fresh concrete product from about 20°C to 35°C should start only after a waiting period ranging from 2 h to 5 h depending on the setting time of cement used. It may be further noted that steam can be let in earlier than this waiting period provided the temperature of the concrete product does not rise beyond 35°C within this waiting period.

10.5.2.6 The second stage in steam curing process is to heat up the concrete elements, moulds and the surroundings in the chamber,

a) in the low pressure steam curing the airspace around the member is heated up to a temperature of 75°C to 80°C at a gradual rate, usually not faster than 30°C/h (this process takes around 1 h to 1½ h depending upon outside temperature); and

b) in the case of curing under high pressure steam in autoclaves, the temperature and pressure are gradually built up during a period of about 4 h.

10.5.2.7 The third stage of steam curing is to maintain the uniform temperature and pressure for a duration depending upon thickness of the section. This may vary from 3 h to 5½ h in the case of low pressure steam curing and 4 h to 7 h in the case of high pressure steam curing.

10.5.2.8 The fourth stage of steam curing is the gradual cooling down of concrete products and surroundings in the chamber and normalization of the pressure to bring it at par with outside air. The maximum cooling rate, which is dependent on the thickness of the member, should normally not exceed 30°C/h.

10.5.3 In all these cases, the difference between the temperature of the concrete product and the outside temperature should not be more than 60°C for concretes up to M 30 and 75°C for concretes greater than M 45. In the case of light weight concrete, the difference in temperature should not be more than 60°C for concretes less than M 25. For concretes greater than M 50, the temperature differences can go up to 75°C.

10.6 Stacking During Transport and Storage

Every precaution shall be taken against overstress or damage, by the provision of suitable packings at agreed points of support. Particular attention is directed to the inherent dangers of breakage and damage caused by supporting other than at two positions, and also by the careless placing of packings (for example, not vertically one above the other). Ribs, corners and intricate projections from solid section should be adequately protected. Packing pieces shall not discolour, disfigure or otherwise permanently cause mark on units or members. Stacking shall be arranged or the precast units should be protected, so as to prevent the accumulation of trapped water or rubbish, and if necessary to reduce the risk of efflorescence.

10.6.1 The following points shall be kept in view during stacking:

a) Care should be taken to ensure that the flat elements are stacked with right side up. For identification, top surfaces should be clearly marked.

b) Stacking should be done on a hard and suitable ground to avoid any sinking of support when elements are stacked.

c) In case of horizontal stacking, packing materials shall be at specified locations and shall be exactly one over the other to avoid cantilever stress in panels.

d) Components should be packed in a uniform way to avoid any undue projection of elements in the stack which normally is a source of accident.

e) In general, vertical stacking should be limited to 6-10 components. Where the ground is only compacted, the maximum ground load at support should be restricted to 15 t/m^2 and the stacking should be restricted to 6 panels. Where PCC layer is poured, the maximum ground load at support should be restricted to 30 t/m^2 and the stacking should be restricted to 10 panels. In both cases, the ground should be fairly levelled and the supports should be continuous along the width of the panels.

10.7 Handling Arrangements

10.7.1 Lifting and handling positions shall be clearly defined particularly where these sections are critical. Where necessary special facilities, such as bolt holes or projecting loops, shall be provided in the units and full instructions supplied for handling. For the purpose of testing the bolts/hooks, bond strength shall be the criteria for embedded bolts and bearing strength for through bolts. For bond strength, pull out test of concrete shall be carried out. *See* **10.11** for additional design considerations.

10.7.2 For precast prestressed concrete members, the residual prestress at the age of particular operation of handling and erection shall be considered in

conjunction with any stresses caused by the handling or erection of member. The compressive stress thus computed shall not exceed 50 percent of the cube strength of the concrete at the time of handling and erection. Tensile stresses up to a limit of 50 percent above those specified in Part 6 'Structural Design, Section 5 Concrete, Subsection 5A Plain and Reinforced Concrete' of the Code shall be permissible.

10.8 Identification and Marking

All precast units shall bear an indelible identification, location and orientation marks as and where necessary. The date of manufacture shall also be marked on the units.

10.8.1 The identification markings on the drawings shall be the same as that indicated in the manufacturer's literature and shall be shown in a table on the setting schedule together with the length, type, size of the unit and the sizes and arrangement of all reinforcement.

10.9 Transport

Transport of precast elements inside the factory and to the site of erection is of considerable importance not only from the point of view of economy but also from the point of view of design and efficient management. Transport of precast elements must be carried out with extreme care to avoid any jerk and distress in elements and handled as far as possible in the same orientation as it is to be placed in final position. *See* **10.11** for additional design considerations.

10.9.1 *Transport Inside the Factory*

Transport of precast elements moulded inside the factory depends on the method of production, selected for the manufacture as given in Table 3.

10.9.2 *Transport from Stacking Yard Inside the Factory to the Site of Erection*

Transport of precast concrete elements from the factory to the site of erection should be planned in such a way so as to be in conformity with the traffic rules and regulations as stipulated by the Authorities. The size of the elements is often restricted by the availability of suitable transport equipment, such as tractor-cum-trailers, to suit the load and dimensions of the member in addition to the opening dimensions under the bridge and load carrying capacity while transporting the elements over the bridge.

10.9.2.1 While transporting elements in various systems, that is, wagons, trucks, bullock carts, etc, care should be taken to avoid excessive cantilever actions and desired supports are maintained. Transportation of prefabricated element should be done with safety ties and vibrations to the elements in transit should be minimum. Special care should be taken at location of sharp bends and on uneven or slushy roads to avoid undesirable stresses in elements.

10.9.2.2 Before loading the elements in the transporting media, care should be taken to ensure that the base packing for supporting the elements are located at specified positions only. Subsequent packings shall be kept strictly one over the other.

10.10 Erection

In the erection of precast elements, all the following items of work are meant to be included:

a) Slinging of the precast element;
b) Tying up of erection ropes connecting to the erection hooks;
c) Cleaning of the elements and the site of erection;
d) Cleaning of the steel inserts before incorporation in the joints, lifting up of the elements, setting them down into the correct envisaged position;
e) Adjustment to get the stipulated level, line and plumb;
f) Welding of cleats;
g) Changing of the erection tackles;
h) Putting up and removing of the necessary scaffolding or supports;
j) Welding of the inserts, laying of reinforcements in joints and grouting the joints; and
k) Finishing the joints to bring the whole work to a workmanlike finished product.

See **10.11** for additional design considerations.

10.10.1 In view of the fact that the erection work in various construction jobs using prefabricated concrete elements differs from place to place depending on the site conditions, safety precautions in the work are of utmost importance. Hence only those skilled foremen, trained workers and fitters who have been properly instructed about the safety precautions to be taken should be employed on the job. For additional information, *see* Part 7 'Construction Management, Practices and Safety' of the Code.

10.10.2 Transport of people, workers or visitors, by using cranes and hoists should be strictly prohibited on an erection site.

10.10.3 In the case of tower rail mounted cranes running on rails, the track shall not have a slope more than 0.2 percent in the longitudinal direction. In the transverse direction the rails shall lie in a horizontal plane.

10.10.4 The track of the crane should be checked daily to see that all fish plates and bolts connecting them to the sleepers are in place and in good condition.

10.10.5 The operation of all equipment used for handling and erection shall follow the operations manual provided by the manufacturer. All safety precautions shall be taken in the operations of handling and erection.

10.10.6 *Erection Tolerances*

For the erection tolerances, reference shall be made to good practice [6-7A(3)] for large panel prefabricates .

10.11 Design Considerations

Based on the design intent, production environment and aesthetic requirements of the prefabricated panels, the resultant stresses should be controlled to minimize cracking in precast and/or prestressed panels. Precast (non-prestressed) components are generally designed as 'cracked' unless cracking is an aesthetic concern. Where the panels are to be designed 'without cracking' the extreme fibre tensile stresses during various stages of handling, storage and erection should be kept under the tensile strength of the concrete (modulus of rupture) at that stage with a factor of safety of 1.5 or more. Structural design requirements of minimum spacing, skin reinforcement and crack width criteria as specified in Part 6 'Structural Design, Section 5 Concrete, Subsection 5A Plain and Reinforced Concrete' of the Code are applicable.

Resultant extreme fibre tensile stresses $\leq 0.7\sqrt{f_{ck}}/1.5$

In addition, extra static load multipliers should be used to account for impact, and demoulding forces as per the following:

Sl No.	*Prefabricated Panel Type*	*Static Load Multiplier*
i)	Demoulding:	
	a) Structural components	1.3
	b) Architectural components	1.4
ii)	Yard handling and erection:	
	All components	1.2
iii)	Transportation:	
	All components	1.2

The static load multipliers are to be used in addition to the factor of safety of 1.5 used in the tensile stress limit. Also, the load multipliers are only needed for the flexural design and are not applicable for the lifting devices.

11 EQUIPMENT

11.1 General

The equipment used in the precast concrete industry/ construction may be classified into the following categories:

a) Machinery required for quarrying of coarse and fine aggregates;

b) Conveying equipment, such as belt conveyors, chain conveyors, screw conveyors, bucket elevators, hoists, etc;

c) Concrete mixing machines;

d) Concrete vibrating machines;

e) Erection equipment, such as cranes, derricks, hoists, chain pulley blocks, etc;

f) Transport machinery, such as tractor-cum-trailers, dumpers, lorries, locomotives, motor boats and rarely even helicopters;

g) Workshop machinery for making and repairing steel and timber moulds;

h) Bar straightening, bending and welding machines to make reinforcement cages;

j) Minor tools and tackles, such as wheel barrows, concrete buckets, etc; and

k) Steam generation plant for accelerated curing.

In addition to the above, pumps and soil compacting machinery are required at the building site for the execution of civil engineering projects involving prefabricated components.

Each of the above groups may further be classified into various categories of machines and further to various other types depending on the source of power and capacity.

11.2 Mechanization of the Construction and Erection Processes

The various processes can be mechanized as in any other industry for attaining the advantages of mass production of identical elements which in turn will increase productivity and reduce the cost of production in the long run, at the same time guaranteeing quality for the end-product. On the basis of the degree of mechanization used, the various precasting factories can be divided into three categories:

a) With simple mechanization;

b) With partial mechanization; and

c) With complex mechanization leading to automation.

11.2.1 In simple mechanization, simple mechanically operated implements are used to reduce the manual labour and increase the speed.

11.2.2 In partial mechanization, the manual work is more or less eliminated in the part of a process. For example, the batching plant for mixing concrete, hoists to lift materials to a great height and bagger and bulldozer to do earthwork come under this category.

11.2.3 In the case of complex mechanization leading to automation, a number of processes leading to the end-product are all mechanized to a large extent (without or with a little manual or human element involved). This type of mechanization reduces manual work to the absolute minimum and guarantee the mass production at a very fast rate and minimum cost.

11.2.4 The equipment shall conform to accepted standards as listed in Part 7 'Construction Management, Practices and Safety' of the Code.

12 PREFABRICATED STRUCTURAL UNITS

For the design and construction of composite structures made up of prefabricated structural units and cast *in-situ* concrete, reference may be made to the good practice [6-7A(4)].

For design and construction of precast reinforced and prestressed concrete triangulated trusses reference may be made to the good practice [6-7A(5)].

For design and construction of floors and roofs using various precast units, reference may be made to the good practice [6-7A(6)].

For construction with large panel prefabricates, reference may be made to good practice [6-7A(3)].

For construction of floors and roofs with joists and filler blocks, reference may be made to good practice [6-7A(7)].

ANNEX A

(*Foreword*)

COMMON DEFECTS AND REMEDIES

A-1 As defects in precast concrete elements result in direct and indirect cost in terms of rectification and construction time, it is worthwhile to ensure that they are produced and handled in a way to avoid/reduce such incidences. Table 4 illustrates some of these common defects, their causes and preventive measures.

Table 4 List of Common Defects and Recommended Measures
(*Clause* A-1)

Sl No.	Common Defects	Possible Causes	Recommendations	Remedial Measures
(1)	(2)	(3)	(4)	(5)
i)	Dimensional deviation: a) Variation in the dimension of precast elements would affect the joint alignment between these elements when erected b) Precast slab element may warp due to insufficient concrete strength at lifting or improper storage condition	a) Mould forms may not be sufficiently rigid to maintain specified tolerances during concrete placement b) Precast elements may not have gained sufficient concrete strength when demoulded c) Top surface finish of precast elements may not be properly levelled and troweled during production which result in differential thickness d) Precast elements (especially slender wall or slab panels) may be subjected to undue stress and deformation when they are not properly	a) Regular check on the dimensions and rigidity of mould forms before casting operations. As a general guide the recommended thickness for steel mould are: 1) 4.5 mm – up to 50 castings 2) 6 mm – up to 100 castings 3) 9 mm – up to 200 castings Mould forms conditions will deteriorate with time and usage. They should be repaired, stiffened or replaced when needed b) Cube tests should be conducted to ascertain the concrete strength of	a) For minor deviation, corrective measures such as surface grinding, trimming/hacking and skim coat application can be appropriately used to remedy the situation b) Precast elements that are not within acceptable tolerance limits and have significant effects on the structural integrity or architectural performance should not be used

Table 4 — (*Continued*)

(1)	(2)	(3)	(4)	(5)
		supported during storage	elements before demoulding. c) Spreading and levelling of concrete placement using appropriate tools such as screeder d) Precast elements should be properly stored and stacked at designated points using suitable support spacers and frame rack system	
ii)	Cracks	a) Precast elements may not have gained sufficient concrete strength before demoulding b) Cracks may have occurred during initial lifting due to friction between the elements and the casting mould forms c) Thickness of the precast elements may be too thin (70 mm or less) and flimsy for safe demoulding and handling d) Cracks may have occurred during erection due to lack of planning and provisions given to the precast panel geometry, crane rigging configuration and location of openings	a) Proper curing method, curing time and temperature should be maintained b) Cube tests should be conducted to ascertain the concrete strength of elements before demoulding c) Appropriate form release agents should be used and uniformly applied onto the mould surface to minimize friction d) Sectional thickness of precast elements should be increased to accommodate demoulding and handling stresses e) Proper handling techniques should be adopted f) Sufficient lifting points should be used to minimize over-stressing on certain areas g) Additional reinforcing bars should be placed around the opening and odd corners h) Temporary stiffeners for openings should be provided during erection	a) All cracks should be examined by a qualified engineer to determine if they present a structural problem b) Depending on the locations and seriousness of the cracks, different repair methods can be used to make good the affected precast elements c) Hairline cracks (not more than 0.3 mm) can be repaired by cutting V-groove of specified minimum depth along the crack-lines, followed by patching d) For surface cracks (more than 0.3 mm) or through cracks, epoxy injection method should be used to ensure that the cracks are completely bound and filled with epoxy
iii)	Chip-off and damages	a) Chip-off at panel edges are usually caused by the hard bearing at supports or excessive force exerted on the elements when handling b) Improper storage method	a) Precautions should be taken to avoid damaging the elements in the course of placement on vehicle, travel to site and during the unloading operation. Bearing pads should be used to cushion the contact areas from damage b) The storage area should be relatively flat and dry c) Precast elements should be properly stored and stacked at designated points using suitable support spacers and frame rack system d) The casting slab or mould form should be thoroughly cleansed, levelled to achieve a smooth surface e) The coverage of form release agents should be	a) Remove all loose concrete and wash off any dust or dirt in the affected area b) Apply bonding agent to affected concrete surface c) Welded wire mesh can be included to provide support for the patch mix concrete or grout d) Patch mix composition or grout should be consistent with the strength requirements of the adjacent concrete e) Formwork is to be put up where necessary to contain the patch mix or grout f) Protect the affected

Table 4 — (*Continued*)

(1)	(2)	(3)	(4)	(5)
			adequate and uniformly applied onto the mould surface f) Spacers of the correct sizes should be used and well secured to maintain the concrete cover required during casting g) Lifting inserts and concrete strength of elements should be of adequate capacity for the intended lift. Use lifting proprietary products for safe and efficient handling h) Lifting inserts or hooks should be inspected for proper location. They should be fastened to specified depth prior to concrete placement	area from any disturbance during curing period
iv)	Honeycomb and excessive pinholes	a) Poor concrete compaction due to ineffective vibration or rebars congestion b) Grout leakage along the perimeter side forms due to, 1) loose or missing bolts, fixing pins 2) damaged rubber gasket seal 3) mould part, if defective	a) Proper compaction method should be adopted and carried out b) Concrete mix design and workability should be reviewed and adjusted when needed c) Appropriate concrete vibrator such as clamp-on form vibrator can be used to attain better compaction d) Rebar congestion can be alleviated by having larger (that is, lesser) rebars or by increasing the sectional dimensions of the elements, where possible e) Mechanical couplers or sleeves can be used to simplify the reinforcement layout and to minimize rebar congestion f) Defective mould forms and accessories should be repaired or replaced to prevent grout leakage during concreting	a) Remove all loose concrete and wash off any dust or dirt in the affected area b) Apply bonding agent to affected concrete surface c) Welded wire mesh can be included to provide support for the patch mix concrete or grout d) Patch mix composition or grout should be consistent with the strength requirements of the adjacent concrete e) Formwork is to be put up where necessary to contain the patch mix or grout f) Protect the affected area from any disturbance during curing period
v)	Missing or wrong details such as cast-in items, architectural nib and groove details, lifting hooks, reinforcement/starter bars/blockout/corrugated pipes	a) Items may not have been included in the shop drawing b) Quality checks may not be properly in place	a) All items should be reflected in the shop drawings for production. Any changes should be made known to the production team b) The use of checklists during inspection can help to ensure that all items specified in the drawing are included before casting	a) Certain details such as missing starter bars/ reinforcement and lifting hooks can be replaced by welding additional reinforcement bars after hacking off the concrete at the affected area b) Other items such as cast-in items, groove and blockout can be provided by chasing or chiseling out the face of the precast panels
vi)	Strand slippage which exceed allowable design values (item	a) Insufficient bond strength between concrete and the	a) Required concrete strength of the precast elements	a) It is not possible to rectify the elements

Table 4 — (*Concluded*)

(1)	(2)	(3)	(4)	(5)
	applicable to pre-stressed elements only) Slippages of pre-stressing strands can be detected by visual inspection	pre-stressing strands b) Poor compaction of concrete around pre-stressed strands	should be attained and verified by cube test results before de-tensioning of strands b) Proper compaction method should be adopted and carried out during casting c) Concrete mix design and workability should be reviewed and adjusted when needed d) Provision of appropriate concrete vibrator to attain better compaction	from strand slippage b) Design verification should be carried out to ascertain the reduced capacity of the elements due to slippage, if adopted
vii)	Alignment	a) Inaccurate setting out and positioning of precast elements during erection b) Deviation in the dimensions of the precast element	a) Appropriate surveying and leveling equipment should be used to achieve better alignment b) Required alignment and level should be confirmed before permanent jointing c) Critical dimensions of precast concrete elements should be verified before installation	a) Minor adjustments of the element/panel alignment can be done during installation However the effects on the final alignment and deviation of the building should be evaluated b) For minor deviations, corrective measures such as surface grinding, trimming/hacking and skim coat application can be appropriately used to rectify the precast elements before installation c) Precast elements that are not within acceptable tolerance limits and have significant effects on the structural integrity or architectural performance should not be used

LIST OF STANDARDS

The following list records those standards which are acceptable as 'good practice' and 'accepted standards' in the fulfilment of the requirements of the Code. The latest version of a standard shall be adopted at the time of enforcement of the Code. The standards listed may be used by the Authority for conformance with the requirements of the referred clauses in the Code.

In the following list, the number appearing in the first column within parantheses indicates the number of reference in this Subsection.

	IS No.	*Title*
(1)	2185	Specification for concrete masonry units
	(Part 1) : 2005	Hollow and solid concrete blocks (*third revision*)
	(Part 2) : 1983	Hollow and solid lightweight concrete blocks (*first revision*)
	(Part 3) : 1984	Autoclaved cellular (aerated) concrete blocks (*first revision*)
	(Part 4) : 2008	Cellular concrete blocks using preformed foam
	3201 : 1988	Criteria for design and construction of precast trusses and purlins (*first revision*)
	6072 : 1971	Specification for autoclaved reinforced cellular concrete wall slabs
	6073 : 2006	Specification for autoclaved reinforced cellular concrete floor and roof slabs (*first revision*)
	9893 : 1981	Specification for precast concrete blocks for lintels and sills
	10297 : 1982	Code of practice for design and construction of floors and roofs using precast reinforced/ prestressed concrete ribbed or cored slab unit
	10505 : 1983	Code of practice for construction of floors and roofs using precast concrete waffle units
	11447 : 1985	Code of practice for construction with large panel prefabricates
	12440 : 1988	Specification for precast concrete stone masonry blocks
	13990 : 1994	Specification for precast reinforced concrete planks and joists for flooring and roofing
	14143 : 1994	Specification for prefabricated brick panel and partially precast concrete joist for flooring and roofing
	14201 : 1994	Specification for precast reinforced concrete channel unit for construction of floors and roofs
	14241 : 1995	Specification for precast L-Panel units for roofing
(2)	4905 : 1968	Methods for random sampling
(3)	11447 : 1985	Code of practice for construction with large panel prefabricates
(4)	3935 : 1966	Code of practice for composite construction
(5)	3201 : 1988	Criteria for design and construction of precast trusses and purlins (*first revision*)
(6)	6332 : 1984	Code of practice for construction of floor and roofs using precast doubly-curved shell units (*first revision*)
	10297 : 1982	Code of practice for design and construction of floors and roofs using precast reinforced/ prestressed concrete ribbed or cored slab units
	10505 : 1983	Code of practice for construction of floors and roofs using precast reinforced concrete waffle units
	13994 : 1994	Code of practice for design and construction of floor and roof with precast reinforced concrete planks and RC joists
	14142 : 1994	Code of practice for design and construction of floors and roofs with prefabricated brick panel
	14215 : 1994	Code of practice for construction of floor and roof with RC channel units
	14242 : 1995	Code of practice for design and construction of roof with L-Panel units
(7)	6061	Code of practice for construction of floor and roof with joists and filler blocks
	(Part 1) : 1971	With hollow concrete filler blocks
	(Part 2) : 1981	With hollow clay filler blocks (*first revision*)
	(Part 3) : 1981	With precast hollow clay block joists and hollow clay filler blocks
	(Part 4) : 1981	With precast hollow clay block slab panels

NATIONAL BUILDING CODE OF INDIA

PART 6 STRUCTURAL DESIGN

Section 7 Prefabrication, Systems Building and Mixed/Composite Construction:
7B Systems Building and Mixed/Composite Construction

BUREAU OF INDIAN STANDARDS

CONTENTS

FOREWORD ... 3

1 SCOPE ... 5
2 TERMINOLOGY ... 5
3 MATERIALS, PLANS AND SPECIFICATIONS ... 6
4 MODULAR COORDINATION, ARCHITECTURAL TREATMENT AND FINISHES ...6
5 COMPONENTS ... 6
6 FORMWORK SYSTEMS ... 6
7 SYSTEM AND STRUCTURAL SCHEMES ... 7
8 DESIGN CONSIDERATIONS ... 7
9 JOINTS ... 8
10 TESTS FOR COMPONENTS/ STRUCTURES ... 8
11 ERECTION ... 8
12 EQUIPMENT ... 8
13 PREFABRICATED STRUCTURAL UNITS ... 8
ANNEX A CONSTRUCTION PRACTICE FOR DECKING ... 9
ANNEX B CONSTRUCTION PRACTICE FOR CONCRETING ON DECKING ... 10
LIST OF STANDARDS ... 12

FOREWORD

This Code (Part 6/Subsection 7B) covers recommendations regarding modular planning, component sizes, joints, manufacture, storage, transport and erection of prefabricated elements for use in buildings and such related requirements for systems building and mixed/composite construction.

Systems building and mixed/composite building construction, popularly referred to as pre-engineered building (PEB) construction, is an upcoming field as far as its development and use in the country is concerned. Two aspects specifically to be borne in mind are the system to be adopted for the different categories of buildings and the sizes of their components. Here the principle of modular coordination is of value and its use is recommended.

This Section was first published in 1970 and was subsequently revised in 1983 and 2005.

In the second revision in 2005, this Section, earlier named as prefabrication and systems building was renamed and restructured as follows:

Section 7 Prefabrication, Systems Buildings and Mixed/Composite Construction
- 7A Prefabricated Concrete
- 7B Systems Buildings and Mixed/Composite Construction

This Subsection 7B covering systems building and mixed/composite construction, introduced in 2005, prescribed general requirements applicable to all valid existing systems and mixed/composite constructions as also to accommodate any new system introduced in the country. The Subsection 7A covered those systems approach which predominantly uses concrete as the material for components.

In this revision of this Subsection, following modifications have been incorporated:

a) Definitions of some existing terminologies have been modified, wherever required.
b) Aspects enlisted relevant to devising systems and structural schemes, have been updated.
c) Design considerations have been reviewed and modified based on latest thinking and practices.

The information contained in this Subsection is largely based on IS 15917 : 2010 'Building design and erection using mixed/composite construction — Code of practice'.

All standards, whether given herein above or cross-referred to in the main text of this Subsection, are subject to revision. The parties to agreement based on this Subsection are encouraged to investigate the possibility of applying the most recent editions of the standards.

For the purpose of deciding whether a particular requirement of this Subsection is complied with, the final value, observed or calculated, expressing the result of a test or analysis, shall be rounded off in accordance with IS 2 : 1960 'Rules for rounding off numerical values (*revised*)'. The number of significant places retained in the rounded off value should be the same as that of the specified value in this Subsection.

NATIONAL BUILDING CODE OF INDIA

PART 6 STRUCTURAL DESIGN

Section 7 Prefabrication, Systems Building and Mixed/Composite Construction: 7B Systems Building and Mixed/Composite Construction

1 SCOPE

This Code (Part 6/Subsection 7B) covers recommendations regarding modular planning, component sizes, joints, manufacture, storage, transport and erection of prefabricated elements for use in buildings and such related requirements for systems building and mixed/composite construction.

2 TERMINOLOGY

For the purpose of this Subsection, the following definitions shall apply.

2.1 Authority Having Jurisdiction — The authority which has been created by a statute and which, for the purpose of administering the Code/Part, may authorize a committee or an official or an agency to act on its behalf; hereinafter called the 'Authority'.

2.2 Basic Module — The fundamental module used in modular coordination, the size of which is selected for general application to building and its components.

NOTE — The value of the basic module has been chosen as 100 mm for the maximum flexibility and convenience. The symbol for the basic module is *M*.

2.3 Cellular Concrete — The material consisting of an inorganic binder (such as lime or cement or both) in combination with a finely ground material containing siliceous acid (such as sand), gas generating material (for example, aluminium powder), water and harmless additives (optional); and steam cured under pressure in autoclaves.

2.4 Component — A building product formed as a distinct unit having specified sizes in three dimensions.

2.5 Composite/Mixed Construction — Construction involving two or more different kinds of components such as prefabricated structural units of steel, prestressed concrete or reinforced concrete and cast *in-situ* concrete, ferrocement, timber, masonry in brickwork and blockwork, glass and glazing connected together in such a manner that they act integrally.

2.6 Increments — Difference between two homologous dimensions of components of successive sizes.

2.7 Module — A unit of size used in dimensional coordination.

2.8 Modular Coordination — Dimensional coordination employing the basic module or a multimodule.

NOTE — The purposes of modular coordination are:

a) To reduce the variety of component sizes produced, and

b) To allow the building designer greater flexibility in the arrangement of components.

2.9 Modular Grid — A rectangular coordinate reference system in which the distance between consecutive lines is the basic module or a multimodule. This multimodule may differ for each of the three orthogonal dimensions of the grid, two in plan and one in vertical direction.

2.10 Multimodule — A module whose size is a selected multiple of the basic module.

2.11 Prefabricate — Fabrication of components or assembled units prior to erection or installation in a building.

2.12 Prefabricated Building — The partly/fully assembled and erected building, of which the structural parts consist of prefabricated individual units or assemblies using ordinary or controlled materials, including service facilities; and in which the service equipment may be either prefabricated or constructed *in-situ*.

2.13 Sandwich Panels — Panels made by sandwiching a layer of insulation material between two outer layers of hard durable materials like steel, dense concrete, plastic, cement based sheet, ceramic, etc. The hard coverings on two outer faces may be of same or different materials; the three layers may or may not be bonded with each other to behave as a composite panel.

2.14 Self-Compacting Concrete — Concrete that is able to flow under its own weight and completely fill the voids with in the formwork, even in the presence of dense reinforcement without any vibration, whilst maintaining homogeneity without segregation.

2.15 Shear Connectors — Structural elements, such as anchors, studs, channels, loops and spirals, intended to transmit the shear between the prefabricated member

and the cast *in-situ* concrete and also to prevent separation at the interface.

2.16 System — The method of construction of buildings with certain order and discipline and repetitive operations using the prefabricated components, tunnel form or engineered shuttering, where the work is organized and follows a defined procedure.

2.17 Unit — Building material formed as a simple article with all three dimensions specified, complete in itself but intended to be part of a compound unit or complete building. Examples are brick, block, tile, etc.

3 MATERIALS, PLANS AND SPECIFICATIONS

3.1 Materials

3.1.1 Part 6 'Structural Design, Section 7 Prefabrication, Systems Building and Mixed/ Composite Construction, Subsection 7A Prefabricated Concrete' of the Code shall be referred for requirements of materials and also for the characteristics to be considered in their selection.

3.1.2 The materials used in prefabricated components may be many and the modern trend is to use concrete, ferrocement, steel, treated timber, aluminium, cellular concrete, light weight concrete, ceramic products, etc. However, this Subsection pertains to mixed/composite construction.

3.2 Plans and Specifications

This shall be in accordance with Part 6 'Structural Design, Section 7 Prefabrication, Systems Building and Mixed/Composite Construction, Subsection 7A Prefabricated Concrete' of the Code.

4 MODULAR COORDINATION, ARCHITECTURAL TREATMENT AND FINISHES

4.1 Modular Coordination

This shall be in accordance with Part 6 'Structural Design, Section 7 Prefabrication, Systems Building and Mixed/Composite Construction, Subsection 7A Prefabricated Concrete' of the Code.

4.2 Architectural Treatment and Finishes

This shall be in accordance with Part 6 'Structural Design, Section 7 Prefabrication, Systems Building and Mixed/Composite Construction, Subsection 7A Prefabricated Concrete' of the Code.

5 COMPONENTS

5.1 The preferred dimensions of precast elements used and their casting tolerances shall be in accordance with Part 6 'Structural Design, Section 7 Prefabrication, Systems Building and Mixed/Composite Construction, Subsection 7A Prefabricated Concrete' of the Code.

5.2 The permissible tolerances of timber used shall be in accordance Part 6 'Structural Design, Section 3 Timber and Bamboo, Subsection 3A Timber' of the Code.

5.3 For permissible tolerances of steel and masonry, reference may be made to relevant Indian Standards.

6 FORMWORK SYSTEMS

The formwork systems which are utilized in buildings shall be as given in **6.1** to **6.5**.

6.1 Tunnel Form

This is a system which casts walls and slab monolithically in a single pour of concrete. Façade walls are precast or of block masonry to enable removal of tunnel form. All components of the formwork are made up of steel. This produces very rapid construction in a building where the plans are of modular nature suitable for this technology. Accelerated curing, if required, is possible enabling early stripping of formwork.

6.2 Slipform

Slipform is a continuously moving form at such a speed that the concrete when exposed has already achieved enough strength to support the vertical pressure from concrete still in the form as well as to withstand nominal lateral forces. Slipform may be classified as straight slipform, tapering slipform and slipform for special applications. Construction of lift cores and stairwell using slipform technique comes under special applications because of their complex sizes, shapes and loads to be lifted along with the slipform like walkway truss, etc, which is essential for construction. This system uses hydraulic jacks avoiding crane for lifting of assembly during construction operation. This system facilitates rapid construction and continual casting, creating a monolithic structure thereby avoiding construction joints.

6.3 Aluminium Formwork

This system of formwork uses modular aluminium panels, which are light and rust free, in both sheathing and framework. It may be used for a broad range of applications from wall to slab construction panels to more complicated structures involving bay windows, stairs and hoods. Every component is light enough to be handled easily thereby minimizing the need for heavy lifting equipment.

6.4 Large Panel Shuttering System

This is a system, which gives an advantage of combining speed and quality of construction. The vertical load

carrying members are made of steel whereas the horizontal members are of plywood inserted into two wooden beams thereby forming a web flange. All the formwork and support systems shall be designed for the loads coming during the actual execution stage.

6.5 Other/New Systems

Any other/new system may be used for systems building after due examination and approval by the Authority.

7 SYSTEM AND STRUCTURAL SCHEMES

7.1 Several schemes are possible, with certain constraints, using the same set of components. The degree of flexibility varies from system to system. However, in all the systems there is a certain order and discipline.

7.2 The following aspects, among others, are to be considered in devising a system:

a) Effective utilization of spaces;
b) Straight and simple walling scheme;
c) Limited sizes and numbers of components;
d) Limited opening in bearing walls;
e) Regulated locations of partitions;
f) Standardized service and stair units;
g) Limited sizes of doors and windows with regulated positions;
h) Structural clarity and efficiency;
j) Suitability for adoption in low and high rise building;
k) Ease of manufacturing, storing and transporting;
m) Speed and ease of erection;
n) Optimization of available handling equipment; and
p) Simple jointing system.

7.3 Systems for Mixed/Composite Construction

The system of mixed/composite construction depends on the extent of the use of prefabricated components, their materials, sizes and the technique adopted for their manufacture and use in building.

7.3.1 *Combinations of System Components for Mixed/ Composite Construction*

The following combinations may be used in mixed/ composite construction:

a) Structural steel work and timber roofs on precast frames.
b) Precast floors onto steel and concrete beams, and masonry walls.
c) Profiled metal decking on precast beams.
d) Precast frames onto cast *in-situ* foundations, retaining walls, etc.
e) Precast frames stabilized by masonry walls, steel bracing, etc.
f) Precast cladding in steel or cast *in-situ* frames and *vice-versa*.
g) Glass curtain walling (*see* Part 6 'Structural Design, Section 8 Glass and Glazing' of the Code), stone cladding or metal sheeting onto precast concrete frames, etc.
h) Reinforced concrete and structural steel as composite columns and beams.

7.3.1.1 Precast concrete may be combined with cast *in-situ* concrete, often termed hybrid construction. Cast *in-situ* is mostly used to form homogenous connections between precast elements and provide a structural topping for horizontal diaphragm action. In other cases it is used to form the foundations and sub-structure to the building.

7.3.1.2 Structural steel work is largely used in long span prestressed concrete floors supported on rolled and prefabricated steel beams and also as steel roof trusses supported on concrete columns.

7.3.1.3 Timber may be used as long span glue-laminated beams and rafters, with precast concrete. Precast floors may be used in timber frame construction. Similarly, timber frames with precast elements shall be used as a building system.

7.3.1.4 Brick and block masonry may be combined with precast concrete structures and floors. The most common combinations is to use prestressed floors on load bearing walls.

8 DESIGN CONSIDERATIONS

8.1 The mixed/composite structures shall be analyzed appropriately and the joints in them designed to take the forces of an equivalent discrete system. Resistance to horizontal loading shall be provided by placing beams, walls and/or bracings in two directions at right angles or otherwise. The individual components shall be designed, taking into consideration appropriate end conditions and loads at various stages of construction. The components of the structure shall be designed for loads in accordance with Part 6 'Structural Design, Section 1 Loads, Forces and Effects' of the Code. In addition, members shall be designed for handling, erection and impact loads that may be expected during handling and erection.

8.2 For mixed and composite construction the following shall be considered:

a) *Positions of stability cores, walls, bracing, etc* — In high rise buildings, the most

popular method is a central core constructed several storeys ahead of the framework. The core could be built using precast concrete panels, CIP walls, steel cross bracing or precast concrete diagonal bracing.

b) *Maturity of connections* — Cast *in-situ* grouted joints need temporary propping until desired design strength is achieved unless combined mechanical connections are also used. The overall construction sequence should be planned ahead of time carefully as per the design requirements. The design of temporary bracing system using key components should be looked at critically.

c) *The availability and/or positioning of equipments to transport and erect components* — The size and weight of the various components shall be organized to make optimum use of crane capacity, for example, the lightest units farthest from the operating zone.

d) *Erection safety and speed of construction, with attention to cast in-situ concreting sequences* — This is particularly important where fixing gangs are unaccustomed to working with different materials.

e) *Tolerances for economical construction* — This is particularly important where different manufacturers are producing components in different materials.

8.3 Other design considerations and safety requirements against progressive collapse shall be in accordance with Part 6 'Structural Design, Section 7 Prefabrication, Systems Building and Mixed/Composite Construction, Subsection 7A Prefabricated Concrete' of the Code.

9 JOINTS

Design of joints shall be in accordance with Part 6 'Structural Design, Section 7 Prefabrication, Systems Building and Mixed/Composite Construction, Subsection 7A Prefabricated Concrete' of the Code.

10 TESTS FOR COMPONENTS/ STRUCTURES

Sampling procedure, testing on individual components and load testing of structure shall be in accordance with Part 6 'Structural Design, Section 7 Prefabrication, Systems Building and Mixed/Composite Construction, Subsection 7A Prefabricated Concrete' of the Code.

11 ERECTION

11.1 Manufacture, Storage, Transport and Erection

The requirements relating to manufacture, storage, transport and erection of precast concrete elements shall be in accordance with Part 6 'Structural Design, Section 7 Prefabrication, Systems Building and Mixed/ Composite Construction, Subsection 7A Prefabricated Concrete' of the Code, including the requirements applicable to mixed/composite constructions given therein.

11.2 Decking

Constructional practices relating to decking shall be as given in Annex A.

11.3 Concreting on Decking

Concreting on decking shall be carried out in accordance with Annex B.

12 EQUIPMENT

The requirements relating to equipment used in the precast concrete construction shall be in accordance with Part 6 'Structural Design, Section 7 Prefabrication, Systems Building and Mixed/ Composite Construction, Subsection 7A Prefabricated Concrete' of the Code.

13 PREFABRICATED STRUCTURAL UNITS

For the design and construction of composite structures made up of prefabricated structural units and cast *in-situ* concrete, reference may be made to good practice [6-7B(1)].

For design and construction of precast reinforced and prestressed concrete triangulated trusses reference may be made to the good practice [6-7B(2)].

For design and construction of floors and roofs using various precast units, reference may be made to the good practice [6-7B(3)].

For construction with large panel prefabricates, reference may be made to good practice [6-7B(4)].

For construction of floors and roofs with joists and filler blocks, reference may be made to good practice [6-7B(5)].

ANNEX A

(*Clause* 11.2)

CONSTRUCTION PRACTICE FOR DECKING

A-1 RECEIVING, STORING AND LIFTING THE DECKING

A-1.1 Receiving Decking

Decking is packed by the manufacturer into bundles of up to 24 sheets, and the sheets are normally secured with metal banding. Each bundle may be up to 1 m wide (the width of a single sheet) by 750 mm deep, and may weigh up to 2.5 t, depending on sheet length. Loads are normally delivered by articulated vehicles approximately 16 m long with a maximum gross mass of up to 40 t, and a turning circle of approximately 19 m. It shall be ensured that there is suitable access and appropriate standing and off-loading areas.

Each bundle will be given an identification tag by the manufacturer. The information on each tag shall be checked immediately upon arrival, to prevent incorrect sheets being used, or unnecessary delays if changes are necessary. In particular, the stated sheet thickness shall be checked against the requirement specified on the drawings, and a visual inspection shall be made to ensure that there is no damage.

The bundles shall be lifted from the vehicle. Bundles shall never be off-loaded by tipping, dragging, dropping or other improvised means.

A-1.2 Storing of Decking

The decking shall not be delivered more than one month before its anticipated use, as it may be vulnerable to abuse and damage if stored for longer periods on site. If it is not for immediate use, the decking shall be stored on the steel frame. If this is not possible, it shall be located in an area where it will not be contaminated by site traffic, and placed on bearers, which provide a gentle slope to the bundle. This will allow any condensation or rain to drain and a free flow of air around the bundle. Bundles shall not be stacked more than 4 m high, and no other materials shall be stored on top of them. Bearers shall be placed between bundles, and positioned to prevent bending of the sheets.

A-1.3 Lifting and Positioning the Decking

The support steelwork shall be prepared to receive the decking before lifting the bundles onto it. The top surface of the underlying beams shall be reasonably clean. When through-deck welding of shear studs is specified, the tops of the flanges shall be free of primer, paint and galvanizing.

The identification tags shall be used to ensure that bundles are positioned on the frame at the correct floor level, and in the nominated bay shown on the deck layout drawing. The bundles shall be positioned such that the interlocking side laps are on the same side. This will enable the decking to be laid progressively without the need to turn the sheets. The bundles shall also be positioned in the correct span orientation, and not at 90° to it. Care shall be taken to ensure that the bundles are not upside down, particularly with trapezoidal profiles. For most trapezoidal decking profiles, the embossments shall be oriented so that they project upwards.

Care is needed when lifting the decking bundles; protected chain slings are recommended for the same. Unprotected chain slings can damage the bundle during lifting. When synthetic slings are used there is a risk of the severing them on the edges of the decking sheets.

If timber packers are used, they shall be secured to the bundle before lifting so that when the slings are released they do not fall to the ground (with potentially disastrous results). Bundles shall never be lifted using metal banding.

A-2 DECK INSTALLATION

A-2.1 Placement of Decking

Breaking open the bundles and installing the decking shall be done only when all the sheets can be positioned and secured. The decking layout drawing shall also be checked to ensure that any temporary support that need to be in position prior to deck laying, is in place.

Access for installation may normally be achieved using ladders connected to the steel frame. Once the laying out the sheets is started by erectors, they shall create working platform by securely fixing the decking as they progress.

The laying of sheets shall begin at the locations indicated on the decking layout drawings. These would normally be at the corner of the building at each level, to reduce the number of 'leading edges', that is unprotected edges where the decking is being laid. When the bundles have been properly positioned, as provided above, there shall be no need to turn the sheets manually, and there shall be no doubt which way up the sheet shall be fixed.

Individual sheets shall be slid into place and, where possible, fixed to the steelwork before moving onto the next sheet. This will minimize the risk of an accident

occurring as a result of movement of a sheet when it is being used as a platform. However, for setting-out purposes, it may be necessary to lay out an entire bay using a minimum number of temporary fixings before fully securing the sheets later.

Sheets shall be positioned to provide a minimum bearing of 50 mm on the steel support beams. The ends of adjacent sheets shall be butted together. A gap of up to 5 mm is generally considered not to allow excessive seepage, but, if necessary, the ends of the sheets may be taped together. When end gaps are greater than 5 mm, it is normally sufficient to seal them with an expanding foam filler. The longitudinal edges shall be overlapped, to minimize concrete seepage along the seams. Although not normally required, seam fixings may be necessary in some circumstances. Sheets projecting freely more than 600 mm shall be avoided.

If necessary, sheets shall be cut using a grinder or a nibbler. However, field cutting shall be kept to a minimum and shall only be necessary where a column or other obstruction interrupts the decking. Gaps adjacent to the webs of columns shall be filled in with off-cuts or thin strips of steel. Decking sheets shown as continuous on the decking layout drawing shall never be cut into more than one length. Also, sheets shall never be severed at the location of a temporary support, and the decking shall never be fastened to a temporary support.

As the work progresses, scraps and off-cuts shall be disposed of in a skip placed alongside the appropriate level of working. The skip shall be positioned carefully over a support beam to avoid overloading the decking. If a skip is not available, scraps shall be gathered for collection as soon as possible. Partially used bundles shall be secured, to avoid individual sheets moving in strong winds.

A-2.2 Fixing of Decking

Decking sheets shall be fixed to the top of the supporting structure. All fixings shall be made through the troughs in the decking. Fixings shall be at approximately 300 mm centres (or in every trough) along the end supports, and at 600 mm centres (or in alternate troughs) along the internal supports. As an absolute minimum, each sheet shall be connected at least twice to each permanent support. The number and placement of fasteners will normally be given on the decking layout drawing. Fixings shall not be made to temporary supports.

The fixings, together with 'through-deck' welded studs (if present) normally provide lateral restraint to the beams during the construction stages.

ANNEX B

(*Clause* 11.3)

CONSTRUCTION PRACTICE FOR CONCRETING ON DECKING

B-1 PLACING CONCRETE

B-1.1 Preparation

Prior to beginning work on the decking, guardrails shall be in position at all perimeters, internal edges and voids. The positions of any props (and back props) shall be checked against the details shown on the decking layout drawings to ensure that adequate support has been provided.

B-1.2 Cleaning the Decking

The surface of the decking shall be reasonably free of dirt, oil, etc, prior to concreting.

B-1.3 Construction Joints

Although there is no technical limitation to the area that may be concreted, the usual pour area is up to 1 000 m^2/day. Where the limits of the pour do not coincide with permanent slab edges, construction joints are used to define the extent of the pour.

The locations and details of the construction joints may have an effect on the cracking. The layout and details of the joints shall be determined by the structural designer. For example, when brittle bonded finishes are used, the relationship between the joints in the concrete and the joints in the finishes shall be considered at the outset, to reduce the risk of cracking in undesirable locations.

Where possible, the construction joints shall be located close to butt joints in the decking. Where shear connectors are used, it is preferable to create the joint to one side of the line of the shear connectors, to ensure

sound concrete around the studs. If the construction joint cannot be made near a butt joint, it is suggested that no more than one-third of the decking span from a butt joint shall be left unpoured. Concreting shall not be stopped within a sheet length, because excessive deflections may occur when the loads on a continuous decking sheet are not balanced on either side of the intermediate support beam.

Stop ends, usually in the form of timber or plastic inserts, are used to create the construction joints. As with all the joints and ends of the decking, they shall be checked for potential grout loss.

B-1.4 Reinforcement

All reinforcement shall be properly supported so that it does not get displaced during concreting. Plastic stools, loops or preformed mesh may be used as 'chairs', but not plastic channels, which can induce cracking. Chairs shall be robust. In particular, the handling and movement of concrete carrying pipes during pumping can cause significant local impacts on the reinforcement.

The reinforcement that has been fixed shall be checked. Particular attention shall be given to checking any additional bar reinforcement, such as may be needed around openings.

B-1.5 Grout Loss

The decking joints shall be closely butted and exposed ends shall be 'stopped' with proprietary filler pieces to avoid grout loss. Gaps greater than 5 mm shall be sealed.

B-2 PLACEMENT

B-2.1 Concrete shall be placed in a way that minimizes the permanent deformation of the decking. This is particularly important for spans greater than 3 m. When concreting is progressed in the same direction as the span of the decking (that is parallel to the decking ribs), it shall be placed first over supports where the decking is continuous, followed by the mid-span region and finally the areas above the end supports. When concreting is progressed in a direction perpendicular to the decking span (that is transverse to the decking ribs), it shall be placed first at the edge where a decking sheet is supported by the underlap of an adjacent sheet. This helps to ensure that longitudinal seams between panels remain closed.

The concrete shall be well compacted, particularly near and around any shear connectors. This may be done using a vibrating beam, which may require adequate supports at either ends, or an immersion needle vibrator. Hand tamping is not recommended as a way of compacting the concrete. For slim floors with deep decking, or for other partially encased beams, a needle vibrator is needed to ensure proper concrete flow around the beams, beyond the ends of the decking.

B-2.2 Concrete Pumping

Pumping may be adopted for both normal and lightweight concrete mixes. Flow rates in the order of 0.5 m^3 to 1 m^3 of concrete per minute may be achieved, although, clearly, the longer the pump lines and the higher the concrete is to be pumped, the slower the operation. A pump may normally lift the concrete up to 30 m. Secondary pumps, placed at intermediate levels, may be necessary for higher lifts.

Pumplines are normally 150 mm in diameter and are assembled in segments. As the force exerted at bends may be significant, straight line pumping is preferred. The lines shall be supported on timber blocks at intervals of 2 m to 3 m. Resetting of pumplines is required at frequent intervals as the pour progresses. This means that the outlet pipe shall be moved frequently and carefully so that concrete heaping is minimized. A minimum of two operatives are necessary for this operation, one to hold and manoeuvre the outlet pipe, the other to shovel away excess concrete. No more than 4 workmen shall be present around the pipe outlet during pumping, because of the potential for overloading the decking. The concrete shall not be dropped from the outlet pipe onto the decking from a height of more than about 1 m.

B-2.3 Skip and Barrow

Placing concrete from a skip hung from a crane may be difficult because of obstructions from beams and decking at higher floor levels. However, despite being time consuming, it is sometimes efficient to use the skip and barrow technique for small infill bays.

Skips shall have a means of controlling the rate of discharge, and shall not be discharged from more than 0.5 m above the decking or barrow. When discharging into a barrow, the barrow shall be supported by thick (about 30 mm) boards covering a 2 m x 2 m area, or by a finished part of the slab. Either provision limits impact loads. Barrows shall be run over thick boards placed on the mesh, which shall be supported locally.

B-3 FINISHING, CURING AND DRYING

If power floating is to be carried out, this shall be done within 2 h to 3 h of casting. This allows time for the concrete to harden sufficiently.

As the concrete is only exposed on one surface of a composite floor, it can take longer than a traditional reinforced concrete slab to dry out.

LIST OF STANDARDS

The following list records those standards which are acceptable as 'good practice' and 'accepted standards' in the fulfilment of the requirements of the Code. The latest version of a standard shall be adopted at the time of enforcement of the Code. The standards listed may be used by the Authority for conformance with the requirements of the referred clauses in the Code.

In the following list, the number appearing in the first column within parantheses indicates the number of the reference in this Subsection.

	IS No.	*Title*
(1)	3935 : 1966	Code of practice for composite construction
(2)	3201 : 1988	Criteria for the design and construction of precast — Trusses and purlins (*first revision*)
(3)	6332 : 1984	Code of practice for construction of floor and roofs using precast doubly-curved shell units (*first revision*)
	10297 : 1982	Code of practice for design and construction of floors and roofs using precast reinforced/ prestressed concrete ribbed or cored units
	10505 : 1983	Code of practice for construction of floors and roofs using precast reinforced concrete waffle units
	13994 : 1994	Code of practice for design and construction of floor and roof with precast reinforced concrete planks and RC joists
	14142 : 1994	Code of practice for design and construction of floors and roofs with prefabricated brick panel
	14215 : 1994	Code of practice for construction of floor and roof with RC channel units
	14242 : 1994	Code of practice for design and construction of roof with L-Panel units
(4)	11447 : 1985	Code of practice for construction with large panel prefabricates
(5)	6061	Code of practice for construction of floor and roof with joists and filler blocks:
	(Part 1) : 1971	With hollow concrete filler blocks
	(Part 2) : 1981	With hollow clay filler blocks (*first revision*)

NATIONAL BUILDING CODE OF INDIA

PART 6 STRUCTURAL DESIGN

Section 8 Glass and Glazing

BUREAU OF INDIAN STANDARDS

CONTENTS

FOREWORD ... 3

1 SCOPE ... 5

2 TERMINOLOGY ... 5

3 APPLICATION ... 9

4 GENERAL METHODOLOGY FOR SELECTION ... 9

5 ENERGY AND LIGHT ... 16

6 FIRE AND LOADING ... 29

7 SAFETY RELATED TO HUMAN IMPACT ... 52

8 GLAZING SYSTEM ... 55

ANNEX A MINIMUM PERFORMANCE REQUIREMENT OF GLAZING FOR EXTERIORS ... 62

ANNEX B TEST REQUIREMENTS FOR COATED GLASS ... 63

ANNEX C PROCEDURE FOR CALCULATING THE APPROXIMATE DEFLECTION AT CENTRE OF GLASS PANEL ... 65

ANNEX D MODEL CALCULATION OF GLASS THICKNESS ... 66

ANNEX E SHOT BAG IMPACT TEST ... 67

ANNEX F PERFORMANCE TESTS FOR GLAZING SYSTEM ... 69

ANNEX G INSTALLATION OF MIRRORS ... 70

ANNEX H GLASS RAILINGS ... 71

LIST OF STANDARDS ... 79

FOREWORD

This Code (Part 6/Section 8) deals with the use of glass in buildings. Glazing has become an important item in building construction. Glass, the primary glazing element has to be selected to cater to several requirements and the glazing has to be designed to meet various engineering requirements. Fixing of glass a specialized operation, when properly done, will avoid the hazards of broken glass. Growing trend in resorting to glazed windows/doors in buildings and structures has considerably increased the importance of glazing and the need for proper workmanship. Considering all these, this Section is being introduced in this third revision of the Code.

This Section provides guidance in the selection of appropriate glazing for various types for building construction; guidance on the energy and light aspects while choosing glazing; guidance on determining the appropriate thickness of glass used in building glazing and guidance with respect to human impact safety while using glazing in buildings.

Use of organic coated films including safety films on glass shall not classify the glass as safety glass as per this Code, and hence users should exercise caution in choosing their options.

Information on installation of glass mirrors and glass railings are given in the informative Annexes G and H, respectively.

The information contained in this Section is largely based on the following Indian Standards:

IS No.	*Title*
IS 16231	Code of practice for use of glass in buildings:
(Part 1) : 2016	General methodology and selection
(Part 2) : 2016	Energy and light
(Part 3) : 2016	Fire and loading
(Part 4) : 2014	Safety related to human impact

Assistance has also been derived from the following publications in the formulation of this Section:

ISO 9845-1 : 1992	Solar energy — Reference solar spectral irradiance at the ground at different receiving conditions — Part 1: Direct normal and hemispherical solar irradiance for air mass 1,5
ISO 10291 : 1994	Glass in building — Determination of steady-state U-values (thermal transmittance) of multiple glazing — Guarded hot plate method
ISO 10292 : 1994	Glass in building — Calculation of steady-state U-values (thermal transmittance) of multiple glazing
ISO 10293 : 1997	Glass in building — Determination of steady-state U-values (thermal transmittance) of multiple glazing — Heat flow metre method

All standards, whether given herein above or cross-referred to in the main text of this Section, are subject to revision. The parties to agreement based on this Section are encouraged to investigate the possibility of applying the most recent editions of the standards.

For the purpose of deciding whether a particular requirement of this Section is complied with, the final value, observed or calculated, expressing the result of a test or analysis, shall be rounded off in accordance with IS 2 : 1960 'Rules for rounding off numerical values (*revised*)'. The number of significant places retained in the rounded off value should be the same as that of the specified value in this Section.

NATIONAL BUILDING CODE OF INDIA

PART 6 STRUCTURAL DESIGN

Section 8 Glass and Glazing

1 SCOPE

1.1 This Code (Part 6/Section 8) covers,

a) selection and application of glass in buildings, different types of glass, their requirements and associated glazing materials;

b) guiding provision for glazing in buildings with respect to their effect on energy, visual (light) and solar environments in the building;

c) selection of glass in buildings, subject to wind loading, seismic loading and special considerations for fire rated glass and related materials;

d) provisions for the selection, manifestation of glass in buildings, subject to safety with respect to human impact of the occupants; and

e) provisions relating to glazing systems such as selection, design, fabrication, installation, testing and maintenance.

1.2 This Section does not cover patent glazing.

NOTE — The provision of this Section pertains to glass and installation thereof. However, parties, as per their mutual agreement, may appropriately utilize the relevant provisions for installation of alternative sheeting materials used for similar purposes such as plastic glazing sheets/polycarbonate sheets taking also into account requirements of safety issues as applicable with the specific material.

2 TERMINOLOGY

For the purpose of this Section, the following definitions shall apply, and for other terms those given in accepted standards [6-8(1)] shall apply.

2.1 Annealed Glass (*see* **Glass**) — Also known as 'normal' glass, which has not been subjected to toughening, lamination and heat strengthening. It is the product obtained from the process of slow and steady cooling of hot glass in order to relieve internal stresses or thermal induced stresses.

NOTE — This term is most commonly used for flat glass.

2.2 Annealed Fire Resistant Glass — Type of glass which is made out of annealed glass combination and is tested for the required duration and satisfies the intended criteria of fire resistance. These types of glasses may not possess the best of the impact resistance characteristics and may be used as vision panels.

2.3 As-Cut Finished Sizes — Finished panes of flat glass cut from stock/standard sizes. They may be subject to further processing, such as edge working drilling, face decoration, etc.

2.4 Aspect Ratio — The ratio of a longer side of glass pane to its shorter side.

2.5 Balustrade — A low barrier forming a parapet to a stair, ramp, balcony, raised level or a change in level.

2.6 Beads or Glazing Beads — A strip of wood, metal or other suitable material attached to the rebate to retain the glass in position in the frame.

2.7 Bite — The minimum distance by which the inner edge of a frame (or a stop) overlaps the edge of the glass panel.

2.7.1 *Glazing Bite* — The dimension by which the framing system overlaps the edge of the glazing infill.

2.8 Block (Setting Block) — A small piece of wood, plastic, rubber or other suitable material used between the edges of the glass (generally the bottom edge only) to centralize the glass in the frame (frequently called a setting block).

2.9 Chair Rail — A fixed rigid bar that provides protection from human impact.

2.10 Clear Glass — A transparent glass with neutral/near colourless appearance.

2.11 Coefficient of Linear Expansion — It is expressed as the strain (change in length per unit length) per unit variation of temperature of a material.

2.12 Combustible Material — The material which when burnt adds heat to a fire when tested for combustibility in accordance with accepted standard [6-8(2)].

2.13 Corridor — A common passage or circulation space including a common hall.

2.14 Coupled Glazing (also known as Secondary Glazing) — Two panes of glazing spaced apart in an opening, either in the frame or glazed separately, to form an unsealed cavity.

2.15 Curtain Wall — Non-load bearing structure/partition of glass attached to the building frame, usually on the exterior face. Curtain wall vertical framing members run past the face of floor slabs, and provision for anchorage is typically made at vertical framing members only.

NOTE — In contrast to combination assemblies and composite units, curtain wall systems often need to meet additional performance requirements for inter-story differential movement, seismic drift, dynamic water infiltration, etc. Operating vents and entrance doors are provided as separate inserts.

2.16 Distance Piece — A small piece of wood or other suitable material used to locate the glass between the bead and the back of the rebate to prevent lateral movement.

2.17 Door or Shutter Assembly Door-Set — A pedestrian door-set or industrial type door-set including any frame or guide, door leaf or leaves, rolling or folding curtain, etc, which is provided to give a fire resisting capability when used for the closing of permanent openings in fire resisting separating elements, which includes any side panel(s), vision panel(s), flush over panel(s) and/or transom panel(s) together with the building hardware and any seals (whether provided for the purpose of fire resistance or smoke control or for other purposes such as draught or acoustics) which form the assembly.

2.18 Double Glazed Fire Resistant Glass — A fire resistant glass that is used in a double glazed unit.

NOTE — These shall be tested as a complete Double Glazed Unit (DGU) or other multiple glazed units as the case may be. Double glazed fire resistant glass can be a combination of intumescent laminated fire rated or tempered fire resistant glass. Fire resistant glass cannot be combined with another glass and used as a DGU unless the combined double glazed or multiple glazed units are also tested.

2.19 Double Glazing — Glazing formed by an assembly of two glass panes separated by a spacer and the gap may be filled by vacuum, air or inert gases and hermetically sealed along the periphery to improve the thermal insulation.

2.20 Edge Deterioration — The discolouration of the reflective coating at the edge of the silvered glass.

2.21 Edge Faults — The faults that affect the as-cut edge of the glass. They may include entrant/emergent faults, shelling, corners on/off and vents.

2.22 Edge Polished — It is usually applied to flat glass, the edges of which have been polished after cutting.

2.23 Edging — Grinding the edge of flat glass, to a desired shape or size.

2.24 Exposed Edge — A glass panes' edge that is not covered.

2.25 Facade — It is the front or face of the building which is part of framed or frameless system.

2.26 Faceted Glazing — It is a type of glazing in which flat panes of glass are installed vertically at an angle to each other to form a faceted surface.

2.27 Fenestration — All area (including frame) in the building envelope that let in light, including window, plastic panels, clerestories, skylight, fanlight and glass doors that are generally more than one-half the floor height, and glass block walls.

2.28 Fin — A piece of glass positioned and fastened to provide lateral support.

2.29 Fire Separation — The distance, in metre, measured from the external wall of the building concerned to the external wall of any other building on the site, or from other site, or from the opposite side of street or other public space for the purpose of preventing the spread of fire.

2.30 Float Glass — Flat, transparent, clear or tinted soda-lime silicate glass having parallel and polished surfaces obtained by continuous casting and floatation on a metal bath.

NOTE — Flat glass is a general term covering sheet glass, float glass and various forms of rolled and plate glass in which shape of the glass is flat and commonly used for windows, glass doors, transparent walls and other architectural applications.

2.31 Flush Over Panel — A panel which is incorporated within a door-set or openable window and fitted above the leaf or leaves within the frame head and the jambs and with no transom.

2.32 Frame — An element made of timber/metal/aluminium or other durable material/combinations of materials, such as glass fins and structural sealant, supporting the full length of a glazed panel edge.

2.33 Frameless Glazing — An unframed glazing which maintains the integrity through pointed support structures.

2.34 Front Putty — The compound forming a triangular fillet between the surface of the glass and the front edge of the rebate.

2.35 Fully Framed Glazing — The glazing whose panels have all its four edges framed.

2.36 Gap — A clearance between two adjacent surfaces and/or edges, for example between the edge of the leaf and the reveal of the frame or between the face of the leaf and the frame stop.

2.37 Glass — An inorganic product of fusion which has cooled to a rigid condition without crystallizing. It is typically hard and brittle, and has a conchoidal fracture. It may be colourless or tinted and transparent to opaque. The term glass refers to monolithic glass unless specified otherwise.

2.38 Glass Appearance Faults — Faults such as spot and/or linear and/or enlarged area faults which alter the visual quality of glass.

2.39 Glazing — Act of securing of glass or other glazing material into a building in prepared openings in windows, door panels, partitions, etc.

2.40 Guard Rail — A permanent physical barricade used to prevent human impact on glass/glazing.

2.41 Hairline Scratch — Very fine scratch that can hardly be seen with naked eye and is associated with glass cleaning techniques.

2.42 Halo — It is the distortion zone around a spot fault.

2.43 Heat Soaking — It is done on toughened/tempered glass by reheating to a temperature of 290°C and keeping it at this temperature for 8 h and cooling it gradually. The glass can break spontaneously and without provocation due to possible impurity of nickel sulphide in basic glass used for toughening/tempering. This risk of spontaneous breakage can be minimised by heat soaking process by forcing such glasses to break during the test itself.

2.44 Heat Strengthened Glass — Glass within which a permanent surface compressive stress has been induced by a controlled heating and cooling process in order to give it increased resistance to mechanical and thermal stress and prescribed fracture characteristics.

2.45 Hermetic Seal — A complete seal (especially against the escape or entry of air which is impervious to outside interference or influence) done on insulating glass units.

2.46 High Activity Area — An area where multiple and major human activity takes place.

2.47 High Risk Area — An area prone to human injury and causality.

2.48 Infill Balustrades — The balustrades in which the supported glass resists an infill pressure and/or point load applied to the glass panel.

2.49 Insulating Glass Unit (IGU) — An assembly consisting of at least two panes of glass, separated by one or more spaces, hermetically sealed along the periphery, mechanically stable and durable.

2.50 Interlayer — Layer or material acting as an adhesive and separator between plies of glass and/or plastic glazing sheets.

NOTE — It can be designed to give additional performance to the finished product, for example impact resistance, fire resistance, solar control and acoustic insulation

2.51 Internal Partition — An interior dividing wall or such portion of an interior dividing wall that is not a door, side panel, shop front or atrium wall.

2.52 Laminated Safety Glass — It is a glass made of two or more pieces of glass which are held together by an interleaving layer or layers of plastic materials.

2.53 Light Transmission — It is the measure of light passing through a transparent or a translucent material.

2.54 Light Transmittance — It is the measure of percent of visible light transmitted through glass pane which depends on type of body substrate and coating done on glass.

2.55 Linear Defects — They are the scratches and extended spot faults on the glass.

2.56 Manifestation — Any technique for enhancing a person's awareness of the presence of transparent glass.

2.57 Maximum Thickness — The thickness of a pane of glass at the maximum thickness tolerance.

2.58 Minimum Thickness — The thickness of a pane of glass at the minimum thickness tolerance.

2.59 Modulus of Elasticity (Young's Modulus) — This modulus expresses the tensile force that theoretically has to be applied to a glass specimen to stretch it by an amount equal to its original length. It is expressed as a force per unit area (for glass, $E = 0.7 \times 10^5$ N/mm^2 = 70 GPa).

2.60 Monolithic Glass — A single sheet of flat glass which could be either annealed, toughened or heat strengthened.

2.61 Mullion — Vertical framing member separating and supporting two adjacent panes of glass or panels.

2.62 Nominal Thickness — A numeric designation that indicates the approximate thickness of glass.

2.63 Non-Combustible Material — A material not liable to burn itself or to add heat to a fire when tested for combustibility in accordance with good practice [6-8(2)].

2.64 Organic Coated Glass — A sheet of glass coated on one or both sides with an applied organic coating or sheeting.

2.65 Pane — A single piece of glass or plastic glazing sheet material in a finished size ready for glazing.

2.66 Panel — An assembly containing one or more panes of glass.

2.67 Partition — It means an interior non-load bearing divider, one storey in height or part.

2.68 Partly Framed or Unframed Glazing — The panels that have one or more edges unframed.

2.69 Passive Solar Gain — The solar radiation in the form of energy and light which is transmitted through the glazing into the building and which can be utilized as a source of energy to reduce the need for artificial lighting.

2.70 Patterned Glass — A rolled glass having a distinct pattern on one or both surfaces.

2.71 Protective Coating(s) Faults — The faults where the metallic layer is exposed. They can be scratches or loss of adhesion of the protective coating(s).

2.72 Rebate — The part of a surround; the cross-section of which forms an angle into which the edge of the glass is received.

2.73 Reflective Coated Glass — It is a glass with reflective coating which uses the principle of increasing the direct reflection to maximize solar energy attenuation. In comparison with clear glass, its absorption of solar energy is also increased.

NOTE — In comparison with float glass surface, these reflecting coatings (due to their composition) exhibit lower level of emissivity which improves their *U*-value.

2.74 Reflective Silver Coating Faults — It is the fault on reflective silver layer which shall alter the appearance of the silvered glass. They consist of scratches, stains, colour spots and edge deteriorations.

2.75 Residual Protection — It is the protection provided to avoid the human impact on glass. It is provided on the side of glass where there are chances of human impact. It can be achieved by providing a sill structure or a grill inside.

2.76 Shading Coefficient — The ratio of the rate of solar heat gain through a specific unit assembly of glass to the solar heat gain through a single light of 3 mm clear glass in the same environment.

2.77 Sheet Glass — Glass made in large sheet directly from furnace or by making a cylinder and then flattening it.

NOTE — These transparent glass have a glossy, fire-finished, apparently plane and smooth surfaces, but having a characteristic waviness of surface.

2.78 Skylight — A fenestration surface having a slope of less than 60° from the horizontal plane. Other fenestration, even if mounted on roof of a building is considered as either a vertical glazing or sloped glazing depending upon the angle of the glazing.

2.79 Sloped Overhead Glazing — A glazing that is inclined at less than 75° to the horizontal and located, wholly or partially, directly above an area that may be used by people.

2.80 Solar Energy Absorption — The percentage of the solar spectrum energy (ultraviolet, visible, and near-infrared) from 300 nm to 2 500 nm that is absorbed by a glass product.

2.81 Solar Energy Transmittance (Direct) — The percentage of energy in the solar spectrum, ultraviolet, visible, and near-infrared energy, 300 nm to 2 500 nm, that is directly transmitted through the glass.

2.82 Solar Heat Gain Coefficient (SHGC) — The SHGC is the fraction of incident solar radiation admitted through a fenestration, both directly transmitted, and absorbed and subsequently released inward through conduction, convection and radiation.

2.83 Spandrel — A non-vision portion of the exterior wall of a building.

2.84 Spot Faults — The nuclei (solid or gaseous inclusions), deposits, crush marks, etc, in the glass. In certain instances spot faults are accompanied by a distortion zone called 'halo'. The nucleus of the spot fault is measurable.

2.85 Stain — An alteration of the reflective coating characterized by a more or less brownish, yellowish or greyish colouration of zones which can sometimes cover the whole reflective surface.

2.86 Stock/Standard Sizes — The panes of flat glass such as coated, mirror, enamelled glass, etc, supplied with as-cut edges which are intended for further processing. These are generally corresponded with manufacturer's production size.

2.87 Tempered or Toughened Glass — Flat glass within which a permanent surface compressive stress has be induced by a controlled heating and cooling (quenching) process in order to give it greatly increased resistance to mechanical and thermal stress and prescribed fragmentation characteristics.

2.88 Tempered Fire Resistant Glass — A single piece of specially thermally-treated or chemically treated glass, tested for fire resistance for the required duration and having such a stress pattern that the piece when fractured, it reduces to numerous granular fragments, with no large jagged edges.

2.89 Thermal Transmittance (*U*) — Thermal transmission through unit area of the given building unit divided by the temperature difference between the air or other fluid on either side of the building unit in steady state conditions. It is also called as *U*-value. Its unit is W/m^2K.

NOTES

1 Thermal transmittance differs from thermal conductance insofar as temperatures are measured on the two surfaces of a building unit in the latter case and in the surrounding air (or other fluid) of the material on the two sides, in the former case. Thermal conductance is a characteristic of the building unit whereas thermal transmittance depends on conductance and surface coefficients of the building unit under the conditions of use.

2 In the case of glazing, thermal transmission is taken through the central part of the glazing, that is, without edge effects.

2.90 Through Component/Connection — The internal spacer or fixing that either penetrates through the door-set or openable window from one face to another or directly connects the faces of one to the other.

2.91 Tinted Glass — A normal flat glass to which colourants (normally metal oxides) are added during

manufacturing process to achieve tinting and solar radiation absorption properties. It is also referred to as body tinted glass.

2.92 Toughened Safety (Tempered) Glass — A single piece of specially heat-treated glass, with a stress pattern such that the piece when fractured reduces to numerous granular fragments, with no large jagged edges.

2.93 Transom — A horizontal cross bar connecting two vertical members in a glazing frame.

2.94 Unframed Glazing — A glazing with one or more edges unframed.

2.95 UV Transmittance — The percentage of energy in the ultraviolet (UV) spectrum from 300 nm to 380 nm that is directly transmitted through the glass.

2.96 Vertical Fenestration — All fenestration other than skylights. Trombe wall assemblies, where glazing is installed within 300 mm of a mass wall are considered walls and not fenestration.

2.97 Wired Glass — It is a type of glass into which a wire mesh is embedded during production. Wired glass has an impact resistance similar to that of normal glass, but in case of breakage, the mesh retains the pieces of glass.

3 APPLICATION

The type of glass chosen shall satisfy the following criteria:

a) For a given application, the type and thickness of glass selected shall be in accordance with the requirements provided herein and the thickness calculation as subjected to wind load shall also satisfy requirements for human impact safety.

b) Installation of glass to the building is done in accordance with the various provisions available in this Section and in the absence of any specific provisions the same shall be as per manufacturer's instructions.

c) Optical, solar, thermal performance of glazing (clear/tinted/coated reflective glass) shall have the characteristic performances, such as:

   1) Spectral transmittance, external and internal spectral reflectance;
   2) Light transmittance, external and internal light reflectance;
   3) Solar direct transmittance and reflectance;
   4) UV transmittance; and
   5) Better thermal transmittance (*U*-value).

4 GENERAL METHODOLOGY FOR SELECTION

4.1 Selection

4.1.1 Right from the initial project evaluation stage, a suitable methodology that incorporates the implications of use of glass materials and their influence on performance of the building shall have to be looked into. A typical flowchart outlining such a methodology is provided for the users of this Section (*see* Fig. 1).

It is assumed that,

a) the location of area to be glazed and its preliminary size/shape have been decided as part of normal building design process.

b) the designer has gained information on glass/ and plastic glazing sheet materials used in similar circumstances.

c) the designer is cognizant of implications of any innovation in design.

4.1.2 Design requirement including aesthetic considerations and client specified requirements such as security and maintenance to be considered.

4.1.3 Effect of design on cost such as initial cost of glazing (specification of glass/plastic sheeting material; glazing method; access for initial glazing; work schedule; protection during construction); effect of glass/plastic sheeting material on capital/running cost related to building heating/cooling, lighting and ventilation; and maintenance cost of glazed areas (access for cleaning and reglazing) should be considered.

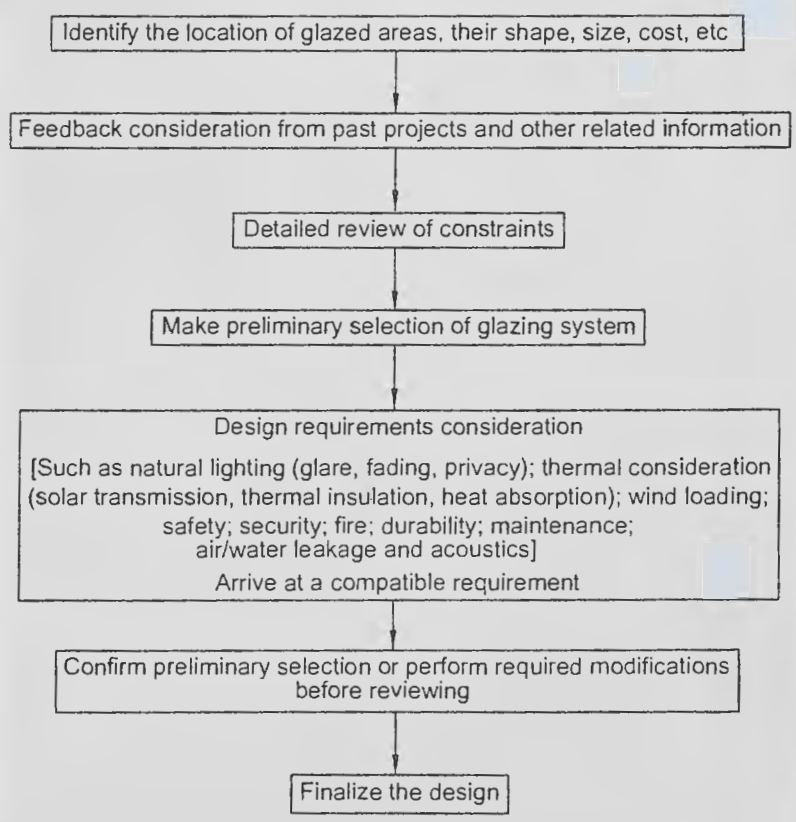

FIG. 1 TYPICAL SEQUENCE OF DESIGN EVALUATION FOR GLAZED AREAS

4.1.4 Selection of appropriate glass may be done considering the cost benefit analysis in respect of the benefit accrued against the alternatives available. Also, the comparative cost of glazing materials should be considered together with their life expectancy and probability of need for maintenance. In the context of selection of glass, the provisions given in the Part 11 'Approach to Sustainability' of the Code may also be considered in addition to the cost benefit analysis on the use of glass *vis-a-vis* use of other alternatives. To suitably modify to indicate that the selection of appropriate glass may be made considering the cost benefit analysis in respect of the benefit accrued against the alternatives available.

4.2 Types of Glass

4.2.1 The soda lime silicate glass is classified based on the type of internal stress which determines the strength of the glazing towards breakage, design and installation procedure and based on application. Table 1 gives the typical properties of various types of glass.

4.2.2 *Normal (Annealed) Glass*

For requirements including tests on nominal thickness of annealed (flat) glass {*see* Table 1 of accepted standard [6-8(3)]}. Flat transparent sheet glass shall conform to the following classes as specified in accepted standard [6-8(3)] namely; A quality or Selected Quality (SQ), B quality or Ordinary Quality (OQ) and C quality or Greenhouse Quality (GQ). Transparent float glass shall be as per accepted standard [6-8(4)].

A transparent flat glass is designated as clear glass when it is not tinted and when its light transmittance after any necessary pre-treatment is greater than the value prescribed in Table 2 for the nominal thickness.

4.2.3 *Laminated Glass*

4.2.3.1 Laminated glass is a glass configuration made of two or more pieces of glass bonded together by interlayer/interlayers. It is commonly used as a form of safety glass which cracks and breaks under sufficient impact, the broken glass fragments being still held together. When laminated glass is broken, fragments tend to adhere to the interlayer. For requirements of laminated safety glass, accepted standard [6-8(5)] may be referred.

4.2.3.2 Laminated glass does not shatter like ordinary glass. It absorbs impact, resists penetration, and remains intact even if broken, holding glass fragments in place and lowering the risk of injury. Laminated glass is capable to stop flying debris and limit or avoid splintering on opposite side of the impact. When exposed to heat from solar radiation resulting in unequal temperature in the pane, laminated glass breaks but stays in place longer. The risk of thermal breakage is reduced only when heat strengthened/tempered laminated glass is used.

Table 1 Typical Properties of Various Types of Glass

(*Clause* 4.2.1)

Sl No.	Properties	Annealed Glass	Float Glass	Annealed Laminated Glass	Tempered or Toughened Glass
(1)	(2)	(3)	(4)	(5)	(6)
i)	Modulus of rupture	40 N/mm^2	40 N/mm^2	40 N/mm^2	120 to 200 N/mm^2
ii)	Thickness	As per accepted standard [6-8(3)]	As per accepted standard [6-8(4)]	6.38 - 19 mm	3 - 19 mm
iii)	Density (approximate)	← 2 400 – 2 550 kg/m^3 →			
iv)	Modulus of elasticity	← 70 GPa →			
v)	Coefficient of linear expansion	← 9×10^{-6} m/m K →			
vi)	Compressive strength	← 1 000 N/mm^2 →			

NOTE — Conventionally, the following types of glass exist:

a) Annealed (clear) glass.

b) Extra clear glass.

c) Body tinted glass.

d) Coated glass (including Lacquered glass).

1) Online coated glass.

2) Offline coated glass.

e) *Processed glass* — Each of the glasses (a) to (e) above can be subjected to further processing to produce the following types:

1) Heat strengthened,

2) Toughened or tempered,

3) Double glazed unit,

4) Laminated glass (Single laminated),

5) Laminated double glass unit,

6) Ceramic/screen printed fritted glass (patterned glass), and

7) Fire safety glass.

4.2.3.3 Laminated glass can be made from the following typical combinations:

a) Glass which is float/sheet/patterned/polished wired/wired patterned glass, and may be having the following properties:

1) clear, tinted or coated;

2) transparent, translucent or opaque;

3) annealed, heat strengthened or toughened; and

4) surface treated (such as acid etched or by sandblast).

b) Plastic glazing sheet material which can be polycarbonate or acrylic and may be having the following properties:

1) clear, tinted or coated; and

2) transparent or translucent.

Table 2 Minimum Light Transmittance Value (Designating a Transparent Glass as Clear Glass)

(*Clause* 4.2.2)

Nominal Thickness, mm	2	3	4	5	6	8	10	12	15	19	25
Minimum Value of Light Transmittance, Percent	89	88	87	86	85	83	81	79	76	72	67

c) Interlayers which differ based on material type and composition; mechanical characteristics; and optical characteristics, and may be having the following properties:

1) Clear or coloured;

2) Transparent, translucent or opaque; and

3) Coated.

NOTE — Until standards on plastic glazing sheet materials and interlayers are formulated, they will be subject to the specifications of manufacturers of laminated glazing materials.

4.2.4 *Toughened or Tempered Glass*

4.2.4.1 Toughened glass is a type of safety glass which is heat treated to a uniform temperature of approximately 650°C and rapidly cooled to induce compressive stresses of 75.5 MPa (770 kg/cm^2) to 143.4 MPa (1 462 kg/cm^2) on the surfaces and edge compression of the order of 66.7 MPa (680 kg/cm^2). For requirements of toughened safety glass, accepted standard [6-8(5)] may be referred.

4.2.4.2 Toughened glass gains its added strength from the compressed surfaces. However, if a deep scratch or an impact penetrates the surface, the glass shall break into a number of small particles. Any attempt to cut, drill, grind or sand blast the glass after toughening may result in glass breakage. The heat treatment process does not change the light transmission and solar radiant heat properties of the glass.

4.2.4.3 Toughened glass provides greater thermal strength. It increases resistance to both sudden temperature changes and temperature differentials up to 250°C compared with normal glass, which can withstand temperature differentials up to 40°C only. Thermally toughened glass is approximately four times stronger than annealed glass of the same thickness and configuration, and shall comply with the requirements of accepted standard [6-8(5)]. Toughened glass is difficult to break and when broken, it breaks into many relatively small fragments, which are less likely to cause serious injury to people, as there are no jagged edges or sharp corners like in normal glass. On the contrary, the toughened glass is also susceptible to breakage when hit with a small tap at its edge using a hammer or a hard object. Toughened glass is often referred to as safety glass because it meets the requirements of the standards which apply to safety glass. Toughened glass cannot be subjected to further processing, such as cutting, drilling, edge grinding after toughening and any alterations such as sandblasting or acid etching will weaken glass and can cause premature failure (*see* Notes).

Float glass contains some level of imperfection. One type of imperfection is nickel sulphide (NiS) inclusions. Most NiS inclusions are stable and cause no problems. There is, however, the potential for NiS inclusions that may cause spontaneous breakage in fully tempered glass without any load or thermal stress being applied. Heat soak testing is a process that exposes critical NiS inclusions in fully tempered glass. The process involves placing the tempered glass inside a chamber and raising the temperature to approximately 290°C to accelerate nickel sulphide expansion. This causes glass containing nickel sulphide inclusions to break in the heat soak chamber, thus reducing the risk of potential field breakage. However, the heat soak process is not 100 percent effective.

NOTES

1 The process of toughening is used to increase the strength of glass and to produce fracture characteristics that are desirable in many situations. However, the process of toughening can also lead to an increased risk of spontaneous glass fracture (associated with material impurities). Accordingly, the possibility of spontaneous fracture should be taken into account when toughened glass is used.

2 Heat soaking may minimise the risk of nickel sulphide induced spontaneous fracture in toughened glass. Glass manufacturers maybe consulted for advice relating to anticipated nickel sulphide minimization.

4.2.5 *Heat Strengthened Glass*

Heat strengthened glass is a type of tempered glass which has been strengthened thermally by inducing a surface compression of about 44.3 MPa (422 kg/cm^2) to 64.5 MPa (658 kg/cm^2) as compared to a range of 75.5 MPa (770 kg/cm^2) to 143.4 MPa (1 462 kg/cm^2) in case of fully tempered glass. Heat strengthened glass is valued for its mechanical strength, which is twice that of normal annealed glass though half of toughened glass. With the exception of strength and thermal resistance characteristics, heat strengthened glass retains the normal properties of annealed glass. Heat

strengthened glass provides necessary resistance to thermal stress associated with high performance glazing materials such as tinted glass and reflective glass. It also provides necessary resistance to heat building up when used as spandrel glass. Heat strengthened glass with its flatter surface also results in the facade having less optical distortions. Heat strengthened glass shall have a surface compression of 24 - 52 MPa.

NOTES

1 Heat strengthening associated with relatively less residual stresses ≤ 52.0 MPa has lower risk of spontaneous glass fracture (associated with material impurities).

2 Surface compression (including fragmentation), four point bending, warp and waviness tests are typically carried out to determine the characteristics of heat strengthened glass.

4.2.6 *Reflective Glass*

A metallic coating is applied to one side of the glass in order to significantly increase the amount of reflection by the glass of both the visible and infrared (light and heat) ranges of the electromagnetic spectrum. This metallic coating can be applied to clear or body tinted glass, without adversely affecting the transparency of the glass. The reflective glass imparts an enhanced appearance to the exterior of buildings due to the coating of metal oxides on the glass. It is widely applied as an aesthetic and energy efficient product in buildings for its highly reflective surface and wide palette of colours. It reduces heat gain and glare from the exterior and allows optimum visible light transmission to the interior. If designed/used properly, reflective glass can aid at reducing the air conditioning load of buildings

NOTE — Highly reflective glass should be avoided, especially in internal environments. The reflections from these surfaces can be particularly confusing for persons with vision impairment.

4.2.7 *Insulating Glass Unit*

Insulating glass unit, a prefabricated unit of glass having an edge seal that not only binds the individual sheets of glass together to maintain the mechanical strength of the joint but also protects the cavity between the glasses from outside influences. The moisture in the cavity between the two glasses is controlled by desiccants filled in the perforated spacer. The spacer may be aluminum, composites, plastics, etc. The spacer ensures the precise distance between the glass panes. The cavity is normally filled with dry air but can be also filled with gases such as argon or krypton for better thermal performance. The low heat conductivity of the enclosed dry gas between the glass panes drastically reduces the thermal heat transmission through the glass to 2.8 W/m^2K (12 mm spacer between two 6 mm glass) as compared to 5.73 W/m^2K for normal 6 mm glass. It also helps in reducing the direct solar energy specifically when the outer pane is a solar control glass. For sizes greater than 3 m^2, the thickness of the spacer shall be chosen such that physical contact of glass panes (white spots) does not occur.

NOTE — Moisture penetration test and argon/krypton gas level test are typically carried out to determine the characteristic of IGUs.

4.2.8 *Wired Glass*

The general requirements including thickness, dimensional tolerance and tests for wired glass as specified in accepted standard [6-8(6)] are valid.

4.2.9 *Glass Fins*

When glass fins are used as a decorative member, it can be either toughened (tempered) or laminated glass.

When glass fins are used as a structural member, it shall be toughened and laminated. The depth and thickness may vary as per elevation and wind load requirements. Design should also accommodate movements. It is recommended to use finite element analysis to determine the appropriate glass fin sizes.

4.3 Application

Glass can be designed/suited to use in building occupancies such as in residential, assembly and mercantile in elements such as façades, windows, doors, partitions, display units, shop fronts, greenhouses (where plants are grown), atrium. Different types of glass are selected based on requirements. For safety against accidental breakage and strength requirement (mechanical and thermal), toughened glass or laminated glass may be considered over annealed glass. For increased high security requirements, acoustic insulation, sloped glazing and skylights, laminated glass may be considered.

4.4 Associated Glazing Materials

4.4.1 *Structural Sealant*

The structural sealant could be of silicone type with requirements meeting the design criteria. Structural sealant shall be shelf-stable, natural-cured, elastomeric adhesive exhibiting the desired adhesion to building substrates. The structural sealant may require cleaning and or priming to get good adhesion for structural glazing application. For laminated glass applications where glass edges are sealed with a sealant, compatibility shall be ensured with the interlayer to avoid delamination.

4.4.2 *Gaskets*

Gasket is a mechanical seal that fills the space between two mating surfaces, to prevent leakage from or into the joined objects and will be able to deform while under compression and tightly fills the space it is designed for, including any slight irregularities.

4.4.3 *Preformed Tape*

Typical requirements of preformed butyl and foam tapes shall be as given in Table 3.

4.4.4 *Setting Blocks, Location Blocks and Distance Pieces*

Setting blocks, location blocks, and distance pieces shall be designed in accordance with **6** which are,

a) resilient, load-bearing, non-absorbent and rot-proof materials; and

b) compatible with all other materials that may come in contact with them.

4.5 General Requirements

4.5.1 Glazing and associated materials used for the proper installation shall satisfy the minimum dimensional and framing requirements in accordance with the procedures given in this Section. The dimensional and thickness tolerance of the glass used in exterior and interior is determined from the provisions given hereunder.

4.5.2 *Dimensional Requirement*

4.5.2.1 The dimensions for edge clearance, edge cover, and front and back clearance, as defined in Fig. 2, shall be not less than the values given in Table 4.

NOTE — For glazing systems where the framing member is aluminium or steel and gaskets are used to capture the glazing, minimum glazing bite of 12.7 mm is recommended for architectural glazing.

4.5.2.2 *Front putty width*

The front putty width shall be not less than 10 mm for panels up to 1 m^2, and not less than 12 mm for panels between 1 m^2 and 2 m^2.

Table 3 Typical Properties of Preformed Tapes

(*Clause* 4.4.3)

Sl No. (1)	Properties (2)	Requirement (3)
i)	Low temperature flex	No cracks at –23°C
ii)	Weight loss	2 percent, *Max*
iii)	Vehicle migration	1 paper stained maximum and this stain shall be no more than 3.2 mm from edge of sample maximum
iv)	Backing removal	No transfer of tape compound to the paper
v)	Yield strength	41.4 kPa, *Min*
vi)	Compression/Recovery	Compression index, 1.22 N/mm^2, *Max*
vii)	Water absorption	Weight gain *Max* after boiling, 40 kg/m^3, *Max*
viii)	Flow test	Loss of height, 60 percent, *Max*

4.5.2.3 *Dimensions of rebates and grooves (width and depth)*

Dimensions of rebates and grooves shall accommodate the requirements of Table 4 and allow for the appropriate setting and location blocks (*see also* **6**).

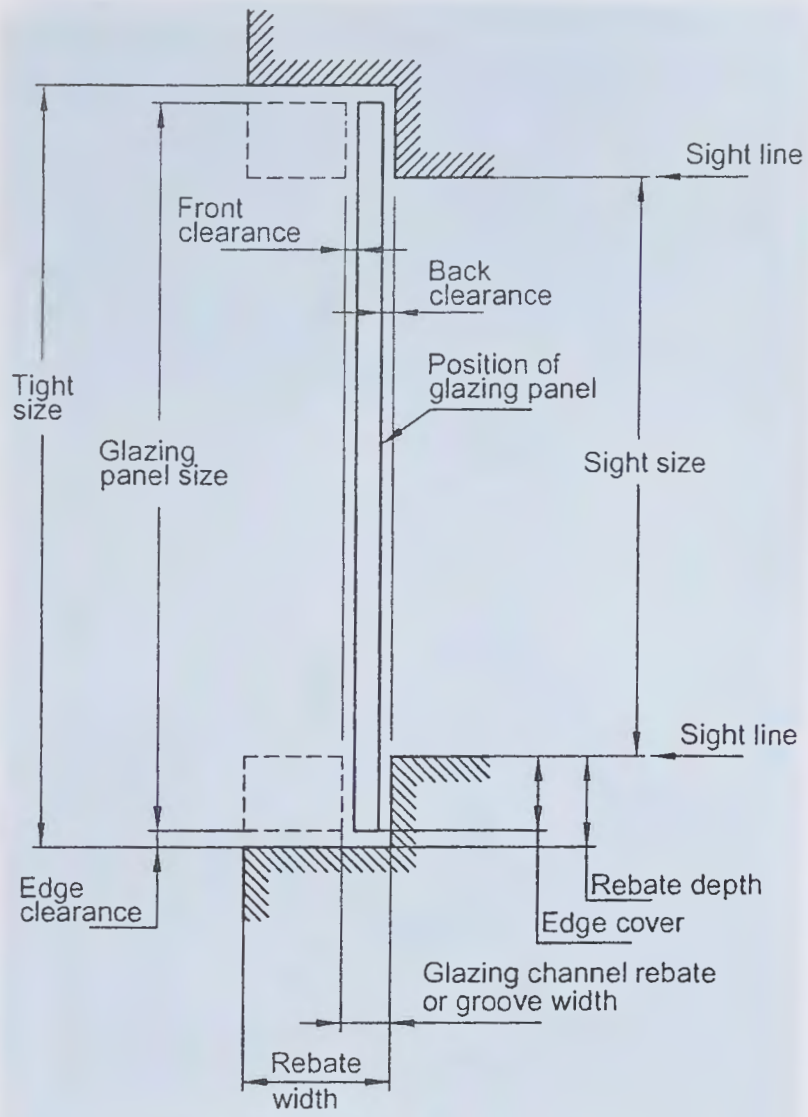

FIG. 2 SIZES AND REBATES

4.5.2.4 *Glass dimensional tolerance*

The tolerance for dimensions shall be as per those in the respective list of Indian Standards.

4.6 Frame Requirements

4.6.1 When completely assembled and glazed, the secondary design action effects due to deflection of the frame member supporting the edge of the glass shall be allowed for.

4.6.2 *Deflection Limits*

The frame deflection limits under serviceability loading shall satisfy the conditions for four sided frames as given in **6.3.6.2**(c).

NOTE — In framing members, where reinforcement/fixing brackets are required to meet the deflection/stress criteria, it may be of aluminium or steel. When steel is used, proper dielectric galvanic separation shall be used. The material chosen for reinforcement shall be in close proximity in the galvanic series, to ensure dielectric separation.

4.6.3 *Panels Glazed into the Building Structure*

A panel glazed directly into a building structure by means of appropriate beads or stops shall be considered to be framed, provided the assembly complies with the deflection requirements of **4.6.2**.

Table 4 Minimum Dimensions for Glazing Material

(*Clause* 4.5.2.1)

All dimensions in millimetres.

Sl No.	Nominal Thickness	Front and Back Clearance			Edge Clearance	Edge Cover	Rebate Depth
		Type A (*See* Note 1)	Type B (*See* Note 2)	Type C (*See* Note 3)			
(1)	(2)	(3)	(4)	(5)	(6)	(7)	(8)
i)	3 (for pane area up to 0.1 m^2)	2	—	—	2	4	6
ii)	3 (for pane area > 0.1 m^2)	2	—	—	3	6	9
iii)	3	—	2	1	3	6	9
iv)	4	2	—	—	2	6	8
v)	4	—	2	1	3	6	9
vi)	5	2	2	2	4	6	10
vii)	6	2	2	2	4	6	10
viii)	8	—	3	2	5	8	13
ix)	10	—	3	2	5	8	13
x)	12	—	3	2	6	9	15
xi)	15	—	5	4	8	10	18
xii)	19	—	5	4	10	12	22
xiii)	25	—	5	4	10	15	15

NOTES

1 Type A applies to linseed oil and metal casement putties.

2 Type B applies to non-setting glazing compounds, plastic glazing compounds, two-part rubberizing compounds, sealants and preformed strip materials.

3 Type C applies to gaskets made from extruded materials such as butyl strip, PVC, neoprene and sanoprene held in position by pressure upon the glass.

4 For non-standard glass thicknesses the nearest values of nominal thickness, shall be used.

5 Timber and PVC frames may not require the specified front and back clearances provided the waterproofing performance requirements are met.

6 The dimensions are the minimum necessary for the structural integrity of glass only but do not apply to insulating glass units.

4.6.4 *Mixed Framing*

Glass supported along the top and bottom edges by one means and along the vertical edges by another means shall be considered to be framed provided each frame member of the assembly complies with the deflection requirements of **4.6.2**.

4.7 Glass Dimensions

4.7.1 The actual thickness for exterior and interior glass [other than DGU (Double Glazing Unit)] use shall be measured using screw caliper {for example as per **5.1** of accepted standard [6-8(3)]}.

The actual thickness of glass. rounded to the nearest 0.1 mm shall not vary from the nominal thickness by more than the tolerances specified in respective Indian Standard or the values provided in this Section (unless Indian Standard specification is developed).

The minimum thickness allowed in insulated glass unit (IGU) should be the sum of minimum thickness allowed of two panes as per accepted standard [6-8(4)] plus thickness of air-gap.

The minimum thickness allowed in laminated glass should be the sum of minimum thickness allowed of two panels as per accepted standard [6-8(4)] plus thickness of interlayer (*see* Table 5).

Table 5 Thickness and Tolerances for Laminated Glass

(*Clause* 4.7.1)

All dimensions in millimetres.

Thickness	6	8	10	12	16	20	24
Tolerance	± 0.6	± 0.6	± 0.6	± 0.6	± 1.2	± 1.2	± 1.2

4.7.2 Length and width are defined with reference to the direction of draw of the flat glass ribbon (*see* Fig. 3).

4.7.3 *Jumbo Sizes*

Glass is available commonly in the sizes of nominal length (*H*) 4 500 mm to 6 000 mm and nominal width (*B*) 3 660 mm or 3 210 mm.

NOTE — The usual width is 3 660 mm or 3 210 mm. Other sizes may be mutually agreed to between the manufacturer and the user based on their requirement.

4.7.4 *Stock Size*

Glass is available commonly in the sizes of nominal

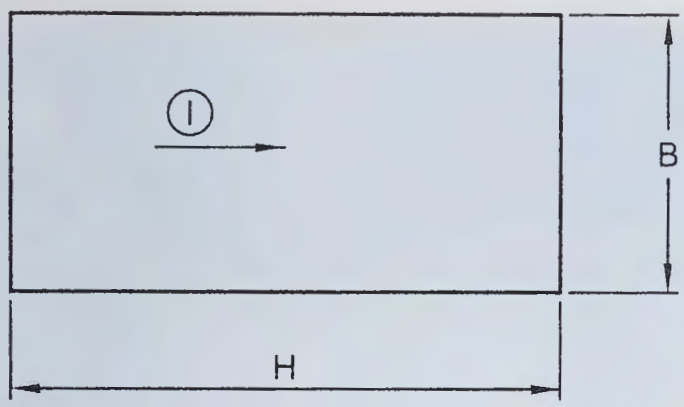

H - Length
B - Width
I - Direction of draw

FIG. 3 REPRESENTATION OF LENGTH, WIDTH AND DIRECTION OF DRAW

length (H) 2 250 mm or 2 440 mm and nominal width (B) 3 660 mm or 3 210 mm.

NOTE — Maximum glass size available from manufacturer are one consideration, the processing equipment limitation, capabilities of contract fabricator to install unit, availability of specialized transport and handling equipment to deliver unit should be checked in addition.

4.7.5 *Split Sizes*

Glass is delivered in equal or unequal split sizes from the jumbo or stock size.

4.7.6 *Squareness*

The nominal dimensions for length (H), and width (B), be given, the pane shall not be larger than a prescribed rectangle resulting from the nominal dimensions increased by the permissible plus tolerance or smaller than a prescribed rectangle reduced by the permissible minus tolerance.

The sides of the prescribed rectangles (*see* Fig. 4) shall be parallel to one another and these rectangles shall have a common centre. For stock/standard sizes the tolerances on nominal dimensions length (H), and width (B), are ± 5 mm.

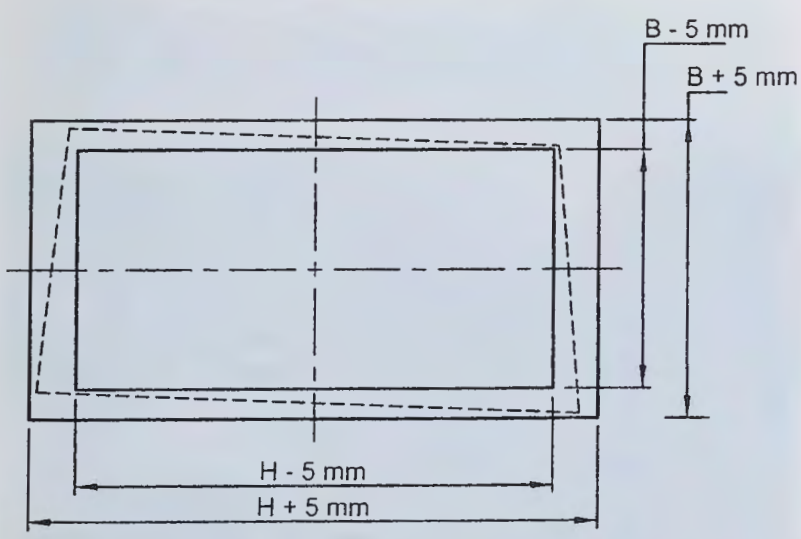

FIG. 4 DETERMINATION OF LENGTH, WIDTH AND SQUARENESS FOR STOCK/STANDARD SIZES

4.7.7 *As-Cut Finished Size*

The nominal dimension for width and length being given, the finished pane or as-cut finished size shall not be greater than the prescribed rectangle from the nominal dimension increased by the tolerance 't' or smaller than the prescribed rectangle reduced by the tolerance 't'. The sides of the prescribed rectangles are parallel to one another and these shall have a common centre in accordance with Fig. 5. The limits of the squareness are also mentioned. Tolerances are given in Table 6.

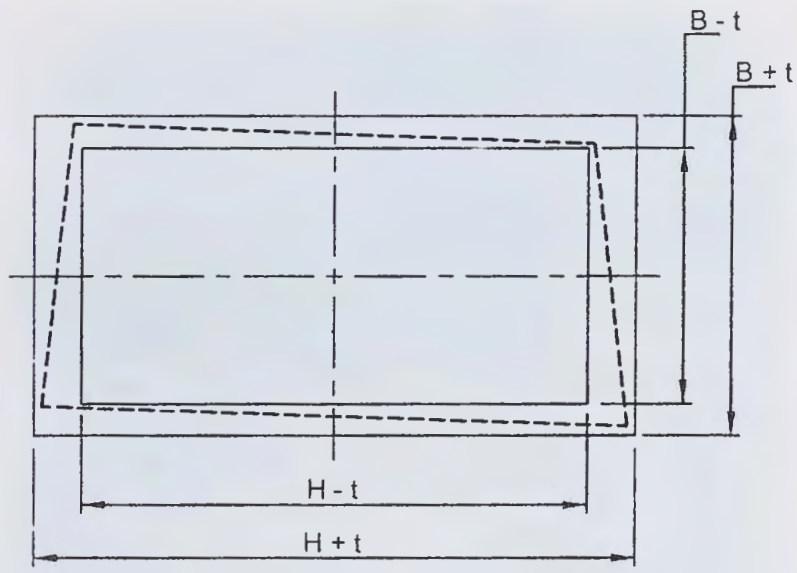

FIG. 5 TOLERANCE (t) FOR WIDTH (B) AND LENGTH (H)

Table 6 Tolerance on Width (B) and Length (H)

(*Clause* 4.7.7)

Sl No.	Nominal Dimension mm	Tolerance 't'	
		Nominal Glass Thickness $d \leq 8$ mm	Nominal Glass Thickness $d > 8$ mm
(1)	(2)	(3)	(4)
i)	≤ 2 000	± 2.5	± 3.0
ii)	2 000 < B or H ≤ 3 000	± 3.0	± 4.0
iii)	> 3 000	± 4.0	± 4.0

NOTE — While the above tolerances are generally applicable, with the advancements in manufacturing, the following suggested tolerance may be suitably decided between the concerned parties:

a) For glass of thickness up to 8 mm, tolerance shall be 1 mm per linear metre.

b) For glass of thickness above 8 mm and up to 16 mm, tolerance shall be 1.5 mm per linear metre.

c) For glass of thickness above 16 mm, tolerance shall be 2 mm per linear metre.

d) However, upper limit of tolerance shall be:

1) ± 2.0 mm (for glass thickness ≤ 8 mm),

2) ± 3.0 mm (for glass thickness ≤ 16mm), and

3) ± 5.0 mm (for glass thickness > 16 mm).

5 ENERGY AND LIGHT

5.1 Energy and Thermal Properties of Glass

5.1.1 *General*

The energy and thermal properties of glass is defined by light transmission, internal and external reflection, solar heat gain coefficient and *U*-value. The performance requirement for glazing shall be suitably selected. Minimum performance requirement is mentioned in the Annex A.

Specific methods of calculating light and energy factors for glass in buildings are covered here and their characteristic data can serve as a basis for light, heating and ventilation calculations of rooms and can permit comparison between different types of glazing. It is applicable to all flat glass material.

5.1.2 *Energy*

5.1.2.1 *General*

Glazed areas in buildings should be designed so that account is taken of the overall energy balance in relation to the effects on the thermal comfort of occupants and the total annual energy implications of solar gain and energy loss.

These should be examined separately, since factors affecting one aspect of performance might have no effect on the other. Energy gain is due to transmission of solar radiant energy through the glass into the building. Solar energy is all at relatively short wavelengths and is controlled by using the glass to absorb or reflect the energy. Energy loss is due to the transfer of energy by conduction, convection and long wavelength radiation and can be influenced by a number of factors, for example incorporating air cavities, including gases of low thermal conductivity and/or low emissivity glass.

5.1.2.2 *Thermal comfort*

Energy transmission through glazing can significantly influence occupier comfort by raising or lowering room air temperatures. For example hot sunny weather can give rise to excessive energy gains; and energy losses can occur through the glazing during cold weather or at night. Thermal comfort can also be influenced by direct radiation through the glazing and/or by radiation exchange between the glazing and the occupants.

5.1.2.3 *Solar energy gain*

Factors that can influence the amount of solar gain through the glazing include,

a) orientation;

b) glazed area;

c) shading devices, both internal and external; and

d) properties of the glazing.

5.1.2.4 *Total solar energy transmittance*

5.1.2.4.1 Total solar energy transmittance is the proportion of solar radiation at normal incidence transferred through the glazing. It is composed of the direct transmittance (short wave component) and the part of the solar absorptance dissipated inwards by long wave radiation and convection (long wave component).

The total solar energy transmission properties of solar control glazing can be described by their shading coefficients. The shading coefficient is derived by comparing the properties of the solar control glazing with a clear float glass having a total solar energy transmittance of 0.87 (that is clear glass between 3 mm and 4 mm thick).

NOTE — Total solar energy transmittance is also known as '*g*' value.

5.1.2.4.2 *Solar control glass*

Solar control glass can be manufactured in several forms. The function of solar control glass is to reduce the total solar energy transmittance, which usually leads to a decrease in the transmission of the visible part of the solar spectrum. However, some tints and coatings are able to attenuate preferentially non-visible solar radiation, leaving the transmission of the greater proportion of the visible radiation largely unchanged.

The application of ceramic frit-fired into the surface of the glass can also be used to modify the energy and light transmission of the glass. The effect can be varied across a pane depending on the screen print pattern. Manufacturers should be consulted for specific details.

Solar control glass can be used in single glazed or double glazed unit depending upon the site requirements. The relationship between light transmission and total solar energy transmission is expressed as the light/energy ratio.

There is no optimum light/energy ratio. The selection of an appropriate product depends on the requirements of the building. Solar gain may be relatively high — for making use of passive solar gains, or low — to reduce air conditioning loads. Light transmission will depend on the extent to which daylight is used to obviate artificial lighting.

Some solar control glasses can be toughened or heat strengthened and gives a means of raising the design stress and ensuring safety from thermal fracture.The following are the common varieties.

NOTE — Some manufacturers use this as a descriptive code, quoting a light transmission figure followed by a total solar energy transmission figure.

a) *Body tinted glass (for increased absorption)* — Solar control properties and colour vary with the thickness of the glass. When used in insulating glass units, body tinted glass should be positioned as the outer pane because the energy due to the absorbed radiation is more easily dissipated to the outside.

b) *Reflective coated glass* — It uses the principle of increasing the direct reflection to maximize solar energy attenuation. In comparison with clear glass, its absorption of solar energy is also increased. An informative annex on test requirements is given at Annex B.

The advantages of such glass types are:

1) Greater performance range than body tinted glass;
2) Higher performances (greater solar energy attenuation);
3) Light/energy ratios nearer to the theoretical limit; and
4) A range of colour appearances in transmission and reflection.

The coatings may be placed on to body-tinted glass to extend the range of performances.

NOTES

1 Compared with a float glass surface, these reflective coatings (owing to their composition) exhibit lower levels of emissivity which improves their *U*-value.

2 Performance data in comparison to clear glass can be had from manufacturers.

c) *Laminated glass* — It is commonly manufactured with clear glass and clear interlayers, but solar control properties can be incorporated into laminated glass by including either solar control glass or tinted interlayers or both.

Laminated glass with clear interlayers and solar control glass exhibits similar properties to the solar control glass from which it is made.

Laminated glass with a tinted interlayer acts in a similar manner to body tinted glass, by absorbing the solar radiation, but with a different range of colours and performances.

NOTE — Performance data in comparison to clear glass can be had from manufacturers. Performances of a typical range of laminated glass products with clear glass and tinted interlayers can be had from manufacturers.

d) *Insulating glass units* — These are used primarily for improved thermal transmittance (*U*-value) (*see* **5.1.3**), and can also improve the total solar energy transmittance. This improvement is a result of the incorporation of a second pane of glass together with the hermetically sealed air space. The second glass pane can be of any glass type. The main glasses used as the inner pane are clear glass, hard coat low emissivity glass or soft coat low emissivity glass.

NOTES

1 Soft coat low emissivity glass can be used as the hermetically sealed airspace protects the coating.

2 Performances of a typical range of insulating glass units with clear float inner pane or with hard/soft coat low emissivity glass inner pane can be had from manufacturers.

5.1.2.4.3 *Solar control plastics glazing sheet materials*

Various coloured plastics glazing sheet materials having ability to reduce the transmission of solar radiation can be used in consultation with the manufacturers.

5.1.2.4.4 *Blinds and louvres*

The use of blinds or louvres in windows affects the window shading coefficient. This depends upon the solar optical properties of the glazing and the material of the blind, on the coefficients of energy transfer at the window surfaces, on the geometry and location of the blind, and the angular position of the sun. Manufacturers' advice may be consulted for use of these materials.

5.1.3 *Energy Loss*

5.1.3.1 *General*

Energy loss is quantified by the thermal transmittance or *U*-value.

Glass and thin plastics glazing sheet materials readily conduct energy and so are poor insulators. To improve resistance to energy loss, insulating glass units or coupled glazing should be used, since the air cavities provide extra thermal resistance.

Increasing the thickness of the glass or plastics glazing sheet material makes little difference to the *U*-value of the glazing.

5.1.3.2 *Methods for improving thermal insulation*

5.1.3.2.1 *Use of low emissivity coatings*

Low emissivity (low-E) coatings have surface emissivities of less than 0.2. The use of such a coating on glass improves the thermal insulation. They are most efficient when used on the cavity surfaces of insulating glass units. Certain types of low-E glasses such as silver based are used in double glazed units only, as the silver oxide coating will get oxidized if used in single glazed.

5.1.3.2.2 *Increasing the width of the air space*

Enhanced thermal insulation can be achieved by increasing the width of the airspace. However, there is a convection of the gas in the cavity.

5.1.3.2.3 *Using gases of lower thermal conductivity*

Replacing the air in the cavity with, for example, argon/krypton, can improve the thermal insulation.

5.1.3.2.4 *Inhibiting convection within the air space*

Filling the cavity with cellular material reduces convection and makes the cavity a more efficient insulator. However, this usually results in loss of vision, since the materials are, at best, translucent.

5.1.3.2.5 *Evacuation of the air space*

In theory, a vacuum shall eliminate energy transfer by conduction and convection. However, a vacuum puts high demands on the glass from the external air pressure

NOTE — Evacuation of the air space is currently considered to be technically impractical.

5.1.3.2.6 *Evaluation of type of spacer used in double glazed unit*

Thermal performance of the glazing system for conduction can be improved by changing the material of the spacer especially when other options have been exhausted.

5.1.4 *Typical U-Values of Glass Products*

Tables 7, 8 and 9 give typical *U*-values.

Table 7 Thermal Transmittance (*U*-Value) of Glass Products: Single Glazing

(*Clause* 5.1.4)

Sl No. (1)	Glass Thickness mm (2)	*U*-Value W/m²K (3)
i)	4	5.8
ii)	6	5.7
iii)	10	5.6
iv)	12	5.5

5.1.5 *Thermal Safety of Glass*

Thermal safety of glass should be assessed considering the amount of radiation incident on the surface and the thermal capabilities of the glass. For example, the solar radiation intensity on the glass surface should be determined along with the air temperature range applicable to the location of the building. These measurements, together with the energy transfer coefficients and the glass absorption allow determination of the appropriate basic temperature difference between the central area of the glass and its edge. The difference is related to the thermal stress and then modified for the type of glazing system, taking account of extraneous effects resulting from curtains, blinds, back-up walls, proximity to heaters, etc, to derive a stress of actual service conditions.

NOTES

1 High air temperatures, low rates of air movement, and the insulation provided by curtains, blinds, back-up walls and multiple glazing tend to reduce the loss of energy and uphold the centre temperature. Low temperatures at the edges are maintained by conduction from the glass through the frame to a cold building structure with a large thermal capacity.

Table 8 Thermal Transmittance (*U*-Value) of Glass Products: Insulating Glass Units

(*Clause* 5.1.4)

Sl No. (1)	Clear glass Thickness and Type mm (2)	Cavity Width mm (3)	*U*-Value W/m²K Air (4)	*U*-Value W/m²K Argon (5)
i)	4 + 4	6	3.3	3.1
		12	2.9	2.7
		16	2.7	2.6
		20	2.8	2.6
ii)	4 + 4 Low E (ε_d = 0.15)	6	2.7	2.3
		12	1.9	1.6
		16	1.7	1.5
		20	1.7	1.5
iii)	4 + 4 Low E (ε_d = 0.04)	6	2.5	2.0
		12	1.6	1.3
		16	1.4	1.2
		20	1.4	1.2
iv)	4 + 4 + 4	6	2.4	2.1
		12	1.9	1.8
		16	1.8	1.7
		20	1.8	1.7
v)	4 Low E (ε_d = 0.15) + 4 + 4 Low E (ε_d = 0.15)	6	1.7	1.4
		12	1.7	1.0
		16	1.0	0.8
		20	0.9	0.8
vi)	4 Low E (ε_d = 0.04) + 4 + 4 Low E (ε_d = 0.04)	6	1.6	1.2
		12	1.0	0.7
		16	0.8	0.6
		20	0.7	0.6

NOTES

1 *U*-values for argon gas-filled cavity based on 90 percent argon/10 percent air.

2 ε_d is the declared (normal) emissivity.

Table 9 Thermal Transmittance (*U*-Value) of Glass Products: Coupled Glazing

(*Clause* 5.1.4)

Sl No. (1)	Clear Glass Thickness and Type mm (2)	Separation mm (3)	*U*-Value W/m²K (4)
i)	4 + 4	25	2.8
		75	2.8
ii)	4 + 4 Low E	25	1.7
		75	1.9

NOTE — ε_d is the declared (normal) emissivity.

2 Advice may be sought from the manufacturer of glass as to the methods for assessing the thermal safety of the glass.

The resultant service stress should then be compared with the design stress for the glass. If on comparison, the service stress is less than or equal to the design stress, the glass and glazing system may be accepted as thermally safe provided, that the edges of the glass are of adequate quality.

NOTE — Where the application of a solar control film is being considered to existing glazing, advice should be sought from the manufacturer on the effect of any additional thermal stress likely to be induced in the glass.

The normal mode of thermal breakage of glass is by the action of tensile stress located in and parallel to an edge, and so the breaking stress of the glass is mainly dependent on the extent and position of flaws in the edges. The condition of the glass edge is therefore extremely important.

Solar control glasses should not be nipped to size and any panes with shelled or vented edges should not be accepted for glazing in orientations subject to direct sunlight. Although a wheel-cut edge is the most satisfactory, laminated glasses with worked edges may be used.

Where clean-cut edges are not permitted, arrises should be created by a wet process, working parallel to the edge and not across the thickness, and the design implications of such an action should be examined.

Where solar control glasses are to be used in sliding doors and windows there is always the possibility that, when opened during sunny periods, the overlapping will function as double glazing with little ventilation in the air space, and it is this condition that should be assumed in assessing the thermal safety of glass.

Thermal safety assessment is based on the behaviour of glass in good condition and properly glazed. Even if the glass is shown to be thermally safe, this depends on close adherence to the recommend glazing procedures. All necessary precautions should be taken to see that only glass with edges of an acceptable condition is used. The glass should be stored and handled so that no contact with hard bodies can damage the edges and each pane or insulating glass unit should be carefully examined immediately before glazing.

5.1.6 *Energy Conservation*

Good window design can, by reducing reliance on artificial lighting, can be one of the largest single means of saving energy and should be carefully considered.

Account should be taken of shape of the room, window orientation, occupancy patterns and task, together with the relationship of windows to surrounding buildings and other obstruction. As with task lighting, possible solar overheating might result and similar precautions should be taken.

5.1.7 *Light Transmission Properties of Window*

Light transmission is defined as the fraction of visible light at normal incidence transmitted through the glazing. For properties of plastic glazing sheet materials, manufacturers may be consulted.

Dirt on glazing reduces the light transmission, often by an appreciable extent before becoming noticeable. To ensure day lighting levels are adequate, an allowance for the reduced light transmission should be made in day lighting calculation by introducing a 'dirt factor' between 0.7 and 1.0. Regular cleaning of glass and plastic glazing sheet materials therefore call their importance.

5.1.8 *Glare*

5.1.8.1 *General*

Glare results from excessive contrast of illumination, or from an excess of illumination in the field of view. Reaction to it is subjective. When correctly designed, natural lighting should not be a glare problem.

NOTE — Contrasts in excess of 10 : 1 in illumination in different parts of the field of view might give rise to glare in some form.

5.1.8.2 *Disability glare*

Reducing the light transmission of glazing from 87 percent to 60 percent produces a just perceptible reduction in disability glare caused by direct sunlight. Even when the light transmission of the glazing is as low as 10 percent some 10 000 lux can still be experienced and glare shall almost certainly occur.

Glare can be reduced by some form of mechanical shading, for example a canopy, an overhanging floor, a balcony or a louvre system. Alternatively, internal screening can be provided by louvres or blinds.

NOTE — Any fixed shading system reduces the amount of natural light entering the building throughout the year, irrespective of whether there is a glare problem at any particular time.

It may also be possible to re-orientate the glazing to avoid entry of direct solar radiation. Alternatively, the interior layout can be suitably designed to eliminate glare.

5.1.8.3 *Discomfort glare*

Glazing products with light transmission lower than 50 percent can ameliorate discomfort glare. These products decrease the sky luminance components but permanently reduce the admission of daylight. Alternatively, shading devices, internal or external, movable or fixed, may be used.

Other methods of reducing the problems of glare should be considered, including,

a) installation of windows in more than one wall to raise the general background illumination and, in so doing, to reduce the contrast between a window and its surrounding surfaces;
b) use of light coloured matt finishes for the window frames and the surrounding surfaces;
c) splayed reveals, to assist in reducing the contrast between the window and its surroundings;
d) use of slender glazing bars and transoms of high reflectance; and
e) lowering window sills to allow increased illumination to enter, which increases the adaptation level and reduces the likelihood of discomfort glare.

5.1.9 *Diffusion and Obscuration*

The nature of some glazing products (for example, patterned or acid etched glass) can cause the direct incident solar beam to be scattered diffusely. Hence the window might assume an uncomfortable high brightness and become a discomfort glare source in its own right. Diffusing glazing used within the normal field of view should be used with caution.

5.1.10 *Fading*

Most materials can fade when subjected to either daylight (particularly direct sunlight) or artificial light. Fading is a complex phenomenon involving many chemical reactions, initiated or accelerated by light of different wavelengths. Generally, the better quality dyes and pigments fade relatively slowly and react only to the shorter wavelengths (ultraviolet and the blue end of the visible spectrum). Other materials can fade quickly and might do so under light of much longer wavelengths. It is the combination of wavelength, available light and transmission which determines glass selection to minimise fading, not simply the UV transmission.

5.1.11 *Determination of Characteristic Parameters*

5.1.11.1 *General*

The characteristic parameters are determined for quasi-parallel, almost normal radiation incidence.

5.1.11.2 *Test setup*

The samples shall be irradiated by a beam whose axis is at an angle not exceeding 10° from the normal to the surface. The angle between the axis and any ray of the illuminating beam shall not exceed 5°.

The characteristic parameters are as follows:

a) Spectral transmittance $\tau(\lambda)$, the spectral external reflectance $\rho_o(\lambda)$ and the spectral internal reflectance $\rho_i(\lambda)$ in the wavelength range of 300 nm to 2 500 nm;
b) Light transmittance τ_v, the external light reflectance $\rho_{v,0}$ and the internal light reflectance $\rho_{v,i}$ for illuminant D65;
c) Solar direct transmittance τ_e and the solar direct reflectance ρ_e;
d) Total solar energy transmittance (solar heat gain co-efficient SHGC) *g*; and
e) UV-transmittance τ_{UV};

When calculating the characteristic parameters of multiple glazing, the spectral data of each glass component is to be used instead of integrating data of the complete unit.

5.1.11.3 *Performance requirements of optical measurements*

Optical measurements in transmission and reflection require special care to achieve accuracy in transmittance and reflectance of about ±0.01.

The wavelength calibration and the photometric linearity of commercial spectrophotometers shall be checked periodically using reference materials obtained from metrological laboratories.

The wavelength calibration shall be performed by measuring glass plates which feature relatively sharp absorption bands at specified wavelengths; the photometric linearity shall be checked using grey filters with a certified transmittance.

For reflectance measurements, reference materials having reflection behaviour (that is, reflectance level and ratio of diffuse and direct reflectance).

Thick samples (that is, laminated glass or insulating units) can modify the optical path of the instrument's beam as compared to the path in air and therefore the sample beam hits an area of the detector having a different responsivity.

A similar source of inaccuracy occurs in case of samples with significant wedge angles which deflect the transmitted (and reflected) beams. It is recommended to check the reproducibility by repeating the measurement after rotating the sample.

Additionally, in the case of reflectance measurements, glass sheets cause a lateral shear of the beam reflected by the second surface, causing reflectance losses (whose extent is particularly evident in the case of thick and/or wedged samples). This source of inaccuracy shall be taken into account particularly in the case of reflectance measurements through the uncoated side. In order to quantify and correct systematic errors, it is

recommended to use calibrated reflectance standards with a thickness similar to the unknown sample.

In the case of diffusing samples (or samples with a non-negligible diffusing component or wedged samples), transmittance and reflectance measurements shall be performed using integrating spheres whose openings are sufficiently large to collect the entire diffusely transmitted or reflected beam. The sphere diameter shall be adequate and the internal surface adequately coated with a highly diffusing reflectance material, so that the internal area can provide the necessary multiple reflections. Reference materials with characteristics similar to the unknown sample as specified above shall be used. If the transmittance or reflectance curve recorded by the spectrometer exhibits a high level of noise for some wavelengths, the values to be considered for those wavelengths should be obtained after a smoothing of the noise.

5.1.11.4 *Light transmittance*

Light transmittance is the measure of the amount of light passing through the glazing. The visible light lies between the wavelength 380 nm and 780 nm. The light transmission of the glazing depends on the substrate type and coating layer done on the base glass.

The light transmittance τ_v of glazing shall be calculated using the following formula:

$$\tau_v = \frac{\sum_{\lambda=380\,\text{nm}}^{780\,\text{nm}} \tau(\lambda) D_\lambda V(\lambda) \Delta\lambda}{\sum_{\lambda=380\,\text{nm}}^{780\,\text{nm}} D_\lambda V(\lambda) \Delta\lambda}$$

where

D_λ = relative spectral distribution of illuminant D65;

$\tau(\lambda)$ = spectral transmittance of glazing;

$V(\lambda)$ = spectral luminous efficiency for photopic vision defining the standard observer for photometry; and

$\Delta\lambda$ = wavelength interval.

Table 10 indicates the values for $D_\lambda V(\lambda)\Delta\lambda$ for wavelength intervals of 10 nm. The table has been drawn up in such a way that $\sum D_\lambda V(\lambda)\Delta\lambda = 1$.

In the case of multiple glazing, the spectral transmittance $\tau(\lambda)$ shall be obtained by calculation from the spectral characteristics of the individual components. Alternatively, measurements on non-diffusing multiple units may be performed using an integrating sphere. This may be achieved after reducing the interspaces under conditions that allow the collection of the whole transmitted beam.

The calculation of the spectral transmittance $\tau(\lambda)$ shall be performed using methods such as algebraic manipulation. Any algorithm that can be shown to yield consistently the correct solution is acceptable.

For the calculation of $\tau(\lambda)$ as well as for the calculation of spectral reflectance the following symbols for the spectral transmittance and spectral reflectance of the individual components are used:

$\tau_1(\lambda)$ = spectral transmittance of the outer (first) pane;

$\tau_2(\lambda)$ = spectral transmittance of the second pane;

$\tau_n(\lambda)$ = the spectral transmittance of the nth (inner) pane (for example, for triple glazing $n = 3$);

$\rho_1(\lambda)$ = spectral reflectance of the outer (first) pane measured in the direction of incident radiation;

$\rho'_1(\lambda)$ = spectral reflectance of the outer (first) pane measured in the opposite direction of incident radiation;

$\rho_2(\lambda)$ = spectral reflectance of the second pane measured in the direction of incident radiation;

$\rho'_2(\lambda)$ = spectral reflectance of the second pane measured in the opposite direction of incident radiation;

$\rho_n(\lambda)$ = spectral reflectance of the nth (inner) pane measured in the direction of incident radiation;

$\rho'_n(\lambda)$ = spectral reflectance of the nth (inner) pane measured in the opposite direction of incident radiation.

For the spectral transmittance $\tau(\lambda)$ as a function of the spectral characteristics of the individual components of the unit, the following formulae are obtained:

a) For double glazing, and

b) For triple glazing.

For multiple glazing with more than three components, relationships similar to above expressions are found to calculate $\tau(\lambda)$ of such glazing from the spectral characteristics of the individual components.

As an example for calculating $\tau(\lambda)$ according to the procedures of this Section, a glazing composed of five components may be treated as follows:

1) First consider the first three components as triple glazing and calculate the spectral characteristics of this combination;

2) Next, run the same procedure for the next two components as double glazing; and

3) Then calculate $\tau(\lambda)$ for the five component glazing, considering it as double glazing

consisting of the preceding triple and double glazing.

The light transmission requirement for the glazing should be selected in accordance with relevant Indian standards.

Table 10 Normalized Relative Spectral Distribution $D_\lambda V(\lambda)\Delta\lambda$

(*Clause* 5.1.11.4)

Sl No.	λ nm	$D_\lambda V(\lambda)\Delta\lambda \times 10^2$
(1)	(2)	(3)
i)	380	0
ii)	390	0.000 5
iii)	400	0.003 0
iv)	410	0.010 3
v)	420	0.035 2
vi)	430	0.094 8
vii)	440	0.227 4
viii)	450	0.419 2
ix)	460	0.666 3
x)	470	0.985 0
xi)	480	1.518 9
xii)	490	2.133 6
xiii)	500	3.349 1
xiv)	510	5.139 3
xv)	520	7.052 3
xvi)	530	8.799 0
xvii)	540	9.442 7
xviii)	550	9.807 7
xix)	560	9.430 6
xx)	570	8.689 1
xxi)	580	7.899 4
xxii)	590	6.330 6
xxiii)	600	5.354 2
xxiv)	610	4.249 1
xxv)	620	3.150 2
xxvi)	630	2.081 2
xxvii)	640	1.381 0
xxviii)	650	0.807 0
xxix)	660	0.461 2
xxx)	670	0.248 5
xxxi)	680	0.125 5
xxxii)	690	0.053 6
xxxiii)	700	0.027 6
xxxiv)	710	0.014 6
xxxv)	720	0.005 7
xxxvi)	730	0.003 5
xxxvii)	740	0.002 1
xxxviii)	750	0.000 8
xxxix)	760	0.000 1
xxxx)	770	0.000 0
xxxxi)	780	0.000 0

NOTE — Normalized relative spectral distribution D_λ of illuminant D65 multiplied by the spectral luminous efficiency $V(\lambda)$ and by the wavelength interval $\Delta\lambda$. The values in this table are calculated according to the trapezoidal rule.

5.2 Light Reflectance

2.1 *External Light Reflectance of Glazing*

External light reflectance corresponds to the amount of sunlight reflected by the external glass surface. The amount of light reflection depends on the type of base glass (substrate tint) and the position of coating on the glass surface.

The external light reflectance of glazing $\rho_{v,o}$ shall be calculated using the following formula:

$$\rho_{v,o} = \frac{\sum_{\lambda=380\,\text{nm}}^{780\,\text{nm}} \rho_o(\lambda) D_\lambda V(\lambda)\Delta\lambda}{\sum_{\lambda=380\,\text{nm}}^{780\,\text{nm}} D_\lambda V(\lambda)\Delta\lambda}$$

where

$\rho_o(\lambda)$ = spectral external reflectance of glazing, and D_λ, $V(\lambda)$, $\Delta\lambda$ and the integration procedure are defined in **5.1.11.4**.

For multiple glazing, the calculation of the spectral external reflectance $\rho_o(\lambda)$ shall be performed using the same methods as given in **5.1.11.4** for the calculation of the spectral transmittance $\tau(\lambda)$.

For the spectral external reflectance $\rho_o(\lambda)$ as a function of the spectral characteristics of the individual components of the unit, the following formulae are applied:

a) *For double glazing*:

$$\rho_o(\lambda) = \rho_1(\lambda) + \frac{\tau_1^2(\lambda)\rho_2(\lambda)}{1-\rho_1'(\lambda)\rho_2(\lambda)}$$

b) *For triple glazing:*

$$\rho_o(\lambda) = \rho_1(\lambda) + \frac{\tau_1^2(\lambda)\rho_2(\lambda)\left[1-\rho_2'(\lambda)\rho_3(\lambda)\right] + \tau_1^2(\lambda)\tau_2^2(\lambda)\rho_3(\lambda)}{\left[1-\rho_1'(\lambda)\rho_2(\lambda)\right]\cdot\left[1-\rho_2'(\lambda)\rho_3(\lambda)\right] - \tau_2^2(\lambda)\rho_1'(\lambda)\rho_3(\lambda)}$$

For multiple glazing with more than three components, relationships similar to above equations are found to calculate $\rho_o(\lambda)$ of such glazing from the spectral characteristics of the individual components.

As an example for calculating $\rho_o(\lambda)$, a glazing composed of five components may be treated in the same way as described in **5.1.11.4**.

5.2.2 *Internal Light Reflectance of Glazing*

Internal light reflectance corresponds to the amount of light reflected by the inner glass surface. The amount of light reflection depends on the type of base glass (substrate tint) and the position of coating on the glass surface.

The internal light reflectance of glazing $\rho_{v,i}$ shall be calculated using the following formula:

$$\rho_{v,i} = \frac{\sum_{\lambda=380\,nm}^{780\,nm} \rho_i(\lambda) D_\lambda V(\lambda)\Delta\lambda}{\sum_{\lambda=380\,nm}^{780\,nm} D_\lambda V(\lambda)\Delta\lambda}$$

where

$\rho_i(\lambda)$ = spectral internal reflectance of glazing, and

$D\lambda$, $V(\lambda)$, $\Delta\lambda$ and the integration procedure are as defined in light transmittance.

For multiple glazing, the calculation of the spectral internal reflectance $\rho_i(\lambda)$ shall be performed using the same methods as given in **5.1.11.4** for the calculation of the spectral transmittance $\tau(\lambda)$.

For the spectral internal reflectance $\rho_i(\lambda)$ as a function of the spectral characteristics of the individual components of the unit, the following formulae are applied.

a) *For double glazing*:

$$\rho_i(\lambda) = \rho_2'(\lambda) + \frac{\tau_2^2(\lambda)\rho_1'(\lambda)}{1-\rho_1'(\lambda)\rho_2(\lambda)}$$

b) *For triple glazing:*

$$\rho_i(\lambda) = \rho_3'(\lambda) + \frac{\tau_3^2(\lambda)\rho_2'(\lambda)\left[1-\rho_2(\lambda)\rho_1'(\lambda)\right] + \tau_3^2(\lambda)\tau_2^2(\lambda)\rho_1'(\lambda)}{\left[1-\rho_3(\lambda)\rho_2'(\lambda)\right]\cdot\left[1-\rho_2(\lambda)\rho_1'(\lambda)\right] - \tau_2^2(\lambda)\rho_3(\lambda)\rho_1'(\lambda)}$$

For multiple glazing with more than three components, relationships similar to above expressions are found to calculate $\rho_i(\lambda)$ of such glazing from the spectral characteristics of the individual components.

5.3 Total Solar Energy Transmittance (Solar Heat Gain Coefficient)

5.3.1 Solar heat gain coefficient (SHGC)/solar factor (SF) is the measure of amount of heat transfer from outside to inside by direct transmission (Short Wave Radiation) and internal remitted radiation (Long Wave Radiation). The SHGC (*see* Fig. 6) or SF depends on the tint of the substrate and also the type of coating that is done on the base glass. The amount of solar energy gained through glass is between 0 and 1. Multiplying the SHGC or SF by 100 gives the percentage of solar energy allowed into the building.

The total solar energy transmittance g is the sum of the solar direct transmittance τ_e and the secondary heat transfer factor q_i towards the inside, the latter resulting from heat transfer by convection and long-wave IR-radiation of that part of the incident solar radiation which has been absorbed by the glazing and is expressed as:

$$g = \tau_e + q_i$$

5.3.2 *Division of Incident Solar Radiation Flux*

The incident solar radiant flux per unit area φ_e is divided into the following three parts (*see* Fig. 7):

a) Transmitted part, $\tau_e\varphi_e$;

b) Reflected part, $\rho_e\varphi_e$; and

c) Absorbed part, $\alpha_e\varphi_e$;

where

τ_e = solar direct transmittance,

ρ_e = solar direct reflectance, and

α_e = solar direct absorptances.

The relationship between the three characteristics is:

$$\tau_e + \rho_e + \alpha_e = 1$$

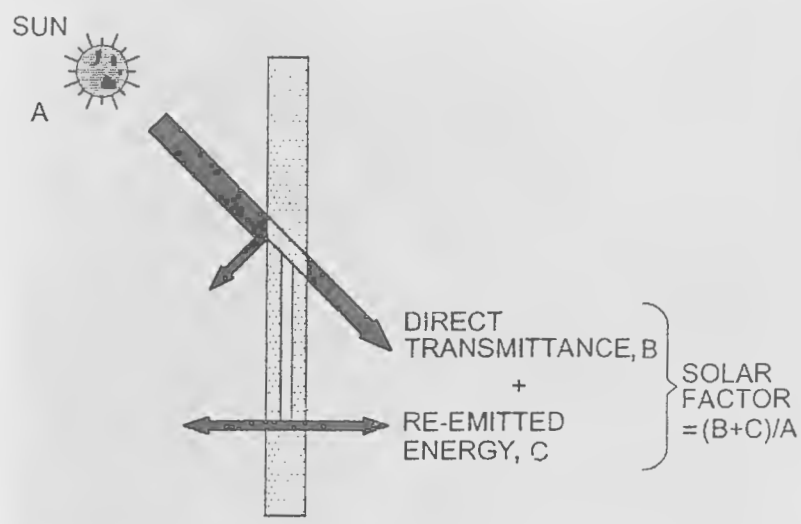

FIG. 6 SOLAR HEAT GAIN COEFFICIENT

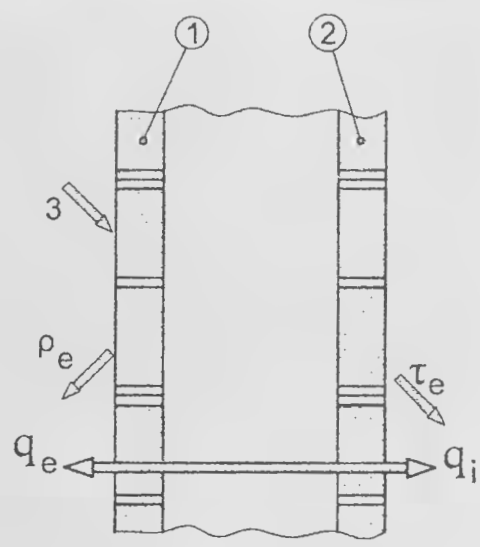

KEY
1 OUTER PANE
2 SECOND INNER PANE
3 UNIT INCIDENT RADIANT FLUX
ρ_e = 0.38; q_e = 0.17;
τ_e = 0.41; q_i = 0.04; therefore g = 0.45

FIG. 7 COMPONENTS OF INCIDENT SOLAR RADIANT FLUX

The absorbed part $\alpha_e \varphi_e$ is subsequently divided into two parts $q_i \varphi_e$ and $q_e \varphi_e$, which are energy transferred to the inside and outside, respectively:

$$\alpha_e = q_i + q_e$$

where

q_i = secondary heat transfer factor of the glazing towards the inside; and

q_e = secondary heat transfer factor of the glazing towards the outside.

5.3.3 *Solar Direct Transmittance*

The solar direct transmittance τ_e of glazing shall be calculated using the following formula:

$$\tau_e = \frac{\sum_{\lambda=300\,\text{nm}}^{2\,500\,\text{nm}} \tau(\lambda) S_\lambda \, \Delta\lambda}{\sum_{\lambda=300\,\text{nm}}^{2\,500\,\text{nm}} S_\lambda \Delta\lambda}$$

where

S_λ = relative spectral distribution of the solar radiation;

$\tau(\lambda)$ = spectral transmittance of the glazing; and

$\Delta\lambda$ = integration procedure are the same as in **5.1.11.4** except that the data points shall be chosen at the wavelengths given in Table 11.

5.3.4 *Solar Direct Reflectance*

The solar direct reflectance ρ_e of the glazing shall be calculated using the following formula:

$$\rho_e = \frac{\sum_{\lambda=300\,\text{nm}}^{2\,500\,\text{nm}} \rho_o(\lambda) S_\lambda \, \Delta\lambda}{\sum_{\lambda=300\,\text{nm}}^{2\,500\,\text{nm}} S_\lambda \Delta\lambda}$$

where

S_λ = relative spectral distribution of the solar radiation (*see* **5.3.3**);

$\rho_o(\lambda)$ = spectral external reflectance of the glazing; and

$\Delta\lambda$ = integration procedure are the same as in light transmittance except that the data points shall be chosen at the wavelengths given in Table 11.

In the case of multiple glazing, the spectral external reflectance $\rho_o(\lambda)$ is calculated in accordance with **5.2.1**.

Table 11 Normalized Relative Spectral Distribution of Global Solar Radiation

(*Clauses* 5.3.3, 5.3.4, 5.3.6.3 *and* 5.3.6.4)

l nm (1)	$S_\lambda \Delta\lambda$ (2)
300	0
305	0.000 057
310	0.000 236
315	0.000 554
320	0.000 916
325	0.001 309
330	0.001 914
335	0.002 018
340	0.002 189
345	0.000 260
350	0.002 445
355	0.002 555
360	0.002 683
365	0.003 020
370	0.003 359
375	0.003 509
380	0.003 600
385	0.003 529
390	0.003 551
395	0.004 294
400	0.007 812
410	0.011 638
420	0.011 877
430	0.011 347
440	0.013 245
450	0.015 343
460	0.016 166
470	0.016 178
480	0.016 402
490	0.015 794
500	0.015 801
510	0.015 973
520	0.015 357
530	0.015 857
540	0.015 827
550	0.015 844
560	0.015 590
570	0.015 255
580	0.014 745
590	0.014 330
600	0.014 663
610	0.015 030
620	0.014 859
630	0.014 622
640	0.014 526
650	0.014 445
660	0.014 313
670	0.014 023
680	0.012 838
690	0.011 788
700	0.012 453
710	0.012 798
720	0.010 589
730	0.011 233
740	0.012 175
750	0.012 181
760	0.009 515
770	0.010 479
780	0.011 381
790	0.011 262
800	0.026 718

Table 11 — (*Concluded*)

(1)	(2)
850	0.048 240
900	0.040 297
950	0.021 384
1 000	0.036 097
1 050	0.034 110
1 100	0.018 861
1 150	0.013 228
1 200	0.022 551
1 250	0.023 376
1 300	0.017 756
1 350	0.003 743
1 400	0.000 741
1 450	0.003 792
1 500	0.009 693
1 550	0.013 693
1 600	0.012 203
1 650	0.010 615
1 700	0.007 255
1 750	0.007 183
1 800	0.002 157
1 850	0.000 395
1 900	0.000 082
1 950	0.001 087
2 000	0.003 024
2 050	0.003 988
2 100	0.004 229
2 150	0.004 142
2 200	0.003 690
2 250	0.003 592
2 300	0.003 436
2 350	0.003 163
2 400	0.002 233
2 450	0.001 202
2 500	0.000 475

NOTE — The values in this table are calculated according to the trapezoidal rule.

5.3.5 *Solar Direct Absorptance*

The solar direct absorptance α_e shall be calculated from the following formula:

$$\tau_e + \rho_e + \alpha_e = 1$$

5.3.6 *Secondary Heat Transfer Factor Towards the Inside*

5.3.6.1 *Boundary conditions*

For the calculation of the secondary heat transfer factor towards the inside, q_i, the heat transfer coefficients of the glazing towards the outside, h_e, and towards the inside, h_i, are needed. These values mainly depend on the position of the glazing, wind velocity, inside and outside temperatures and, furthermore, on the temperature of the two external glazing surfaces.

As the purpose of this Section is to provide basic information on the performance of glazing, the following conventional conditions have been stated for simplicity:

a) Position of the glazing: vertical;

b) Outside surface: wind velocity approximately 4 m/s; corrected emissivity 0.837;

c) Inside surface: natural convection; emissivity optional; and

d) Air spaces are unventilated.

Under these conventional, average conditions, standard values for h_e and h_i are obtained:

$$h_e = 23 \text{ W/m}^2\text{K}$$

$$h_i = \left(3.6 + \frac{4.4\varepsilon_i}{0.837}\right) \text{W/m}^2K$$

where

ε_i = corrected emissivity of the inside surface [for soda lime glass, ε_i = 0.837 and h_i = 8 W/m²K].

If other boundary conditions are used to meet special requirements they shall be stated in the test report.

Values for ε_i lower than 0.837 (due to surface coatings with higher reflectance in the far infrared) should only to be taken into account if condensation on the coated surface can be excluded.

5.3.6.2 *Single glazing*

The secondary heat transfer factor towards the inside, q_i, of single glazing shall be calculated using the following formula:

$$q_i = \alpha_e \frac{h_i}{h_e + h_i}$$

where

α_e = solar direct absorptance obtained from the in accordance with **5.3.2**, and

h_e, h_i = heat transfer coefficients towards the outside and inside, respectively, in accordance with **7.6.1.**

5.3.6.3 *Double glazing*

The secondary heat transfer factor towards the inside, q_i, of double glazing shall be calculated using the following formula:

$$q_i = \frac{\left(\frac{\alpha_{e1} + \alpha_{e2}}{h_e} + \frac{\alpha_{e2}}{\Lambda}\right)}{\left(\frac{1}{h_i} + \frac{1}{h_e} + \frac{1}{\Lambda}\right)}$$

where

α_{e1} = solar direct absorptance of the outer (first) pane within the double glazing;

α_{e2} = solar direct absorptance of the second pane within the double glazing;

Λ = thermal conductance between the outer surface and the innermost surface of the double glazing (*see* Fig. 8), in Watt Per square metre per Kelvin (W/m²K); and

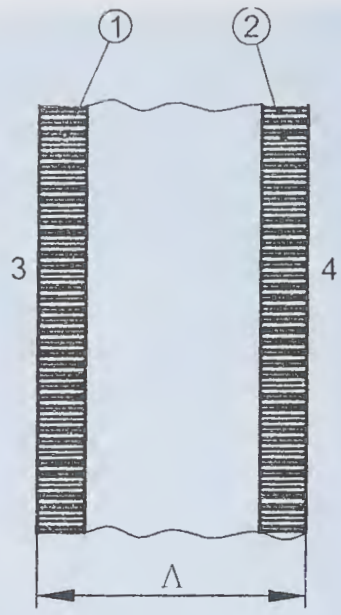

KEY
1 PANE 1
2 PANE 2
3 OUTSIDE
4 INSIDE

FIG. 8 ILLUSTRATION OF THE MEANING OF THERMAL CONDUCTANCE, Λ

h_e, h_i = heat transfer coefficients towards the outside and the inside, respectively in accordance with **5.3.6.1**.

Characteristics α_{e1} and α_{e2} are calculated as follows:

$$\alpha_{e1} = \frac{\sum_{\lambda=300\,nm}^{2\,500\,nm} \left\{ \alpha_1(\lambda) + \frac{\alpha_1'(\lambda)\tau_1(\lambda)\rho_2(\lambda)}{1-\rho_1'(\lambda)\rho_2(\lambda)} \right\} S_\lambda \Delta\lambda}{\sum_{\lambda=300\,nm}^{2\,500\,nm} S_\lambda \Delta\lambda}$$

$$\alpha_{e2} = \frac{\sum_{\lambda=300\,nm}^{2\,500\,nm} \left\{ \frac{\alpha_2(\lambda)\tau_1(\lambda)}{1-\rho_1'(\lambda)\rho_2(\lambda)} \right\} S_\lambda \Delta\lambda}{\sum_{\lambda=300\,nm}^{2\,500\,nm} S_\lambda \Delta\lambda}$$

where

$\tau_1(\lambda)$, $\tau_2(\lambda)$, $\rho_1(\lambda)$, $\rho'_1(\lambda)$ and $\rho_2(\lambda)$ are as defined in light transmittance.

$\alpha_1(\lambda)$ = spectral direct absorptance of the outer pane, measured in the direction of the incident radiation, given by the relationship:

$\alpha_1(\lambda) = 1 - \tau_1(\lambda) - \rho_1(\lambda)$

$\alpha'_1(\lambda)$ = spectral direct absorptance of the outer pane, measured in the opposite direction to the incident radiation, given by the relationship:

$\alpha_1'(\lambda) = 1 - \tau_1(\lambda) - \rho'_1(\lambda)$

$\alpha_2(\lambda)$ = spectral direct absorptance of the second pane, measured in the direction of the incident radiation, given by the relationship:

$\alpha_2(\lambda) = 1 - \tau_2(\lambda) - \rho_2(\lambda)$

$\Delta\lambda$ and the integration procedure are the same as in **5.1.11.4** except that the data points shall be chosen at the wavelengths given in Table 11.

The thermal conductance Λ shall be determined for a temperature difference of $\Delta T = 15°C$ across the sample and a mean temperature of the sample of 10°C, or by measuring methods using the standard guarded hot plate method, or the standard heat flow metre method.

If another temperature difference ΔT across the sample and/or another mean temperature of the sample is used for the determination of the thermal conductance Λ to meet special requirements, this shall be stated in the test report.

5.3.6.4 *Multiple glazing with n > 2 components*

The secondary heat transfer factor towards the inside, q_i, of a multiple glazing with more than two components shall be calculated using the following formula:

$$q_i = \frac{\dfrac{\alpha_{e1}+\alpha_{e2}+\alpha_{e3}+\ldots+\alpha_{en}}{h_e} + \dfrac{\alpha_{e2}+\alpha_{e3}+\ldots+\alpha_{en}}{\Lambda_{12}} + \dfrac{\alpha_{e3}+\ldots+\alpha_{en}}{\Lambda_{23}} + \ldots + \dfrac{\alpha_{en}}{\Lambda_{(n-1)n}}}{\dfrac{1}{h_i} + \dfrac{1}{h_e} + \dfrac{1}{\Lambda_{12}} + \dfrac{1}{\Lambda_{23}} + \ldots + \dfrac{1}{\Lambda_{(n-1)n}}}$$

where

α_{e1} = solar direct absorptance of the outer (first) pane within the *n*-fold glazing;

α_{e2} = solar direct absorptance of the second pane within the *n*-fold glazing;

α_{en} = solar direct absorptance of the nth (inner) pane of the *n*-fold glazing;

h_e, h_i = heat transfer coefficients towards the outside and towards the inside, respectively in accordance with **5.3.6.1**;

Λ_{12} = thermal conductance between the outer surface of the outer (first) pane and the centre of the second pane (*see* Fig. 9);

$\Lambda_{(n-1)n}$ = thermal conductance between the centre of the $(n-1)^{th}$ pane and the outer surface of the n^{th}(inner) pane (*see* Fig. 9); and

Λ_{23} = thermal conductance between the centre of the second pane and the centre of the third pane (*see* Fig. 9);

The thermal conductances Λ_{12}, Λ_{23}……$\Lambda_{(n-1)n}$ shall be determined by iteration technique. The calculation of the direct solar absorptances α_{e1}, $\alpha_{e2,\ldots}\alpha_{en}$ shall be performed using the methods given in **5.3.6.3**.

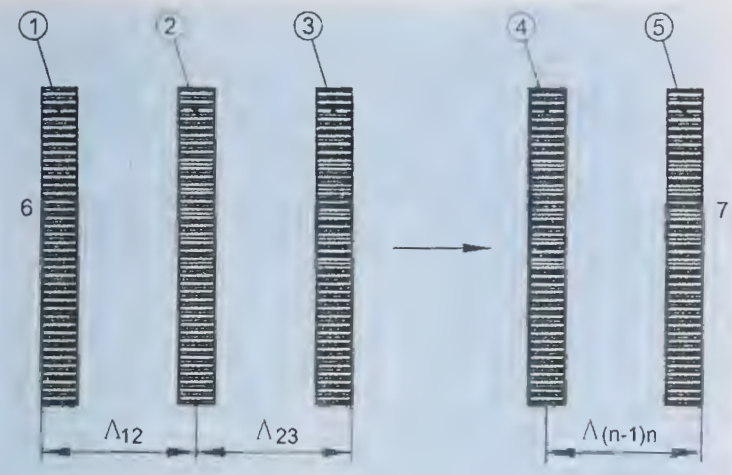

KEY

1 PANE 1	5 PANE n
2 PANE 2	6 OUTSIDE
3 PANE 3	7 INSIDE
4 PANE (n - 1)	

NOTE — For triple glazing, pane 3 corresponds to pane n.

FIG. 9 ILLUSTRATION OF THE MEANING OF THE THERMAL CONDUCTANCES $\Lambda_{12}, \Lambda_{23} \ldots \Lambda_{(n-1)n}$

As an example for the calculation of the direct solar absorptances the following procedure is given which consist of the following (n–1) steps for a glazing consisting of n components:

a) *First step* — Calculate the spectral characteristics of a unit consisting of (n–1) components 2, 3.....n according to what has been prescribed in **5.1.11.4** and **6.1**. Then combine this unit with the first (outer) pane as a double glazing.

b) *Second step* — Calculate the spectral characteristics of a unit consisting of the (n–2) components 3, ..., n and furthermore, those of a double glazing consisting of pane 1 and pane 2. These units are then combined as a double glazing. The sum $\alpha_{e1} + \alpha_{e2}$ is then obtained. This procedure is continued up to the last (n–1)th step.

c) *(n–1)th step* — Combine the (n–1) panes 1,2,... (n–1) and determine the spectral characteristics of this unit. This unit is then combined with the nth (inner) pane as a double glazing. From the second equation in **5.3.6.3**, the sum $\alpha_{e1}, \alpha_{e2} \ldots \alpha_{e(n-1)}$ is obtained, that is with the known values $\alpha_{e1}, \alpha_{e2}, \ldots \alpha_{e(n-2)}$ from the previous steps $\alpha_{e(n-1)}$ is determined. α_{en} is obtained according to the expression of α_{e2} in **5.3.6.3**.

In the case of triple glazing for the solar absorptances α_{e1}, α_{e2} and α_{e3} as a function of the spectral characteristics of the individual components of the unit, the following formulae are obtained:

$$\alpha_{e1} = \frac{\sum_{\lambda=300\,\text{nm}}^{2\,500\,\text{nm}} \left\{ \alpha_1(\lambda) + \frac{\tau_1(\lambda)\alpha_1'(\lambda)\rho_2(\lambda)\left[1-\rho_2'(\lambda)\rho_3(\lambda)\right] + \tau_1(\lambda)\tau_2^2(\lambda)\alpha_1'(\lambda)\rho_3(\lambda)}{\left[1-\rho_1'(\lambda)\rho_2(\lambda)\right]\cdot\left[1-\rho_2'(\lambda)\rho_3(\lambda)\right] - \tau_2^2(\lambda)\rho_1'(\lambda)\rho_3(\lambda)} \right\} S_\lambda \Delta\lambda}{\sum_{\lambda=300\,\text{nm}}^{2\,500\,\text{nm}} S_\lambda \Delta\lambda}$$

$$\alpha_{e2} = \frac{\sum_{\lambda=300\,\text{nm}}^{2\,500\,\text{nm}} \left\{ \frac{\tau_1(\lambda)\alpha_2(\lambda)\left[1-\rho_2'(\lambda)\rho_3(\lambda)\right] + \tau_1(\lambda)\tau_2(\lambda)\alpha_2'(\lambda)\rho_3(\lambda)}{\left[1-\rho_1'(\lambda)\rho_2(\lambda)\right]\cdot\left[1-\rho_2'(\lambda)\rho_3(\lambda)\right] - \tau_2^2(\lambda)\rho_1'(\lambda)\rho_3(\lambda)} \right\} S_\lambda \Delta\lambda}{\sum_{\lambda=300\,\text{nm}}^{2\,500\,\text{nm}} S_\lambda \Delta\lambda}$$

$$\alpha_{e3} = \frac{\sum_{\lambda=300\,\text{nm}}^{2\,500\,\text{nm}} \left\{ \frac{\tau_1(\lambda)\tau_2(\lambda)\alpha_3(\lambda)}{\left[1-\rho_1'(\lambda)\rho_2(\lambda)\right]\cdot\left[1-\rho_2'(\lambda)\rho_3(\lambda)\right] - \tau_2^2(\lambda)\rho_1'(\lambda)\rho_3(\lambda)} \right\} S_\lambda \Delta\lambda}{\sum_{\lambda=300\,\text{nm}}^{2\,500\,\text{nm}} S_\lambda \Delta\lambda}$$

where

$\tau_1(\lambda)$, $\tau_2(\lambda)$, $\tau_3(\lambda)$, $\rho_1(\lambda)$, $\rho'_1(\lambda)$, $\rho_2(\lambda)$, $\rho'_2(\lambda)$, $\rho_3(\lambda)$ are as defined in light transmittance;

$\alpha_1(\lambda)$, $\alpha'_1(\lambda)$ and $\alpha_2(\lambda)$ are as defined in **5.3.6.3** double glazing;

$\alpha'_2(\lambda)$ = spectral direct absorptance of the second pane, measured in the opposite direction to the incident radiation, given by the relationship:

$\alpha'_2(\lambda) = 1 - \tau_2(\lambda) - \rho'_2(\lambda)$

$\alpha_3(\lambda)$ = spectral direct absorptance of the third pane, measured in the direction of the incident radiation, given by the relationship:

$\alpha_3(\lambda) = 1 - \tau_3(\lambda) - \rho_3(\lambda)$

$\Delta\lambda$ and the integration procedure are the same as in **5.1.11.4** except that the data points shall be chosen at the wavelengths given in Table 5.

For a glazing with more than three components, the formulae for the solar absorptances $\alpha_{e1}, \alpha_{e2}, \ldots, \alpha_{en}$ as a function of the individual components.

5.3.6.5 *Mean radiant temperature (MRT)*

MRT can be calculated by various methods, among which measuring with globe thermometer is the most common and is given by:

$$MRT = \sqrt[4]{T_g^{\,4} + \frac{h_{cg}}{\varepsilon_g \sigma}(T_g - T_a)^4}$$

where

T_a = air temperature, in Kelvin;

T_g = black globe temperature, in Kelvin;

ε_g = emissivity of black globe;

σ = Stefan-Boltzmann constant; and

h_{cg} = convective heat transfer coefficient of the black globe.

5.4 Total Solar Energy Transmission

The total solar energy transmitted into the room per unit area of glazing φ_{ei} is given by the relationship:

$$\varphi_{ei} = \varphi_e g$$

where

φ_e = incident solar radiation flux per unit area;

g = total solar energy transmittance of the glazing; and

The values of φ_e can be obtained from appropriate tables in meteorological literature.

NOTE — The SHGC/SF requirement for the glazing should be selected based on the prescriptive requirements are mentioned in Annex A.

5.4.1 *Additional Heat Transfer*

If the room temperature T_i differs from the outside temperature T_o, an additional heat transfer occurs in addition to φ_{ei}. This additional heat flow q_z can be calculated as follows:

$$q_z = U(T_o - T_i)$$

where U is the U-value (thermal transmittance) of glazing.

5.5 UV-Transmittance

The UV-transmittance of glazing is the fraction of the incident solar radiation transmitted by the glazing in the 300 nm to 380 nm range (UV-B range from 300 nm to 315 nm and UV-A range from 315 nm to 380 nm). The UV-transmittance τ_{UV} is calculated as follows:

$$\tau_{UV} = \frac{\sum_{\lambda=300\,\text{nm}}^{380\,\text{nm}} \tau(\lambda) S_\lambda \Delta\lambda}{\sum_{\lambda=300\,\text{nm}}^{380\,\text{nm}} S_\lambda \Delta\lambda}$$

where

S_λ = relative spectral distribution of UV radiation;

$\tau(\lambda)$ = spectral transmittance of the glazing; and

$\Delta\lambda$ and the integration procedure are the same as **5.1.11.4** except that the data points shall be chosen at the wavelength given in Table 12.

This average extends over the defined UV-portion of the solar spectrum. It may not be correlated with solar radiation damage of materials and skin.

5.6 *U*-Value

Heat transmittance through a surface by conduction, convection, and radiation is expressed by its U-value. U-value is the amount of heat transferred that is lost or gained due to a temperature differential of 1 K through 1 m². The rate of heat transfer (U-value) is minimised by the use of double glazing, using gas inside cavity or by using low-E glass for inside pane of double glazed unit.

The U-value requirement for the glazing system should be selected in accordance with the Table 13 and Annex A.

Table 12 Normalized Relative Spectral Distribution of Global Solar Radiation

(*Clause* 5.5)

Sl No. (1)	λ nm (2)	$S_\lambda \Delta\lambda$ (3)
i)	300	0
ii)	305	0.001 859
iii)	310	0.007 665
iv)	315	0.017 961
v)	320	0.029 732
vi)	325	0.042 466
vii)	330	0.062 108
viii)	335	0.065 462
ix)	340	0.071 020
x)	345	0.073 326
xi)	350	0.079 330
xii)	355	0.082 894
xiii)	360	0.087 039
xiv)	365	0.097 963
xv)	370	0.108 987
xvi)	375	0.113 837
xvii)	380	0.058 351

NOTE — The values in this table are calculated according to the trapezoidal rule.

Table 13 Thermal Performance of Different Glass Shading Devices

(*Clause* 5.6)

Sl No. (1)	Name of the Shading Device (2)	Transmittance, *U*-Value (3)	Shade Factor (4)
i)	Plain glass sheet (3.0 mm thick)	5.23	1.00
ii)	Plain glass + Wire mesh outside	5.00	0.65
iii)	Painted glass:		
	a) White paint	5.22	0.35
	b) Yellow paint	5.22	0.37
	c) Green paint	5.22	0.40
iv)	Heat absorbing glass	4.65	0.45
v)	Plain glass sheet + Venetian blind inside:	3.14	
	a) Light colour		0.35
	b) Dark colour		0.40
vi)	Plain glass sheet which is,	5.23	
	a) 100 percent shaded		0.14
	b) 75 percent shaded		0.34
	c) 60 percent shaded		0.56

NOTE — Indicative values, actual value of the system to be measured using either approved simulation software or testing laboratory

6 FIRE AND LOADING

6.1 Determination of Appropriate Glass Thickness

6.1.1 *General*

This Section gives provisions to determine the minimum glass thickness to be used to resist the ultimate limit state design wind pressures. However, the location of the glass within the building require additional considerations, such as safety with respect to human which may impose either a minimum glass thickness above the basic calculation of this part or a provision for a specific glass type or both.

In addition to the provisions herein, the design requirements such as wind loads determined in accordance with good practice [6-8(7)] and the serviceability deflection requirement limit given in this Section shall have to be complied.

The provisions under **6** are applicable provided the following parameters are satisfied:

a) Ultimate limit state wind pressure shall not be greater than 10 kPa.

b) For laminated glass, the two sheets are of equal thickness and the interlayer material is either polyvinyl butyral or an equivalent type of interlayer with a modulus of elasticity of about 24 MPa and a Poisson's ratio of 0.50 at 20°C.

c) Design flexural tensile strength of glass depends upon the design strength obtained after applying a factor of safety of 2.5. The minimum design strength of normal glass for thickness up to 6 mm is 16.7 N/mm^2 and for thickness above 6 mm is 15.2 N/mm^2.

6.1.2 *Design Considerations*

The following design considerations shall be considered in determination of appropriate thickness of glass:

a) Maximum area of glass panel is restricted to 15 m^2.

b) Maximum span of window is restricted to 4 m.

c) Aspect ratio of the glass panel should be greater than 1.5. If it is less than 1.5, next higher available thickness should be selected.

d) Factor of safety used is 2.5 considering the variability in strength of glass.

e) Applicable to normal, reflective, laminated, tempered and insulating glass.

f) Applicable to rectangular panels properly secured.

g) Design minimum thickness of laminated glass will be the maximum value of thickness in accordance with the Table 5.

h) Any recognized method of analysis may be used for design, in consultation with the manufacturer.

6.1.3 *Empirical Relationship*

Empirical relation between the wind pressure, area of the glass panel and the required glass thickness can be used:

$P_{net} \cdot A = 200T^k$ (for $T \leq 6$ mm)

$P_{net} \cdot A = 200T^k + 1\,900$ (for $T > 6$ mm)

where

P_{net} = Net design wind pressure as per **6.1.4**, in N/m^2;

A = Area of glass panel, in m^2;

T = Standard nominal thickness (SNT) of glass from Table 14, in mm; and

k = Constant from the Table 14.

Table 14 Value of k for the Corresponding Standard Nominal Thickness of Float Glass

(*Clause* 6.1.3)

T, mm	3	4	5	6	8	10	12	15	19	25
k	1.683	1.732	1.753	1.765	1.57	1.578	1.583	1.579	1.569	1.569

6.1.3.1 *Glass supported on two opposite sides*

a) Normal and laminated glass panels supported on two opposite sides can be designed using following empirical relations:

1) For $T \leq 6$ mm :

$$b = \frac{4.39\,T}{\sqrt{\left(\frac{P_{net}}{P_f}\right)}}$$

2) For $T > 6$ mm :

$$b = \frac{4.22\,T}{\sqrt{\left(\frac{P_{net}}{P_f}\right)}}$$

b) Tempered/toughened panel supported on two opposite sides can be designed using following empirical relations:

1) For $T \leq 6$ mm :

$$b = \frac{3.268\,8\,T}{\sqrt{\left(\frac{P_{net}}{P_f}\right)}}$$

2) For $T > 6$ mm :

$$b = \frac{2.906\,9\,T}{\sqrt{\left(\frac{P_{net}}{P_f}\right)}}$$

where

b = span, in m; and

P_f = strength factor as in Table 15.

For insulated glass, thickness of only one glass pane shall be considered. If the glass panes are of different thickness, the minimum of the two thicknesses shall be considered.

For laminated glass, the thickness of PVB has not been considered. The value to be used is;

T = Standard nominal thickness – Thickness of PVB.

For non-linear analysis, specialist literature may be consulted.

6.1.4 *Determination of Design Wind Pressure*

Net design wind pressure (P_{net}) is an important parameter governing the thickness of glass to be used in the window panels. It depends on factors as given below:

a) Location of the building (wind zone);
b) Construction patterns around buildings (terrain category);
c) Topography of site;
d) Building plan and height, etc.

Net design wind pressure (P_{net}), may be defined using the following equation:

$$P_{net} = p_z . C_p$$

where

C_p = net pressure coefficient as per good practice [6-8(7)]; and

p_z = design wind pressure as per good practice [6-8(7)], in N/m^2.

= $0.6\,V_z^2$

V_z = $V_b . k_1 . k_2 . k_3 . k_4$

where

V_b = basic wind speed based on Location [as per Fig. 1 of good practice [6-8(7)];

k_1 = risk co-efficient factor;

k_2 = terrain factor;

k_3 = topography factor;

k_4 = importance factor for the cyclonic region and

V_z = design wind speed, in m/s.

6.1.4.1 *Laminated/tempered/insulating glass*

To determine the thickness of laminated/tempered/insulating glass, the design wind pressure P_{net} is modified by dividing it with the strength or pressure factor P_f, dependent on the type of glass. The values of the P_f are given in Table 15.

Using the modified values of P_{net}, the thickness of other glass types can be obtained in accordance with **6.1.3**.

Table 15 Strength Factor, P_f

[*Clause* 6.1.3.1(b)]

Sl No. (1)	Glass Type (2)	P_f (3)
i)	Normal (Annealed)	1.00
ii)	Laminated	0.80
iii)	Tempered	2.50
iv)	Insulated	1.50
v)	Heat strengthened	1.60
vi)	Wired glass	0.50

6.1.5 *Aspect Ratio (AR_{max})*

The design of the thickness using empirical relation in accordance with **6.1.3** shall be valid up to a limiting aspect ratio AR_{max}. The value of AR_{max} for different thickness (T) of glass is given in Table 16.

Table 16 Thickness and Corresponding AR_{max} Values

(*Clause* 6.1.5)

T, mm	3	4	5	6	8	10	12	15	19	25
AR_{max}	7.3	6.8	6.5	6.3	5.9	4.9	4.3	3.8	3.3	2.9

6.1.6 *Seismic Design*

6.1.6.1 *Seismic load (EQ)*

The design for seismic forces shall be performed in steps to establish upper and lower bound force and movement response parameters. In addition, the response of the structure sensitive to certain parameters such as the damping and the stiffness of the support points may be evaluated.

The principal design criteria for the seismic design are,

a) Structure will remain elastic during the design seismic event.

b) 'Hangers' will stiffen the cantilever 'tree' structure.

c) 'Hangers' will not go slack.

6.1.6.2 *Non-structural elements*

Depending on response sensitivity, non-structural elements can be classified as deformation sensitive, acceleration sensitive, or both deformation and acceleration sensitive. Table 17 classifies non-structural elements according to their response sensitivity

Table 17 Response Sensitivity of Architectural Component

(*Clause* 6.1.6.2)

Sl No.	Component	Sensitivity	
		Acceleration Sensitive	Deformation Sensitive
(1)	(2)	(3)	(4)
i)	Exterior skin:		
	a) Adhered veneer	S	P
	b) Anchored veneer	S	P
	c) Glass blocks	S	P
	d) Prefabricated panel	S	P
	e) Glazing system	S	P
ii)	Partitions:		
	a) Heavy	S	P
	b) Light	S	P
iii)	Interior veneers:		
	a) Stone, including marble	S	P
	b) Ceramic tile	S	P
iv)	Parapets and appendages	P	—
v)	Canopies and marquees	P	—
vi)	Stairs	P	S

NOTES

1 P = Primary response.

2 S = Secondary response.

6.1.6.3 *Design seismic force*

Design seismic force, F_p, on the non-structural element shall be calculated using the following expression:

$$F_p = \frac{Z}{2}\left(1+\frac{x}{h}\right)\frac{a_p}{R_p} I_p W_p \geq 0.10\ W_p$$

where

Z = zone factor {as per Table 2 of good practice [6-8(8)]};

x = height of point of attachment of the non-structural element above the foundation;

h = height of the structure;

a_p = component amplification factor given in Table 18;

R_p = component response factor of the non-structural modification factor given in Table 18;

I_p = importance element (to be taken as 1.5); and

W_p = weight of the non-structural element.

Table 18 Modification Factors

(*Clause* 6.1.6.3)

Sl No.	Architectural Component or Element	a_p (*see* Note)	R_p
(1)	(2)	(3)	(4)
i)	Interior non-structural walls and partitions:		
	a) Plain (unreinforced) masonry walls	1.0	1.5
	b) All other walls and partitions	1.0	2.5
ii)	Cantilever elements (braced to structural frame above its centre of mass):		
	a) Parapets	1.0	1.5
	b) Chimneys and stacks	1.0	2.5
	c) Exterior non-structural walls	1.0	2.5
iii)	Exterior non-structural wall elements and connections:		
	a) Wall element	1.0	2.5
	b) Body of wall panel connection	1.0	2.5
	c) Fasteners of the connecting system	1.25	1.0
iv)	Veneer:		
	a) High deformability elements and attachments	1.0	2.5
	b) Low deformability elements and attachments	1.0	1.5

NOTE — A lower value of a_p is permitted provided a detailed dynamic analysis is performed which justifies a lower value. The value of a_p shall not be less than 1.0. The value of a_p = 1.0 is for equipment generally regarded as rigid and rigidly attached. The value of a_p = 2.5 is for flexible components or flexibly attached components.

6.1.6.4 *Seismic relative displacement*

a) For two connection points on the same structure '*A*', one at a height h_x, and other at a height h_y, seismic relative displacement shall be determined as:

$$D_p = \delta_{xA} - \delta_{yA}$$

D_p is not required to be taken as greater than

$$R\left(h_x - h_y\right)\frac{\Delta_{aA}}{h_{sx}}$$

where

δ_{xA} = deflection at building level x of structure A due to design seismic load determined by elastic analysis, and multiplied by response reduction factor R of the building as per Table 9 of good practice [6-8(8)];

δ_{yA} = deflection at building level y of structure A due to design seismic load determined by elastic analysis, and multiplied by response reduction factor R of the building as per Table 9 of good practice [6-8(8)];

h_x = height of level x to which upper connection point is attached;

h_y = height of level y to which lower connection point is attached;

Δ_{aA} = allowable storey drift for structure A calculated as per **7.11.1.1** of good practice [6-8(8)]; and

h_{sx} = storey height below level x.

b) For two connection points on separate structures A and B, or separate structural systems, one at height, h_x, and the other at a height, h_y , D_p shall be determined as:

$$D_p = |\delta_{xA}| + |\delta_{yB}|$$

D_p is not required to be taken as greater than

$$R\left(h_x \frac{\Delta_{aA}}{h_{sx}} + h_y \frac{\Delta_{aB}}{h_{sx}}\right)$$

where

δ_{yB} = deflection at building level y of structure *B* due to design seismic load determined by elastic analysis, and multiplied by response reduction factor, R, of the building as per Table 9 of good practice [6-8(8)]

Δ_{aB} = allowable storey drift for structure *B* calculated as per **7.11.1.1** of good practice [6-8(8)]

6.1.7 *Imposed Loads*

The uniform distributed load and point load is to be considered based on application and is to be selected in accordance with good practice [6-8(9)]. Appropriate uniform distributed load (UDL) and concentrated load are selected in accordance to good practice [6-8(9)] based on nature of building (for example, residential, institutional, industrial building, etc) and nature of activity under each building type.

6.1.8 *Load Contribution*

6.1.8.1 *Wind load*

The wind load is the effect of wind pressure which is dependent on the location, building height, topography and ground roughness factor. The wind speed is taken from good practice [6-8(7)] for the geographic location.

6.1.8.2 *Dead load*

In case of inclined sloped glazing, the dead weight of the glazing should be considered. In case of component of sloped glazing, the following corresponding component of the total glazing may be used:

a) Point load shall be applied as a uniformly distributed load over a circular area of 0.01 m^2.

b) For a glazed panel supported on all edges, the point loading shall be applied at the centre.

c) For free glazing edges, the point load shall be applied adjacent to the centre of the free edge.

d) Ultimate limit state design wind pressure shall not be greater than 1.2 kPa. For greater design wind pressures, the glass shall be separately designed to withstand wind loading in accordance with **6.1.4**.

6.1.9 *Reference Chart Relating Wind Load, Maximum Allowable Area for a Thickness of Glass with respect to Terrain Category*

Table 19 to Table 27 provides relation between design wind pressure and maximum allowable area for a thickness of glass with respect to specific terrain category. User may select the type of glass depending on the support conditions.

Specialist literature may be consulted for use of non-linear analysis and the like for laminated glass.

The deflection at the centre of glass pane can be calculated using the formula in accordance to Annex C.

Typical model calculation to calculate thickness and determine wind load and deflection at the centre of the glazing is given at Annex D.

6.2 Installation

6.2.1 Basic installation requirements and materials used for glass are given hereunder.

NOTES

1 The provisions under this item do not include the use of other methods or systems for glazing, provided the alternate method or system can be demonstrated to satisfy the requirements for correctly supporting the glass within the frame, or glazing system.

2 Patent and other proprietary systems are not described/ covered here.

3 Installation technique for frameless glazing system is not covered here.

Table 19 Maximum Areas for Annealed Glass Fixed on All Four Sides, m²

(*Clause* 6.1.9)

Design Wind Pressure N/m²	Nominal Thickness of Annealed Glass, *T* mm								
	3	4	5	6	8	10	12	15	19
(1)	(2)	(3)	(4)	(5)	(6)	(7)	(8)	(9)	(10)
500	2.13	3.86	6.03	8.63	13.06	15.00	15.00	15.00	15.00
550	1.93	3.51	5.48	7.85	11.88	15.00	15.00	15.00	15.00
600	1.77	3.21	5.02	7.19	10.89	14.61	15.00	15.00	15.00
650	1.64	2.97	4.64	6.64	10.05	13.48	15.00	15.00	15.00
700	1.52	2.75	4.31	6.17	9.33	12.52	15.00	15.00	15.00
750	1.42	2.57	4.02	5.76	8.71	11.69	14.75	15.00	15.00
800	1.33	2.41	3.77	5.40	8.16	10.96	13.83	15.00	15.00
850	1.25	2.27	3.55	5.08	7.68	10.31	13.01	15.00	15.00
900	1.18	2.14	3.35	4.80	7.26	9.74	12.29	15.00	15.00
950	1.12	2.03	3.17	4.54	6.88	9.23	11.64	15.00	15.00
1 000	1.06	1.93	3.01	4.32	6.53	8.76	11.06	15.00	15.00
1 050	1.01	1.84	2.87	4.11	6.22	8.35	10.53	14.38	15.00
1 100	0.97	1.75	2.74	3.92	5.94	7.97	10.06	13.73	15.00
1 150	0.93	1.68	2.62	3.75	5.68	7.62	9.62	13.13	15.00
1 200	0.89	1.61	2.51	3.60	5.44	7.30	9.22	12.58	15.00
1 250	0.85	1.54	2.41	3.45	5.23	7.01	8.85	12.08	15.00
1 300	0.82	1.48	2.32	3.32	5.02	6.74	8.51	11.61	15.00
1 350	0.79	1.43	2.23	3.20	4.84	6.49	8.19	11.18	14.98
1 400	0.76	1.38	2.15	3.08	4.67	6.26	7.90	10.78	14.44
1 450	0.73	1.33	2.08	2.98	4.50	6.04	7.63	10.41	13.95
1 500	0.71	1.29	2.01	2.88	4.35	5.84	7.37	10.07	13.48
1 550	0.69	1.24	1.94	2.78	4.21	5.65	7.14	9.74	13.05
1 600	0.67	1.21	1.88	2.70	4.08	5.48	6.91	9.44	12.64
1 650	0.64	1.17	1.83	2.62	3.96	5.31	6.70	9.15	12.25
1 700	0.63	1.13	1.77	2.54	3.84	5.16	6.51	8.88	11.89
1 750	0.61	1.10	1.72	2.47	3.73	5.01	6.32	8.63	11.55
1 800	0.59	1.07	1.67	2.40	3.63	4.87	6.14	8.39	11.23
1 850	0.58	1.04	1.63	2.33	3.53	4.74	5.98	8.16	10.93
1 900	0.56	1.01	1.59	2.27	3.44	4.61	5.82	7.95	10.64
1 950	0.55	0.99	1.55	2.21	3.35	4.49	5.67	7.74	10.37
2 000	0.53	0.96	1.51	2.16	3.27	4.38	5.53	7.55	10.11
2 050	0.52	0.94	1.47	2.11	3.19	4.28	5.40	7.36	9.86
2 100	0.51	0.92	1.44	2.06	3.11	4.17	5.27	7.19	9.63
2 150	0.49	0.90	1.40	2.01	3.04	4.08	5.14	7.02	9.40
2 200	0.48	0.88	1.37	1.96	2.97	3.98	5.03	6.86	9.19
2 250	0.47	0.86	1.34	1.92	2.90	3.90	4.92	6.71	8.99
2 300	0.46	0.84	1.31	1.88	2.84	3.81	4.81	6.56	8.79
2 350	0.45	0.82	1.28	1.84	2.78	3.73	4.71	6.42	8.60
2 400	0.44	0.80	1.26	1.80	2.72	3.65	4.61	6.29	8.43
2 450	0.43	0.79	1.23	1.76	2.67	3.58	4.51	6.16	8.25
2 500	0.43	0.77	1.21	1.73	2.61	3.51	4.42	6.04	8.09
2 550	0.42	0.76	1.18	1.69	2.56	3.44	4.34	5.92	7.93
2 600	0.41	0.74	1.16	1.66	2.51	3.37	4.25	5.81	7.78
2 650	0.40	0.73	1.14	1.63	2.46	3.31	4.17	5.70	7.63
2 700	0.39	0.71	1.12	1.60	2.42	3.25	4.10	5.59	7.49
2 750	0.39	0.70	1.10	1.57	2.38	3.19	4.02	5.49	7.35
2 800	0.38	0.69	1.08	1.54	2.33	3.13	3.95	5.39	7.22
2 850	0.37	0.68	1.06	1.51	2.29	3.08	3.88	5.30	7.09
2 900	0.37	0.66	1.04	1.49	2.25	3.02	3.81	5.21	6.97
2 950	0.36	0.65	1.02	1.46	2.21	2.97	3.75	5.12	6.85
3 000	0.35	0.64	1.00	1.44	2.18	2.92	3.69	5.03	6.74
3 050	0.35	0.63	0.99	1.42	2.14	2.87	3.63	4.95	6.63
3 100	0.34	0.62	0.97	1.39	2.11	2.83	3.57	4.87	6.52
3 150	0.34	0.61	0.96	1.37	2.07	2.78	3.51	4.79	6.42
3 200	0.33	0.60	0.94	1.35	2.04	2.74	3.46	4.72	6.32
3 250	0.33	0.59	0.93	1.33	2.01	2.70	3.40	4.65	6.22
3 300	0.32	0.58	0.91	1.31	1.98	2.66	3.35	4.58	6.13
3 350	0.32	0.58	0.90	1.29	1.95	2.62	3.30	4.51	6.04
3 400	0.31	0.57	0.89	1.27	1.92	2.58	3.25	4.44	5.95
3 450	0.31	0.56	0.87	1.25	1.89	2.54	3.21	4.38	5.86

Table 19 — (*Concluded*)

(1)	(2)	(3)	(4)	(5)	(6)	(7)	(8)	(9)	(10)
3 500	0.30	0.55	0.86	1.23	1.87	2.50	3.16	4.31	5.78
3 550	0.30	0.54	0.85	1.22	1.84	2.47	3.12	4.25	5.70
3 600	0.30	0.54	0.84	1.20	1.81	2.43	3.07	4.19	5.62
3 650	0.29	0.53	0.83	1.18	1.79	2.40	3.03	4.14	5.54
3 700	0.29	0.52	0.81	1.17	1.77	2.37	2.99	4.08	5.47
3 750	0.28	0.51	0.80	1.15	1.74	2.34	2.95	4.03	5.39
3 800	0.28	0.51	0.79	1.14	1.72	2.31	2.91	3.97	5.32
3 850	0.28	0.50	0.78	1.12	1.70	2.28	2.87	3.92	5.25
3 900	0.27	0.49	0.77	1.11	1.67	2.25	2.84	3.87	5.18
3 950	0.27	0.49	0.76	1.09	1.65	2.22	2.80	3.82	5.12
4 000	0.27	0.48	0.75	1.08	1.63	2.19	2.77	3.77	5.06
4 050	0.26	0.48	0.74	1.07	1.61	2.16	2.73	3.73	4.99
4 100	0.26	0.47	0.74	1.05	1.59	2.14	2.70	3.68	4.93
4 150	0.26	0.46	0.73	1.04	1.57	2.11	2.67	3.64	4.87
4 200	0.25	0.46	0.72	1.03	1.56	2.09	2.63	3.59	4.81
4 250	0.25	0.45	0.71	1.02	1.54	2.06	2.60	3.55	4.76
4 300	0.25	0.45	0.70	1.00	1.52	2.04	2.57	3.51	4.70
4 350	0.24	0.44	0.69	0.99	1.50	2.01	2.54	3.47	4.65
4 400	0.24	0.44	0.69	0.98	1.48	1.99	2.51	3.43	4.60
4 450	0.24	0.43	0.68	0.97	1.47	1.97	2.49	3.39	4.54
4 500	0.24	0.43	0.67	0.96	1.45	1.95	2.46	3.36	4.49
4 550	0.23	0.42	0.66	0.95	1.44	1.93	2.43	3.32	4.44
4 600	0.23	0.42	0.66	0.94	1.42	1.91	2.40	3.28	4.40
4 650	0.23	0.41	0.65	0.93	1.40	1.88	2.38	3.25	4.35
4 700	0.23	0.41	0.64	0.92	1.39	1.86	2.35	3.21	4.30
4 750	0.22	0.41	0.63	0.91	1.38	1.85	2.33	3.18	4.26
4 800	0.22	0.40	0.63	0.90	1.36	1.83	2.30	3.15	4.21
4 850	0.22	0.40	0.62	0.89	1.35	1.81	2.28	3.11	4.17
4 900	0.22	0.39	0.62	0.88	1.33	1.79	2.26	3.08	4.13
4 950	0.21	0.39	0.61	0.87	1.32	1.77	2.23	3.05	4.08
5 000	0.21	0.39	0.60	0.86	1.31	1.75	2.21	3.02	4.04
Maximum aspect ratio	7.3	6.8	6.5	6.3	5.9	4.9	4.3	3.8	3.3

Table 20 Maximum Areas for Laminated Glass Fixed on All Four Sides, m²

(*Clause* 6.1.9)

Design Wind Pressure N/m²	Nominal Thickness of Laminated Glass, *T* mm					
	5.38	6.38	8.38	10.38	12.38	16.38
(1)	(2)	(3)	(4)	(5)	(6)	(7)
500	4.47	6.28	10.45	14.02	15.00	15.00
550	4.06	5.71	9.50	12.75	15.00	15.00
600	3.72	5.23	8.71	11.69	15.00	15.00
650	3.44	4.83	8.04	10.79	13.93	15.00
700	3.19	4.48	7.46	10.02	12.94	15.00
750	2.98	4.19	6.97	9.35	12.08	15.00
800	2.79	3.92	6.53	8.76	11.32	15.00
850	2.63	3.69	6.15	8.25	10.66	15.00
900	2.48	3.49	5.81	7.79	10.06	14.21
950	2.35	3.30	5.50	7.38	9.53	13.46
1 000	2.23	3.14	5.23	7.01	9.06	12.79
1 050	2.13	2.99	4.98	6.68	8.63	12.18
1 100	2.03	2.85	4.75	6.37	8.23	11.63
1 150	1.94	2.73	4.54	6.10	7.88	11.12
1 200	1.86	2.62	4.35	5.84	7.55	10.66
1 250	1.79	2.51	4.18	5.61	7.25	10.23
1 300	1.72	2.41	4.02	5.39	6.97	9.84
1 350	1.66	2.33	3.87	5.19	6.71	9.47
1 400	1.60	2.24	3.73	5.01	6.47	9.14
1 450	1.54	2.16	3.60	4.84	6.25	8.82
1 500	1.49	2.09	3.48	4.67	6.04	8.53

Table 20 — (*Continued*)

(1)	(2)	(3)	(4)	(5)	(6)	(7)
1 550	1.44	2.03	3.37	4.52	5.84	8.25
1 600	1.40	1.96	3.27	4.38	5.66	7.99
1 650	1.35	1.90	3.17	4.25	5.49	7.75
1 700	1.31	1.85	3.07	4.12	5.33	7.52
1 750	1.28	1.79	2.99	4.01	5.18	7.31
1 800	1.24	1.74	2.90	3.90	5.03	7.11
1 850	1.21	1.70	2.82	3.79	4.90	6.91
1 900	1.18	1.65	2.75	3.69	4.77	6.73
1 950	1.15	1.61	2.68	3.60	4.64	6.56
2 000	1.12	1.57	2.61	3.51	4.53	6.40
2 050	1.09	1.53	2.55	3.42	4.42	6.24
2 100	1.06	1.49	2.49	3.34	4.31	6.09
2 150	1.04	1.46	2.43	3.26	4.21	5.95
2 200	1.02	1.43	2.38	3.19	4.12	5.81
2 250	0.99	1.40	2.32	3.12	4.03	5.68
2 300	0.97	1.36	2.27	3.05	3.94	5.56
2 350	0.95	1.34	2.22	2.98	3.85	5.44
2 400	0.93	1.31	2.18	2.92	3.77	5.33
2 450	0.91	1.28	2.13	2.86	3.70	5.22
2 500	0.89	1.26	2.09	2.80	3.62	5.12
2550	0.88	1.23	2.05	2.75	3.55	5.02
2 600	0.86	1.21	2.01	2.70	3.48	4.92
2 650	0.84	1.18	1.97	2.65	3.42	4.83
2 700	0.83	1.16	1.94	2.60	3.35	4.74
2 750	0.81	1.14	1.90	2.55	3.29	4.65
2 800	0.80	1.12	1.87	2.50	3.23	4.57
2 850	0.78	1.10	1.83	2.46	3.18	4.49
2 900	0.77	1.08	1.80	2.42	3.12	4.41
2 950	0.76	1.06	1.77	2.38	3.07	4.34

Table 20 — (*Continued*)

(1)	(2)	(3)	(4)	(5)	(6)	(7)
3 000	0.74	1.05	1.74	2.34	3.02	4.26
3 050	0.73	1.03	1.71	2.30	2.97	4.19
3 100	0.72	1.01	1.69	2.26	2.92	4.13
3 150	0.71	1.00	1.66	2.23	2.88	4.06
3 200	0.70	0.98	1.63	2.19	2.83	4.00
3 250	0.69	0.97	1.61	2.16	2.79	3.94
3 300	0.68	0.95	1.58	2.12	2.74	3.88
3 350	0.67	0.94	1.56	2.09	2.70	3.82
3 400	0.66	0.92	1.54	2.06	2.66	3.76
3 450	0.65	0.91	1.51	2.03	2.63	3.71
3 500	0.64	0.90	1.49	2.00	2.59	3.65
3 550	0.63	0.88	1.47	1.98	2.55	3.60
3 600	0.62	0.87	1.45	1.95	2.52	3.55
3 650	0.61	0.86	1.43	1.92	2.48	3.50
3 700	0.60	0.85	1.41	1.90	2.45	3.46
3 750	0.60	0.84	1.39	1.87	2.42	3.41
3 800	0.59	0.83	1.38	1.85	2.38	3.37
3 850	0.58	0.82	1.36	1.82	2.35	3.32
3 900	0.57	0.80	1.34	1.80	2.32	3.28
3 950	0.57	0.79	1.32	1.78	2.29	3.24
4 000	0.56	0.78	1.31	1.75	2.26	3.20
4 050	0.55	0.78	1.29	1.73	2.24	3.16

Table 20 — (*Concluded*)

(1)	(2)	(3)	(4)	(5)	(6)	(7)
4 100	0.55	0.77	1.27	1.71	2.21	3.12
4 150	0.54	0.76	1.26	1.69	2.18	3.08
4 200	0.53	0.75	1.24	1.67	2.16	3.05
4 250	0.53	0.74	1.23	1.65	2.13	3.01
4 300	0.52	0.73	1.22	1.63	2.11	2.97
4 350	0.51	0.72	1.20	1.61	2.08	2.94
4 400	0.51	0.71	1.19	1.59	2.06	2.91
4 450	0.50	0.71	1.17	1.58	2.04	2.87
4 500	0.50	0.70	1.16	1.56	2.01	2.84
4 550	0.49	0.69	1.15	1.54	1.99	2.81
4 600	0.49	0.68	1.14	1.52	1.97	2.78
4 650	0.48	0.68	1.12	1.51	1.95	2.75
4 700	0.48	0.67	1.11	1.49	1.93	2.72
4 750	0.47	0.66	1.10	1.48	1.91	2.69
4 800	0.47	0.65	1.09	1.46	1.89	2.66
4 850	0.46	0.65	1.08	1.45	1.87	2.64
4 900	0.46	0.64	1.07	1.43	1.85	2.61
4 950	0.45	0.63	1.06	1.42	1.83	2.58
5 000	0.45	0.63	1.05	1.40	1.81	2.56
Maximum aspect ratio	6.5	6.2	5.7	4.8	4.3	3.6

Table 21 Maximum Areas for Tempered Glass Fixed on All Four Sides, m²

(*Clause* 6.1.9)

Design Wind Pressure N/m²	Nominal Thickness of Tempered Glass, *T* mm								
	3	4	5	6	8	10	12	15	19
(1)	(2)	(3)	(4)	(5)	(6)	(7)	(8)	(9)	(10)
500	5.32	9.64	15.00	15.00	15.00	15.00	15.00	15.00	15.00
550	4.84	8.76	13.70	15.00	15.00	15.00	15.00	15.00	15.00
600	4.43	8.03	12.56	15.00	15.00	15.00	15.00	15.00	15.00
650	4.09	7.42	11.59	15.00	15.00	15.00	15.00	15.00	15.00
700	3.80	6.89	10.77	15.00	15.00	15.00	15.00	15.00	15.00
750	3.55	6.43	10.05	14.39	15.00	15.00	15.00	15.00	15.00
800	3.33	6.03	9.42	13.49	15.00	15.00	15.00	15.00	15.00
850	3.13	5.67	8.87	12.70	15.00	15.00	15.00	15.00	15.00
900	2.96	5.36	8.37	11.99	15.00	15.00	15.00	15.00	15.00
950	2.80	5.07	7.93	11.36	15.00	15.00	15.00	15.00	15.00
1 000	2.66	4.82	7.54	10.79	15.00	15.00	15.00	15.00	15.00
1 050	2.53	4.59	7.18	10.28	15.00	15.00	15.00	15.00	15.00
1 100	2.42	4.38	6.85	9.81	14.84	15.00	15.00	15.00	15.00
1 150	2.31	4.19	6.55	9.38	14.20	15.00	15.00	15.00	15.00
1 200	2.22	4.02	6.28	8.99	13.61	15.00	15.00	15.00	15.00
1 250	2.13	3.86	6.03	8.63	13.06	15.00	15.00	15.00	15.00
1 300	2.05	3.71	5.80	8.30	12.56	15.00	15.00	15.00	15.00
1 350	1.97	3.57	5.58	7.99	12.10	15.00	15.00	15.00	15.00
1 400	1.90	3.44	5.38	7.71	11.66	15.00	15.00	15.00	15.00
1 450	1.83	3.32	5.20	7.44	11.26	15.00	15.00	15.00	15.00
1 500	1.77	3.21	5.02	7.19	10.89	14.61	15.00	15.00	15.00
1 550	1.72	3.11	4.86	6.96	10.53	14.14	15.00	15.00	15.00
1 600	1.66	3.01	4.71	6.74	10.21	13.69	15.00	15.00	15.00
1 650	1.61	2.92	4.57	6.54	9.90	13.28	15.00	15.00	15.00
1 700	1.56	2.84	4.43	6.35	9.61	12.89	15.00	15.00	15.00
1 750	1.52	2.75	4.31	6.17	9.33	12.52	15.00	15.00	15.00
1 800	1.48	2.68	4.19	6.00	9.07	12.17	15.00	15.00	15.00
1 850	1.44	2.61	4.07	5.83	8.83	11.84	14.95	15.00	15.00
1 900	1.40	2.54	3.97	5.68	8.59	11.53	14.55	15.00	15.00
1 950	1.36	2.47	3.86	5.53	8.37	11.24	14.18	15.00	15.00
2 000	1.33	2.41	3.77	5.40	8.16	10.96	13.83	15.00	15.00
2 050	1.30	2.35	3.68	5.26	7.97	10.69	13.49	15.00	15.00

Table 21 — (*Concluded*)

(1)	(2)	(3)	(4)	(5)	(6)	(7)	(8)	(9)	(10)
2 100	1.27	2.30	3.59	5.14	7.78	10.43	13.17	15.00	15.00
2 150	1.24	2.24	3.51	5.02	7.59	10.19	12.86	15.00	15.00
2 200	1.21	2.19	3.43	4.91	7.42	9.96	12.57	15.00	15.00
2 250	1.18	2.14	3.35	4.80	7.26	9.74	12.29	15.00	15.00
2 300	1.16	2.10	3.28	4.69	7.10	9.53	12.02	15.00	15.00
2 350	1.13	2.05	3.21	4.59	6.95	9.32	11.77	15.00	15.00
2 400	1.11	2.01	3.14	4.50	6.80	9.13	11.52	15.00	15.00
2 450	1.09	1.97	3.08	4.40	6.66	8.94	11.29	15.00	15.00
2 500	1.06	1.93	3.01	4.32	6.53	8.76	11.06	15.00	15.00
2 550	1.04	1.89	2.96	4.23	6.40	8.59	10.84	14.80	15.00
2 600	1.02	1.85	2.90	4.15	6.28	8.43	10.64	14.52	15.00
2 650	1.00	1.82	2.84	4.07	6.16	8.27	10.43	14.24	15.00
2 700	0.99	1.79	2.79	4.00	6.05	8.12	10.24	13.98	15.00
2 750	0.97	1.75	2.74	3.92	5.94	7.97	10.06	13.73	15.00
2 800	0.95	1.72	2.69	3.85	5.83	7.83	9.88	13.48	15.00
2 850	0.93	1.69	2.64	3.79	5.73	7.69	9.70	13.24	15.00
2 900	0.92	1.66	2.60	3.72	5.63	7.56	9.54	13.02	15.00
2 950	0.90	1.63	2.55	3.66	5.54	7.43	9.37	12.79	15.00
3 000	0.89	1.61	2.51	3.60	5.44	7.30	9.22	12.58	15.00
3 050	0.87	1.58	2.47	3.54	5.35	7.18	9.07	12.38	15.00
3 100	0.86	1.56	2.43	3.48	5.27	7.07	8.92	12.18	15.00
3 150	0.84	1.53	2.39	3.43	5.18	6.96	8.78	11.98	15.00
3 200	0.83	1.51	2.36	3.37	5.10	6.85	8.64	11.79	15.00
3 250	0.82	1.48	2.32	3.32	5.02	6.74	8.51	11.61	15.00
3 300	0.81	1.46	2.28	3.27	4.95	6.64	8.38	11.44	15.00
3 350	0.79	1.44	2.25	3.22	4.87	6.54	8.25	11.27	15.00
3 400	0.78	1.42	2.22	3.17	4.80	6.44	8.13	11.10	14.87
3 450	0.77	1.40	2.18	3.13	4.73	6.35	8.02	10.94	14.65
3 500	0.76	1.38	2.15	3.08	4.67	6.26	7.90	10.78	14.44
3 550	0.75	1.36	2.12	3.04	4.60	6.17	7.79	10.63	14.24
3 600	0.74	1.34	2.09	3.00	4.54	6.09	7.68	10.48	14.04
3 650	0.73	1.32	2.06	2.96	4.47	6.00	7.58	10.34	13.85
3 700	0.72	1.30	2.04	2.92	4.41	5.92	7.47	10.20	13.66
3 750	0.71	1.29	2.01	2.88	4.35	5.84	7.37	10.07	13.48
3 800	0.70	1.27	1.98	2.84	4.30	5.77	7.28	9.93	13.30
3 850	0.69	1.25	1.96	2.80	4.24	5.69	7.18	9.80	13.13
3 900	0.68	1.24	1.93	2.77	4.19	5.62	7.09	9.68	12.96
3 950	0.67	1.22	1.91	2.73	4.13	5.55	7.00	9.56	12.80
4 000	0.67	1.21	1.88	2.70	4.08	5.48	6.91	9.44	12.64
4 050	0.66	1.19	1.86	2.66	4.03	5.41	6.83	9.32	12.48
4 100	0.65	1.18	1.84	2.63	3.98	5.34	6.74	9.21	12.33
4 150	0.64	1.16	1.82	2.60	3.93	5.28	6.66	9.09	12.18
4 200	0.63	1.15	1.79	2.57	3.89	5.22	6.58	8.99	12.04
4 250	0.63	1.13	1.77	2.54	3.84	5.16	6.51	8.88	11.89
4 300	0.62	1.12	1.75	2.51	3.80	5.10	6.43	8.78	11.76
4 350	0.61	1.11	1.73	2.48	3.75	5.04	6.36	8.68	11.62
4 400	0.60	1.10	1.71	2.45	3.71	4.98	6.28	8.58	11.49
4 450	0.60	1.08	1.69	2.43	3.67	4.92	6.21	8.48	11.36
4 500	0.59	1.07	1.67	2.40	3.63	4.87	6.14	8.39	11.23
4 550	0.58	1.06	1.66	2.37	3.59	4.82	6.08	8.30	11.11
4 600	0.58	1.05	1.64	2.35	3.55	4.76	6.01	8.21	10.99
4 650	0.57	1.04	1.62	2.32	3.51	4.71	5.95	8.12	10.87
4 700	0.57	1.03	1.60	2.30	3.47	4.66	5.88	8.03	10.76
4 750	0.56	1.01	1.59	2.27	3.44	4.61	5.82	7.95	10.64
4 800	0.55	1.00	1.57	2.25	3.40	4.56	5.76	7.86	10.53
4 850	0.55	0.99	1.55	2.23	3.37	4.52	5.70	7.78	10.42
4 900	0.54	0.98	1.54	2.20	3.33	4.47	5.64	7.70	10.32
4 950	0.54	0.97	1.52	2.18	3.30	4.43	5.59	7.63	10.21
5 000	0.53	0.96	1.51	2.16	3.27	4.38	5.53	7.55	10.11
Maximum aspect ratio	7.3	6.8	6.5	6.3	5.9	4.9	4.3	3.8	3.3

Table 22 Maximum Areas for Insulating Glass Fixed on All Four Sides, m²

(*Clause* 6.1.9)

Design Wind Pressure N/m²	Nominal Thickness of Insulating Glass, *T* mm						
	3+3	4+4	5+5	6+6	8+8	10+10	12+12
(1)	(2)	(3)	(4)	(5)	(6)	(7)	(8)
500	3.19	5.78	9.04	12.95	15.00	15.00	15.00
550	2.90	5.26	8.22	11.77	15.00	15.00	15.00
600	2.66	4.82	7.54	10.79	15.00	15.00	15.00
650	2.46	4.45	6.96	9.96	15.00	15.00	15.00
700	2.28	4.13	6.46	9.25	14.00	15.00	15.00
750	2.13	3.86	6.03	8.63	13.06	15.00	15.00
800	2.00	3.62	5.65	8.09	12.25	15.00	15.00
850	1.88	3.40	5.32	7.62	11.53	15.00	15.00
900	1.77	3.21	5.02	7.19	10.89	14.61	15.00
950	1.68	3.04	4.76	6.82	10.31	13.84	15.00
1 000	1.60	2.89	4.52	6.48	9.80	13.15	15.00
1 050	1.52	2.75	4.31	6.17	9.33	12.52	15.00
1 100	1.45	2.63	4.11	5.89	8.91	11.95	15.00
1 150	1.39	2.52	3.93	5.63	8.52	11.43	14.43
1 200	1.33	2.41	3.77	5.40	8.16	10.96	13.83
1 250	1.28	2.31	3.62	5.18	7.84	10.52	13.27
1 300	1.23	2.22	3.48	4.98	7.54	10.11	12.76
1 350	1.18	2.14	3.35	4.80	7.26	9.74	12.29
1 400	1.14	2.07	3.23	4.63	7.00	9.39	11.85
1 450	1.10	1.99	3.12	4.47	6.76	9.07	11.44
1 500	1.06	1.93	3.01	4.32	6.53	8.76	11.06
1 550	1.03	1.87	2.92	4.18	6.32	8.48	10.70
1 600	1.00	1.81	2.83	4.05	6.12	8.22	10.37
1 650	0.97	1.75	2.74	3.92	5.94	7.97	10.06
1 700	0.94	1.70	2.66	3.81	5.76	7.73	9.76
1 750	0.91	1.65	2.58	3.70	5.60	7.51	9.48
1 800	0.89	1.61	2.51	3.60	5.44	7.30	9.22
1 850	0.86	1.56	2.44	3.50	5.30	7.11	8.97
1 900	0.84	1.52	2.38	3.41	5.16	6.92	8.73
1 950	0.82	1.48	2.32	3.32	5.02	6.74	8.51
2 000	0.80	1.45	2.26	3.24	4.90	6.57	8.30
2 050	0.78	1.41	2.21	3.16	4.78	6.41	8.09
2 100	0.76	1.38	2.15	3.08	4.67	6.26	7.90
2 150	0.74	1.35	2.10	3.01	4.56	6.11	7.72
2 200	0.73	1.31	2.06	2.94	4.45	5.98	7.54
2 250	0.71	1.29	2.01	2.88	4.35	5.84	7.37
2 300	0.69	1.26	1.97	2.82	4.26	5.72	7.21
2 350	0.68	1.23	1.92	2.76	4.17	5.59	7.06
2 400	0.67	1.21	1.88	2.70	4.08	5.48	6.91
2 450	0.65	1.18	1.85	2.64	4.00	5.37	6.77
2 500	0.64	1.16	1.81	2.59	3.92	5.26	6.64
2 550	0.63	1.13	1.77	2.54	3.84	5.16	6.51
2 600	0.61	1.11	1.74	2.49	3.77	5.06	6.38
2 650	0.60	1.09	1.71	2.44	3.70	4.96	6.26
2 700	0.59	1.07	1.67	2.40	3.63	4.87	6.14

Table 22 — (*Concluded*)

(1)	(2)	(3)	(4)	(5)	(6)	(7)	(8)
2 750	0.58	1.05	1.64	2.35	3.56	4.78	6.03
2 800	0.57	1.03	1.61	2.31	3.50	4.70	5.93
2 850	0.56	1.01	1.59	2.27	3.44	4.61	5.82
2 900	0.55	1.00	1.56	2.23	3.38	4.53	5.72
2 950	0.54	0.98	1.53	2.19	3.32	4.46	5.62
3 000	0.53	0.96	1.51	2.16	3.27	4.38	5.53
3 050	0.52	0.95	1.48	2.12	3.21	4.31	5.44
3 100	0.51	0.93	1.46	2.09	3.16	4.24	5.35
3 150	0.51	0.92	1.44	2.06	3.11	4.17	5.27
3 200	0.50	0.90	1.41	2.02	3.06	4.11	5.18
3 250	0.49	0.89	1.39	1.99	3.01	4.05	5.11
3 300	0.48	0.88	1.37	1.96	2.97	3.98	5.03
3 350	0.48	0.86	1.35	1.93	2.92	3.92	4.95
3 400	0.47	0.85	1.33	1.90	2.88	3.87	4.88
3 450	0.46	0.84	1.31	1.88	2.84	3.81	4.81
3 500	0.46	0.83	1.29	1.85	2.80	3.76	4.74
3 550	0.45	0.81	1.27	1.82	2.76	3.70	4.67
3 600	0.44	0.80	1.26	1.80	2.72	3.65	4.61
3 650	0.44	0.79	1.24	1.77	2.68	3.60	4.55
3 700	0.43	0.78	1.22	1.75	2.65	3.55	4.48
3 750	0.43	0.77	1.21	1.73	2.61	3.51	4.42
3 800	0.42	0.76	1.19	1.70	2.58	3.46	4.37
3 850	0.41	0.75	1.17	1.68	2.54	3.41	4.31
3 900	0.41	0.74	1.16	1.66	2.51	3.37	4.25
3 950	0.40	0.73	1.14	1.64	2.48	3.33	4.20
4 000	0.40	0.72	1.13	1.62	2.45	3.29	4.15
4 050	0.39	0.71	1.12	1.60	2.42	3.25	4.10
4 100	0.39	0.71	1.10	1.58	2.39	3.21	4.05
4 150	0.38	0.70	1.09	1.56	2.36	3.17	4.00
4 200	0.38	0.69	1.08	1.54	2.33	3.13	3.95
4 250	0.38	0.68	1.06	1.52	2.31	3.09	3.90
4 300	0.37	0.67	1.05	1.51	2.28	3.06	3.86
4 350	0.37	0.66	1.04	1.49	2.25	3.02	3.81
4 400	0.36	0.66	1.03	1.47	2.23	2.99	3.77
4 450	0.36	0.65	1.02	1.46	2.20	2.95	3.73
4 500	0.35	0.64	1.00	1.44	2.18	2.92	3.69
4 550	0.35	0.64	0.99	1.42	2.15	2.89	3.65
4 600	0.35	0.63	0.98	1.41	2.13	2.86	3.61
4 650	0.34	0.62	0.97	1.39	2.11	2.83	3.57
4 700	0.34	0.62	0.96	1.38	2.08	2.80	3.53
4 750	0.34	0.61	0.95	1.36	2.06	2.77	3.49
4 800	0.33	0.60	0.94	1.35	2.04	2.74	3.46
4 850	0.33	0.60	0.93	1.34	2.02	2.71	3.42
4 900	0.33	0.59	0.92	1.32	2.00	2.68	3.39
4 950	0.32	0.58	0.91	1.31	1.98	2.66	3.35
5 000	0.32	0.58	0.90	1.30	1.96	2.63	3.32
Maximum aspect ratio	7.3	6.8	6.5	6.3	5.9	4.9	4.3

Table 23 Maximum Area for Heat Strengthened Glass Fixed on Four Sides, m²

(*Clause* 6.1.9)

Design Wind Pressure N/m²	Nominal Thickness of Heat Strengthened Glass, *T* mm								
	3	4	5	6	8	10	12	15	19
(1)	(2)	(3)	(4)	(5)	(6)	(7)	(8)	(9)	(10)
500	3.41	6.17	9.65	13.81	15.00	15.00	15.00	15.00	15.00
550	3.10	5.61	8.77	12.56	15.00	15.00	15.00	15.00	15.00
600	2.84	5.14	8.04	11.51	15.00	15.00	15.00	15.00	15.00
650	2.62	4.75	7.42	10.63	15.00	15.00	15.00	15.00	15.00
700	2.43	4.41	6.89	9.87	14.93	15.00	15.00	15.00	15.00
750	2.27	4.11	6.43	9.21	13.93	15.00	15.00	15.00	15.00
800	2.13	3.86	6.03	8.63	13.06	15.00	15.00	15.00	15.00
850	2.00	3.63	5.67	8.13	12.29	15.00	15.00	15.00	15.00
900	1.89	3.43	5.36	7.67	11.61	15.00	15.00	15.00	15.00
950	1.79	3.25	5.08	7.27	11.00	14.76	15.00	15.00	15.00
1 000	1.70	3.09	4.82	6.91	10.45	14.02	15.00	15.00	15.00
1 050	1.62	2.94	4.59	6.58	9.95	13.36	15.00	15.00	15.00
1 100	1.55	2.80	4.38	6.28	9.50	12.75	15.00	15.00	15.00
1 150	1.48	2.68	4.19	6.01	9.09	12.19	15.00	15.00	15.00
1 200	1.42	2.57	4.02	5.76	8.71	11.69	14.75	15.00	15.00
1 250	1.36	2.47	3.86	5.53	8.36	11.22	14.16	15.00	15.00
1 300	1.31	2.37	3.71	5.31	8.04	10.79	13.61	15.00	15.00
1 350	1.26	2.29	3.57	5.12	7.74	10.39	13.11	15.00	15.00
1 400	1.22	2.20	3.45	4.93	7.46	10.02	12.64	15.00	15.00
1 450	1.17	2.13	3.33	4.76	7.21	9.67	12.21	15.00	15.00
1 500	1.14	2.06	3.22	4.60	6.97	9.35	11.80	15.00	15.00
1 550	1.10	1.99	3.11	4.46	6.74	9.05	11.42	15.00	15.00
1 600	1.06	1.93	3.01	4.32	6.53	8.76	11.06	15.00	15.00
1 650	1.03	1.87	2.92	4.19	6.33	8.50	10.73	14.64	15.00
1 700	1.00	1.81	2.84	4.06	6.15	8.25	10.41	14.21	15.00
1 750	0.97	1.76	2.76	3.95	5.97	8.01	10.11	13.80	15.00
1 800	0.95	1.71	2.68	3.84	5.81	7.79	9.83	13.42	15.00
1 850	0.92	1.67	2.61	3.73	5.65	7.58	9.57	13.06	15.00
1 900	0.90	1.62	2.54	3.64	5.50	7.38	9.31	12.71	15.00
1 950	0.87	1.58	2.47	3.54	5.36	7.19	9.08	12.39	15.00
2 000	0.85	1.54	2.41	3.45	5.23	7.01	8.85	12.08	15.00
2 050	0.83	1.50	2.35	3.37	5.10	6.84	8.63	11.78	15.00
2 100	0.81	1.47	2.30	3.29	4.98	6.68	8.43	11.50	15.00
2 150	0.79	1.43	2.24	3.21	4.86	6.52	8.23	11.24	15.00
2 200	0.77	1.40	2.19	3.14	4.75	6.37	8.04	10.98	14.71
2 250	0.76	1.37	2.14	3.07	4.64	6.23	7.87	10.74	14.38
2 300	0.74	1.34	2.10	3.00	4.54	6.10	7.69	10.50	14.07
2 350	0.72	1.31	2.05	2.94	4.45	5.97	7.53	10.28	13.77
2 400	0.71	1.29	2.01	2.88	4.35	5.84	7.37	10.07	13.48
2 450	0.69	1.26	1.97	2.82	4.27	5.72	7.22	9.86	13.21
2 500	0.68	1.23	1.93	2.76	4.18	5.61	7.08	9.66	12.94
2 550	0.67	1.21	1.89	2.71	4.10	5.50	6.94	9.47	12.69
2 600	0.65	1.19	1.86	2.66	4.02	5.39	6.81	9.29	12.44
2 650	0.64	1.16	1.82	2.61	3.94	5.29	6.68	9.12	12.21
2 700	0.63	1.14	1.79	2.56	3.87	5.19	6.55	8.95	11.98
2 750	0.62	1.12	1.75	2.51	3.80	5.10	6.44	8.78	11.76
2 800	0.61	1.10	1.72	2.47	3.73	5.01	6.32	8.63	11.55
2 850	0.60	1.08	1.69	2.42	3.67	4.92	6.21	8.48	11.35
2 900	0.59	1.06	1.66	2.38	3.60	4.84	6.10	8.33	11.16
2 950	0.58	1.05	1.63	2.34	3.54	4.75	6.00	8.19	10.97
3 000	0.57	1.03	1.61	2.30	3.48	4.67	5.90	8.05	10.78
3 050	0.56	1.01	1.58	2.26	3.43	4.60	5.80	7.92	10.61
3 100	0.55	1.00	1.56	2.23	3.37	4.52	5.71	7.79	10.44
3 150	0.54	0.98	1.53	2.19	3.32	4.45	5.62	7.67	10.27
3 200	0.53	0.96	1.51	2.16	3.27	4.38	5.53	7.55	10.11
3 250	0.52	0.95	1.48	2.13	3.22	4.31	5.45	7.43	9.95
3 300	0.52	0.93	1.46	2.09	3.17	4.25	5.36	7.32	9.80
3 350	0.51	0.92	1.44	2.06	3.12	4.19	5.28	7.21	9.66
3 400	0.50	0.91	1.42	2.03	3.07	4.12	5.21	7.10	9.52
3 450	0.49	0.89	1.40	2.00	3.03	4.06	5.13	7.00	9.38

Table 23 — (*Concluded*)

(1)	(2)	(3)	(4)	(5)	(6)	(7)	(8)	(9)	(10)
3 500	0.49	0.88	1.38	1.97	2.99	4.01	5.06	6.90	9.24
3 550	0.48	0.87	1.36	1.95	2.94	3.95	4.99	6.80	9.11
3 600	0.47	0.86	1.34	1.92	2.90	3.90	4.92	6.71	8.99
3 650	0.47	0.85	1.32	1.89	2.86	3.84	4.85	6.62	8.86
3 700	0.46	0.83	1.30	1.87	2.82	3.79	4.78	6.53	8.74
3 750	0.45	0.82	1.29	1.84	2.79	3.74	4.72	6.44	8.63
3 800	0.45	0.81	1.27	1.82	2.75	3.69	4.66	6.36	8.51
3 850	0.44	0.80	1.25	1.79	2.71	3.64	4.60	6.27	8.40
3 900	0.44	0.79	1.24	1.77	2.68	3.60	4.54	6.19	8.30
3 950	0.43	0.78	1.22	1.75	2.65	3.55	4.48	6.12	8.19
4 000	0.43	0.77	1.21	1.73	2.61	3.51	4.42	6.04	8.09
4 050	0.42	0.76	1.19	1.71	2.58	3.46	4.37	5.96	7.99
4 100	0.42	0.75	1.18	1.68	2.55	3.42	4.32	5.89	7.89
4 150	0.41	0.74	1.16	1.66	2.52	3.38	4.26	5.82	7.80
4 200	0.41	0.73	1.15	1.64	2.49	3.34	4.21	5.75	7.70
4 250	0.40	0.73	1.13	1.63	2.46	3.30	4.16	5.68	7.61
4 300	0.40	0.72	1.12	1.61	2.43	3.26	4.12	5.62	7.52
4 350	0.39	0.71	1.11	1.59	2.40	3.22	4.07	5.55	7.44
4 400	0.39	0.70	1.10	1.57	2.38	3.19	4.02	5.49	7.35
4 450	0.38	0.69	1.08	1.55	2.35	3.15	3.98	5.43	7.27
4 500	0.38	0.69	1.07	1.53	2.32	3.12	3.93	5.37	7.19
4 550	0.37	0.68	1.06	1.52	2.30	3.08	3.89	5.31	7.11
4 600	0.37	0.67	1.05	1.50	2.27	3.05	3.85	5.25	7.03
4 650	0.37	0.66	1.04	1.49	2.25	3.02	3.81	5.19	6.96
4 700	0.36	0.66	1.03	1.47	2.22	2.98	3.77	5.14	6.88
4 750	0.36	0.65	1.02	1.45	2.20	2.95	3.73	5.09	6.81
4 800	0.35	0.64	1.00	1.44	2.18	2.92	3.69	5.03	6.74
4 850	0.35	0.64	0.99	1.42	2.15	2.89	3.65	4.98	6.67
4 900	0.35	0.63	0.98	1.41	2.13	2.86	3.61	4.93	6.60
4 950	0.34	0.62	0.97	1.40	2.11	2.83	3.58	4.88	6.54
5 000	0.34	0.62	0.96	1.38	2.09	2.80	3.54	4.83	6.47
Maximum aspect ratio	7.3	6.8	6.5	6.3	5.9	4.9	4.3	3.8	3.3

Table 24 Maximum Span for Annealed Glass Fixed on Two Opposite Sides, m

(*Clause* 6.1.9)

Design Wind Pressure N/m²	Nominal Thickness of Annealed Glass, *T* mm								
	3	4	5	6	8	10	12	15	19
(1)	(2)	(3)	(4)	(5)	(6)	(7)	(8)	(9)	(10)
500	0.53	0.73	0.92	1.12	1.40	1.77	2.11	2.68	3.36
550	0.51	0.69	0.88	1.07	1.33	1.69	2.02	2.56	3.20
600	0.48	0.66	0.84	1.02	1.27	1.62	1.93	2.45	3.07
650	0.46	0.64	0.81	0.98	1.22	1.56	1.85	2.35	2.95
700	0.45	0.61	0.78	0.95	1.18	1.50	1.79	2.26	2.84
750	0.43	0.59	0.75	0.91	1.14	1.45	1.73	2.19	2.74
800	0.42	0.57	0.73	0.88	1.10	1.40	1.67	2.12	2.66
850	0.41	0.56	0.71	0.86	1.07	1.36	1.62	2.06	2.58
900	0.40	0.54	0.69	0.83	1.04	1.32	1.58	2.00	2.50
950	0.38	0.53	0.67	0.81	1.01	1.29	1.53	1.94	2.44
1 000	0.37	0.51	0.65	0.79	0.99	1.25	1.49	1.89	2.38
1 050	0.37	0.50	0.64	0.77	0.96	1.22	1.46	1.85	2.32
1 100	0.36	0.49	0.62	0.75	0.94	1.20	1.43	1.81	2.26
1 150	0.35	0.48	0.61	0.74	0.92	1.17	1.39	1.77	2.22
1 200	0.34	0.47	0.60	0.72	0.90	1.15	1.36	1.73	2.17
1 250	0.34	0.46	0.58	0.71	0.88	1.12	1.34	1.69	2.12
1 300	0.33	0.45	0.57	0.69	0.87	1.10	1.31	1.66	2.08
1 350	0.32	0.44	0.56	0.68	0.85	1.08	1.29	1.63	2.04
1 400	0.32	0.43	0.55	0.67	0.83	1.06	1.26	1.60	2.01
1 450	0.31	0.43	0.54	0.66	0.82	1.04	1.24	1.57	1.97
1 500	0.31	0.42	0.53	0.65	0.81	1.02	1.22	1.55	1.94
1 550	0.30	0.41	0.52	0.64	0.79	1.01	1.20	1.52	1.91
1 600	0.30	0.41	0.52	0.63	0.78	0.99	1.18	1.50	1.88

Table 24 — (*Concluded*)

(1)	(2)	(3)	(4)	(5)	(6)	(7)	(8)	(9)	(10)
1 650	0.29	0.40	0.51	0.62	0.77	0.98	1.16	1.48	1.85
1 700	0.29	0.39	0.50	0.61	0.76	0.96	1.15	1.45	1.82
1 750	0.28	0.39	0.49	0.60	0.75	0.95	1.13	1.43	1.80
1 800	0.28	0.38	0.49	0.59	0.74	0.93	1.11	1.41	1.77
1 850	0.28	0.38	0.48	0.58	0.73	0.92	1.10	1.39	1.75
1 900	0.27	0.37	0.47	0.57	0.72	0.91	1.08	1.37	1.72
1 950	0.27	0.37	0.47	0.57	0.71	0.90	1.07	1.36	1.70
2 000	0.27	0.36	0.46	0.56	0.70	0.89	1.06	1.34	1.68
2 050	0.26	0.36	0.46	0.55	0.69	0.88	1.04	1.32	1.66
2 100	0.26	0.35	0.45	0.55	0.68	0.87	1.03	1.31	1.64
2 150	0.26	0.35	0.44	0.54	0.67	0.86	1.02	1.29	1.62
2 200	0.25	0.35	0.44	0.53	0.67	0.85	1.01	1.28	1.60
2 250	0.25	0.34	0.43	0.53	0.66	0.84	1.00	1.26	1.58
2 300	0.25	0.34	0.43	0.52	0.65	0.83	0.99	1.25	1.57
2 350	0.24	0.34	0.43	0.52	0.64	0.82	0.97	1.24	1.55
2 400	0.24	0.33	0.42	0.51	0.64	0.81	0.96	1.22	1.53
2 450	0.24	0.33	0.42	0.51	0.63	0.80	0.95	1.21	1.52
2 500	0.24	0.32	0.41	0.50	0.62	0.79	0.95	1.20	1.50
2 550	0.23	0.32	0.41	0.50	0.62	0.79	0.94	1.19	1.49
2 600	0.23	0.32	0.40	0.49	0.61	0.78	0.93	1.18	1.47
2 650	0.23	0.32	0.40	0.49	0.61	0.77	0.92	1.16	1.46
2 700	0.23	0.31	0.40	0.48	0.60	0.76	0.91	1.15	1.45
2 750	0.23	0.31	0.39	0.48	0.60	0.76	0.90	1.14	1.43
2 800	0.22	0.31	0.39	0.47	0.59	0.75	0.89	1.13	1.42
2 850	0.22	0.30	0.39	0.47	0.58	0.74	0.89	1.12	1.41
2 900	0.22	0.30	0.38	0.46	0.58	0.74	0.88	1.11	1.39
2 950	0.22	0.30	0.38	0.46	0.57	0.73	0.87	1.10	1.38
3 000	0.22	0.30	0.38	0.46	0.57	0.72	0.86	1.09	1.37
3 050	0.21	0.29	0.37	0.45	0.57	0.72	0.86	1.09	1.36
3 100	0.21	0.29	0.37	0.45	0.56	0.71	0.85	1.08	1.35
3 150	0.21	0.29	0.37	0.45	0.56	0.71	0.84	1.07	1.34
3 200	0.21	0.29	0.36	0.44	0.55	0.70	0.84	1.06	1.33
3 250	0.21	0.28	0.36	0.44	0.55	0.70	0.83	1.05	1.32
3 300	0.21	0.28	0.36	0.44	0.54	0.69	0.82	1.04	1.31
3 350	0.20	0.28	0.36	0.43	0.54	0.69	0.82	1.04	1.30
3 400	0.20	0.28	0.35	0.43	0.54	0.68	0.81	1.03	1.29
3 450	0.20	0.28	0.35	0.43	0.53	0.68	0.80	1.02	1.28
3 500	0.20	0.27	0.35	0.42	0.53	0.67	0.80	1.01	1.27
3 550	0.20	0.27	0.35	0.42	0.52	0.67	0.79	1.01	1.26
3 600	0.20	0.27	0.34	0.42	0.52	0.66	0.79	1.00	1.25
3 650	0.20	0.27	0.34	0.41	0.52	0.66	0.78	0.99	1.24
3 700	0.19	0.27	0.34	0.41	0.51	0.65	0.78	0.99	1.23
3 750	0.19	0.27	0.34	0.41	0.51	0.65	0.77	0.98	1.23
3 800	0.19	0.26	0.33	0.41	0.51	0.64	0.77	0.97	1.22
3 850	0.19	0.26	0.33	0.40	0.50	0.64	0.76	0.97	1.21
3 900	0.19	0.26	0.33	0.40	0.50	0.64	0.76	0.96	1.20
3 950	0.19	0.26	0.33	0.40	0.50	0.63	0.75	0.95	1.20
4 000	0.19	0.26	0.33	0.40	0.49	0.63	0.75	0.95	1.19
4 050	0.19	0.26	0.32	0.39	0.49	0.62	0.74	0.94	1.18
4 100	0.19	0.25	0.32	0.39	0.49	0.62	0.74	0.94	1.17
4 150	0.18	0.25	0.32	0.39	0.48	0.62	0.73	0.93	1.17
4 200	0.18	0.25	0.32	0.39	0.48	0.61	0.73	0.92	1.16
4 250	0.18	0.25	0.32	0.38	0.48	0.61	0.72	0.92	1.15
4 300	0.18	0.25	0.31	0.38	0.48	0.60	0.72	0.91	1.15
4 350	0.18	0.25	0.31	0.38	0.47	0.60	0.72	0.91	1.14
4 400	0.18	0.24	0.31	0.38	0.47	0.60	0.71	0.90	1.13
4 450	0.18	0.24	0.31	0.38	0.47	0.59	0.71	0.90	1.13
4 500	0.18	0.24	0.31	0.37	0.47	0.59	0.70	0.89	1.12
4 550	0.18	0.24	0.31	0.37	0.46	0.59	0.70	0.89	1.11
4 600	0.17	0.24	0.30	0.37	0.46	0.58	0.70	0.88	1.11
4 650	0.17	0.24	0.30	0.37	0.46	0.58	0.69	0.88	1.10
4 700	0.17	0.24	0.30	0.36	0.46	0.58	0.69	0.87	1.10
4 750	0.17	0.24	0.30	0.36	0.45	0.58	0.69	0.87	1.09
4 800	0.17	0.23	0.30	0.36	0.45	0.57	0.68	0.86	1.08
4 850	0.17	0.23	0.30	0.36	0.45	0.57	0.68	0.86	1.08
4 900	0.17	0.23	0.29	0.36	0.45	0.57	0.68	0.86	1.07
4 950	0.17	0.23	0.29	0.36	0.44	0.56	0.67	0.85	1.07
5 000	0.17	0.23	0.29	0.35	0.44	0.56	0.67	0.85	1.06

Table 25 Maximum Span for Laminated Glass Fixed on Two Opposite Sides, m

(*Clause* 6.1.9)

Design Wind Pressure N/m²	Nominal Thickness of Laminated Glass, *T* mm					
	5.38	6.38	8.38	10.38	12.38	16.38
(1)	(2)	(3)	(4)	(5)	(6)	(7)
500	0.79	0.95	1.25	1.59	1.92	2.50
550	0.75	0.90	1.19	1.51	1.83	2.38
600	0.72	0.87	1.14	1.45	1.76	2.28
650	0.69	0.83	1.10	1.39	1.69	2.19
700	0.67	0.80	1.06	1.34	1.63	2.11
750	0.65	0.77	1.02	1.30	1.57	2.04
800	0.62	0.75	0.99	1.25	1.52	1.98
850	0.61	0.73	0.96	1.22	1.48	1.92
900	0.59	0.71	0.93	1.18	1.43	1.86
950	0.57	0.69	0.91	1.15	1.40	1.81
1 000	0.56	0.67	0.88	1.12	1.36	1.77
1 050	0.55	0.65	0.86	1.09	1.33	1.72
1 100	0.53	0.64	0.84	1.07	1.30	1.68
1 150	0.52	0.63	0.82	1.05	1.27	1.65
1 200	0.51	0.61	0.81	1.02	1.24	1.61
1 250	0.50	0.60	0.79	1.00	1.22	1.58
1 300	0.49	0.59	0.77	0.98	1.19	1.55
1 350	0.48	0.58	0.76	0.97	1.17	1.52
1 400	0.47	0.57	0.75	0.95	1.15	1.49
1 450	0.46	0.56	0.73	0.93	1.13	1.47
1 500	0.46	0.55	0.72	0.92	1.11	1.44
1 550	0.45	0.54	0.71	0.90	1.09	1.42
1 600	0.44	0.53	0.70	0.89	1.08	1.40
1 650	0.43	0.52	0.69	0.87	1.06	1.38
1 700	0.43	0.51	0.68	0.86	1.04	1.35
1 750	0.42	0.51	0.67	0.85	1.03	1.34
1 800	0.42	0.50	0.66	0.84	1.01	1.32
1 850	0.41	0.49	0.65	0.82	1.00	1.30
1 900	0.41	0.49	0.64	0.81	0.99	1.28
1 950	0.40	0.48	0.63	0.80	0.97	1.27
2 000	0.40	0.47	0.62	0.79	0.96	1.25
2 050	0.39	0.47	0.62	0.78	0.95	1.23
2 100	0.39	0.46	0.61	0.77	0.94	1.22
2 150	0.38	0.46	0.60	0.77	0.93	1.20
2 200	0.38	0.45	0.60	0.76	0.92	1.19
2 250	0.37	0.45	0.59	0.75	0.91	1.18
2 300	0.37	0.44	0.58	0.74	0.90	1.16
2 350	0.36	0.44	0.58	0.73	0.89	1.15
2 400	0.36	0.43	0.57	0.72	0.88	1.14
2 450	0.36	0.43	0.56	0.72	0.87	1.13
2 500	0.35	0.42	0.56	0.71	0.86	1.12
2 550	0.35	0.42	0.55	0.70	0.85	1.11
2 600	0.35	0.42	0.55	0.70	0.84	1.10

Table 25 — (*Concluded*)

(1)	(2)	(3)	(4)	(5)	(6)	(7)
2 650	0.34	0.41	0.54	0.69	0.84	1.09
2 700	0.34	0.41	0.54	0.68	0.83	1.08
2 750	0.34	0.40	0.53	0.68	0.82	1.07
2 800	0.33	0.40	0.53	0.67	0.81	1.06
2 850	0.33	0.40	0.52	0.66	0.81	1.05
2 900	0.33	0.39	0.52	0.66	0.80	1.04
2 950	0.33	0.39	0.51	0.65	0.79	1.03
3 000	0.32	0.39	0.51	0.65	0.79	1.02
3 050	0.32	0.38	0.51	0.64	0.78	1.01
3 100	0.32	0.38	0.50	0.64	0.77	1.00
3 150	0.31	0.38	0.50	0.63	0.77	1.00
3 200	0.31	0.37	0.49	0.63	0.76	0.99
3 250	0.31	0.37	0.49	0.62	0.75	0.98
3 300	0.31	0.37	0.49	0.62	0.75	0.97
3 350	0.31	0.37	0.48	0.61	0.74	0.97
3 400	0.30	0.36	0.48	0.61	0.74	0.96
3 450	0.30	0.36	0.48	0.60	0.73	0.95
3 500	0.30	0.36	0.47	0.60	0.73	0.94
3 550	0.30	0.36	0.47	0.60	0.72	0.94
3 600	0.29	0.35	0.47	0.59	0.72	0.93
3 650	0.29	0.35	0.46	0.59	0.71	0.92
3 700	0.29	0.35	0.46	0.58	0.71	0.92
3 750	0.29	0.35	0.46	0.58	0.70	0.91
3 800	0.29	0.34	0.45	0.58	0.70	0.91
3 850	0.28	0.34	0.45	0.57	0.69	0.90
3 900	0.28	0.34	0.45	0.57	0.69	0.89
3 950	0.28	0.34	0.44	0.56	0.68	0.89
4 000	0.28	0.34	0.44	0.56	0.68	0.88
4 050	0.28	0.33	0.44	0.56	0.68	0.88
4 100	0.28	0.33	0.44	0.55	0.67	0.87
4 150	0.27	0.33	0.43	0.55	0.67	0.87
4 200	0.27	0.33	0.43	0.55	0.66	0.86
4 250	0.27	0.33	0.43	0.54	0.66	0.86
4 300	0.27	0.32	0.43	0.54	0.66	0.85
4 350	0.27	0.32	0.42	0.54	0.65	0.85
4 400	0.27	0.32	0.42	0.53	0.65	0.84
4 450	0.26	0.32	0.42	0.53	0.65	0.84
4 500	0.26	0.32	0.42	0.53	0.64	0.83
4 550	0.26	0.31	0.41	0.53	0.64	0.83
4 600	0.26	0.31	0.41	0.52	0.63	0.82
4 650	0.26	0.31	0.41	0.52	0.63	0.82
4 700	0.26	0.31	0.41	0.52	0.63	0.81
4 750	0.26	0.31	0.41	0.51	0.62	0.81
4 800	0.26	0.31	0.40	0.51	0.62	0.81
4 850	0.25	0.30	0.40	0.51	0.62	0.80
4 900	0.25	0.30	0.40	0.51	0.61	0.80
4 950	0.25	0.30	0.40	0.50	0.61	0.79
5 000	0.25	0.30	0.40	0.50	0.61	0.79

Table 26 Maximum Span for Tempered Glass Fixed on Two Opposite Sides, m

(*Clause* 6.1.9)

Design Wind Pressure N/m²	Nominal Thickness of Tempered Glass, *T* mm								
	3	4	5	6	8	10	12	15	19
(1)	(2)	(3)	(4)	(5)	(6)	(7)	(8)	(9)	(10)
500	0.62	0.86	1.09	1.32	1.52	1.93	2.30	2.92	3.66
550	0.60	0.82	1.04	1.26	1.45	1.84	2.20	2.78	3.49
600	0.57	0.78	0.99	1.20	1.39	1.76	2.10	2.66	3.34
650	0.55	0.75	0.95	1.16	1.33	1.69	2.02	2.56	3.21
700	0.53	0.72	0.92	1.11	1.29	1.63	1.95	2.47	3.09
750	0.51	0.70	0.89	1.08	1.24	1.58	1.88	2.38	2.99
800	0.49	0.68	0.86	1.04	1.20	1.53	1.82	2.31	2.89
850	0.48	0.66	0.83	1.01	1.17	1.48	1.77	2.24	2.81
900	0.47	0.64	0.81	0.98	1.13	1.44	1.72	2.18	2.73
950	0.45	0.62	0.79	0.96	1.10	1.40	1.67	2.12	2.65
1 000	0.44	0.60	0.77	0.93	1.08	1.37	1.63	2.06	2.59
1 050	0.43	0.59	0.75	0.91	1.05	1.33	1.59	2.01	2.52
1 100	0.42	0.58	0.73	0.89	1.03	1.30	1.55	1.97	2.47
1 150	0.41	0.56	0.72	0.87	1.00	1.27	1.52	1.92	2.41
1 200	0.40	0.55	0.70	0.85	0.98	1.25	1.49	1.88	2.36
1 250	0.39	0.54	0.69	0.83	0.96	1.22	1.46	1.85	2.31
1 300	0.39	0.53	0.67	0.82	0.94	1.20	1.43	1.81	2.27
1 350	0.38	0.52	0.66	0.80	0.93	1.18	1.40	1.78	2.23
1 400	0.37	0.51	0.65	0.79	0.91	1.15	1.38	1.74	2.19
1 450	0.37	0.50	0.64	0.77	0.89	1.13	1.35	1.71	2.15
1 500	0.36	0.49	0.63	0.76	0.88	1.12	1.33	1.69	2.11
1 550	0.35	0.49	0.62	0.75	0.86	1.10	1.31	1.66	2.08
1 600	0.35	0.48	0.61	0.74	0.85	1.08	1.29	1.63	2.05
1 650	0.34	0.47	0.60	0.73	0.84	1.06	1.27	1.61	2.01
1 700	0.34	0.46	0.59	0.71	0.82	1.05	1.25	1.58	1.98
1 750	0.33	0.46	0.58	0.70	0.81	1.03	1.23	1.56	1.96
1 800	0.33	0.45	0.57	0.69	0.80	1.02	1.21	1.54	1.93
1 850	0.32	0.44	0.56	0.68	0.79	1.00	1.20	1.52	1.90
1 900	0.32	0.44	0.56	0.68	0.78	0.99	1.18	1.50	1.88
1 950	0.32	0.43	0.55	0.67	0.77	0.98	1.17	1.48	1.85
2 000	0.31	0.43	0.54	0.66	0.76	0.97	1.15	1.46	1.83
2 050	0.31	0.42	0.54	0.65	0.75	0.95	1.14	1.44	1.81
2 100	0.30	0.42	0.53	0.64	0.74	0.94	1.12	1.42	1.79
2 150	0.30	0.41	0.52	0.64	0.73	0.93	1.11	1.41	1.76
2 200	0.30	0.41	0.52	0.63	0.73	0.92	1.10	1.39	1.74
2 250	0.29	0.40	0.51	0.62	0.72	0.91	1.09	1.38	1.72
2 300	0.29	0.40	0.51	0.61	0.71	0.90	1.07	1.36	1.71
2 350	0.29	0.39	0.50	0.61	0.70	0.89	1.06	1.35	1.69
2 400	0.28	0.39	0.50	0.60	0.69	0.88	1.05	1.33	1.67
2 450	0.28	0.39	0.49	0.60	0.69	0.87	1.04	1.32	1.65
2 500	0.28	0.38	0.49	0.59	0.68	0.86	1.03	1.31	1.64
2 550	0.28	0.38	0.48	0.58	0.67	0.86	1.02	1.29	1.62
2 600	0.27	0.38	0.48	0.58	0.67	0.85	1.01	1.28	1.60
2 650	0.27	0.37	0.47	0.57	0.66	0.84	1.00	1.27	1.59
2 700	0.27	0.37	0.47	0.57	0.65	0.83	0.99	1.26	1.57
2 750	0.27	0.36	0.46	0.56	0.65	0.82	0.98	1.24	1.56
2 800	0.26	0.36	0.46	0.56	0.64	0.82	0.97	1.23	1.55
2 850	0.26	0.36	0.46	0.55	0.64	0.81	0.96	1.22	1.53
2 900	0.26	0.36	0.45	0.55	0.63	0.80	0.96	1.21	1.52
2 950	0.26	0.35	0.45	0.54	0.63	0.80	0.95	1.20	1.51
3 000	0.25	0.35	0.44	0.54	0.62	0.79	0.94	1.19	1.49
3 050	0.25	0.35	0.44	0.53	0.62	0.78	0.93	1.18	1.48
3 100	0.25	0.34	0.44	0.53	0.61	0.78	0.92	1.17	1.47
3 150	0.25	0.34	0.43	0.52	0.61	0.77	0.92	1.16	1.46
3 200	0.25	0.34	0.43	0.52	0.60	0.76	0.91	1.15	1.45
3 250	0.24	0.34	0.43	0.52	0.60	0.76	0.90	1.14	1.44
3 300	0.24	0.33	0.42	0.51	0.59	0.75	0.90	1.14	1.42
3 350	0.24	0.33	0.42	0.51	0.59	0.75	0.89	1.13	1.41
3 400	0.24	0.33	0.42	0.51	0.58	0.74	0.88	1.12	1.40
3 450	0.24	0.33	0.41	0.50	0.58	0.74	0.88	1.11	1.39
3 500	0.24	0.32	0.41	0.50	0.57	0.73	0.87	1.10	1,38

Table 26 — (*Concluded*)

(1)	(2)	(3)	(4)	(5)	(6)	(7)	(8)	(9)	(10)
3 550	0.23	0.32	0.41	0.49	0.57	0.73	0.86	1.10	1.37
3 600	0.23	0.32	0.40	0.49	0.57	0.72	0.86	1.09	1.36
3 650	0.23	0.32	0.40	0.49	0.56	0.72	0.85	1.08	1.35
3 700	0.23	0.31	0.40	0.48	0.56	0.71	0.85	1.07	1.34
3 750	0.23	0.31	0.40	0.48	0.56	0.71	0.84	1.07	1.34
3 800	0.23	0.31	0.39	0.48	0.55	0.70	0.84	1.06	1.33
3 850	0.22	0.31	0.39	0.47	0.55	0.70	0.83	1.05	1.32
3 900	0.22	0.31	0.39	0.47	0.54	0.69	0.82	1.05	1.31
3 950	0.22	0.30	0.39	0.47	0.54	0.69	0.82	1.04	1.30
4 000	0.22	0.30	0.38	0.47	0.54	0.68	0.81	1.03	1.29
4 050	0.22	0.30	0.38	0.46	0.53	0.68	0.81	1.03	1.29
4 100	0.22	0.30	0.38	0.46	0.53	0.67	0.80	1.02	1.28
4 150	0.22	0.30	0.38	0.46	0.53	0.67	0.80	1.01	1.27
4 200	0.22	0.30	0.37	0.45	0.52	0.67	0.79	1.01	1.26
4 250	0.21	0.29	0.37	0.45	0.52	0.66	0.79	1.00	1.25
4 300	0.21	0.29	0.37	0.45	0.52	0.66	0.79	1.00	1.25
4 350	0.21	0.29	0.37	0.45	0.52	0.66	0.78	0.99	1.24
4 400	0.21	0.29	0.37	0.44	0.51	0.65	0.78	0.98	1.23
4 450	0.21	0.29	0.36	0.44	0.51	0.65	0.77	0.98	1.23
4 500	0.21	0.29	0.36	0.44	0.51	0.64	0.77	0.97	1.22
4 550	0.21	0.28	0.36	0.44	0.50	0.64	0.76	0.97	1.21
4 600	0.21	0.28	0.36	0.43	0.50	0.64	0.76	0.96	1.21
4 650	0.20	0.28	0.36	0.43	0.50	0.63	0.75	0.96	1.20
4 700	0.20	0.28	0.35	0.43	0.50	0.63	0.75	0.95	1.19
4 750	0.20	0.28	0.35	0.43	0.49	0.63	0.75	0.95	1.19
4 800	0.20	0.28	0.35	0.43	0.49	0.62	0.74	0.94	1.18
4 850	0.20	0.27	0.35	0.42	0.49	0.62	0.74	0.94	1.17
4 900	0.20	0.27	0.35	0.42	0.49	0.62	0.74	0.93	1.17
4 950	0.20	0.27	0.35	0.42	0.48	0.61	0.73	0.93	1.16
5 000	0.20	0.27	0.34	0.42	0.48	0.61	0.73	0.92	1.16

Table 27 Maximum Span for Heat Strengthened Glass Fixed on Two Opposite Sides, m

(*Clause* 6.1.9)

Design Wind Pressure N/m²	Nominal Thickness of Heat Strengthened Glass, *T* mm								
	3	4	5	6	8	10	12	15	19
(1)	(2)	(3)	(4)	(5)	(6)	(7)	(8)	(9)	(10)
500	0.50	0.68	0.87	1.05	1.22	1.55	1.84	2.34	2.93
550	0.48	0.65	0.83	1.00	1.16	1.47	1.76	2.23	2.79
600	0.46	0.62	0.79	0.96	1.11	1.41	1.68	2.13	2.67
650	0.44	0.60	0.76	0.92	1.07	1.36	1.62	2.05	2.57
700	0.42	0.58	0.73	0.89	1.03	1.31	1.56	1.97	2.47
750	0.41	0.56	0.71	0.86	0.99	1.26	1.50	1.91	2.39
800	0.39	0.54	0.69	0.83	0.96	1.22	1.46	1.85	2.31
850	0.38	0.52	0.67	0.81	0.93	1.19	1.41	1.79	2.24
900	0.37	0.51	0.65	0.79	0.91	1.15	1.37	1.74	2.18
950	0.36	0.50	0.63	0.76	0.88	1.12	1.34	1.69	2.12
1 000	0.35	0.48	0.61	0.75	0.86	1.09	1.30	1.65	2.07
1 050	0.34	0.47	0.60	0.73	0.84	1.07	1.27	1.61	2.02
1 100	0.34	0.46	0.59	0.71	0.82	1.04	1.24	1.57	1.97
1 150	0.33	0.45	0.57	0.69	0.80	1.02	1.21	1.54	1.93
1 200	0.32	0.44	0.56	0.68	0.79	1.00	1.19	1.51	1.89
1 250	0.32	0.43	0.55	0.67	0.77	0.98	1.16	1.48	1.85
1 300	0.31	0.42	0.54	0.65	0.75	0.96	1.14	1.45	1.82
1 350	0.30	0.42	0.53	0.64	0.74	0.94	1.12	1.42	1.78
1 400	0.30	0.41	0.52	0.63	0.73	0.92	1.10	1.40	1.75
1 450	0.29	0.40	0.51	0.62	0.71	0.91	1.08	1.37	1.72
1 500	0.29	0.40	0.50	0.61	0.70	0.89	1.06	1.35	1.69
1 550	0.28	0.39	0.49	0.60	0.69	0.88	1.05	1.33	1.66
1 600	0.28	0.38	0.49	0.59	0.68	0.86	1.03	1.31	1.64
1 650	0.27	0.38	0.48	0.58	0.67	0.85	1.01	1.29	1.61
1 700	0.27	0.37	0.47	0.57	0.66	0.84	1.00	1.27	1.59
1 750	0.27	0.37	0.46	0.56	0.65	0.83	0.98	1.25	1.56

Table 27 — (*Concluded*)

(1)	(2)	(3)	(4)	(5)	(6)	(7)	(8)	(9)	(10)
1 800	0.26	0.36	0.46	0.56	0.64	0.81	0.97	1.23	1.54
1 850	0.26	0.36	0.45	0.55	0.63	0.80	0.96	1.21	1.52
1 900	0.26	0.35	0.45	0.54	0.62	0.79	0.94	1.20	1.50
1 950	0.25	0.35	0.44	0.53	0.62	0.78	0.93	1.18	1.48
2 000	0.25	0.34	0.43	0.53	0.61	0.77	0.92	1.17	1.46
2 050	0.25	0.34	0.43	0.52	0.60	0.76	0.91	1.15	1.45
2 100	0.24	0.33	0.42	0.51	0.59	0.75	0.90	1.14	1.43
2 150	0.24	0.33	0.42	0.51	0.59	0.75	0.89	1.13	1.41
2 200	0.24	0.33	0.41	0.50	0.58	0.74	0.88	1.11	1.40
2 250	0.24	0.32	0.41	0.50	0.57	0.73	0.87	1.10	1.38
2 300	0.23	0.32	0.41	0.49	0.57	0.72	0.86	1.09	1.36
2 350	0.23	0.32	0.40	0.49	0.56	0.71	0.85	1.08	1.35
2 400	0.23	0.31	0.40	0.48	0.56	0.71	0.84	1.07	1.34
2 450	0.23	0.31	0.39	0.48	0.55	0.70	0.83	1.05	1.32
2 500	0.22	0.31	0.39	0.47	0.54	0.69	0.82	1.04	1.31
2 550	0.22	0.30	0.38	0.47	0.54	0.68	0.82	1.03	1.30
2 600	0.22	0.30	0.38	0.46	0.53	0.68	0.81	1.02	1.28
2 650	0.22	0.30	0.38	0.46	0.53	0.67	0.80	1.01	1.27
2 700	0.21	0.29	0.37	0.45	0.52	0.67	0.79	1.00	1.26
2 750	0.21	0.29	0.37	0.45	0.52	0.66	0.79	1.00	1.25
2 800	0.21	0.29	0.37	0.45	0.51	0.65	0.78	0.99	1.24
2 850	0.21	0.29	0.36	0.44	0.51	0.65	0.77	0.98	1.23
2 900	0.21	0.28	0.36	0.44	0.51	0.64	0.76	0.97	1.22
2 950	0.21	0.28	0.36	0.43	0.50	0.64	0.76	0.96	1.21
3 000	0.20	0.28	0.35	0.43	0.50	0.63	0.75	0.95	1.19
3 050	0.20	0.28	0.35	0.43	0.49	0.63	0.75	0.95	1.19
3 100	0.20	0.27	0.35	0.42	0.49	0.62	0.74	0.94	1.18
3 150	0.20	0.27	0.35	0.42	0.48	0.62	0.73	0.93	1.17
3 200	0.20	0.27	0.34	0.42	0.48	0.61	0.73	0.92	1.16
3 250	0.20	0.27	0.34	0.41	0.48	0.61	0.72	0.92	1.15
3 300	0.19	0.27	0.34	0.41	0.47	0.60	0.72	0.91	1.14
3 350	0.19	0.26	0.34	0.41	0.47	0.60	0.71	0.90	1.13
3 400	0.19	0.26	0.33	0.40	0.47	0.59	0.71	0.90	1.12
3 450	0.19	0.26	0.33	0.40	0.46	0.59	0.70	0.89	1.11
3 500	0.19	0.26	0.33	0.40	0.46	0.58	0.70	0.88	1.11
3 550	0.19	0.26	0.33	0.40	0.46	0.58	0.69	0.88	1.10
3 600	0.19	0.25	0.32	0.39	0.45	0.58	0.69	0.87	1.09
3 650	0.18	0.25	0.32	0.39	0.45	0.57	0.68	0.86	1.08
3 700	0.18	0.25	0.32	0.39	0.45	0.57	0.68	0.86	1.08
3 750	0.18	0.25	0.32	0.38	0.44	0.56	0.67	0.85	1.07
3 800	0.18	0.25	0.32	0.38	0.44	0.56	0.67	0.85	1.06
3 850	0.18	0.25	0.31	0.38	0.44	0.56	0.66	0.84	1.05
3 900	0.18	0.24	0.31	0.38	0.44	0.55	0.66	0.84	1.05
3 950	0.18	0.24	0.31	0.37	0.43	0.55	0.66	0.83	1.04
4 000	0.18	0.24	0.31	0.37	0.43	0.55	0.65	0.83	1.03
4 050	0.18	0.24	0.31	0.37	0.43	0.54	0.65	0.82	1.03
4 100	0.17	0.24	0.30	0.37	0.42	0.54	0.64	0.82	1.02
4 150	0.17	0.24	0.30	0.37	0.42	0.54	0.64	0.81	1.02
4 200	0.17	0.24	0.30	0.36	0.42	0.53	0.64	0.81	1.01
4 250	0.17	0.23	0.30	0.36	0.42	0.53	0.63	0.80	1.00
4 300	0.17	0.23	0.30	0.36	0.41	0.53	0.63	0.80	1.00
4 350	0.17	0.23	0.29	0.36	0.41	0.52	0.62	0.79	0.99
4 400	0.17	0.23	0.29	0.36	0.41	0.52	0.62	0.79	0.99
4 450	0.17	0.23	0.29	0.35	0.41	0.52	0.62	0.78	0.98
4 500	0.17	0.23	0.29	0.35	0.41	0.52	0.61	0.78	0.98
4 550	0.17	0.23	0.29	0.35	0.40	0.51	0.61	0.77	0.97
4 600	0.16	0.23	0.29	0.35	0.40	0.51	0.61	0.77	0.97
4 650	0.16	0.22	0.28	0.35	0.40	0.51	0.60	0.77	0.96
4 700	0.16	0.22	0.28	0.34	0.40	0.50	0.60	0.76	0.95
4 750	0.16	0.22	0.28	0.34	0.39	0.50	0.60	0.76	0.95
4 800	0.16	0.22	0.28	0.34	0.39	0.50	0.59	0.75	0.94
4 850	0.16	0.22	0.28	0.34	0.39	0.50	0.59	0.75	0.94
4 900	0.16	0.22	0.28	0.34	0.39	0.49	0.59	0.75	0.94
4 950	0.16	0.22	0.28	0.33	0.39	0.49	0.59	0.74	0.93
5 000	0.16	0.22	0.27	0.33	0.38	0.49	0.58	0.74	[redacted]

6.2.2 *Site Working and Glass Machining Operation*

6.2.2.1 Heat-strengthened and toughened glass shall not be cut or worked after heat treatment. All necessary cutting, drilling, notching and edge-working shall be carried out to correct dimensions prior to value addition to the glass, such as toughening/tempering/heat strengthening. The edges and surfaces of all glass types shall not be damaged during fixing.

6.2.3 *Dimensional Requirement*

The dimensions for edge clearance, edge cover, front and back clearance, rebate depth is selected in accordance with the requirements in **4.5.2**.

6.2.4 *Glazing Materials*

6.2.4.1 *Compatibility of materials*

A glazing material shall be used only when compatible with contiguous materials, including the rebate surface finish, setting or location blocks, distance pieces and glass type are available.

6.2.4.2 *Application of materials*

The application of glazing materials shall be in accordance with relevant/available Indian Standard or manufacturer's recommendations.

6.2.4.3 *Life expectancy of materials*

A glazing material shall only be used where its life expectancy (durability) has been established. The manufacturers' advice/guarantee should be sought for information regarding life expectancy.

6.2.5 *Setting Blocks*

The number and location of setting blocks shall be as shown in Figs. 10 and 12. Generally, setting blocks shall be,

a) positioned at quarter points or not less than 30 mm from the corner, whichever is lesser;
b) the minimum width of each setting block shall be not less than the glass thickness; and
c) If a glazing bridge is used then the thickness of the glazing bridge can be added to the thickness of the setting block to achieve the minimum gap of 6 mm between the edge of glass and the framing member.

Setting blocks shall be located to equally support all panes of glass, and shall be fixed to prevent displacement during installation and service. The minimum length of each setting block (or two blocks side by side) shall be 25 mm in length for every square metre of glass area, with a minimum length of 50 mm. When wood is used as the material for setting blocks, only the seasoned ones should be used as green wood may shrink laterally (in the process of attaining equilibrium moisture content over a period of time) and result in loosened installations.

For example, a 3.0 m^2 glass area, 3.0 × 25 mm = 75 mm long, that is, 75 mm is the length of each setting block.

Setting blocks shall be of resilient, load-bearing, non-absorbent, rot-proof, and material that is compatible with all other glazing materials conforming to available standards (if any) that may come into contact with the blocks.

NOTES

1 Setting blocks are used between the bottom edge of the unit and the frame to centralize and equally support both panes of glass.

2 Setting block width and location should not restrict water drainage.

3 Extruded rubber material with 80 - 90 shore A hardness is recommended.

4 Shaped setting blocks will be required for a glazing platform.

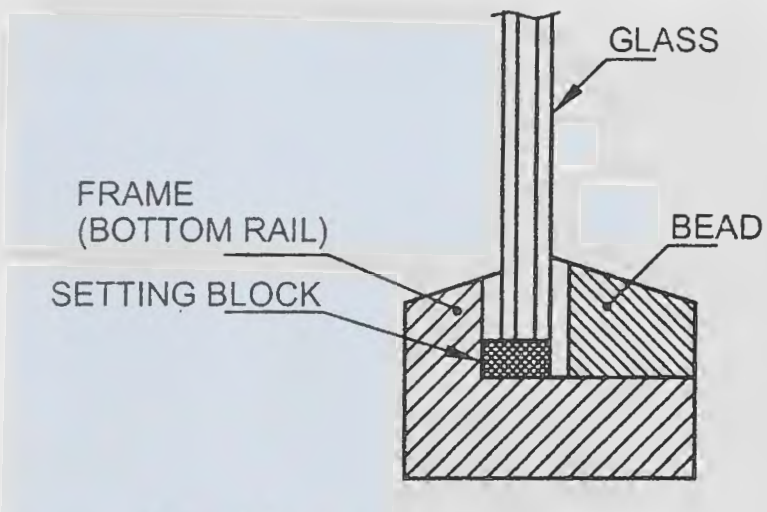

FIG. 10 POSITION OF SETTING BLOCK

6.2.6 *Location Blocks*

The number and position of location blocks shall be as shown in Figs. 11 and 12.

Location blocks shall be,

a) of minimum of 25 mm in length;
b) at least as wide as the glass thickness;
c) positively located to prevent displacement in service; and

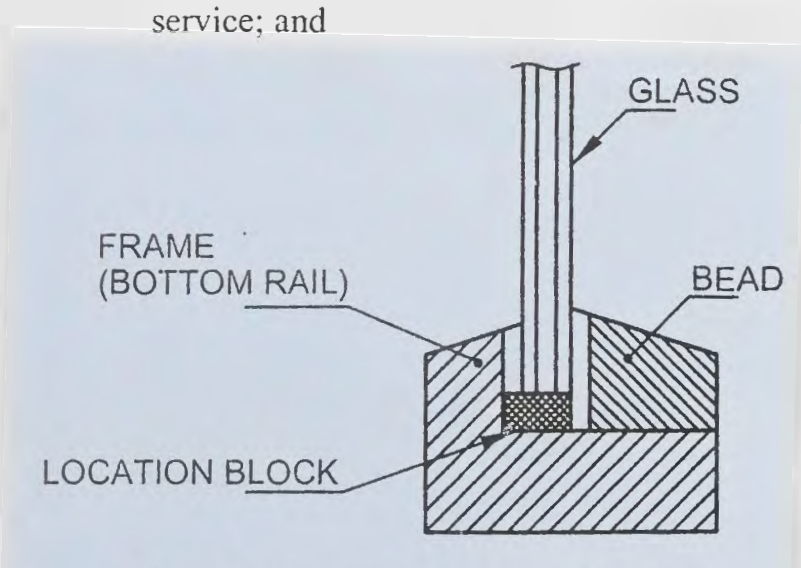

FIG. 11 POSITION OF LOCATION BLOCK

(a) FIXED LIGHT

(b) SIDE HUNG, PROJECTED SIDE HUNG OR DOOR

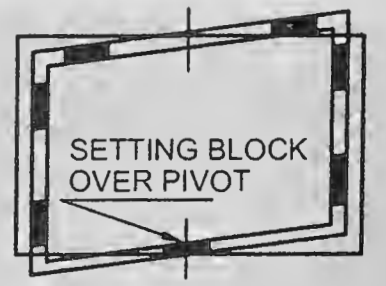

(c) VERTICALLY PIVOTED HUNG CENTRALLY (OPENING 90° or 180°)

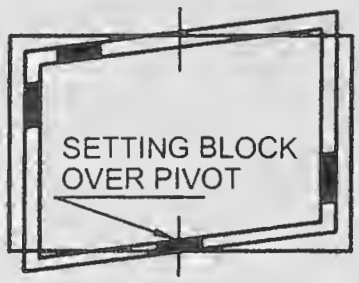

(d) VERTICALLY PIVOTED (HUNG OFF-CENTRE)

(e) TOP HUNG OR PROJECTED TOP HUNG

(f) BOTTOM HUNG

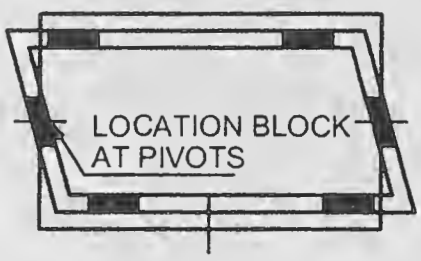

(g) HORIZONTALLY PIVOTED AND OPENING UPTO 90° or 180°

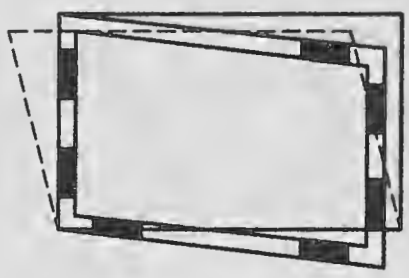

(h) TILT AND TURN

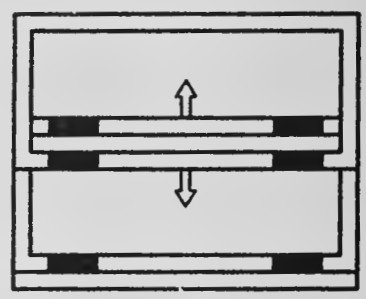

(j) VERTICAL SLIDING

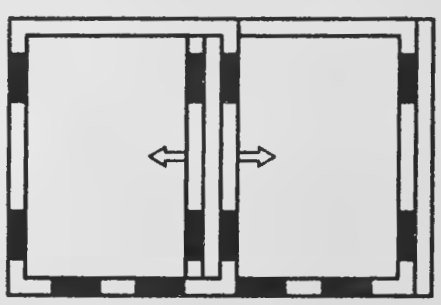

(k) HORIZONTAL SLIDING (6 BLOCK TO EACH PANE)

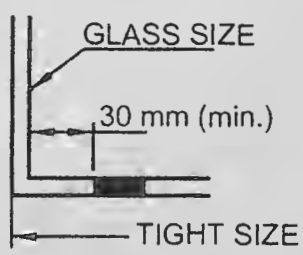

(m) MINIMUM POSITION OF BLOCKS FOR ALL TYPE OF CASEMENTS AND SLIDING WINDOWS

FIG. 12 RECOMMENDED POSITIONS OF SETTING AND LOCATION BLOCKS FOR THE SITE GLAZING OF SOME TYPES OF DOORS AND WINDOWS

d) sufficiently resilient to accommodate movement within the frame, without imposing stress on the glass, and of resilient, non-absorbent material.

NOTES

1 Location blocks are used between the edges of the glass and the frame to prevent movement of the glass within the frame by thermal expansion or when the window or door is opened or closed. They are required to prevent the weight of the glass from causing the frame to become out of square.

2 Extruded rubber material with 55 - 65 shore A hardness is recommended.

6.2.7 *Distance Pieces*

Distance pieces, as shown in Fig. 13, used where required, shall be,

a) of resilient, non-absorbent material;
b) 25 mm long and of a height to suit the depth of the rebate and the method of glazing; and
c) spaced opposite each other, approximately 50 mm from each corner at intervals of not more than 300 mm.

The thickness shall be equal to the front and back clearance, to retain the glass firmly in the frame.

NOTES

1 Distance pieces are required to prevent displacement of glazing compounds or sealant by external loading, such as wind pressure.

2 Extruded rubber material with 55 - 65 shore A hardness is required.

6.2.8 *Rebates and Grooves for Installation*

Rebates, grooves and beads shall be cleaned and free from grease, moisture and other contaminants. All sealant surfaces shall be primed or sealed in accordance with the recommendations of the manufacturer of the glazing material.

The number and location of setting blocks and location blocks shall be as shown in Fig. 10 to Fig. 12, wherever necessary to maintain the requisite edge clearance. Each block shall support the full thickness of the glass.

6.2.9 *Glazing Beads*

Where used, glazing beads shall be capable of restraining the glass under all design forces.

6.2.10 *Structural Sealants*

Structural silicone shall be installed such that a full adhesive bond to the substrate is achieved. Application of structural silicone may require prior cleaning and or priming of the substrate.

Applied structural silicones shall not be installed adjacent to other materials that may be chemically incompatible with the structural sealant and cause a loss of adhesion or adverse chemical changes within the structural silicone that could lead to a loss of strength in the structural silicone. For guidance on the installation of structural silicone, reference to available standards/literatures may be made.

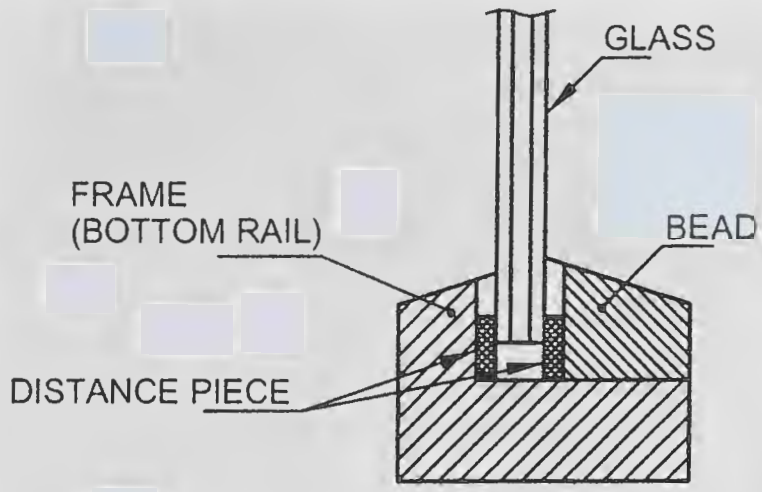

FIG. 13 POSITION OF DISTANCE PIECES

6.3 Design Criteria

6.3.1 *Frame Support Condition*

6.3.1.1 *Maximum area of glass panels subjected to wind loading*

The maximum span for a given standard nominal thickness of ordinary annealed, laminated, heat-strengthened and toughened glass for a given panel size shall be determined in accordance with **6.3.2**, **6.3.3** and **6.3.4** as applicable for the relevant support conditions. For heat strengthened laminated and toughened laminated glass, maximum allowable span shall be determined in accordance with **6.3.5**. For 3 mm monolithic annealed glass, the maximum area shall not exceed 0.85 m^2.

The minimum thickness of the nominal glass size shall be as per the accepted practice in accordance with Indian Standard specifications.

For laminated glass composites, the combined minimum thickness of the glass sheets may be used excluding the interlayer thickness. Alternatively, reference to specialist literature may be drawn for the same purpose.

6.3.2 *Rectangular Glass Supported on All Four Edges*

For rectangular glass supported on all four edges, the maximum area for the design wind pressure shall be determined using the corresponding tables provided for each type of glass. Linear interpolation may be used for any value in between those given therein while maintaining the aspect ratio.

6.3.3 *Rectangles of Glass Supported on Two Opposite Edges*

For rectangles of glass supported on two opposite edges, the maximum glass area for the design wind

pressure shall be determined from Tables 22 to 25 for ordinary annealed, laminated, heat-strengthened and toughened glass, respectively.

6.3.4 *Rectangles of Glass Supported on Three Edges*

For rectangles of glass supported on three edges, the maximum glass area shall be determined as for two-edge support spanning along the unsupported edge. Alternatively, basic engineering principles shall be adopted in determining the glass thickness for all applications where only three edges of the panel are supported.

NOTE — Butt glazing of adjacent panels in the same plane should not be considered as a support.

6.3.5 *Heat-Strengthened Laminated and Toughened Laminated Glass*

For heat-strengthened laminated and toughened laminated glass, the maximum span for a given standard nominal thickness for a given panel size shall be determined from Tables 23 and 27, and Tables 20 and 25, respectively, with the design wind pressure being divided by the appropriate glass type factor, P_f (*see* Table 15), as applicable for the relevant support conditions.

6.3.6 *Serviceability Checks*

6.3.6.1 Glass complying to Tables 19 to 27 are deemed to meet, the serviceability deflection limits specified (in the absence of any other specified values) or the following values may be had for guidance.

6.3.6.2 *Maximum allowable deflection of framing members*

a) *For mullions*:
   1) *Single height glazing* — Span/175 or 19 mm, whichever is less.
   2) *Double height glazing* — For spans up to 4 110 mm, same as single height glazing; and for spans above 4 110 mm, the same shall be (Span/240) + 6.35 mm.

b) *For transoms*:
   1) Span/500 or 3 mm, whichever is the least for dead load.
   2) Span/175 or 19 mm, whichever is the least for wind load.

c) *Deflection at the centre of the glass*:
   1) *Monolithic glass* — Shortest span/60 or 19 mm, whichever is the least.
   2) *Double glazed unit* — Shortest span/90 or 19 mm, whichever is the least.

d) *Deflection at edge of the glass*:
   Shall be limited to 15 mm.

6.3.6.2.1 *Dielectric separation of dissimilar metals*

When the framing member for the glazing is aluminium and reinforcement is required to meet the deflection criteria, the reinforcement may be of aluminium or galvanized steel (red oxide coating being not recommended) with an insulating material between them at contact points. It is recommended to choose materials as close to each other in the galvanic series as possible.

6.3.7 *Ultimate Stresses*

The ultimate stresses for various types of glass are given in Table 28.

Table 28 Ultimate Limit State Design Stresses for Glass Subjected to Wind Loading

(*Clause* 6.3.7)

Sl No.	Glass Type	Standard Nominal Thickness '*T*' mm	Ultimate Limit State Design Stress at Given Location: Away from Edge MPa	Ultimate Limit State Design Stress at Given Location: At Edge MPa
(1)	(2)	(3)	(4)	(5)
i)	Annealed	3	41.00	32.8
		4	38.99	31.19
		5	37.45	29.96
		6	36.2	28.96
		8	34.33	27.46
		10	32.8	26.24
		12	31.57	25.25
		15	30.15	24.12
		19	28.72	22.98
		25	26.96	21.57
ii)	Toughened	4	97.47	77.97
		5	93.61	74.97
		6	90.49	72.39
		8	85.82	68.65
		10	82.01	65.61
		12	78.91	63.13
		15	75.37	60.3
		19	71.81	57.45
		25	67.41	53.93
iii)	Heat strengthened	3	65.6	52.48
		4	62.38	49.9
		5	59.91	47.93
		6	57.91	46.33
		8	54.92	43.94
		10	52.48	41.99
		12	50.51	40.4
iv)	Annealed laminated	5	37.73	30.18
		6	36.43	29.14
		8	34.41	27.53
		10	32.87	26.3
		12	31.62	25.3
		16	29.75	23.8
		20	28.23	22.58
		24	26.99	21.59

6.3.8 *Insulating Glass Units*

6.3.8.1 *Determining thickness of structural silicone*

The structural bite requirement is directly proportional to the wind load and the dimension of glass. Higher the wind load and larger the dimensions of the glass are, the greater the amount of structural bite required. The controlling variables which affect the structural bite requirement are the maximum short span dimension of glass and the design wind load which the structural glazing system shall be designed to accommodate.

a) *Structural bite calculation for wind load and glass dimension*

$$\text{Minimum structural bite} = \frac{\text{Glass short span dimension} \times \text{Wind load} \times 0.5}{\text{Maximum allowable design stress}}$$

NOTES

1 Glass' short span dimension (SSD) is the shorter of the two dimensions (in m) of the rectangular glass panel.

2 Wind load is the maximum wind pressure, in Pascal, for a return period of 10 years based on local regulations.

3 The maximum allowable design stress for type of the structural sealant is selected as per manufacturer's recommendations.

b) *Determination of thickness of structural silicone* — With a sealed IGU, there may be load sharing between the two lites (panes) of glass. If so and both panes are of the same thickness, the lateral load (P) is shared almost equally; thus the secondary seal bite is calculated as one half that of the structural sealant bite, but should meet the minimum requirement. If of unequal thickness, the load shared by each pane will vary, depending on the difference in thicknesses. Further details are to be obtained from the manufacturer.

c) *Structural bite calculation for dead load*

$$\text{Minimum bite (m)} = \frac{\text{Weight of glass (kg)}}{\text{Perimeter of the glass (m)} \times \text{Sealant dead load design strength (kg/m}^2\text{)}}$$

$$= \frac{\rho g T A}{P s}$$

ρ = 2 500 kg/m^3 is the specific mass of flat glass corresponding to approximately of specific weight.

g = 9.81 m/s^2

s = Allowable design stress for dead load (DL) for selected sealant considered for design, Pa.

T = thickness of the bite, m.

P = perimeter (if the horizontal frame members do not support the glass or deflect under the dead load of the glass, consider 2 times of its height only).

A = area of glass panel, m^2.

6.3.8.2 *Maximum allowable span for glass and type*

Maximum allowable span is dependent on the thickness of the glass selected and type of glass used (for example anncaled, toughened or heat strengthened glass). The maximum span is calculated in accordance with **6.1.9** (*see* Fig. 14 for details).

6.3.9 *Safety during installation*

Glass and the coating layer (if any) should not be, exposed to/in direct contact, with aggressive materials such as acid, solvent, cement mortar, etc.

The fixing system of the panel should, in no case, cause shear stresses in the panel, and particularly the bonding interface between the glass sheet and the frame, either under the effect of external forces or due to differential expansion of components.

The protection of glass panel by means of a polyethylene sheet is recommended and shall provide ventilation for the glass in order to prevent thermal breakage.

6.3.10 *Handling and Transportation*

6.3.10.1 *Transportation*

During the transportation of the flat glass (clear, tinted), coated glass (solar control and mirror), lacquered or

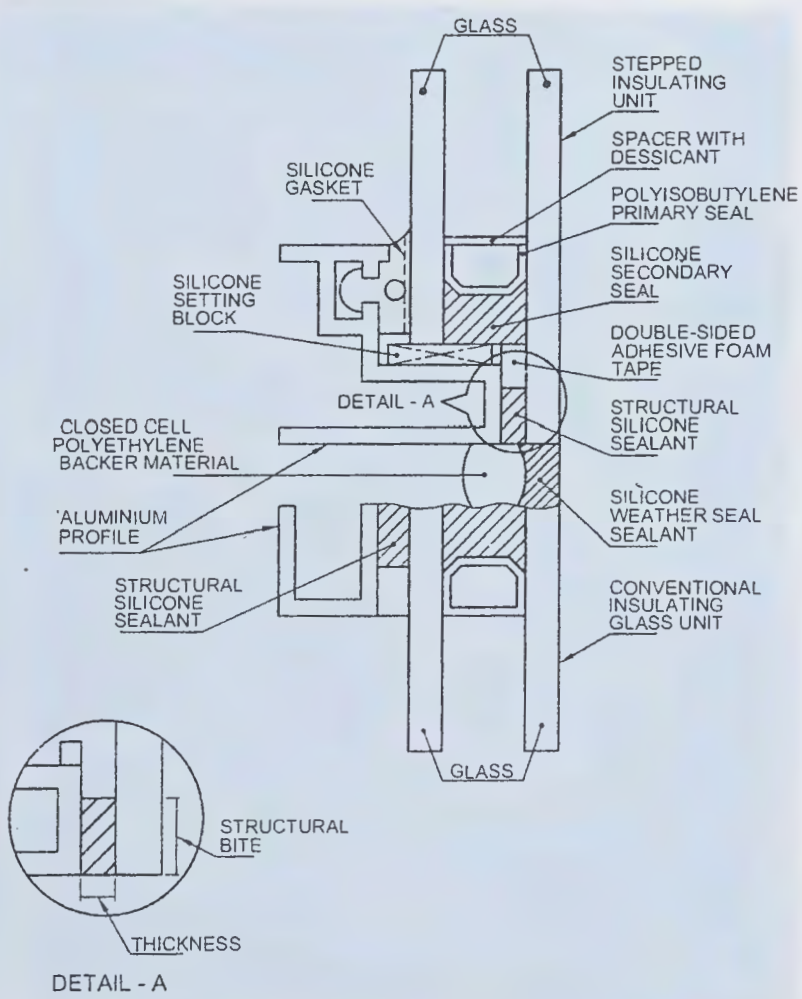

FIG. 14 TYPICAL STRUCTURAL GLAZING DETAIL

painted glass the following methods (if other standard packaging specifications are not available) of storage, packing and interleaving shall be followed:

a) Flat glass shall be transported vertically;
b) Glass panes should not come into direct contact with each other by using appropriate interleaving such as powder or foam or paper. The lacquer opacified/ enamel coated/ screen printed glasses shall be separated by paper or foam; and
c) The packing and packing material shall be protected from water and if the glass is wrapped and sealed, the seal should remain closed until the product is used and precautions taken to not damage the packing while handling with a hoisting apparatus.

6.3.10.2 *Handling*

During the handling of the flat glass (clear, tinted), coated glass (solar control and mirror), lacquered or painted glass, the following guidelines shall be followed:

a) Glass shall be handled with dry, clean gloves, specifically after washing to prevent stain marks on them.
b) Care shall be taken to avoid contact or friction of the coating or the opacified/ enamel/screen printed side with any rough surface or hard objects.
c) A better practice is to handle glass with vacuum cups, and ensure that the vacuum cups and the glass are clean; and
d) It is recommended to keep it clean, if glass sheets are stored again before their processing or installation in the facade.

6.3.11 *Storage at Site*

To prevent staining, the storage area at site shall be,

a) a dry, well ventilated location at a sufficiently constant temperature;
b) protected from rain and running water;
c) protected from wide changes in temperature or humidity;
d) protected from alkaline material;
e) protected from direct contact of aggressive products such as corrosive vapors, acids, etc; and
f) glass panes are stored vertically on a soft surface such as wooden boards/battens.

6.3.12 *Storage after Cutting*

6.3.12.1 While stacking of coated glass/ mirror in the unpacked condition, the glass surface shall be facing towards the front (paint/coating backing towards the back).

6.3.12.2 Direct stacking of the mirror/coated glass one above the other should be prevented and suitable interleaving material as mentioned in **6.3.9** should be used between two glass panes.

6.3.12.3 The support material for glass storage should not have affinity towards moisture absorption.

6.4 Fire Safety

6.4.1 This Section covers the requirement and selection of fire safety glass for buildings. General fire safety provisions for buildings shall be in accordance with Part 4 'Fire and Life Safety' of the Code. It is important for any fire rated glass to provide sufficient amount of human impact safety feature even during fire or in general situations. The level of human impact safety of glass in buildings shall be in accordance with **7**. It is necessary that the fire rated system shall withstand the standard time-temperature curve during a fire test and shall give adequate time to the occupants for safe evacuation. This Section does not deal with the safety and security of people or goods in relation to risks of,

a) vandalism, riots, burglary or break in protection;
b) protection from explosion (terrorist attack);
c) natural disasters like earthquakes, cyclone, etc; and
d) plastic glazing, safety and security glazing, etc.

The requirements given here are minimum fire resistance requirements. In circumstances wherein the requirements of other Indian Standards exceed the requirements of this Section, in such cases the higher requirements shall become applicable.

6.4.2 *Glass for Fire Resistance*

6.4.2.1 Glazing system shall be so constructed, treated, or combined with other materials as to reduce loss of life or property during an event of fire, in comparison with ordinary sheet or flat glass, thereby preventing the passage of flame, hot gases, and smoke.

6.4.2.2 The following are the products in the scope of this Section that may be used for fire resistance in glazing provided they meet the relevant available standards:

a) Wired glass,
b) Annealed fire resistant glass (AFG),
c) Tempered fire resistant glass (TFG),
d) Intumescent laminated fire resistant glass (LFG), and
e) Double glazed fire resistant glass (DFG).

6.4.2.2.1 *Wired glass (Not recommended in doors except as vision panel and for window sizes not greater than in Table 29)*

It is a type of glass into which a wire mesh is embedded during production. Wired glass has an impact resistance similar to that of annealed glass, but in case of breakage, the mesh retains the pieces of glass. Value addition such as tempering and lamination is not possible using wired glass.

6.4.2.2.2 *Annealed fire-resistant glass*

A single piece of fire resistant glass (borosilicate glass) that is tested for fire resistance for the required duration. These types of glasses can be used only in areas where human impact safety is not an issue, typically in areas like vision panels of doors, oven doors, etc. This type of glass has lower coefficient of expansion and cannot be tempered.

6.4.2.2.3 *Tempered fire-resistant glass*

A single piece of specially heat-treated or chemically treated glass that is tested for fire resistance for the required duration and which has a stress pattern such that the piece when fractured reduces to numerous granular fragments, with no large jagged edges. Additionally these glasses should have a impact resistance of highest classification.

6.4.2.2.4 *Intumescent laminated fire resistant glass*

Two or more pieces of glass held together by an interleaving layer or layers of materials and that as a complete system is tested for fire resistance. Fire side of the glass shall crack and break during the fire or under sufficient impact, but the pieces of glass tend to adhere to the inter-layered material and do not allow the fire to penetrate the last layer of glass.

6.4.2.2.5 *Double glazed fire resistant glass*

Fire resistant glass that is used as a double glazed unit has to be tested as a complete Double Glazed Unit (DGU) or other multiple glazed units as the case may be. Double glazed fire resistant glass can be a combination of intumescent laminated fire rated or tempered fire resistant glass. Fire resistant glass cannot be combined with another glass and used as a DGU unless the combined double glazed or multiple glazed units are also tested. Both the panes of the double glazed unit will need to satisfy the required impact safety as mentioned in 7.

NOTE — It should be noted that use of any fire rated glass has to be installed in a tested system. Fire rated glass alone cannot provide the desired fire resistance since the fire resistance of a partition or a door assembly or any glazed building element is a function of the glass, frames, hardware, gaskets and fixings which forms the glazed system.

6.4.2.3 *Testing procedures*

Any fire rated glazed building element needs to be tested as per accepted standard [6-8(10)]. The fire rating criteria of any building element shall be in accordance with Part 4 'Fire and Life Safety' of the Code.

Table 29 Limiting Size of Wired Glass Panel

(*Clause* 6.4.2.2.1)

Sl No.	Opening Fire Protection Rating	Maximum Area	Maximum Height	Maximum Width
	min	m^2	m	m
(1)	(2)	(3)	(4)	(5)
i)	60 to 90	0.064 5	0.838	0.254
ii)	45	0.836	1.372	1.372
iii)	20	No limit	No limit	No limit

6.4.2.4 *Identification of glass used for fire resistance*

a) All glass used for resisting fire shall conform to and preferably certified against available Indian Standards.

b) Since a fire resistant glass is not easily distinguishable from normal types of glass, it is imperative that every fire rated glass panel/ unit should preferably have an indelible mark on all the panels/units of fire resistant glass showing the name of the manufacturer and the name of the product.

c) Rating of the glass panel may also be provided, although the rating of glazing system is of primary concern.

The glass used for fire resistance shall be in accordance with the requirements of Part 4 'Fire and Life Safety' of the Code.

6.4.3 *Precautions*

6.4.3.1 Fire resistant glass alone shall not be enough to protect occupants from fire. Glass is only one component of the complete system.

6.4.3.2 Fire test certificate report conducted for one application shall not be substituted for any other application. For example, a report for a partition shall not be used for a door application although the glass used and the fire ratings are the same. Approval in vertical orientation cannot be considered for acceptance in horizontal or inclined orientation.

6.4.3.3 The maximum glass size as mentioned in the test report should not be exceeded in practice with respect to the bigger linear dimension or area, unless otherwise validated by an assessment report issued by the testing lab. The aspect ratio may be modified provided that none of the linear sides has a dimension greater than that of the largest dimension of originally tested glass.

6.4.3.4 The dimensions of the profile need to be the same as that tested.

6.4.3.5 In case of any change in hardware they should be replaced following the guidelines laid down in the standard against which the test was conducted.

6.4.3.6 Factors like edge cover, types of gaskets and type of fixtures also play a very vital role in achieving the fire performance of the building element. These have to be used and installed as per the test report/ available standards.

7 SAFETY RELATED TO HUMAN IMPACT

7.1 General

The provisions herein are limited to the behaviour of glass when subjected to various kinds of human impact, precautions against risk of fall and falling glass. Conditions outside of 'human impact' are not covered under the scope of this Section.

This Section does not assume that the glass used in accordance to this Section will not be broken under all human impact conditions, rather,

a) it will not be broken under most likely forms of human impact; and
b) even if it breaks, the likelihood of cutting or piercing injuries will be minimised by virtue of the protection given to the glass, or by the limited size, or by the fracture characteristics of the glass.

Further, this Section does not deal with the safety and security of people or goods in relation to risks of,

1) vandalism, riots, burglary or break in protection;
2) fire arm protection;
3) protection from explosion (terrorist attack);
4) natural disasters like earthquakes, cyclone, fire, etc; and
5) plastic glazing material, safety and security glazing, etc.

In circumstances wherein the requirements of any referred standard(s) exceeds the requirements of this Section, in such cases the higher requirement shall become applicable.

The use of this Section shall also be in conformity with all other relevant standards on fire safety, structural stability, natural disasters, safety and security, etc, in force.

7.2 Safety Glass

Glazing material that are constructed, treated, or combined with other materials so as to reduce, in comparison with ordinary sheet/ float/ plate glass, the likelihood of injury to persons by objects from exterior sources or by these safety glasses when they may be cracked or broken.

The following are the products in the scope of this Section that may be used in safety glazing provided they meet the conformity requirements of accepted standard [6-8(5)]. Safety glass according to this Section shall be of following types:

a) Toughened safety (Tempered) glass, and
b) Laminated safety glass.

7.2.1 All heat-treated/heat strengthened glasses, laminated, toughened, coated glasses and annealed glasses are not classified as safety glasses unless laminated to meet the requirement of tests specified in accepted standard [6-8(5)] for safety glass.

7.2.2 In atria where there is no impact loads above 10 m, suitable toughened glass is adequate. *See* **4.2.9,** in case of use of glass fins as a structural member.

7.3 Critical Location

Where any glazing is within 1.5 m above the floor level of a building, it is considered likely to be subjected to human impact and hence, shall comply with the human impact safety requirements of this Section. Safety glazing should also be used,

a) where there is danger of falling infill glass material(s) from overhead glazing;
b) the danger of falling due to a change in floor level; and
c) in case of balustrades, stairs and floors.

Based on typical accidents in glazed buildings, certain locations in buildings are found to be more vulnerable to human impact than others. Some of such critical locations are shown in Fig. 15, where necessary precautions given below should be followed:

1) In-and-around doors, low windows;
2) Door side panels;
3) Panels mistaken for a doorway or opening;

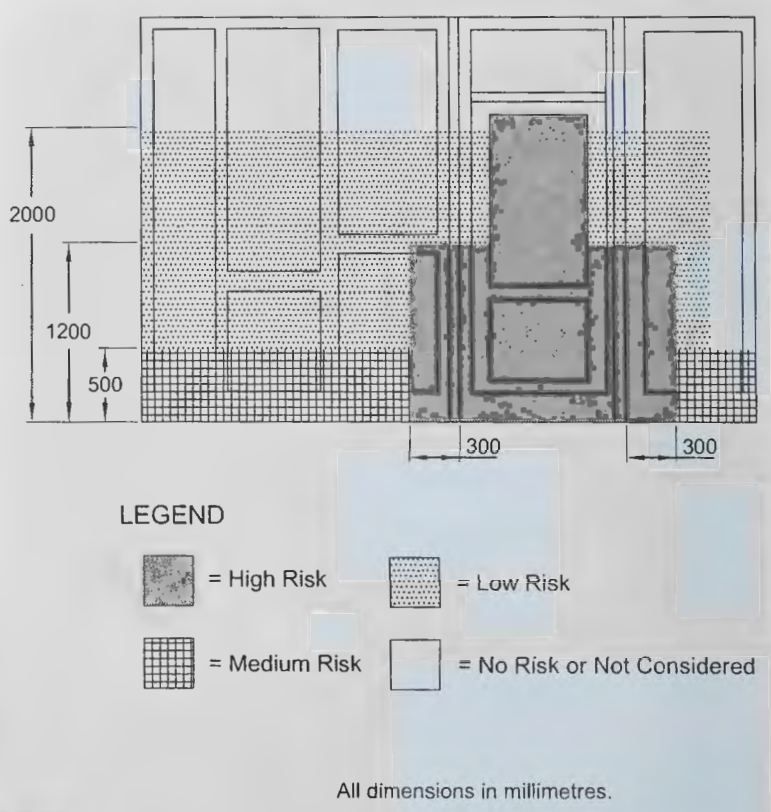

FIG. 15 CRITICAL LOCATIONS

4) Panels at low levels in walls and partitions;

5) Bathrooms;

6) Building associated with special activities, for example, gymnasia, enclosed swimming pools, etc;

7) Schools and child care facilities; and

8) Nursing homes and care facilities for the aged and infirmed.

Suitable precautions should be taken to reduce the injuries that can result from glass breakage by

i) selecting glass of a suitable type, thickness and size;

ii) enhancing a person's awareness of presenc of glass by making glass visible (manifestation of glass); and

iii) minimizing manual handling of large pieces of glass during installation.

Based on the above, a comprehensive Table 30 is provided for information.

Table 30 Type of Glass Suggested for Use at Different Critical Locations/Cases in Buildings

(*Clause* 7.3)

CASE 1	CASE 2	CASE 3	CASE 4	CASE 5
Vertical Walls with Residual Protection or $H_s \geq 0.75$ (not Likely to be Subjected to Human Impact)	**Vertical Walls H_s<0.75m and $H_f \leq 1.5$m (Human Impact but no Risk of Fall)**	**Vertical Walls H_s<0.75m and H_f>1.5m (Human Impact and Risk of Fall)**	**Horizontal or Sloped Glazing Glass (Risk of Fall)**	**Glass Acting as a Balustrade/ Railing (Human Impact and Risk of Fall)**
(1)	(2)	(3)	(4)	(5)
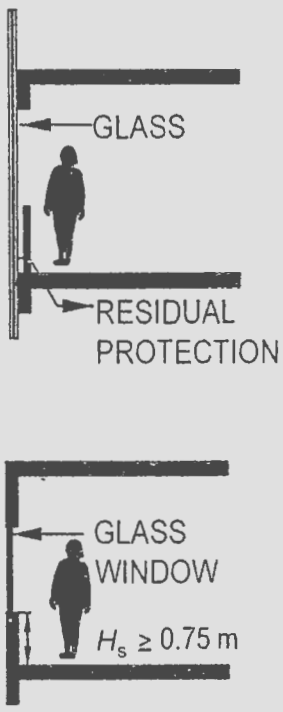	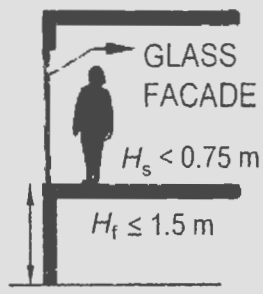	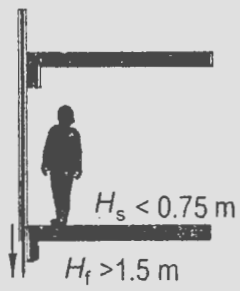 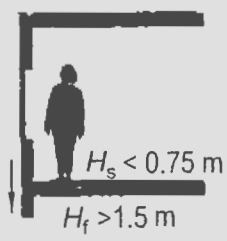	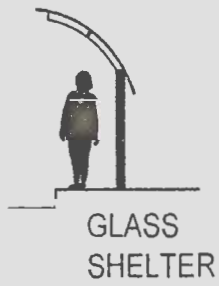	
Type of glass	Any glass[1]	Safety glass	Safety glass[2]	Laminated safety glass	Laminated safety glass
Examples	Residual protection is the safeguard provided to avoid the impact of human being on glass. It is provided on the side of the glass where there are chances of human impact. It can be achieved by providing protection in the form of a sill structure or transom, chair rail or grill work inside	a) Doors b) Side panels c) Curtain walls d) Glazed area e) Doors in bathroom 1) Fully framed 2) Partially framed 3) Frameless f) Façade g) Windows h) Internal partitions and doors j) External facade and doors on ground floor, above floor with terrace outside.	a) Curtain walls b) Façade c) Spandrels d) High activity area e) High risk area f) To avoid risk	a) Roof (Skylights) b) Ceilings c) Bus shelters d) Floors e) Stairs f) Sloped facade	a) Balustrades b) Balcony c) Railings

[1] Safety glass is not mandatory.

[2] Laminated float glass is preferred.

Table 30 — (*Concluded*)

NOTES

1 'H_f' corresponds to height of fall of human being or glass in case of change in level and 'H_s' corresponds to the sill height with reference to floor height.

2 In case of mirror glazing, it should conform to the requirements of other safety glasses unless it is fully backed by a solid material.

3 In Case 2 and Case 3, if the smaller dimension of the pane is 250 mm or less and its area is 0.5 m^2 or less, glass other than safety glass may be used, provided that its nominal thickness is not less than 6 mm (applicable to vertical glazing).

4 Toughened or laminated safety glass should meet respective test requirements as given in respective Indian Standard specifications.

5 The effective toughened safety glass thickness and/or laminated safety glass configuration shall be determined case by case with regard to,

a) other solicitations (wind load, snow load, dead load, and human load);

b) the overall dimension (length, width of surface);

c) the aspect ratio of the glass; and

d) the glazing fixing type (framing, bolted system, structural system, etc).

6 Precautions against chances of injuries due to broken glass falling on people include:

a) Broken annealed glass falling on people can cause grievous or even fatal injuries; hence it is recommended to use safety glass in locations other than defined in case 1 where the risk of people getting hurt by falling glass is high.

b) Toughened safety (tempered) glass has a safe breakage pattern, as it breaks and disintegrates into small and relatively harmless particles. However, thick toughened glass particles may stay interlocked, and fall as lumps of these multiple particles and can cause a minor or medium injury mainly due to the weight of the cluster.

c) Laminated safety glass shall generally not fall out of fixing. However, where laminated glass with both glasses toughened, used for horizontal or sloped glazing, in case of failure of both toughened glasses, it may crumble as a blanket and fall out of fixing. This factor needs to be considered while designing horizontal and sloped glazing. Further, when the slope is acute, inner pane facing the floor should be laminated; and when the slope is obtuse, the outer pane facing the ground / floor should be laminated and all obtuse angle sloped glazing shall be continuously capped for safety reasons.

d) Any broken glass in any glazing should be removed immediately on breakage.

e) Strength of the glazing system should be such that it has the ability to hold glass in place and prevent it from falling out as a whole.

f) For over-head applications like skylights, canopies for the safety of maintenance workers and people underneath, the broken laminated glass shall be capable of sustaining a load of 100 kg for a minimum duration 30 min.

7 In case of external laminated glass facades, openable portions have to be left at regular distances for fire fighting and smoke exhaust. This portion should be of toughened (safety tempered) glass and clearly indicated by suitable visible marking. *See also* Part 4 'Fire and Life Safety' of the Code.

8 If insulating glass unit (IGU) is used in situations mentioned in this Section, then one of the following shall apply:

a) If IGU is installed in areas subjected to human impact on either side, then both the panes of the unit shall meet the requirements of this Section.

b) In situations where access is restricted to one side of the unit, then only the accessible side should meet the requirements of this Section.

9 Enhance person's awareness of presence of glass by making visible manifestation.

10 For specific provisions relating to smoke evacuation, Part 4 'Fire and Life Safety' of the Code may be referred.

7.4 Manifestation (Making Glass Visible)

7.4.1 Presence of glass in a door, side panel or a panel capable of being mistaken for a doorway or opening, which is not made apparent by transoms, colonial bars, door frames, large door handles, stall or other components of glazing system, should be made apparent by some form of manifestation. Decorative treatment, such as being opaque, or patterned are the other common manifestation options.

The manifestation employed should be of a sufficient size to make it immediately obvious. The manifestation should preferably be permanent, for example etching of the glazing; alternatively, if applied materials are used, they should be durable and not easily removed.

Manifestation shall be in the form of an opaque band in accordance with **B-5.3.13** of Part 3 'Development Control Rules and General Building Requirements' of the Code.

7.4.2 A band or marking may not be required, where any one of the following applies:

a) Width of the glass is not greater than 500 mm at any part (this applies to overall panel assembly — not individual glass pieces as in faceted glazing).

b) Glass is provided with at least one fixed glazing bar, firmly attached to the styles to locate and protect each face of the glass. At least one transom (glazing bar) shall be located with its upper edge not less than 500 mm and its bottom edge not more than 1 000 mm above the floor level. The glazing bar shall have a face of width 40 ± 3 mm; and

c) Alternatively, patterns may be used as an acceptable form of marking provided it meets the other criteria in this Section.

7.5 Identification

All safety glasses shall be procured from certified manufacturers and the product shall conform to relevant Indian Standards and shall carry all relevant information through the approved label/permanent (indelible) markings on the glass surface.

7.6 Test Requirements

7.6.1 Safety glass shall conform to all the requirements when tested as per the test methods mentioned in the relevant Indian Standards or as listed in Table 31.

7.6.2 *Mechanical Strength*

The required mechanical strength values (*see* Table 32) apply to quasi-static loading over a short time like wind loading relate to 5 percent probability of breakage at the lower limit and 95 percent confidence intervals.

Table 31 Test Requirement

(*Clause* 7.6.1)

Sl No.	Requirements	Laminated Safety Glass	Toughened Safety Glass	Test Requirement as per
(1)	(2)	(3)	(4)	(5)
i)	Impact/ Resistance to shock	YES	YES	Accepted Standard [6-8(5)]
ii)	Fragmentation test	—	YES	
iii)	Warp test	—	YES	
iv)	Boil test	YES	—	
v)	Fracture and Adhesion test	YES	—	
vi)	Light stability test	YES	—	
vii)	UV light test	YES (for glass used in the exterior portions and subject to natural light)	—	
viii)	Shot bag impact test	YES	YES	*see* Annex E

NOTES

1 Bake test (high temperature) and humidity test may also be carried out as an option to determine the characteristics of laminated safety glass.

2 Surface compression test, four point bending test and waviness may also be carried out to determine such characteristics.

Table 32 Minimum Mechanical Strength Required for Fully Toughened Glass

(*Clause* 7.6.2)

Sl No.	Type of Glass	Mechanical Strength N/mm²
(1)	(2)	(3)
i)	Float (Clear/ Tinted/ Coated/ Mirror)	120
ii)	Enameled flat (Based on enamelled surface in tension)	75
iii)	Patterned glass	90

If the glass satisfy the relevant impact test performance requirements (or fragmentation test for toughened glass), in addition to all other appropriate tests mentioned in available Indian Standards or as listed in Table 32, these materials can be classified as safety glass.

8 GLAZING SYSTEM

8.1 The provisions relating to glazing system are covered hereunder. The details and procedure for selection, design, fabrication, installation, testing and maintenance of glazing system and its materials, considering the performance factors, including structural, seismic, acoustic insulation, fire resistance and energy efficiency are covered here under.

8.2 Design and Selection

This performance criteria and parameters for the design and selection of a glazing system and the components involved, along with its associated materials used in buildings are listed below.

8.2.1 *Performance Criteria*

The performance criteria to be satisfied by the glazing system are:

a) Structural stability and safety,

b) Energy efficiency (performance),

c) Visual comfort (light transmittance and reflection),

d) Fire protection (ability to resist/withstand fire),

e) Sound insulation,

f) Air infiltration (wind pressure, stack pressure, fan pressure), and

g) Water penetration (static, dynamic and cyclic pressures).

See Annex F for general guidance on the above.

8.2.2 *Design Parameters*

To achieve the performance criteria, care should be taken so that components in the system are selected and designed for the following parameters, such that the necessary performance criteria is met both individually and as a system

a) Loading,

b) Deflections and allowable stress.

c) Movements,

d) Impact resistance,

e) Acoustic and sound insulation, and

f) Energy performance.

8.2.2.1 *Loading*

Wind load, live load, dead load, load combinations as per good practice [6-8(11)], seismic load as per

good practice [6-8(8)], and other consequential loading may be considered.

8.2.2.2 *Deflections and allowable stress*

The deflection of framing members, members supporting brittle materials, metal panels, glass panels and the allowable stress shall be in accordance with **6.3.6.2**. The allowable stress shall be in accordance with [6-8(11)].

8.2.2.3 *Movements*

The glazing system (and its framing elements) shall be able to accommodate the movements caused due to wind loads, seismic loads, live loads, dead load deflection, thermal expansion and contraction of members, and slab deflection, etc.

8.2.2.4 *Impact resistance*

Any glazing (in the glazing system) within 1 500 mm above the floor level of a building is considered likely to be subjected to human impact and hence, shall comply with the human impact safety requirements given in **7**.

8.2.2.5 *Acoustics and sound insulation*

The recommendations on acoustics and sound insulation given in Part 8 'Building Services, Section 4 Acoustics, Sound Insulation and Noise Control' of the Code shall be applicable.

8.2.2.6 *Energy performance*

The recommendations on the principal energy performance characteristics of the glazing system shall meet the provisions given in **5**.

The primary characteristics required in general are reducing thermal losses and solar gains. For additional reference to visible light transmittance (VLT), solar heat gain coefficient (SHGC) and thermal transmittance (U factor) features, Part 11 'Approach to Sustainability' of the Code shall be referred.

8.2.3 *Types of Structural Frame Materials*

For the framed/semi-framed systems, materials such as aluminium, stainless steel, uPVC and timber, which are commonly employed are listed hereunder.

8.2.3.1 *Aluminium alloy*

Extruded aluminium alloy used for structural framing members, shall be fabricated from the most appropriate grade of alloy complying with the relevant standard(s). The thickness of the aluminium sections should be in accordance with structural and hardware fastening requirements and shall be capable enough to meet the design requirements and satisfy the performance requirements.

Such extrusions in framing members and trims shall preferably be extruded aluminium grade 6063-T5, 6063-T6, 6060-T66, similar or stronger. Where 6063-T5 is to be used in shaped structures, supporting structural calculations particularly the stress criteria be ensured. Extrusion alloy 6061 or 6105 are commonly used for higher strength. Aluminium brackets shall be extruded aluminium grade 6061-T6 or approved equivalent. All aluminium alloys used as extruded rods/ bars, tubes and profiles shall be compliant with accepted standard [6-8(12)].

Sheets and plates may be obtained from the following alloys of aluminium which also lists their primary characteristics:

a) 1100 — A low strength alloy suitable for applications requiring a high degree of formability.
b) 1135 — Brighter finish when anodized.
c) 3003 — General purpose sheet alloy with fair mechanical properties and excellent formability, susceptible to structural streaking when anodized (noticeable in large flat areas).
d) 5005 — Excellent workability, weldability and corrosion resistance.
e) 5052 — Slightly better mechanical properties and excellent corrosion resistance and weldability.

Other alloys can be used provided that they meet the required physical properties and the specified performance requirements.

8.2.3.2 *Stainless steel*

Mullions, panels, fascia, column covers, windows, doors, trim, roofing, gutters, flashing, hardware and other items where minimum maintenance is anticipated, shall be of austenitic stainless steels of Type 301, 302 and 304 complying with accepted standard [6-8(13)] and employed for their mechanical properties as they are highly corrosion resistant for all normal exposures.

For interior decorative applications, where regular maintenance will be provided, Type 430 may be used as it has lesser corrosion resistance properties. For external applications like in coastal regions where maximum resistance to corrosion is required, stainless steel shall be of Type 316. Particular attention shall be paid to the direction of the rolling grain on self-finished stainless steel components where the finish is aesthetically important. All screws, nuts, bolts, washers, self-tapping screws and other fastenings, including those used for the hardware, shall be of stainless steel Type 304, 316, 430 complying with accepted standard [6-8(13)]. Type 316 based steel fasteners, etc, shall be preferable when they are used in coastal regions on the exposed side.

8.2.3.3 *uPVC*

A relatively flexible material, PVC which is internally reinforced with steel or aluminium to give it the required strength and stiffness may also be used. The inherent ability to make a variety of profiles, easier maintenance, corrosion resistance ability and heat resistance when used may be considered when choosing uPVC sections.

8.2.3.4 *Timber*

Timber frames are relatively stiff and particularly treated timber combined with good design and workmanship give an acceptable life. They are adopted for their inherent thermal insulation property, light weight and improved sound insulation. Tenderness to absorb moisture, if not carefully treated prior to use can lead to possible rotting or even warping resulting in air and water infiltration and regular painting and maintenance are the factors to be considered while choosing timber as the framing material.

8.2.4 *Surface Finishes*

The commonly employed surface finishes are listed hereunder:

a) *Aluminium frame* — The main types of aluminium frame coatings are as follows:
   1) Anodized finish,
   2) Powder paint finish, and
   3) PVDF coating.

b) *Steel frames* — Surface finish on stainless steel frames plays a major role in its resistance to corrosion and hence it is an important design aspect to be clearly specified. The types of surface finishes listed here shall be in accordance with applicable relevant standards:
   1) Mill,
   2) Ground,
   3) Brushed,
   4) Polished,
   5) Bead blasted,
   6) Electro polished,
   7) Coloured, and
   8) Patterned.

   Electro polishing of steel frames shall be done in accordance with available standards.

c) *Timber frames* — The function of finishes on timber is two-fold, first to improve the durability of the frame and second to add to the aesthetics. Unfinished, unprotected timber weathers as a result of gradual changes to its physio-chemical structure brought about by temperature and moisture content variations. The finishes may be of the following types:
   1) *Conventional opaque systems* — Water and solvent borne,
   2) *Natural finishes* — Semi-transparent and opaque, and
   3) Water repellent preservatives, wood primers, undercoats and finishing coats (gloss. semi-gloss, flat and low sheen).

Based on the application, the appropriate type of finish shall be chosen.

8.2.5 *Types of Anchorages*

Anchorages are used primarily to join the mullions and transoms to the beam or slab through an appropriate bracket. The two basic types of anchors commonly used are:

a) *Stud anchors* — Used where the mullions have to be fixed to the face of the beam or slab.

b) *Flush anchors* — Used where the mullions have their start point or termination at a slab/ beam or skirting.

Factors influencing the selection of anchors and to ensure proper performance of the anchor during its service life are:

1) *Diameter* — The following parameters shall be calculated for the selection of the anchor diameter:
   i) Dead load acting on the anchor,
   ii) Live load incident to the anchor (wind load- tensile or shear), and
   iii) Weight of bracket, aluminium channels and other associated components.

2) *Length* — The length of the anchor is primarily based on the thickness of the glazing components which have to be fastened to the base material. Insufficient length shall lead to pull out failure.

3) *Material* — Stainless steel and galvanized iron are the two main types of materials used in the manufacturing of anchors.

4) *Coating* — The following type of coating shall be used based on the specific environmental condition met with:

Environmental Condition	*Coating to be Used*
Particular influence of moisture	Zinc plated
Occasional exposure to condensation and in coastal areas/slightly corrosive	Hot-dip galvanized
Heavy condensation/ corrosion and in coastal areas	Stainless steel

5) *Load direction* — Based on the orientation of the anchor, they are incident to shear loading, tensile loading and combined loading of force and hence the proper diameter and depth of anchorage shall be selected.

6) *Base material* — The material characteristic of the base material also plays a major role in avoiding failure in the anchorage. The material shall be of suitable grade, have minimum thickness, shall be properly cured and have the necessary compressive stress.

7) *Anchor spacing and edge distance* — Anchor spacing is the minimum distance between two anchor centre lines without an influence on the tensile or shear failure load of either anchor. The load bearing capacity of an anchor is influenced by an adjacent anchor and thus the minimum anchor spacing specified by the manufacturer shall be adhered. Due to reduced material volume, a minimum edge distance shall be maintained to prevent the edge from breaking away prematurely when the anchor is installed, and also to achieve the full load bearing capacity of the anchor.

8) *Embedment depth* — A critical factor in determining load capacity. Anchors installed less than minimum depth will stress the base material above its limits and may cause failure during installation or expansion of the anchor.

9) *Environmental condition* — Environmental conditions like temperature, humidity, salinity, etc, will affect the performance of the anchors and may lead to premature failure. Hence, careful selection of the material and coating should be done when selecting anchors which are to be installed in location subjected to adverse environmental impact such as coastal region.

8.2.6 *Hardware Materials*

The material, geometry and finish of all the hardware materials shall be as per the requirement and should not affect the performance of the glazing system. All materials and finishes shall be as per relevant Indian Standards and tested before installing into the system in accordance to relevant Indian Standards.

8.3 Fabrication

8.3.1 *Factory*

The manufacturer shall ensure that proper internal control, documentation including records of test results performed be maintained about the production. The above shall enable quality assurance of the materials and process involved.

8.3.2 *Handling of Materials on Site*

The following lists among others, the important features to be considered:

a) All materials shall be handled by workers who have been provided appropriate training and awareness on the techniques to handle the materials and shall operate with a full set of PPE (Personal Protection Equipment).

b) Large glass panes or panels shall be handled with vacuum cups. Care shall be taken to ensure that the vacuum cups and the glass are perfectly clean.

c) All materials shall be handled with dry, clean, gloves and shall not come in contact with rough surfaces or hard objects, in order to avoid scratches, dents or breakage.

d) Labels and marking shall not be put on the coated side of glass, and any relative movement of the coating with the next glass pane shall be avoided.

8.3.3 *Transportation and Logistics*

While transporting materials from vendor to factory, within the factory, to and from surface finish coater, finished goods to site and movement of finished goods at site care should be taken to ensure the following:

a) Finished surface is adequately protected with a protective tape which can be easily removed without leaving any residue.

NOTE — Most protective tapes either peel off or adhere to the substrate when exposed to UV for more than three months.

b) Suitable blocking, edge protection, crating, etc, are done to avoid dents and gouges.

c) Hardware is secured and not damaged in transit.

d) Material is adequately secured in the truck/ container especially when the goods are sent as loose container load (LCL) or partial shipment avoiding any damages.

e) Lifting equipment's shall be adequately engineered for capacity, safety and balance (especially when units are very heavy).

f) Suitable 'A' frames or customized transport support shall be used.

g) Recommendations from glass supplier towards the protective film shall be followed.

8.4 Installation

8.4.1 *Site Survey of Building*

a) Measuring the elevation width and height, ascertaining the grid pattern including position of vision and spandrel frames, the levels of concrete and masonry in x, y and z axis, checking and recording the presence of any difference in plumbness of jambs, beam and column fascia and steel structures are the key activities necessary in deciding the final fabrication measurements.

b) Levelling (setting x-axis, common sill level for all elevation and adjustment in bracket depth) and surveying (measuring x-axis distance and setting the width and height for all elevation) are involved in the process of site survey of building. The key processes are listed below:

1) *Processes in levelling:*

i) The sill bottom level of all the glazing elevations is to be checked by fixing a common benchmark and the reading should be recorded at minimum one metre distance.

ii) After taking the reading we can locate the highest and lowest point and then we can decide upon common level of all glazing elevations.

iii) The benchmark shall be a permanent mark, hence we shall be using oil paint mark in form of upside triangle

iv) The levels of all beam bottoms and up stand, if any, coming across the glazing elevations at all floors are to be measured.

v) Any other point that can affect fabrication drawings to be noted.

2) *Processes in surveying:*

i) The total width shall be measured using a theodolite and recorded at one plane.

ii) It shall be cross checked by measuring existing column to column (at other plan) distance.

iii) The two end point RCC shall be measured for plumbness. If any difference is observed, adjust the reading of first two steps.

8.4.2 *Installation Tolerance*

The effect of installation tolerance is vital for any type of glazed system to perform as per the requirement and the specified performance. For structural glazing, the installation tolerances shall be strictly followed in order to assure that the sealant joint opening meets the specified minimum and maximum joint opening dimensions.

8.4.3 *Good Installation Practices*

The good practices involved in installing a glazing system have been categorized hereunder.

8.4.3.1 *Anchorage*

a) Anchor installation shall be carried out by appropriately qualified personnel and under the supervision of the person responsible for technical matters of the site.

b) Installation shall be in accordance with the manufacturer's specifications and drawings using the tools indicated in the technical documents.

c) Use of the anchor shall be only as per that supplied by the manufacturer and without changing/exchanging the components of an anchor.

d) Checks before placing the anchor to ensure that the strength class of the concrete in which the anchor is to be placed is in the range given and is not lower than that of the concrete to which the characteristic loads apply.

e) Edge distance and spacing shall be not less than the specified values without minus tolerances.

8.4.3.2 *Sub-structures*

a) In order to avoid physical contact with the panels and frames during sealant application, which might cause adhesion loss, use of powder-free latex gloves shall be used, during panel placement.

b) Proper alignment and setting out of the sub-frame is critical in ensuring the ease of operation of the window/door.

c) Anchor/bolt heads and joints between external wall and sub-frame should be sealed with sealant for effective water tightness.

d) Prior to fixing the main frame, the sub-frame should be checked for any physical damages and any damaged sub-frame should be repaired or replaced.

e) Setting out of the sub-frame should also be verified before the installation of the main frame.

f) Dust and debris accumulated in the sub-frame could affect the alignment and fixing of the main frame and may also cause blockage to the weep holes, resulting in overflow of any

incidental water into the interior, and so it shall be properly cleaned before assembly.

8.4.3.3 *Sealants*

a) All components (glass and framing member such as aluminium) receiving the structural glazing silicone sealant shall be wiped thoroughly with a clean cloth dampened with a cleaner recommended by the manufacturer, and immediately followed by a dry wipe, using clean cloth.

b) All surfaces once cleaned/primed shall be handled carefully so as not to contaminate the surface.

c) The substrates shall be kept free from moisture, condensation, dust and other impurities.

d) An application temperature range of +10°C to +40°C (or as specified by the manufacturer) is recommended and shall be adhered to.

e) Substrate temperatures in excess of +50°C will adversely affect curing process and also the adhesion of the sealant to the substrate.

f) Minimal time shall be taken for cleaning, placement and sealing of panels since environment conditions at job site cannot be controlled.

g) Temporary fasteners may be used to keep the joints stable during the curing process of the sealants and they shall be removed only after complete cure and adhesion has been achieved by the sealant.

h) Tooling of the sealant shall be done with light pressure, within 5 to 10 min, before a skin forms on the sealant.

j) Avoid the use of wet tooling aids such as soaps and solvents. Dry tooling is appropriate.

k) Masking tape shall be used in ensuring neat straight-line application and avoiding smears.

m) The masking tape shall be removed immediately after tooling has taken place and before the sealant starts to cure.

n) The general recommendation for the application of structural sealant required for a 4 sided system, bonding the glass to the aluminium frame should be done in a factory atmosphere.

p) Complete quality control process with respect to surface preparation, storage, sealant application and quality check are to be implemented in the factory with full traceability. In most cases sealant manufacturers have quality requirements and documentation process related to warranties which need to be followed.

q) *In-situ* application may be required for 2 sided system, retrofit, repair and small areas in a façade. Sealant manufacturers should be contacted to get job specific recommendation on sealant application for *in-situ* application.

8.4.3.4 *Installation*

The framing and fixing system of the panel should, in no case, cause shear stresses in the panel, either under the impact of external forces or due to differential expansion of components. The following shall be taken care of:

a) All framing shall be checked prior to glazing to assure that the opening is square, plumb and secure so that the uniform sealant bite, face and edge clearances are maintained.

b) Inspect all butt and mitre joints and if found open, they shall be sealed using sealants prior to glazing.

c) Minimum edge clearances shall be maintained between glass and sash, as mentioned by the manufacturer.

d) Setting blocks shall be used to support the glass unit which shall prevent the addition of stress applied on the structural tensile bead due to the self-weight of glass.

e) Adhesion tests shall be performed by the contractor/agency at the beginning and during the installation process.

8.5 Testing

8.5.1 *Laboratory Testing*

The glazing system is subjected to various adverse environmental conditions and impacts during its service life. A properly designed and installed glazing system may be able to resist any major damage to its stability or performance under any condition within its effective life time. The glazing system and its component materials shall be tested for the required parameters and performance.

8.5.2 *Field/On-Site Testing*

Testing of the glazing system as a whole unit in site (the field) subject to loads and effects such as water infiltration, wind (air) infiltration, acoustic insulation, fire insulation, thermal performance, structural performance, etc, may be carried out for specific cases as mutually agreed to between the parties concerned, to ensure homogeneity.

The following performance tests are to be conducted on structural glazing system, if area of structural glazing exceeds 2 500 m^2 from the certified laboratories, as per the specialist literature:

a) Performance Laboratory Test for Air Leakage Test (–50 Pa to –300 Pa) and (+50 Pa to +300 Pa) for a range of testing limit 1 to 200 mVh.

b) Static Water Penetration Test (50 Pa to 1 500 Pa) for a range up to 2 000 ml.

c) Dynamic Water Penetration (50 Pa to 1 500 Pa) for a range up to 2 000 ml.

d) Structural Performance Deflection and deformation by static air pressure test (1.5 times design wind pressure without any failure) for a range up to 50 mm.

e) Seismic Movement Test (up to 30 mm).

8.6 Maintenance and Durability

8.6.1 *Maintenance Infrastructure*

Regular maintenance of the building facades plays an important role in the holistic building maintenance. The access systems shall provide sufficient approach which enables all parts of the façade to be reached safely for the purpose of cleaning, inspection and maintenance and also offer high work efficiency to the maintenance workers, without also hindering the aesthetics of the building. The provisions of Part 12 'Asset and Facility Management' of the Code may also be referred.

The means of access and supporting infrastructure should be established at the design stage so that the loads are properly envisaged for.

Façade access requirements come in many varieties and may present challenges. Powered access cradles for facade access, cleaning of the glass directly from the ground, hoists based access and window based cleaning/access from inside the building are some of the common techniques employed. Recently, access techniques using ropes have been used for facade access and are generally considered to be safe, provided the workers have been trained and are using all the correct safety equipment and precautions.

In nearly all cases, façade access and maintenance requires a worker to be exposed to working at height with its associated risks. Therefore, use of height safety equipment, anchor point attachments (like the fall restraint or fall arrest system) and those given below should be employed:

a) *Roof guardrails* — When choosing equipment for working at heights, collective protection like roof guardrails may also be considered. Roof guardrails ensure that all users are protected from falling without the need for specialised training and/or equipment. They also eliminate the need for rescue procedures to be put in place. Roof guardrails are available in fixed, free standing, straight upright, cranked upright or collapsible.

b) *Fall arrest systems and fall prevention cable systems* — Fall arrest systems allow safe access to roof areas for maintenance and inspections to be carried out by workers. Users of the fall arrest systems require wearing of full body harnesses and attachment to the cable/fall arrest system via a lanyard (rope) and shuttle device which allows them to walk the full length of the system without having to detach from the system. Fall arrest systems shall be of types horizontal, overhead, sloping and vertical lifeline type and shall comply to the relevant/available standards.

Depending on the project requirement, the maintenance infrastructure shall consist of the following systems:

1) *Roof trolley/Cradles* — Fixed or adjustable jib, telescopic jib, cradle with pantograph.

2) *Rail systems* — Hooked, anchored, turntables, rotary plates.

3) *Other systems* — Additional winches for glass replacement, parking positions/lifting platforms.

8.6.2 *Maintenance of Materials*

The glazing system and the associated materials require a suitable degree of maintenance, if they are to fulfill their intended working life. Early detection of defects can mitigate expensive repairs or replacement later. The degree of inspection and maintenance required will depend on the type of glazing system and its intended design life.

8.6.3 *Common Practices for Maintenance*

The common principle maintenance practices to be followed shall be as given below:

a) When using the cleaning equipment or carrying out maintenance on the exterior of the building, the risk to personnel and property, prior to the start of work shall be assessed at first.

b) Where applicable, qualified personnel to carry out routine or complex maintenance shall be employed.

c) Power supplies may need to be isolated prior to maintaining electrically operated equipment such as motors to opening vents, roller blinds to atrium roof and main entrance pass doors.

d) While accessing the external façade, fall arrest systems shall always be used even while working in the house cradle.

e) Manufacturer's instructions shall be followed when using cleaning fluids and shall not be mixed up with drinking water or the like. To

deal with instances of contact with eyes, skin, etc, necessary eyewash arrangement and first aid equipment shall be at place.

f) Loosened fixing or bolts shall be identified, reported and attended to immediately, and shall never be tampered with.

g) Unauthorized loosening or removing of the fixings may prove dangerous and can result in structural damage and displacement of the system.

h) When lifting equipment such as hoists and sucker machines are used, it shall be ensured that they are capable of lifting the loads required. Further, the recommended safe working loads of any equipment shall never be exceeded.

j) When handling any insulation of firebreak material, ensure gloves, goggles and masks are worn as fibrous materials (if any) may cause irritation.

k) Prior to the commencement of work involving glues or sealants (particularly in confined spaces), manufacturer's advice/special instructions shall be adhered to before exposing the product to air. Such materials shall preferably be worked with, in a well-ventilated area.

m) In the case of coated glass, the following precautions shall particularly be adhered to:

1) Any scratching will penetrate the surface of the coating and cannot be repaired.

2) Any excessive mechanical treatment might remove the coating in localised areas.

3) Avoid all contact with metal objects.

4) Avoid all chemicals that may attack the surface and damage it irreparably.

ANNEX A

(*Clause* 5.1.1)

MINIMUM PERFORMANCE REQUIREMENT OF GLAZING FOR EXTERIORS

A-1 The panel size design of the exterior glass for the building is done in accordance with this Section considering the effect due to wind load, other imposed load, seismic design. The type of glazing to be installed is determined considering human safety in **7**.

In the determination of the energy and thermal performance of the glazing, the three compliance approaches prescriptive in nature, defines the minimum glazing/glazing system requirement to be met.

The prescriptive values are specified with respect to the geographic climatic zone and glazing area of the building.

A-2 BUILDING FENESTRATIONS

The fenestration shall comply with the maximum glazing area weighted on *U*-value and solar factor as given in Table 34.

The window wall ratio (WWR) is defined by the total fenestration area to the total gross area of the building envelope which is limited to 70 percent. The corresponding minimum visible light transmission is given below. For fenestration area greater than 70 percent, *see* other specialist literature.

WWR	*Minimum Visible Light Transmission* Percent
0 – 0.3	27
0.31 – 0.4	20
0.41 – 0.5	16
0.51 – 0.6	13
0.61 – 0.7	11

Table 34 *U*-Value Requirement for Glazing System

(*Clause* A-2)

Sl No.	Climate	Maximum *U*-Value W/m² K	Maximum SHGC	
			WWR ≤ 40 Percent	40 Percent < WWR ≤ 60 Percent
(1)	(2)	(3)	(4)	(5)
i)	Composite	3.30	0.25	0.20
ii)	Hot and dry	3.30	0.25	0.20
iii)	Warm and humid	3.30	0.25	0.20
iv)	Moderate	6.90	0.40	0.30
v)	Cold	3.30	0.51	0.51

A-3 WEATHER PERFORMANCE

Air infiltration from the fix litres shall be permitted within 1.5 $m^3/h.m^2$ and from operable sash 2 $m^3/h.m$.

Water should be contained in the gutter and drained back to the exterior. Any uncontrolled water in excess of 15 ml or more on the top surface of any exposed interior shall be considered as leakage.

ANNEX B

[*Clause* 5.1.2.4.2(c)]

TEST REQUIREMENTS FOR COATED GLASS

B-1 The coated glass that is used for the exterior building of commercial and non-commercial (residential building) should meet the test requirement listed in this Annex.

B-2 MEASUREMENTS OF PERFORMANCE

The performance factors and spectral details of the coated glass shall be determined using standard accepted spectrophotometer equipment. The actual size shall be dependent on the type of equipment being used for the measurements. The transmittance of the measurement sample shall be measured with radiation of normal incidence at the following wavelengths:

a) 550 nm (representative wavelength for light and solar transmittance); and

b) 900 nm (representative wavelength for solar transmittance).

For glass claiming to have a low emissivity coating, a measurement of the reflectance shall be made at 8 μm using radiation of nearly normal incidence.

B-3 CONDENSATION RESISTANCE TEST

B-3.1 This test consists of subjecting the coated glass to a water saturated atmosphere at constant temperature. The samples have condensation continually forming on them and it is this condensation that may cause surface degradation.

B-3.2 Test apparatus should have a provision of four test pieces and the materials used for the inner walls shall be corrosion-resistant and shall not affect the test pieces.

B-3.3 Procedure

a) The water tank shall be filled with demineralized water, having conductivity lower than 30 μS/cm and a *p*H higher than 5. The internal temperature of the cabinet shall be controlled by means of the reference thermocouple keeping a temperature of the reference glass piece of 40 ± 1.5°C.

b) The test cabinet shall be in a room with an ambient temperature of 23 ± 3°C. Care shall be taken to ensure that draughts, dust, moisture and solar radiation do not interfere with the test cabinet.

c) The reference temperature shall be reached within 2 h of commencing heating. Condensation shall be seen to form on the glass pieces. The test is continued without interruption for the required time. Both the internal reference and the external air temperature shall be regularly checked.

B-3.4 Requirements

a) No defect, greater than 3 mm length.

b) Maximum one defect between 2 mm and 3 mm length.

c) Maximum five defects between 1 mm and 2 mm length.

d) No scratches, staining of the coating or clusters of pinholes greater than 1 mm.

e) When compared with the reference test piece, in both reflection and transmission, there shall be no significant colour change. This observation shall be made within 20 s.

f) The transmittance measured at 550 nm and 900 nm shall differ by no more than ±0.03 from the corresponding measured value on the reference test piece.

B-4 ACID RESISTANCE TEST

B-4.1 This test consists of subjecting the coated glass to a sulphur dioxide saturated atmosphere at constant temperature. The samples shall have condensation continually forming on them. It is this condensation together with the quantity of sulphur dioxide that may cause surface degradation. Test apparatus should have

a provision of four test pieces and the material used for the inner walls shall be corrosion-resistant and shall not affect the test pieces.

B-4.2 Procedure

a) The test cabinet contains 2 litre of demineralized water having conductivity lower than 30 µS/cm When the cabinet is closed 0.2 litre of SO_2 shall be added and the heating system switched on.

b) The test consists of a repetition of 24 h cycles (*see* Fig. 16).

c) Each cycle consists of high temperature plus condensation period and an ambient temperature without condensation period.

d) The temperature shall increase to 40 ± 1.5°C in less than 1.5 h. During the next 6.5 h the test pieces shall be subjected to condensation in the SO_2 atmosphere.

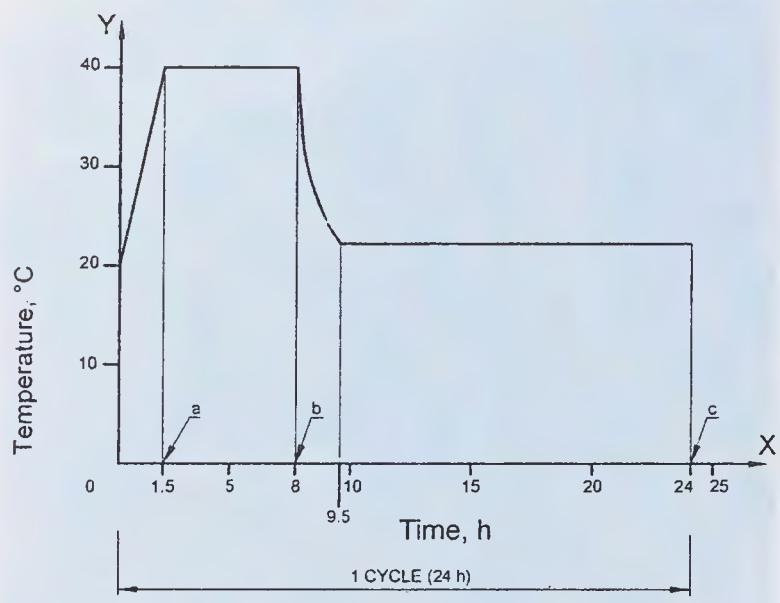

a – Maximum time to reach 40°C
b – Cessation of heating the cabinet and ventilation of the cabinet
c – Solution removal rinsing of cabinet

FIG. 16 24-HOUR CYCLE OF HEATING

B-4.3 Requirement

The transmittance measured at 550 nm and 900 nm shall differ by no more than ±0.03 nm from the corresponding measured value on the reference test piece.

B-5 NEUTRAL SALT SPRAY

B-5.1 This test consists of subjecting the coated glass to neutral, water saline atmosphere at constant temperature. It is the water saline spray that may cause surface degradation.

Test apparatus should have a provision of four test pieces and the material used for the inner walls shall be corrosion-resistant and shall not affect the test pieces.

B-5.2 Procedure

a) The test cabinet shall be prepared and run for a minimum period of 24 h before the test pieces are placed within it. The neutral salt solution is made up by dissolving NaCl, in demineralized water having conductivity lower than 30 µS/cm, to produce a concentration of 50 ± 5 g/l at 25 ± 2°C.

b) The compressed air supplied to the spray nozzle shall be passed through a filter to remove all traces of oil or solid matter and shall be at an absolute pressure of 70 kPa to 170 kPa through a saturator at 40 ± 1.5°C. The spray nozzle shall be made of inert material, with baffles to prevent direct impact of spray on the test pieces.

B-5.3 Requirements

a) No defect, greater than 3 mm length;

b) Maximum one defect between 2 mm and 3 mm length;

c) Maximum five defects between 1 mm and 2 mm length;

d) No scratches, staining of the coating or clusters of pinholes greater than 1 mm;

e) When compared with the reference test piece, in both reflection and transmission, there shall be no significant colour change. This observation shall be made within 20 s; and

f) The transmittance measured at 550 nm and 900 nm shall differ by no more than ± 0.03 nm from the corresponding measured value on the reference test piece.

B-6 ABRASION RESISTANCE TEST

B-6.1 This test consists of subjecting the coated surface of the coated glass to rubbing with a felt pad in dry condition. It is the type of pad, the loading on it and the number of strokes that may cause surface degradation.

B-6.2 Procedure

a) The metal finger shall be approximately 15 mm to 20 mm in diameter and shall be driven so as to produce a frequency of 60 strokes/min + 6 strokes/min alternating forwards and backwards. The stroke length shall be 120 ± 5 mm. The strokes shall be parallel and ensure a constant pressure over the zone to be tested.

b) A circle shape with a diameter of 14.5 ± 0.5 mm.

c) The test sequence shall commence within 30 min of the sample being cleaned.

d) The metal finger containing the felt pad shall be lowered on to the glass surface and a load of 4 N applied perpendicular to the glass surface *via* the felt pad.

B-6.3 Requirements

a) Ensure that the abraded area is uniform.

b) The transmittance measured at 550 nm and 900 nm shall differ by no more than ± 0.03 nm from the corresponding measured value on the reference test piece.

B-7 DURATION OF TESTS

The duration of tests shall be as per the following:

Sl No.	*Test*	*Test Duration for Class*		
		A	B	S
(1)	(2)	(3)	(4)	(5)
i)	Condensation resistance	21 days	4 days	14 days
ii)	Acid resistance	5 cycles	1 cycle	5 cycle
iii)	Neutral salt spray	21 days	10 days	—
iv)	Abrasion resistance	500 stokes	50 stokes	500 stokes

NOTES

1 *Class A* — The coated surface of the glass can be positioned on the outer or the inner face of the building.

2 *Class B* —The coated glass can be used as monolithic glazing but the coated surface shall be on the inner face of the building.

3 *Class S* — The coated surface of the glass can be positioned on the outer or the inner face of the building but these types of coated glasses can only be used in specifically defined applications.

ANNEX C

(*Clause* 6.1.9)

PROCEDURE FOR CALCULATING THE APPROXIMATE DEFLECTION AT CENTRE OF GLASS PANEL

C-1 Maximum glass deflection as a function of plate geometry and load may be calculated using the following:

Deflection, $w = t \,.\, \exp\,(r_0 + r_1 X + r_2 X^2)$

where

$X = \ln\{\ln[q(a.b)^2/Et^4]\}$

$r_0 = 0.553 - 3.83(a/b) + 1.11(a/b)^2 - 0.069(a/b)^3$

$r_1 = -2.29 + 5.53(a/b) - 2.17\,(a/b)^2 + 0.206\,7\,(a/b)^3$

$r_2 = 1.485 - 1.908(a/b) + 0.815(a/b)^2 - 0.082\,2\,(a/b)^3$

where

E = Young's modulus of glass, N/mm^2;

q = net pressure on the pane, N/mm^2;

a = longer dimension, mm;

b = shorter dimension, mm; and

t = thickness of the glass pane calculated.

Example:

Lateral deflection calculation — Determine the maximum lateral deflection (w) of a vertical 1 200 mm × 1 500 mm × 6 mm rectangular glass plate subjected to a uniform lateral load of 1.80 kPa. The actual thickness of the glass is 5.60 mm as determined through direct measurement.

$a = 1\,500$; $b = 1\,200$

$r_0 = -2.689$

$r_1 = 2.011$

$r_2 = 0.213$

$q = 1.80 \times 10^{-3}$ N/mm^2

$E = 71.73 \times 10^3$ N/mm^2

$t = 5.60$

$X = 1.490$

Therefore maximum deflection at the centre of glass is:

$w = 5.6 \text{ x } \exp\,(-2.689 + 2.111 \times 1.490 + 0.213 \times 1.490^2)$

$w = 12.2$ mm

ANNEX D

(*Clause* 6.1.9)

MODEL CALCULATION OF GLASS THICKNESS

D-1 MODEL CALCULATION

D-1.1 Glass panel dimension width 1 200 mm and height 1 800 mm for location Chennai for annealed glass type.

D-1.1.1 *General Checks has to be Done for Safety Performance*

a) The maximum area of glass panel is restricted to 15 m^2.

b) The maximum span of window is restricted to 4 m.

c) Applicable to normal, reflective, laminated, tempered and insulating glass.

d) Applicable to rectangular panels properly fixed.

The procedure for calculating glass thickness is described below:

1) *Step 1* — Calculate aspect ratio (AR_{max}) from Table 16.

Aspect ratio (AR_{max}) = Longer side/shorter side of glass

Aspect ratio = 1 800/1 200 = 1.5

2) *Step 2* — Wind load calculation

$P_z = 0.6\ V_z^2$

$V_z = V_b.k_1.k_2.k_3$

where

V_b = basic wind speed based on location {*see* Fig. 1 of good practice [6-8(7)]}.

k_1 = risk co-efficient factor taken as per good practice [6-8(7)].

k_2 = terrain factor {*see* Table 2 of good practice [6-8(7)]}.

k_3 = topography factor {*see* Table 3 of good practice [6-8(7)]}.

V_z = design wind speed.

P_z = design wind pressure, N/m^2, at height, *h*.

Design wind pressure for Chennai location {Basic wind speed = 50 m/s taken from good practice [6-8(7)]} = 1 750 N/m^2

3) *Step 3* — Strength factor

Based on the types of glass (Laminated/Tempered/Insulating Glass) pressure factor is calculated. To determine the thickness of laminated/tempered/insulating glass, the design wind pressure P_{net} is modified as below:

$P_{net} = P_z/P_f$

where

P_f = pressure factor dependent on the type of glass.

The values of the pressure factor P_f can be taken from Table 2.

For annealed units, $P_f = 1.0$, therefore,

P_{net} = 1 750/1.0 = 1 750 N/m^2

At this stage the glass thickness value shall be calculated from the table and then the deflection and stress check be done as described below:

4) *Deflection check* — The deflection of the glass can be calculated using the formula in Annex C. Actual deflection for the pane shall be obtained as below:

Deflection, $w = t.\ \exp(r_0 + r_1 X + r_2 X^2)$

$X = \ln\{\ln[q(a*b)^2/Et^4]\}$

$r_0 = 0.553 - 3.83(a/b) + 1.11(a/b)^2 - 0.069(a/b)^3$

$r_1 = -2.29 + 5.53(a/b) - 2.17(a/b)^2 + 0.206\ 7(a/b)^3$

$r_2 = 1.485 - 1.908(a/b) + 0.815(a/b)^2 - 0.082\ 2(a/b)^3$

where

E = Young's modulus (71.7 × 10^3 N/mm^2),

q = net pressure on the pane (N/mm^2),

a = longer dimension (mm),

b = shorter dimension (mm), and

T = thickness of the glass pane calculated.

The actual deflection is, 4 mm < 11 mm maximum allowable.

Result: 1 800/175 = 10.3 mm, which is the maximum allowable deflection.

Hence the glass thickness calculated is safe against deflection.

Glass thickness calculation:

$P_{net}.A$ = 200.0 T^k (let $T \leq 6$ mm)

P_{net} = 1 750

A = 2.16 m^2

K = 1.765

T = 5.28 mm, therefore choose the thickness of glass as 6 mm.

ANNEX E

(*Table* 31)

SHOT BAG IMPACT TEST

E-1 OBJECTIVE

The shot bag impact test addresses the capability of glass rails, guards, and balustrades in one, two, three and four sided support systems to continue in their function as a barrier by remaining in the designed framing system after impact or glass breakage.

E-1.1 Glazing Retention

The property of maintaining the glass or glazing material, post breakage, in a system, such that the glass is held in the framing system with no opening sufficient to pass a 75 mm solid steel sphere through the system using a horizontally applied force of 18 N.

E-2 APPARATUS

E-2.1 Instrumentation

Load and time-measuring devices with an accuracy of 62 percent or the full scale shall be incorporated in the test setups. The scale ranges used shall assure that the performance levels are within an accuracy of 65 percent.

E-2.2 Load Attachments

Brackets, fasteners, or other devices used in performing these tests shall be designed and attached so as to minimise their influence on the test results.

E-2.3 Shot Bag, Traction and Release System

The test apparatus shall be capable of supporting a 45.4 kg shot bag and allowing unimpeded swinging of the shot bag from a drop height of 1 220 mm. The impactor system consists of the impactor, traction, release, and suspension devices. The impactor shall consist of the leather bag described in Fig. 17, a commercial punching bag with its bladder left in place,

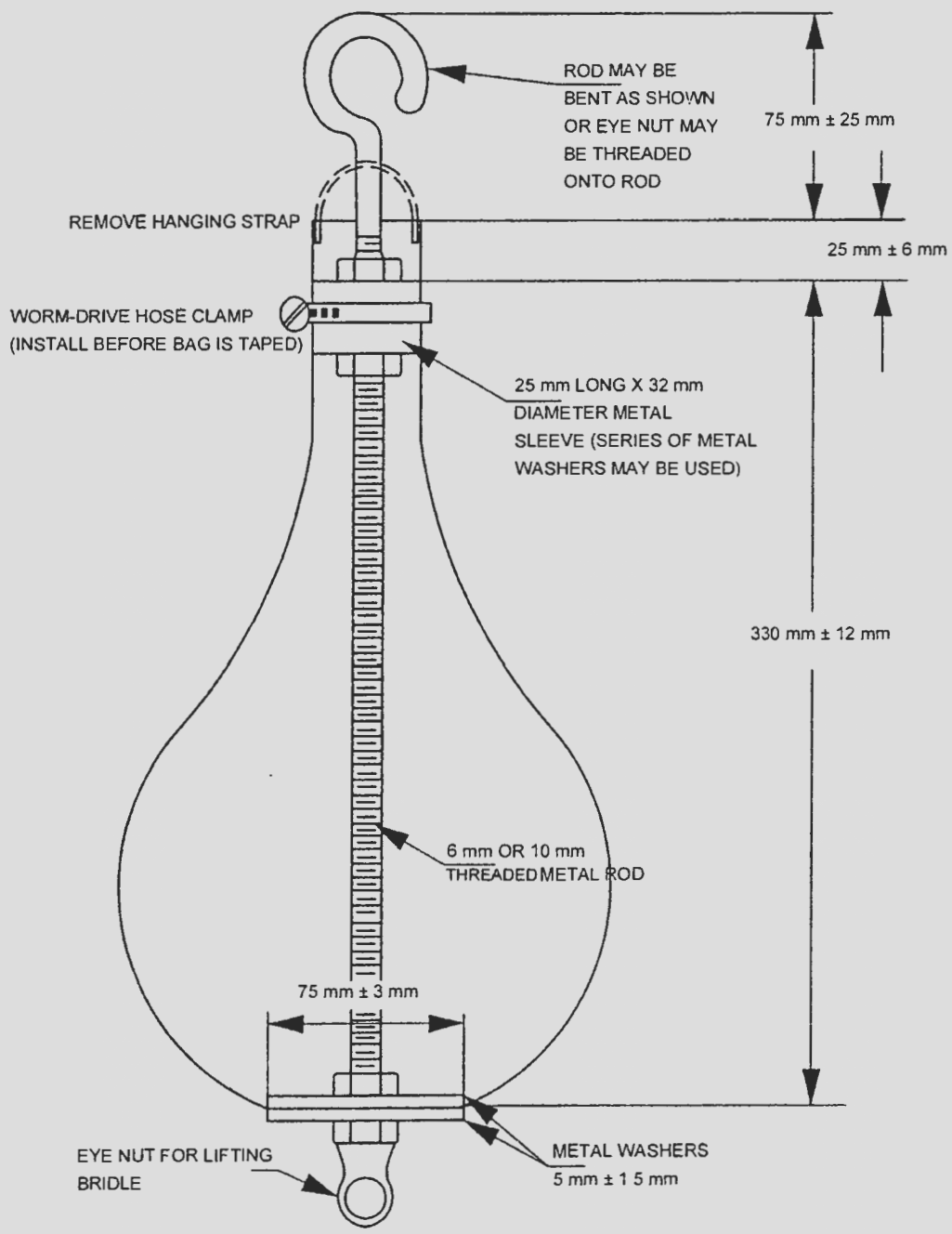

FIG. 17 SHOT BAG IMPACTOR

or any other leather bag of nominally identical shape and size. The bag shall be filled with lead shot of $24^{+0.1}_{0}$ mm diameter and taped. After filling with lead shot, the top shall be either pulled over the metal sleeve and tied with a cord; or twisted around the threaded eyebolt shaft and tied below the metal sleeve, or both. To reduce bag damage during testing, the exterior of the leather bag surface shall be completely covered with glass filament reinforced pressure sensitive polyester adhesive tape, 12 to 15 mm in width and 0.15 mm thick. Tape the entire bag, using three rolls or 165 m total length, and taping in a diagonal overlapping manner. Tape the neck of the bag separately, with additional glass filament reinforced tape of the same kind. The total mass of the impactor assembly shall be $45.4^{+0.1}_{0}$ kg excluding traction system attachments. A traction system shall be used which enables the impactor to be brought into its launch position. The launch position depends on the drop height selected. The traction cable shall be connected to the impactor traction system by a release mechanism, with provisions for rotating the impactor.

E-3 SHOT BAG IMPACT TEST

E-3.1 Procedure

Any protective masking or decorative components shall be removed from the glazing material. To position the impactor at the selected drop height, a traction force shall be applied to raise the impactor such that the axis of the impactor shall be aligned with the suspension cable, with the cable remaining taut. To ensure this, the top and bottom ends of the impactor shall be connected to the release device by a suitable link. To reduce bag deformation during testing, the bag shall be rotated about the axis of its suspension device before each specimen or sample set, by no less than 30°, and by no more than 90°. To reduce bag damage during testing, a thin homogeneous or non-woven plastic film no more than 0.13 mm thick or a loosely draped woven cloth towel weighing no more than 0.005 kPa shall be permitted to be suspended vertically from its top edge directly in front of the surface of the specimen at a distance no more than 10 mm. When at rest the maximum diameter of the impactor shall be located no more than 12 mm from the surface of the specimen and no more than 50 mm from the centre of the specimen. The impactor shall be suspended from an overhead support, located so when at rest, it will, at its maximum diameter, be no more than 12 mm from the surface of the specimens and no more than 50 mm from the centre of the specimen. Raise the impactor to the required height (460 or 1 220 mm) and stabilize it. The suspension device shall be taut and the axes of the impactor and cable shall be aligned. The impactor, stabilized in the launch position in a vertical plane normal to the test specimen, shall be released and falls without initial velocity or axial rotation. One impact with a force of 1.8 kN shall occur on each glazing configuration of the test specimen. Each test specimen shall be inspected after each impact and report condition of specimen.

E-3.2 Reporting of Results

Impact performance shall be classified as: (a) unbroken, (b) broken and retained, or (c) infill broken and not retained (*see* Fig. 18). Retention of the product in the frame is based on the definition of glazing retention given in **E-1.1**.

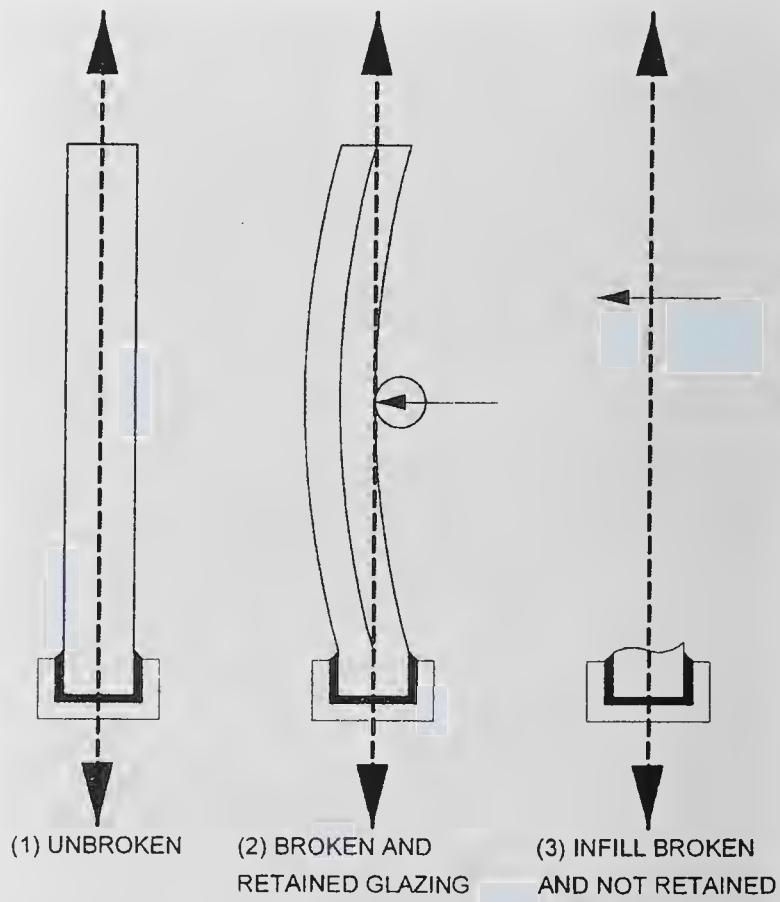

FIG. 18 GLAZING RETENTION

ANNEX F

(*Clause* 8.2.1)

PERFORMANCE TESTS FOR GLAZING SYSTEM

F-1 The following enlists the performance tests for glazing systems. The test specimen size and direction facing the pressurised chamber shall be mutually agreed to between the parties concerned or specifed without ambiguities in the tender documents.

F-2 AIR INFILTRATION/EXFILTRATION TEST

Permissible air leakages shall be 1.5 $m^3/h.m^2$ for fix area and 2 $m^3/h.m$ for crack length of operable panel. The crack length is the maximum height of the shutter per interlock or per meeting stile in a slider or per overlap joint in a double leaf door or vent, in addition to the jambs. Along the width, crack length is the maximum width of the shutter at top and bottom. All operable panels shall be opened and closed 5 times prior to commencement of test.

For facade, strip glazing, skylights and insert vents in facades, the pressure differential shall be ±150 Pa for up to buildings of height 70 m and shall be ±300 Pa for buildings of height beyond 70 m.

For strorefront, operable windows, sliding windows, sliding doors and doors, the pressure differential shall be +150 Pa.

NOTE — Preload of 50 percent of design load for 10 s to be applied before commencement of the test.

F-3 STATIC AND DYNAMIC WATER PENETRATION TEST

If water is observed in the operable vent drainage path and the same is drained through slots after the spray is stopped it shall be considered as pass. Any water on the top surface of any exposed interior shall be considered as leakage. For sliders, only water overflowing to the interior is considered as failure. In case of leakage the remedy needs to be carried out and the retest shall be conducted. The rate of water spray shall be 3.4 litre/min.m^2 for a period of 15 min. The spray shall be located at a distance of 400 mm from the glass and 700 mm centre-to-centre horizontally and vertically. The pressure differential up to 35 m height shall be 300 Pa, beyond 35 m up to 70 m shall be 450 Pa and beyond 70 m shall be 600 Pa.

NOTES

1 Cyclic water penetration is optional and the parameters are to be agreed mutually between the relevant stakeholders. However, cyclic water penetration is not applicable to sliding doors and windows.

2 Between each test, water should be drained and if required 450 Pa pressure applied for a period of 2 min to flush out the water from the system. There should also be a minimum of 10 min at zero pressure between tests.

F-4 STRUCTURAL LOAD TEST (100 PERCENT DESIGN WIND LOAD)

The deflection criteria of glass and framing members shall be as specified in **6.3.6.2**.

No damage or harmful permanent deformation of any parts except sealing materials shall be found at the maximum testing pressure. Residual displacement of structural member shall not exceed span/1 000. The slippage at supports and fixing shall not exceed 1 mm.

F-5 SEISMIC RACKING TEST

Criteria shall be the movement of the sub-structure in the horizontal (+/–) directions. Optional testing for vertical movements (+/–) shall be based on sub-structure movement to accommodate live load, long term creep, column shortening and thermal elongation or contraction. No glass breakage or fall out is allowed. Any damage shall be easily reparable without any part replacements required. No wall component fallout is allowed.

F-6 BUILDING MAINTENANCE UNIT (BMU) PULL OUT TEST (WHEN APPLICABLE)

A tensile load of minimum 1.5 kN shall be applied on the BMU restraint in the following directions:

a) Horizontally to the right and held for a period of 1 min.

b) Horizontally to the left and held for a period of 1 min.

c) Vertically upward and held for a period of 1 min.

d) Vertically downward and held for a period of 1 min.

After each step the BMU restrain should not fail or have permanent deformation.

NOTE — If the load on the BMU restraints required by the BMU supplier is higher, the higher load shall apply.

F-7 OPERATING FORCES TEST (OPTIONAL)

Maximum force required to initiate opening of a sliding door is 180 N and the maximum force to maintain the motion of a sliding door or window is 115 N. For a projected top hung or parallel open vent the maximum force to maintain motion is 135 N.

F-8 STRUCTURAL PROOF LOAD TEST (150 PERCENT DESIGN WIND LOAD AND SEISMIC FORCE, IF APPLICABLE)

Under proof load test there shall be no collapse which means any one or any combination of the following:

a) Dislodgement of any glass.

b) Dislodgement of any frame, panel or any component thereof.

c) Failure of any fixing that connect the façade to the building structure, such that the test sample is unstable.

d) Failure of any stop, locking device, fastener or support which may allow an opening light to come through.

The permanent deformation in framing members in excess of span/1 000 is not permissible and considered as failure.

NOTE — For on-site testing, the parameters shall be tested for two/third of the laboratory values.

ANNEX G

(Foreword)

INSTALLATION OF MIRRORS

G-1 This annex provides general guidelines, which is to be followed during the installation of mirror. Mirrors (Piece of glass silvered on one side, with a protective paint coating) are used in shops, gymnasiums, etc, where it is predominantly used as wall cladding. The mirror panels in such application use large panel size and it is recommended to follow the installation procedure in accordance with this Section.

G-1.1 The mirror should always be mounted on a perfectly flat, clean and dry surface free from acids and aggressive substances such as acid, solvent and cement mortar.

G-1.2 The mirror shall be mounted on wall or plywood and care is taken that the mirror is never stuck over unstable support (painted paper, paint or old plaster). It is recommended that the mirror installation is not done directly on the mirror supports. In order to have good ventilation, the following spacing behind the mirror is recommended depending on the height of the mirror panel:

a) A space of 5 mm for a mirror less than 1 m height.

b) A space of 10 mm for a mirror greater than 1 m height.

Figure 19 gives typical details of the installation of mirrors. During the installation of mirror panels at several levels that is, one above the other, it is recommended to provide a space of 10 mm at the top and at the bottom for circulation of air. The side of the mirror is designed with a minimum 1 or 2 mm of interleaving space. When mirror is fixed in a profile (frame), care is to be taken to maintain perfectly dry and clean frame. It is recommended that mirror is supported on hard non-metallic/plastic wedges of at least 3 mm, to raise the mirror and thus avoid contact with the condensed water which could accumulate in the profile. If the mirror is screwed on, the screws of a suitable dimension is designed, with the interleaving and washers (*see* Fig. 20) made of plastic to avoid any direct glass-metal contact. To minimise the risk of breakage, cracks and splinters during screw-mounting the mirror, it is recommended to use synthetic protective collars.

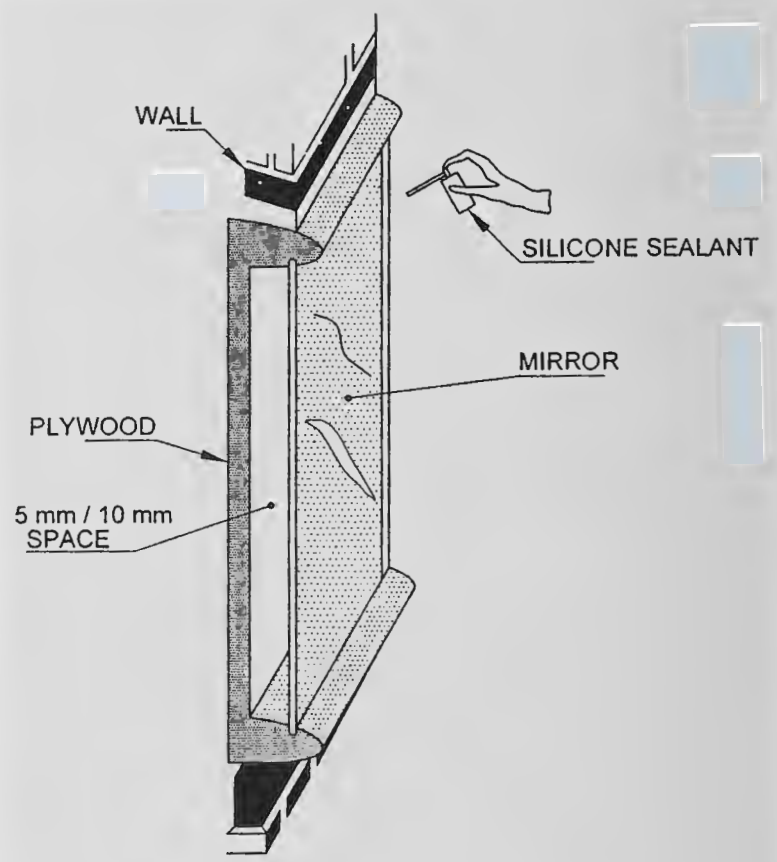

FIG. 19 INSTALLATION OF MIRRORS

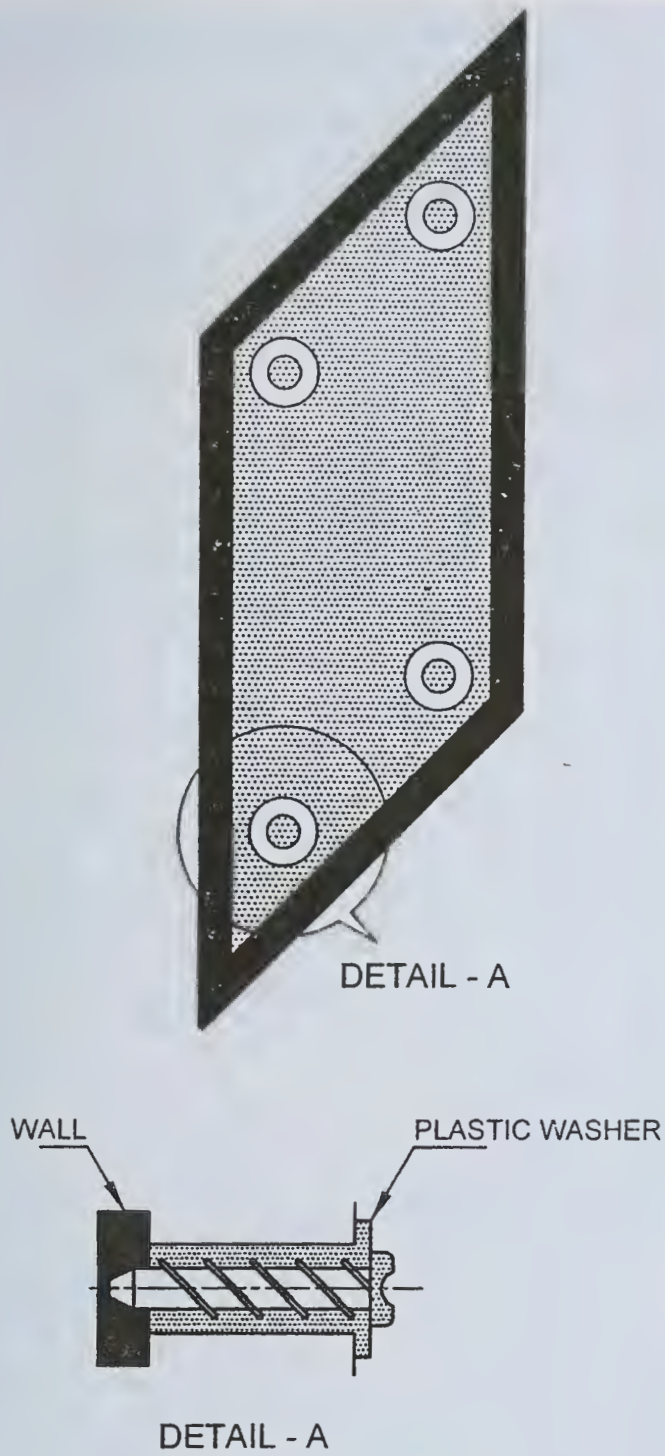

FIG. 20 DETAILS OF USE OF SCREWS AND INTERLEAVING WASHERS FOR INSTALLING MIRRORS

G-1.3 The adhesive used to mount mirrors, care should be taken to ensure that the adhesive is compatible with the protective coatings on the mirror. It is recommended to use only neutral binding agents such as alkoxy silicone, oxime silicone, etc. Avoid use of acid silicones, such as acetoxy silicones which contain acetic acid or water/rubber/polyurethane-based glues.

G-1.4 In the high humidity areas (for example bathrooms), it is recommended to seal the edges with neutral silicone to protect the backing paint from damage due to moisture and enhanced protection from moisture. It is recommended to use double sided adhesive tapes to fix the mirror on the mounting surface (*see* Fig. 21). The adhesive tapes used for installation shall be certified to be compatible with the mirror and the adhesive or the adhesive tapes shall always be fixed vertically.

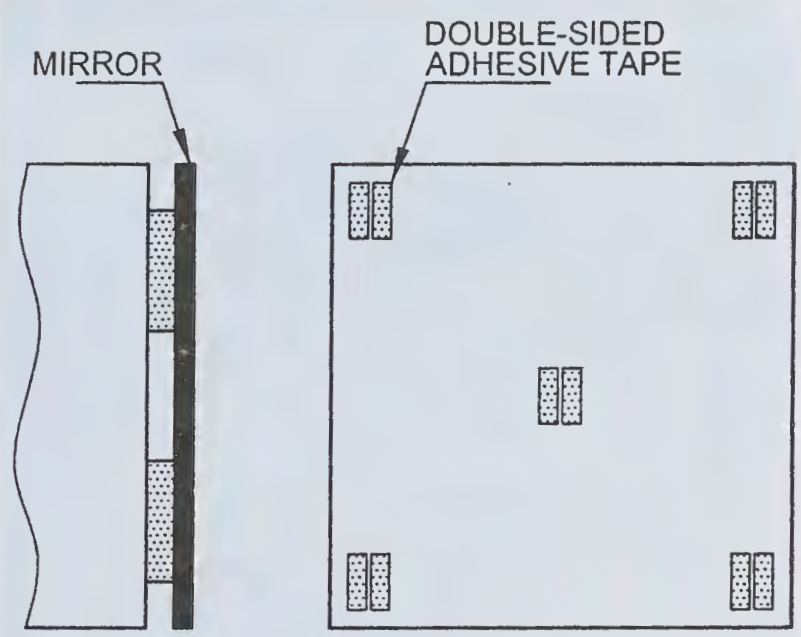

FIG. 21 DETAILS OF USE OF DOUBLE SIDED ADHESIVE TAPES FOR INSTALLING MIRRORS

ANNEX H

(Foreword)

GLASS RAILINGS

H-1 GENERAL

Glass railings are generally sought in commercial applications (such as in malls) and in certain domestic villas, etc. Glass of appropriate thickness when used as a railing can provide transparency and when engineered properly can provide structural performance too.

The basic requirement of a parapet which a glass railing (if so used) intends to substitute shall be met with. This includes protecting people from falling and in some cases to control movement. Careful consideration including in design shall be made where glass railings are used.

NOTE — Notwithstanding the above, the potential benefits including safety (through psychological aspects) of regular railings shall be borne in mind.

H-2 PRELIMINARY CONSIDERATIONS

In the assessment of the need for a railing and the type

of railing to be provided, the designer should give consideration to the likely hazards, the building use and the risks to building users. Where, in a building, more than one use of the building is anticipated, either the railing design should be chosen to suit the worst case, or more than one type of railing should be provided, as appropriate, to the location. Generally when there is a change in adjacent levels (600 mm in dwellings, 380 mm in other buildings) a railing is needed to restrict movement of people.

The railing adopted should be designed so as to minimise the risk of persons falling, rolling, sliding or slipping through gaps in the railing. In dwellings and other buildings which can be accessed by children, gaps in railing or infill should not be large enough to permit a sphere of 100 mm diameter to pass through, making due allowance for deflection under load.

The designer should ensure all the elements of the railing system satisfy the criteria given in available relevant standards.

For general safety, the finished barrier should have no sharp edges or projections that could cause injury to persons or clothing. Infill panels and balusters are intended to provide support and protection to users, and should be designed to restrain people without causing additional injury from sharp edges, thin sections, open-ended tubes, projecting details, etc.

The design shall be based on the horizontal UDL (uniformly distributed load) should be applied at a notional height of 1.1 m above finished floor level, even though the minimum permissible height of the railing may be less (The notional design height of 1.1 m is chosen as being representative of the height of the centre of gravity of a human being above the datum level).

H-3 GLASS RAILING TYPES

There are four common types of railing that used to fix glass.

a) *Full height railing* — Where glass forms part or whole of a wall element, the railing should be carefully designed as per the relevant existing standards and as per this Section, if any part of the glass comes below the minimum railing height (*see* Table 35).

b) *Railings with a glass infill panel* — In this type of railing, the main frame of the railing (that is, top rail and baluster) should be designed to withstand the loads applied to the top rail and the glass should be used to form infill panels. It should be noted that the glass provides no support to the main frame. This can be further sub-categorized into 4 types:

1) *Glass supported on vertical edges only* — This may involve the vertical edges of the glass being supported in a rebate into the side of each vertical post. The top and bottom edges of the glass are exposed. The glass may also be supported by patch fittings fixed to the posts. In all cases a handrail is required.

2) *Glass supported on horizontal edges only* — This may involve a handrail at the top, and a channel or a rail at the base of the glass. In this case the handrail should be designed to carry the railing load with the glass designed to carry the infill load.

3) Glass supported on all four edges.

4) *Glass fixed by patch/bolted fittings* — This system requires the use of two rows of bolts (commonly) to provide a stiff fixing which minimises panel deflection. There are a variety of bolt fixing types available in the market so design and performance information should be sought for each type. The purpose of these fixings is to transfer the force applied to the railing into the support structure. These fixings occupy a small surface area on the glass which can produce high stresses in the glass, so careful analysis is required to determine suitable glass thickness, fixing spacing and size.

c) *Free standing glass protective railing* — In this type of railing, the glass should be designed to withstand the design loads. Each glass plate should be rigidly clamped to the structure along its bottom edge, the handrail attached to the top edge of the glass and there should be no balusters. In the event that a free standing railing is supplied without a handrail, each panel should be able to withstand the entire appropriate design load. This applies to vertical glazing and glass within 15° of vertical. Adequate provision for drainage of water should be made in the base structure to avoid any water ponding which may cause delamination issue

d) *Bracket systems* — These systems are an extension of the bolt fixed system where the bolts are part of a bracket and the bracket is fixed to the floor or the face of a concrete slab, steel or timber structure. The use of these systems shall be investigated carefully as they can develop very high stresses in the glass where the brackets are located. The design shall balance glass thickness and bracket location to produce an adequate system. Some systems may be designed to produce test data,

to justify their use. This data shall be studied carefully as there have been some cases where such data has been shown to be inadequate. Proper interpretation of these test data shall also become necessary.

Table 35 Minimum Barrier Heights

[*Clause* H-3 (a)]

Sl No. (1)	Use (2)	Position (3)	Heights mm (4)
i)	Single family dwelling	a) Barriers in front of a window up to 10 floors	800
		b) Barriers in front of a window from 11th floor to 20th floor	1 100
		c) Barriers in front of a window above 21st floor	1 200
		d) Stairs, landings, ramps, edges of internal floors	900
		e) External balconies including *balconet*, edges of roofs:	
		1) up to 20th floor	1 100
		2) 21st floor and above	1 200
ii)	All other uses	a) Barrier in front of a window	800
		b) Stairs	900
		c) Balconies and stands, etc, having fixed seating within 530 mm of the barrier	800
		d) Balconies and stands, etc, having fixed seating within 530 mm of the barrier, provided the sum of the barrier width and the barrier height is greater than 975 mm	750
		e) Other positions including *balconets*	1 100

H-4 DESIGN CONSIDERATIONS

The designer shall first determine the purpose of the railing. Once this is done, the appropriate load requirement can be derived. Typical values (minimum requirements) of railing loads to be chosen are given in Table 36. (If so desired by the designer, higher values than that in the Table 36 may also be chosen.)

H-4.1 General

Railings should be designed to resist the most unfavourable likely imposed loads and wind loads separately without unacceptable deflections or distortions. Heights of railings shall be same as that for parapet walls as per other Parts of the Code. The railing height above datum is defined in Fig. 22. The minimum heights for each railing location shall be as given in Table 35.

The height of glass railings installed on top of low parapet walls should be measured from the top of the parapet and not at walk level.

For railings, either permissible stress or limit state design procedure should be used, according to the recommended procedures. When using limit state design, the partial safety factors for loads and materials should be those recommended by the appropriate standard for relevant materials. The deflection of the railing shall be determined as per serviceability limit state.

H-4.2 Loadings

Minimum horizontal imposed loads appropriate to the design of parapets, railings, balustrades and other

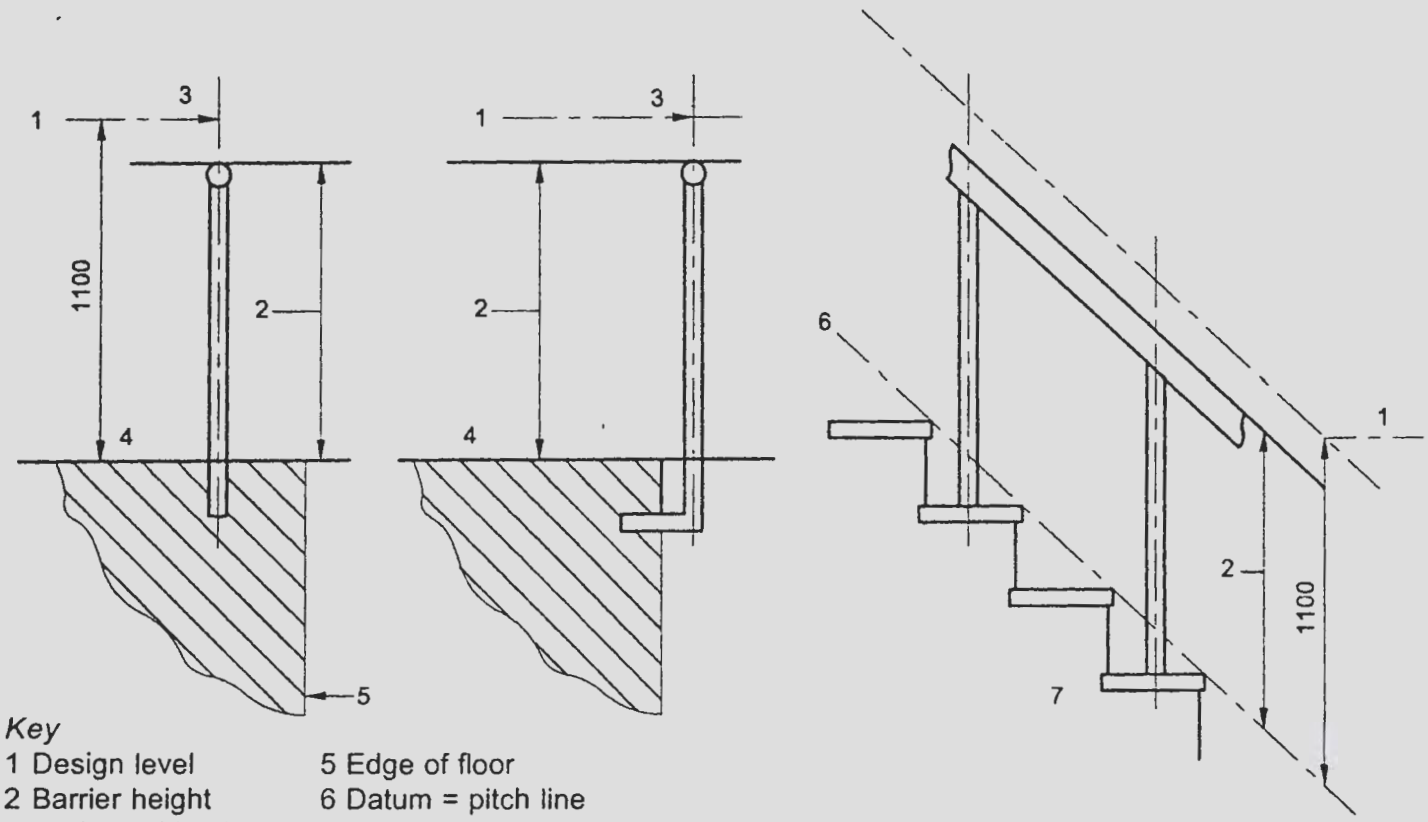

Key

1 Design level
2 Barrier height
3 Horizontal load
4 Datum = FFL
5 Edge of floor
6 Datum = pitch line
7 Stairs

NOTE — In design, the horizontal uniformly distributed line load acts at a height of 1.1 m above datum level, irrespective of the actual height of the element.

FIG. 22 DATUM, BARRIER HEIGHT AND DESIGN HEIGHT

elements of structure intended to retain, stop or guide people, should be determined in accordance with Table 36, which recommends a uniformly distributed line load for the railing and a uniformly distributed and point load applied to the infill.

NOTE — These are not additive and should be considered as three separate load cases, all loads being determined according to the type of occupancy which reflects the possible in-service conditions.

Horizontal uniformly distributed line load should be applied at design height as presented in Table 36 or at design level (1 100 mm) for railings higher than the design height.

Uniformly distributed load should be applied to the area below the design height.

Point load should be applied at the most onerous point anywhere on the railing structure.

NOTE — For clarity, the design level (the level at which the horizontal uniformly distributed line load ought to be considered to act) is shown in Fig. 23.

In general, the load combinations as described in **H-4.2.1** to **H-4.2.3** should be applied.

Building	Element		Strength	Height (H)
Single family dwelling	Stairs landings, ramps edges of internal floors	0.36 kN/m	900 mm for all elements	
	External balconies and edges of roofs	0.74 kN/m	1 100 mm	
Factories and warehouses (light traffic)	Stairs, ramps	0.36 kN/m	900 mm	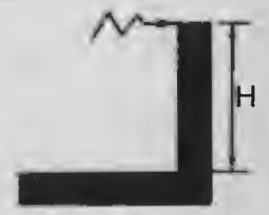
	Landing and edges of floor	0.36 kN/m	1 100 mm	
Residential institutional, educational, office and public building	All location	0.74 kN/m	900 mm for flights otherwise 1 100 mm	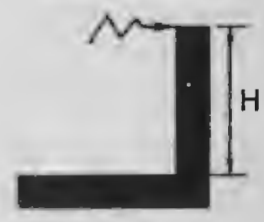
Assembly	Within 530 mm in front of fixed seating	1.5 kN/m	800 mm (H1)	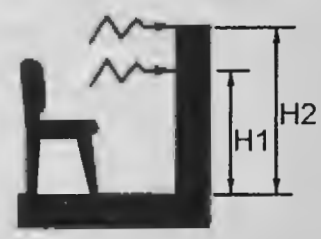
	All other locations	3.0 kN/m	900 mm for flights elsewhere 1 100 mm (H2)	
Retail	All locations	1.5 kN/m	900 mm for flights otherwise 1 100 mm	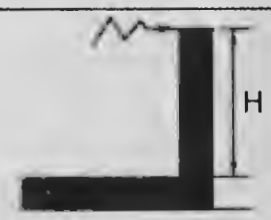
All buildings	At opening windows		800 mm	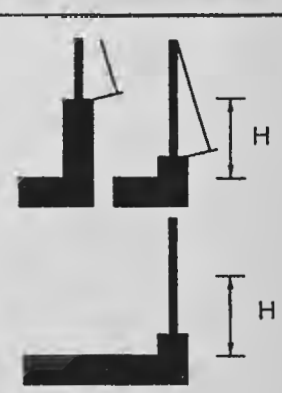
	At glazing to changes of level	To provide containment	Below 800 mm	

NOTE — *H* is the height at which the applied load (horizontal design load) is located and it need not be the height of the barrier itself.

FIG. 23 HEIGHT LIMIT FOR THE UNIFORM LOADING FOR VARIOUS CATEGORY OF BUILDINGS

Table 36 Minimum Horizontal Imposed Loads for Parapets, Barriers and Balustrades

(*Clauses* H-4.2 *and* H-4.4)

Sl No.	Type of Occupancy for Part of the Building or Structure	Examples of Specific Use	Horizontal Uniformly Distributed Line Load kN/m	Uniformly Distributed Load Applied to the Infill kN/m²	A Point Load Applied to Part of the Infill kN
(1)	(2)	(3)	(4)	(5)	(6)
i)	Domestic and residential activities	a) All areas within or serving exclusively one single family dwelling including stairs, landings, etc, but excluding external balconies and edges of roofs	0.36	0.5	0.25
		b) Other residential, that is, houses of multiple occupancy and balconies, including Juliette balconies and edges of roofs in single family dwellings	0.74	1.0	0.5
ii)	Offices and work areas not included elsewhere, including storage areas	a) Light access stairs and gangways not more than 600 mm wide	0.22	—	—
		b) Light pedestrian traffic routes in industrial and storage buildings except designated escape routes	0.36	0.5	0.25
		c) Area not susceptible to overcrowding in office and institutional buildings, also industrial and storage buildings except as given above	0.74	1.0	0.5
iii)	Areas where people might congregate	Areas having fixed seating within 530 mm of the barrier, balustrade or parapet	1.5	1.5	1.5
iv)	Area with tables or fixed seatings	Restaurants and bars	1.5	1.5	1.5
v)	Areas without obstacles for moving people and not susceptible to overcrowding	a) Stairs, landings, corridors, ramps	0.74	1.0	0.5
		b) External balconies including *balconets* and edges of roofs. Footways and pavements within building curtilage adjacent to basement/sunken areas	0.74	1.0	0.5
vi)	Areas susceptible to overcrowding	a) Footways or pavements less than 3 m wide adjacent to sunken areas	1.5	1.5	1.5
		b) Theatres, cinemas, discotheques, bars, auditoria, shopping malls, assembly areas, studio. Footways or pavements greater than 3 m wide adjacent to sunken areas.	3.0	1.5	1.5
vii)	Retail areas	All retail areas including public areas of banks/building societies or betting shops	1.5	1.5	1.5
viii)	Vehicular	Pedestrian areas in car parks, including stairs, landings, ramps, edges or internal floors, footways, edges of roofs	1.5	1.5	1.5

H-4.2.1 *Free Standing Glass Protective Railing (Without any Balusters)*

It requires five design loadings to be taken into account:

a) Line load (Horizontal UDL), in kN/m
b) UDL (Infill UDL), in kN/m².
c) Concentrated load, in kN.
d) Impact force.
e) Shot bag test load (*see* Annex E).

H-4.2.2 *Railing with Glass Infill Panel*

It requires three design loadings to be taken into account:

a) UDL (Infill UDL), in kN/m².
b) Concentrated load, in kN.
c) Impact force, in kN.

H-4.2.3 *Full Height Railing*

It requires three design loadings to be taken into account:

a) Line load (Horizontal UDL), in kN/m.
b) UDL (Infill UDL). in kN/m².
c) Concentrated load, in kN.

H-4.3 Wind Loads

External railings should be designed to resist the wind loads given in good practice [8-5(7)].

H-4.4 Deflection

Railings for the protection of people should be of adequate strength and stiffness to sustain the applied loads given in Table 36. In addition, a railing that is structurally safe should not possess flexibility to such an extent so as to create a false alarm to building users when subject to normal service conditions. Therefore, for serviceability considerations, the limiting condition for deflection appropriate for a railing for the protection of people is that the total horizontal displacement of the railing at any point from its original unloaded position and should not exceed the deflection limits determined from the relevant structural design code (where applicable) for the material used, or 25 mm, whichever is the smaller. Where the infill of a railing is subjected to the imposed loads given in Table 36, or if appropriate, other calculated design loads, the displacement of any point of the railing should not exceed H/65 or 25 mm, whichever is lower.

H-4.5 Fixings, Attachments and Anchorage

The strength of fixings, attachments and anchorage securing the railing to a substrate should be adequate to sustain a loading greater than that to which the railing will be subjected. All joints should be designed to provide the full strength of the members being joined. To that end, where any uncertainty exists with regard to the strength of any component in the fixing, the design loading factors should be increased by 50 percent.

While designing fixings, particular care should be taken to account for the material into which the fixing is placed, the spacing between fixings, the edge distance, and where the substrate is concrete, the position of reinforcement. Designs based on the pull out capacity of a single fixing should be avoided.

NOTES

1 The recommendation of an additional load factor of 1.5 is intended to ensure that under an extreme load condition, railings give an indication of failure by deflection distortion and not by total collapse, as may be brought about by a failure of the fixing, attachment or anchorage system. Where the design strength of a proposed system of fixing to an existing substrate cannot be determined with reasonable accuracy by theoretical consideration, load testing should be used to validate the design.

2 A factor greater than 1.5 on railing load design might also be chosen based on the importance desired by the designer/parties concerned.

H-4.6 Testing

The standard tests, performance criteria of glass in permanent glass railing systems, guards and balustrades shall be mutually decided between the parties concerned.

H-5 GLASS

The use of glass in railings, the type and thickness of glass required for various support conditions shall be as given below. If designed properly, glass can form a structural component of the railing, or the railing may be designed to have a structural component made from another material such as steel or aluminium, with glass acting as an infill panel only. This places a lesser load on the glass as the major load is taken by the structural component.

NOTE — There are certain situations, particularly under some lighting conditions, where the presence of transparent glass is not readily evident and suitable manifestation should be provided.

H-5.1 Types of Glass

For the purpose of this annex, safety glass used in railing shall be any of the following:

a) Laminated glass,

b) Heat strengthened laminated glass, and

c) Toughened laminated glass.

The designer shall ensure that in the case of accidental or deliberate damage, there is no glass fallout to rule out any kind of danger to public. In these situations, it is recommended to use a toughened laminated glass or fully framed laminated glass. Exposed edges of laminated glass are not recommended unless it is with a non-hygroscopic layer.

It is recommended that all monolithic toughened glass used in frameless or bolted structural railings be specified as heat soak treated.

The type of glass should be chosen to suit the design of the railing. For the use of laminated glass, where the glass is not fully framed, the manufacturer should be consulted. Toughened glass and laminated toughened glass should be used for all railings where the glass is fully or partially framed or is free standing. The selection of glass should include consideration of the post breakage behaviour.

NOTES

1 Laminated safety glass can be used for all railings, where the glass is used, fully framed.

2 Monolithic toughened glass might fall from its retention system if broken in free-standing and infill railings. In such cases, additional protection shall be required if this type of glass is used above areas of fixed seating.

H-5.2 Working of Glass

The size, position and shape of holes and notches in toughened glass, and the production of shapes other than rectangles, should be decided in consultation with

the manufacturer, as shaping, drilling, cutting, etc, should be undertaken prior to toughening.

H-5.3 Fixing of Glass

Contact between glass and any other hard material (including other glass parts) should be prevented. Rubber gaskets or other glazing materials should be used with frame sections. The frame section should give a minimum of 15 mm edge cover to the glass unless it can be shown by test or calculation that the frame will retain the glass under load while conforming to design requirements.

The frame and/or fastenings should be designed so that they do not tend to distort the glass panel. This is particularly important with bolted connections, which can exert considerable forces on the glass, where particular attention should be paid to the alignment and position of the fasteners in order to avoid unnecessary stresses being developed.

H-5.3.1 *Bolt Fixing of Infill Panels*

At the bolted connections there should be clamping plates and gaskets on both sides of the glass that provide a minimum of 50 mm diameter cover to the glass. These plates should be not less than 6 mm thick in steel or 10 mm thick in other suitable metals.

Where the length of a glass pane is greater than the span between the bolted connectors, giving rise to a cantilevered portion of the pane, the cantilevered portion should be less than one-quarter of the span between the bolted connectors.

Under the design loads, the railing should be designed so that the relative in plane movement of the bolted connections in the same panel is not greater than 2 mm.

The glass, framing system and connections of railings and infill panels should be capable of sustaining and safely transmitting the design loads to the supporting structure.

H-5.4 Design of Glass

H-5.4.1 *Design of Glass in Full Height Protective Railings*

Glass partly or totally below the minimum railing height should be designed to satisfy the appropriate design criteria. Any part of a glass pane below the minimum railing height should sustain the infill loads. Where there is glass at the minimum railing height given in Table 36, the glass should also sustain the line load applied at the design level.

For any specific information on the glass size relative to the glass type, support system, loadings and thickness, available standards or the manufacturer recommendations should be sought.

H-5.4.2 *Design of Glass Infill Panels*

Infill panels should be designed to satisfy the appropriate design criteria as below:

a) *Fully framed infill panels* — The deflection of the glass in fully framed infill panels should be as per recommended deflections.

b) *Two-edge framed infill panels* — The deflection of the glass in two edge framed infill panels should be as recommended under **H-4.4** taking L as the distance between the supports.

c) *Clipped infill panels* — The clips should be positioned around the periphery of the infill panel, at a maximum spacing of 600 mm. Each clip should be not less than 50 mm in length and should give a minimum depth of cover to the glass of 25 mm.

d) *Bolt fixing of glass infill panels* — Where glass is supported by bolted connections through holes in the glass, toughened/ toughened laminated glass should be used.

e) *Position of infill panels relative to the main frame* — Infill panels should be fully contained within the supporting structure. In order not to apply unintended loads to the infill panels, they should have handrails above the glass or attached to the side to which the public have access.

H-5.4.3 *Design of Free Standing Glass Protective Railings*

The glass should be designed to satisfy the appropriate design criteria given in **H-4**. The deflection of the glass should not be more than 25 mm at any point.

H-5.4.3.1 *Handrail attachment*

Where the railing protects a difference in level greater than 600 mm, a handrail shall be used unless a laminated toughened glass construction is used that remains *in-situ*, if a panel fails. Continuous fixing should be used for fixing the handrail to the glass, or individual fixings where calculations or tests demonstrate that component failure will not occur.

Where handrail is not desired, the laminated toughened glass should have a stiff interlayer such as ionoplast interlayer or structural PVB interlayer.

The handrail should be attached to the glass in such a manner that, should a glass panel gets fractured, the handrail.

a) will remain in position; and

b) will not fail if the design load is applied across the resulting gap.

NOTE — The above condition (b) can be relaxed where the glass pane is an end pane and protects a difference in level of 600 mm or less, for example at the foot of a flight of stairs. In cases where an end pane protects a difference in level greater than 600 mm, there may normally be some adjacent structure to which the handrail could be attached, thus enabling it to meet condition (b).

H-5.4.4 *Base Fixing of Free Standing Railings*

H-5.4.4.1 *Point of fixing clamps*

The fixing clamps on each side of the glass should be not less than 100 mm to 150 mm and should be made of a suitable metal of minimum thickness 12 mm. There should be not less than two fixing clamps for every 1 m length of railing.

H-5.4.4.2 *Continuous fixing clamps*

The fixing clamps on each side of the glass should be not less than 100 mm wide and should be made of a suitable metal of minimum thickness 12 mm. The clamps should be continuous for the entire length of the glass pane and have a maximum bolt spacing of 500 mm.

H-5.4.4.3 *Other clamping systems*

Different clamping methods could be used, provided they cater for an effective continuous clamping over the length of the glass pane. Where a clamping system that does not rely on bolts through the glass is used, the depth over which the clamping force operates should be not less than 75 mm, unless specific tests have been carried out to prove the integrity of the system and that it meets the design criteria given.

H-5.4.4.5 *Structural movement*

The structural movement due to live or dead loads or creep of the structure to which a railing pane is clamped should be not greater than 2 mm over the length of any railing panel, if more than two bolts are used to clamp that panel.

H-5.4.4.6 *Fixing clamps*

The attachment of the fixing clamps to the structure should be capable of withstanding the turning moment induced at the fixing clamps.

H-6 IMPACT RESISTANCE AND CONTAINMENT

H-6.1 General

In addition to resisting the design loads given, glass below the minimum railing height (*see* Table 1) should also be able to resist impact forces appropriate to whether the railing indicates a route or protects people from a hazard.

H-6.2 Glass in Full Height Railings

The glass in full height railings should be selected to resist the appropriate design loads given and for its impact performance in accordance with the safety glazing recommendations.

H-6.3 Railing with Glass In-Fills or Free-Standing Balustrades

The glass in railings with glass in-fills or free-standing should be selected to resist the appropriate design loads given, and to provide containment, that is, it should meet the recommended impact class without penetration.

H-7 INSTALLATION

The installation of a railing should be supervised by a suitably qualified person or persons, who should ensure that the design assumptions have been effectively implemented. Inspections and investigations should be carried out as necessary to establish the integrity of the materials and the elements of construction used.

H-7.1 Fasteners and Fittings

Fasteners and fittings should be of stainless steel, or should be hot-dip galvanized. Thin zinc plated or cadmium plated coatings should not be used for external exposure without additional protection.

H-8 MAINTENANCE

All glass should be regularly cleaned and fixings should be checked for corrosion and loosening. Maintenance recommendations, and the frequency with which railings should be inspected, are governed by environment, usage, incidence of malicious damage and the protection applied. Protective railings assembled entirely from metal-coated steel and situated in normal environments should not require any maintenance for a very long period. They should, however, be inspected regularly and the residual coating thickness should be measured.

LIST OF STANDARDS

The following list records those standards which are acceptable as 'good practice' and 'accepted standards' in the fulfillment of the requirements of the code. The latest version of a standard shall be adopted at the time of enforcement of the code. The standards listed may be used by the Authority for conformance with the requirements of the referred clauses in the Code.

In the following list, the number appearing in the first column within parantheses indicates the number of the reference in this Section:

	IS No.	*Title*
(1)	14900 : 2000	Specification for transparent float glass
	2553 (Part 1) : 1990	Specification for safety glass: Part 1 General purpose (*third revision*)
(2)	3808 : 1979	Method of test for non-combustibility of building materials (*first revision*)
(3)	2835 : 1987	Specification for flat transparent sheet glass (*third revision*)
(4)	14900 : 2000	Specification for Transparent float glass
(5)	2553 (Part 1) : 1990	Specification for safety glass: Part 1 General purpose (*third revision*)
(6)	5437 : 1994	Specification for figured rolled and wired glass (*first revision*)
(7)	875 (Part 3) : 2015	Code of Practice for design loads (other than earthquake) for buildings and structures: Part 3 Wind Loads (*third revision*)
(8)	1893 (Part 1) : 2016	Criteria for earthquake resistant design of structures: Part 1 General provisions and buildings (*sixth revision*)
(9)	875 (Part 2) : 1987	Code of Practice for design loads (other than earthquake) for buildings and structures: Part 2 Imposed loads
(10)	3809 : 1979	Fire resistance test for structures (*first revision*)
(11)	875	Code of Practice for design loads (other than earthquake) for buildings and structures
	(Part 1) : 1987	Dead loads — Unit weights of building material and stored materials (*second revision*)
	(Part 2) : 1987	Imposed loads (*second revision*)
	(Part 3) : 2015	Wind loads (*third revision*)
	(Part 5) : 1987	Special loads and combinations (*second revision*)
(12)	733 : 1983	Specification for wrought aluminium and aluminium alloy bars, rods and sections (for general engineering purposes) (*third revision*)
	738 : 1994	Specification for wrought aluminium alloys, drawn tube for general engineering purposes (*third revision*)
(13)	6911 : 1992	Specification for stainless steel plate, sheet and strip (*first revision*)

(Continued from flap 1)

Since the publication of first version of the National Building Code of India in 1970, a large number of comments and useful suggestions for modifications and additions to different Parts and Sections of the Code were received as a result of use of the Code by all concerned, and revision work of building byelaws of some states based on the Code. Based on these and in view of revision of existing Indian Standards and formulation of new Indian Standards in the field of building activity, the National Building Code of India, 1970 was first revised in 1983 and then in 2005. In between, some amendments were also issued to the Code.

Due to large scale changes in the building construction activities, such as change in nature of occupancies with prevalence of high rises and mixed occupancies, greater dependence and complicated nature of building services, development of new/innovative construction materials and technologies, greater need for preservation of environment and recognition of need for planned management of existing buildings and built environment, there has been a paradigm shift in building construction scenario. Apart from addressing all these aspects, it was required to reflect the changes incorporated in various standards which are considerably utilized in the Code. All these have led to this third revision of the National Building Code of India.

The Code now published is the fourth version representing the present state of knowledge on various aspects of building construction. The process of preparation of the Code has thrown up a number of problems; some of them were answered fully and some partially. Therefore, a continuous programme will go on by which additional knowledge that is gained through technological evolution, users' views over a period of time pinpointing areas of clarification and coverage and results of research in the field, would be incorporated in to the Code from time to time to make it a living document. It is, therefore, proposed to bring out changes to the Code periodically.

BUREAU OF INDIAN STANDARDS
Manak Bhavan, 9 Bahadur Shah Zafar Marg, New Delhi 110 002
www.bis.gov.in